Cisco TelePresence Video Communication Server

Administrator Guide

Software version: X8.2

November 2014

Contents

Introduction **11**

About the Cisco TelePresence Video Communication Server (VCS) 12
- VCS base applications 13
- Standard features 13
- Optional features 14
- Appliance and virtual machine options 16

About this guide 17
- Related documentation 17
- Training 17
- Glossary 17
- Accessibility notice 17
- Using the web interface 18
- Using the command line interface (CLI) 19
- Web page features and layout 20

What's new in this version? 22

Network and system settings **24**

Network settings 25
- Configuring IP settings 25
- Configuring Ethernet settings 27
- Configuring DNS settings 27
- Configuring Quality of Service settings 29

Intrusion protection 30
- Configuring firewall rules 30
- Current active firewall rules 32
- Configuring automated intrusion protection 32

Network services 36
- Configuring system name and access settings 36
- Configuring SNMP settings 39
- Configuring time settings 41
- Configuring the Login page 43

Configuring external manager settings 44

Configuring TMS Provisioning Extension services 45

Firewall traversal **48**

About firewall traversal 49
- The Expressway solution 49
- How does it work? 49
- Endpoint traversal technology requirements 50
- H.323 firewall traversal protocols 50
- SIP firewall traversal protocols 50
- Media demultiplexing 50
- Firewall traversal configuration overview 52

Configuring a traversal client and server 54

Configuring ports for firewall traversal 55
- Configuring the firewall 55
- Configuring traversal server ports 55
- Configuring ports for connections from traversal clients 56

Firewall traversal and authentication 59

Authentication and NTP 59
Configuring Expressway and traversal endpoint communications 60
About ICE and TURN services 61
About ICE 61
About TURN 61
Configuring TURN services 62
Unified Communications 65
Mobile and remote access 66
Mobile and remote access overview 66
Configuring mobile and remote access on VCS 67
Mobile and remote access port reference 72
External XMPP federation 75
Deploying VCS for external XMPP federation 75
Configuring VCS for external XMPP federation 76
DNS SRV records for XMPP federation 80
Port usage for XMPP federation 81
Checking XMPP federation status 82
Troubleshooting external XMPP federation 82
Cisco Jabber Guest 86
Jabber Guest services overview 86
Jabber Guest signaling and media flows in single-NIC deployment 86
Jabber Guest licensing and call capacity 89
Configuring Jabber Guest services on VCS 89
Configuring your firewall for Jabber Guest traffic 93
Troubleshooting Jabber Guest services on VCS 95
Configuring a secure traversal zone connection for Unified Communications 96
Installing VCS security certificates 96
Configuring encrypted VCS traversal zones 97
Server certificate requirements for Unified Communications 99
Protocols 102
About H.323 103
Using the VCS as an H.323 gatekeeper 103
H.323 endpoint registration 103
Configuring H.323 104
About SIP 106
VCS as a SIP registrar 106
VCS as a SIP proxy server 107
Proxying registration requests 108
VCS as a SIP Presence Server 108
Configuring SIP 109
SIP functionality and SIP-specific transport modes and ports 109
Certificate revocation checking modes 110
Registration controls 110
Authentication controls 112
Configuring domains 113
Configuring the supported services for Unified Communications (VCS Control only) 113
Configuring delegated credential checking (VCS Expressway only) 113
Configuring SIP and H.323 interworking 115
Registration control 117

About registrations ... 118
Finding a VCS with which to register ... 118
Registrations on a VCS Expressway ... 118
MCU, gateway and Content Server registration ... 119
Configuring registration restriction policy ... 119
Registering aliases ... 119
About Allow and Deny Lists ... 122
Configuring the registration Allow List ... 122
Configuring the registration Deny List ... 123
Configuring Registration Policy to use an external service ... 124

Device authentication ... 126

About device authentication ... 127
Configuring VCS authentication policy ... 128
Controlling system behavior for authenticated and non-authenticated devices ... 129
Authentication policy configuration options ... 130
SIP authentication trust ... 133
Configuring delegated credential checking (SIP only) ... 134
Device provisioning and authentication policy ... 137
Presence and authentication policy ... 139
Hierarchical dial plans and authentication policy ... 140
Practical configuration of authentication policy ... 141
Configuring VCS authentication methods ... 141
Configuring authentication to use the local database ... 144
Using an H.350 directory service lookup via LDAP ... 145
Using Active Directory database (direct) ... 148
Configuring the connection to Active Directory Service (ADS) ... 149
Authenticating with external systems ... 154

Zones and neighbors ... 155

About your video communications network ... 156
Structuring your dial plan ... 157
Flat dial plan ... 157
Structured dial plan ... 157
Hierarchical dial plan ... 157
About zones ... 159
Configuring media encryption policy ... 160
Configuring the B2BUA for media encryption ... 160
Configuring ICE messaging support ... 161
About the Local Zone and subzones ... 162
The Default Zone ... 163
Configuring the Default Zone ... 163
Configuring Default Zone access rules ... 164
Configuring zones ... 165
Configuring neighbor zones ... 165
Configuring traversal client zones ... 168
Configuring traversal server zones ... 170
Configuring ENUM zones ... 173
Configuring DNS zones ... 174
Zone configuration: advanced settings ... 175
Zone configuration: pre-configured profile settings ... 178
TLS certificate verification of neighbor systems ... 179

Configuring a zone for incoming calls only ... 180

Clustering and peers ... 181

About clusters ... 182
License usage within a cluster ... 184
Managing clusters and peers ... 186
Setting up a cluster ... 186
Maintaining a cluster ... 187
Specifying peer-specific items in clustered systems ... 188
Sharing registrations across peers ... 190
Sharing bandwidth across peers ... 190
Cluster upgrades, backup and restore ... 191
Clustering and Presence ... 191
Clustering and Cisco TMS ... 191
About the Cluster Subzone ... 192
Neighboring the local VCS to another VCS cluster ... 193
Troubleshooting cluster replication problems ... 194

Dial plan and call processing ... 195

Call routing process ... 196
Configuring hop counts ... 198
Configuring dial plan settings ... 199
About the fallback alias ... 199
About transforms and search rules ... 200
About pre-search transforms ... 200
Configuring pre-search transforms ... 201
Search and zone transform process ... 202
Configuring search rules ... 203
Example searches and transforms ... 206
Filter queries to a zone without transforming ... 206
Always query a zone with original alias (no transforms) ... 207
Query a zone for a transformed alias ... 207
Query a zone for original and transformed alias ... 208
Query a zone for two or more transformed aliases ... 209
Stripping @domain for dialing to H.323 numbers ... 210
Transforms for alphanumeric H.323 ID dial strings ... 212
Allowing calls to IP addresses only if they come from known zones ... 214
Configuring search rules to use an external service ... 215
About Call Policy ... 218
Configuring Call Policy ... 218
Configuring Call Policy rules using the web interface ... 219
Configuring Call Policy using a CPL script ... 219
Configuring Call Policy to use an external service ... 221
Supported address formats ... 223
Dialing by IP address ... 223
Dialing by H.323 ID or E.164 alias ... 223
Dialing by H.323 or SIP URI ... 223
Dialing by ENUM ... 224
Dialing by IP address ... 225
About URI dialing ... 227
URI dialing without DNS ... 227
URI dialing via DNS ... 228

URI resolution process using DNS ... 228
URI dialing via DNS for outgoing calls ... 229
URI dialing via DNS for incoming calls ... 231
URI dialing and firewall traversal ... 233
About ENUM dialing ... 235
ENUM dialing process ... 235
Enabling ENUM dialing ... 235
ENUM dialing for outgoing calls ... 236
Configuring zones and search rules for ENUM dialing ... 237
ENUM dialing for incoming calls ... 239
Configuring DNS servers for ENUM and URI dialing ... 241
Configuring call routing and signaling ... 242
Identifying calls ... 243
Disconnecting calls ... 244
Bandwidth control ... 245
About bandwidth control ... 246
Configuring bandwidth controls ... 247
About downspeeding ... 247
About subzones ... 248
About the Traversal Subzone ... 248
Configuring the Default Subzone ... 249
Configuring subzones ... 249
Configuring subzone membership rules ... 250
Applying bandwidth limitations to subzones ... 252
Links and pipes ... 254
Configuring links ... 254
Default links ... 254
Configuring pipes ... 255
Applying pipes to links ... 256
Bandwidth control examples ... 257
Applications ... 259
Configuring Conference Factory ... 260
Presence ... 262
Presence Server ... 262
Presence User Agent (PUA) ... 263
Configuring Presence ... 264
B2BUA (back-to-back user agent) overview ... 267
Configuring B2BUA TURN servers ... 267
Microsoft Lync B2BUA ... 268
FindMe™ ... 275
End-user FindMe account configuration ... 275
How are devices specified? ... 275
FindMe process overview ... 276
Recommendations when deploying FindMe ... 276
Configuring FindMe ... 276
Cisco TMS provisioning ... 279
VCS Provisioning Server ... 280
Starter Pack provisioning ... 282
Configuring Starter Pack provisioning ... 282

User accounts **283**
About user accounts 284
Account authentication 284
Account types 284
Configuring password security 286
Configuring administrator accounts 287
Viewing active administrator sessions 288
Login history 288
Configuring remote account authentication using LDAP 289
Checking the LDAP server connection status 291
Configuring administrator groups 292
Configuring FindMe groups 294
Configuring FindMe accounts 295
Configuring a FindMe account's principal devices 297
Active FindMe sessions 297
Resetting forgotten passwords 298
Resetting your root or admin password via a serial connection 298
Resetting FindMe account passwords 298
Using the root account 299
Changing the root account password 299
Accessing the root account over SSH 299
Maintenance **300**
Enabling maintenance mode 301
About upgrading software components 302
Upgrading VCS software 303
Upgrading using secure copy (SCP/PSCP) 304
Configuring logging 305
Event Log levels 305
Remote logging of events 305
Managing option keys 307
About security certificates 309
Managing the trusted CA certificate list 309
Managing the VCS's server certificate 310
Managing certificate revocation lists (CRLs) 313
Configuring certificate-based authentication 315
Testing client certificates 317
Advanced security 320
Configuring advanced account security mode 320
Configuring FIPS140-2 cryptographic mode 321
Configuring language settings 324
Changing the language 324
Installing language packs 324
Removing language packs 325
Backing up and restoring VCS data 326
When to create a backup 326
Content of the backup file 326
Limitations 326
Creating a system backup 326
Restoring a previous backup 327
Diagnostics tools 328

Configuring diagnostic logging ... 328
Creating a system snapshot ... 329
Configuring Network Log levels ... 330
Configuring Support Log levels ... 330
Incident reporting ... 331
Incident reporting caution: privacy-protected personal data ... 331
Enabling automatic incident reporting ... 331
Sending incident reports manually ... 332
Viewing incident reports ... 332
Incident report details ... 333
Checking the effect of a pattern ... 334
Locating an alias ... 335
Port usage ... 336
Local inbound ports ... 336
Local outbound ports ... 336
Remote listening ports ... 337
Network utilities ... 338
Ping ... 338
Traceroute ... 338
Tracepath ... 339
DNS lookup ... 339
Restarting, rebooting and shutting down ... 342
Developer resources ... 344
Debugging and system administration tools ... 344
Experimental menu ... 344
Overview and status information ... 345
Status overview ... 346
System information ... 348
Ethernet status ... 349
IP status ... 350
Resource usage ... 351
Registration status ... 353
Call status ... 355
Disconnecting calls ... 356
B2BUA calls ... 357
Viewing B2BUA call media details ... 357
Search history ... 358
Search details ... 359
Local Zone status ... 360
Zone status ... 361
Bandwidth ... 362
Link status ... 362
Pipe status ... 362
Policy server status and resiliency ... 363
Viewing policy server status via the VCS ... 363
TURN relay usage ... 364
TURN relay summary ... 364
Unified Communications status ... 365
Presence ... 366
Presence publishers ... 366
Presence presentities ... 366

Presence subscribers ... 367
Lync B2BUA ... 368
Lync user status ... 368
Lync B2BUA status ... 368
TMS Provisioning Extension service status ... 369
Provisioning Server device requests status (Cisco TMSPE) ... 369
User records provided by Cisco TMSPE services ... 370
FindMe records provided by Cisco TMSPE services ... 371
Phone book records provided by Cisco TMSPE services ... 371
Provisioned devices ... 372
Checking provisioned data ... 372
Starter Pack Provisioning Server status ... 373
Managing alarms ... 374
Logs ... 375
Event Log ... 375
Configuration Log ... 376
Network Log ... 377
Hardware status ... 379
Reference material ... 380
Performance capabilities ... 381
About Event Log levels ... 382
Event Log format ... 382
Administrator and FindMe user events ... 383
Message details field ... 383
Events and levels ... 385
CPL reference ... 391
CPL address-switch node ... 391
otherwise ... 393
not-present ... 393
location ... 393
rule-switch ... 394
proxy ... 395
reject ... 395
Unsupported CPL elements ... 395
CPL examples ... 396
LDAP server configuration for device authentication ... 402
Downloading the H.350 schemas ... 402
Configuring a Microsoft Active Directory LDAP server ... 402
Configuring an OpenLDAP server ... 404
DNS configuration examples ... 408
Verifying the SRV record ... 408
Microsoft DNS server ... 408
BIND 8 & 9 ... 408
Changing the default SSH key ... 410
Restoring default configuration (factory reset) ... 411
Prerequisite files ... 411
Performing a reset to default configuration ... 411
Resetting via USB stick ... 412
Password encryption ... 413
Pattern matching variables ... 414
Port reference ... 416

Local VCS inbound/outbound ports ... 416
Remote listening ports ... 420
Mobile and remote access port reference ... 422
Microsoft Lync B2BUA port reference ... 424
Device authentication port reference ... 426
H.350 directory service ... 426
Active Directory (direct) ... 426
Regular expressions ... 427
Supported characters ... 429
Call types and licensing ... 430
Call types ... 430
What are traversal calls? ... 430
Alarms ... 432
Command reference — xConfiguration ... 449
Command reference — xCommand ... 496
Command reference — xStatus ... 515
External policy overview ... 517
Using an external policy server ... 517
External policy request parameters ... 518
Default CPL for policy services ... 519
Flash status word reference table ... 520
Supported RFCs ... 521
Software version history ... 523
X8.2 ... 523
X8.1.1 ... 525
X8.1 ... 525
X7.2.1 ... 530
X7.2 ... 530
X7.1 ... 533
X7 ... 534
Related documentation ... 538
Legal notices ... 540
Intellectual property rights ... 540
Copyright notice ... 540
Patent information ... 541

Introduction

This section provides an overview of the Cisco TelePresence Video Communication Server.

About the Cisco TelePresence Video Communication Server (VCS) 12
About this guide 17
What's new in this version? 22

About the Cisco TelePresence Video Communication Server (VCS)

The Cisco TelePresence Video Communication Server (VCS) software simplifies session management and control of telepresence conferences. It provides flexible and extensible conferencing applications, enabling organizations to benefit from increased employee productivity and enhanced communication with partners and customers.

The VCS delivers exceptional scalability and resiliency, secure communications, and simplified large-scale provisioning and network administration in conjunction with Cisco TelePresence Management Suite (Cisco TMS).

The VCS interworks transparently with Cisco Unified Communications Manager (Unified CM), bringing rich telepresence services to organizations with Unified CM. It also offers interoperability with third-party unified communications, IP telephony networks, and voice-over-IP (VoIP) systems.

The VCS supports on-premises and cloud applications and is available as a dedicated appliance or as a virtualized application on VMware, with additional support for Cisco Unified Computing System (Cisco UCS) platforms.

You can deploy the VCS as the VCS Control for use within an enterprise and as the VCS Expressway for business-to-business and remote and mobile worker external communication. An alternative solution, suited to small to medium-sized businesses (SMBs), is the VCS Starter Pack Express.

Optional packages that you can deploy include FindMe, Device Provisioning, and Advanced Networking (VCS Expressway only).

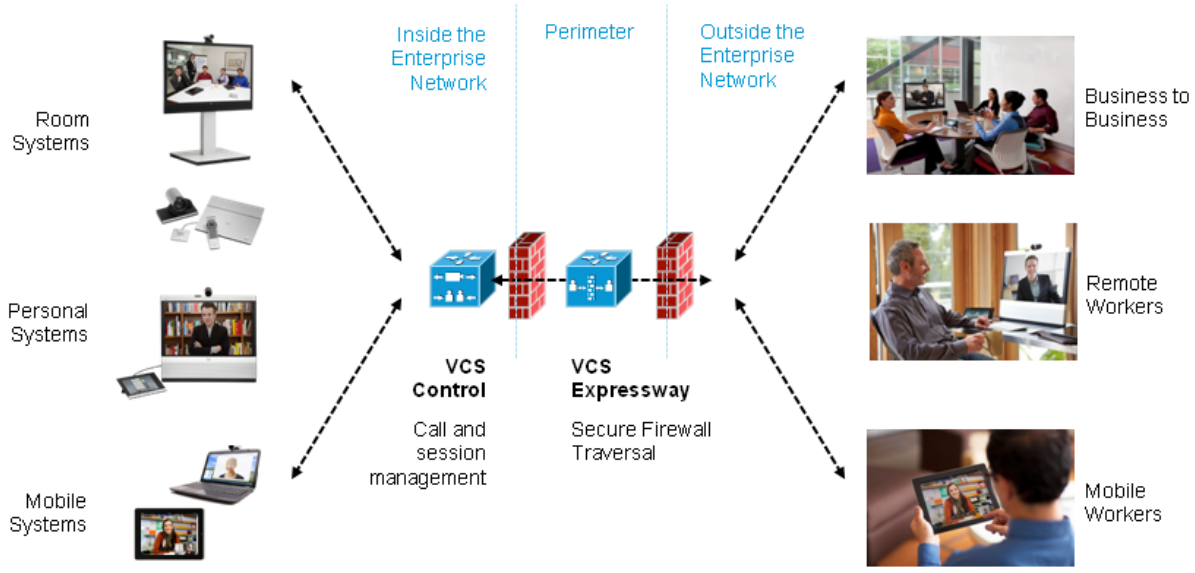

VCS base applications

The VCS is available with alternative base applications as described below.

VCS Control

VCS Control delivers any-to-any enterprise wide conference and session management and interworking capabilities. It extends the reach of telepresence conferences by enabling interworking between Session Initiation Protocol (SIP)- and H.323-compliant endpoints, interworking with third-party endpoints; it integrates with Unified CM and supports third-party IP private branch exchange (IP PBX) solutions. VCS Control implements the tools required for creative session management, including definition of aspects such as routing, dial plans, and bandwidth usage, while allowing organizations to define call-management applications, customized to their requirements.

VCS Expressway

The VCS Expressway deployed with the VCS Control enables smooth video communications easily and securely outside the enterprise. It enables business-to-business video collaboration, improves the productivity of remote and home-based workers, and enables service providers to provide video communications to customers. The application performs securely through standards-based and secure firewall traversal for all SIP and H.323 devices. As a result, organizations benefit from increased employee productivity and enhanced communication with partners and customers.

It uses an intelligent framework that allows endpoints behind firewalls to discover paths through which they can pass media, verify peer-to-peer connectivity through each of these paths, and then select the optimum media connection path, eliminating the need to reconfigure enterprise firewalls.

The VCS Expressway is built for high reliability and scalability, supporting multivendor firewalls, and it can traverse any number of firewalls regardless of SIP or H.323 protocol.

Standard features

The primary purpose of the VCS is to provides secure firewall traversal and session-based access to Cisco Unified Communications Manager for remote workers, without the need for a separate VPN client.

The VCS has the following standard features:

- Provides secure firewall traversal and session-based access to Cisco Unified Communications Manager for remote workers, without the need for a separate VPN client
- 2500 endpoint registrations on a standard Small/Medium system and 5000 registrations on a Large system
- SIP Proxy/Registrar
- SIP Presence Server
- SIP Presence User Agent
- SIP and H.323 support, including SIP / H.323 interworking
- IPv4 and IPv6 support, including IPv4 / IPv6 interworking
- H.323 gatekeeper
- QoS tagging

- Bandwidth management on both a per-call and a total usage basis, configurable separately for calls within the local subzones and to external systems and zones
- Automatic downspeeding option for calls that exceed the available bandwidth
- URI and ENUM dialing via DNS, enabling global connectivity
- Up to 500 non-traversal calls
- Up to 100 traversal calls on a standard Small/Medium system and 500 traversal calls on a Large system
- 1000 external zones with up to 2000 matches
- 1000 subzones and supporting up to 3000 membership rules
- Flexible zone configuration with prefix, suffix and regex support
- Can function as a standalone VCS or be neighbored with other systems such as other VCSs, gatekeepers and SIP proxies
- n+1 redundancy, can be part of a cluster of up to 6 VCSs for increased capacity and redundancy
- Intelligent Route Director for single number dialing and network failover facilities
- Optional endpoint authentication (including AD authentication for Jabber Video clients)
- Control over which endpoints are allowed to register
- Call Policy (also known as Administrator Policy) including support for CPL
- Support for external policy servers
- Can be managed with Cisco TelePresence Management Suite (Cisco TMS) 13.2 or later
- AD authentication for administrators of the VCS
- Pre-configured defaults for:
  - Cisco Unified Communications Manager neighbor zones
  - Cisco TelePresence Advanced Media Gateway
  - Nortel Communication Server neighbor zones
- Embedded setup wizard using a serial port for initial configuration
- System administration using a web interface or RS-232, SSH, and HTTPS
- Intrusion protection

Optional features

Some VCS features are available by the purchase and installation of the appropriate option key:

FindMe™

FindMe is a unique industry solution that gives individual video users a single alias on which they can be contacted regardless of location. Users have the ability to log on to a web-based interface and control where and how they are contacted. The FindMe feature also includes support for Microsoft Lync 2010/2013, which enables FindMe aliases to register as Lync clients, and for Lync clients to view the presence status of FindMe aliases.

Device Provisioning

The Device Provisioning option key allows VCS to provision endpoints with configuration information on request and to supply endpoints with phone book information. (Endpoints including Jabber Video, E20, and the EX and MX Series can request to be provisioned.) All configuration and phone book information is managed in Cisco TMS. The data is then transferred to the VCS, from where it is distributed to endpoint clients through the Provisioning Server running on the VCS.

See TMS provisioning and *Cisco TMS Provisioning Extension Deployment Guide* for more information about how to configure provisioning.

SIP to Microsoft Lync 2010 / 2013 gateweying

The Microsoft Lync back-to-back user agent (Lync B2BUA) on the VCS can be used to route SIP calls between the VCS and a Microsoft Lync Server. It provides interworking between Microsoft ICE (used by Lync clients) and media for communications with standard video endpoints.

The **Microsoft Interoperability** option key is required for all types of communication with Lync 2013.

Advanced Networking

The Advanced Networking option enables the LAN 2 Ethernet port on the VCS Expressway, allowing you to have a secondary IP address for your VCS. This option also includes support for deployments where the VCS Expressway is located behind a static NAT device, allowing it to have separate public and private IP addresses.

This configuration is intended for deployments where the VCS Expressway is located in a DMZ between two separate firewalls on separate network segments.

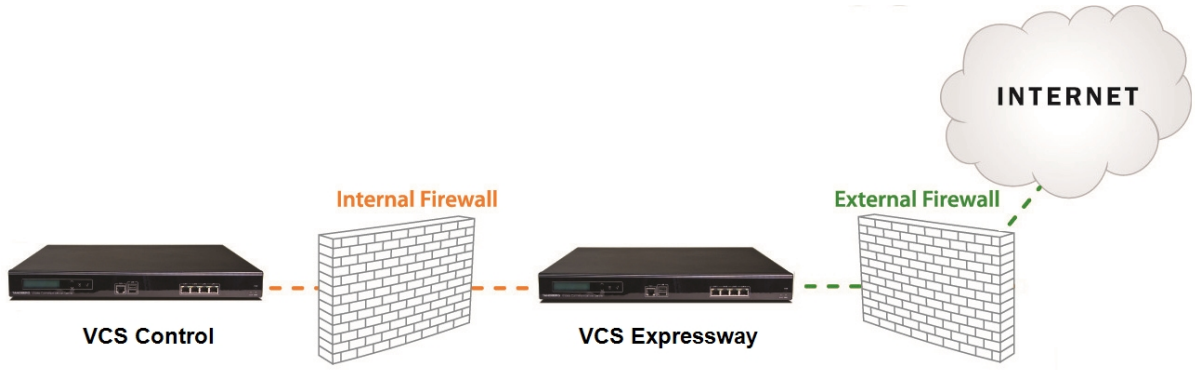

Appliance and virtual machine options

The VCS supports on-premises and cloud applications and is available as a dedicated appliance or as a virtualized application on VMware, with additional support for Cisco Unified Computing System (Cisco UCS) platforms.

See Performance capabilities [p.381] for information about the capabilities of each type of appliance or virtual machine.

Virtual machine options

The VCS has 3 virtualized application deployment types:

- Small (for BE 6000 platform)
- Medium (standard installation)
- Large (extra performance and scalability capabilities)

See *VCS on Virtual Machine Installation Guide* for more information.

CE Series appliances

The VCS is available as a dedicated CE Series appliance which is based on a UCS C220 M3L:

- CE500 appliance: used for standard installations and is equivalent to a Medium VM
- CE1000 appliance: offers extra performance and scalability capabilities and is equivalent to a Large VM

See the CE Series appliance installation guides for more information.

Legacy appliance

The VCS was also previously available on a legacy hardware appliance. Legacy appliances can be identified as having an LCD panel, keypad and a black faceplate.

Legacy appliances have the equivalent capabilities of a standard Medium VM or CE500 appliance.

Installation and initial configuration instructions for the VCS legacy appliance are contained in *VCS Getting Started Guide*.

About this guide

This guide has been divided into several sections, providing conceptual, configuration and reference information about the various features and capabilities of the VCS. It describes a fully equipped version of the VCS. Your version may not have all the described extensions installed.

Most configuration tasks on the VCS can be performed by using either the web interface or a command line interface (CLI). This guide mainly describes how to use the web interface. Some VCS features are only available through the CLI and these are described as appropriate, including the relevant CLI command.

In this guide, instructions for performing a task using the web interface are shown in the format **Menu > Submenu** followed by the **Name** of the page that you will be taken to.

Where command line interface (CLI) commands are included, they are shown in the format:

```
xConfiguration <Element> <SubElement>
xCommand <Command>
```

Related documentation

See Related documentation [p.538] for a full list of documents and web sites referenced in this guide.

Training

Training is available online and at our training locations. For more information on all the training we provide and where our training offices are located, visit www.cisco.com/go/telepresencetraining.

Glossary

A glossary of TelePresence terms is available at: https://tp-tools-web01.cisco.com/start/glossary/.

Accessibility notice

Cisco is committed to designing and delivering accessible products and technologies.

The Voluntary Product Accessibility Template (VPAT) for Cisco TelePresence Video Communication Server is available here:

http://www.cisco.com/web/about/responsibility/accessibility/legal_regulatory/vpats.html#telepresence

You can find more information about accessibility here:

www.cisco.com/web/about/responsibility/accessibility/index.html

Using the web interface

System configuration is normally carried out through the web interface.

To use the web interface:

1. Open a browser window and in the address bar type either:
   - the IP address of the system
   - the FQDN of the system
2. Click **Administrator Login**.
   (This step only applies if you are using "standalone FindMe" i.e. FindMe without Cisco TMSPE.)
3. Enter a valid administrator **Username** and **Password** and click **Login** (see the user accounts section for details on setting up administrator accounts). You are presented with the **Overview** page.

Note that when logging in using the VCS web interface, you may receive a warning message regarding the VCS's security certificate. This can safely be ignored.

A command line interface is also available.

Required fields

All mandatory fields on web pages are indicated by a red star *.

Supported browsers

The VCS web interface is designed for use with Internet Explorer 8 or 9 (not in compatibility mode), Firefox 3 or later, or Chrome. Later versions of Internet Explorer may also work, but are not officially supported. It may work with Opera and Safari, but you could encounter unexpected behavior.

JavaScript and cookies must be enabled to use the VCS web interface.

Using the command line interface (CLI)

The VCS can be configured through a web interface or via a command line interface (CLI).

The CLI is available by default over SSH and through the serial port. These settings are controlled on the System administration page.

To use the CLI:

1. Start an SSH session.
2. Enter the IP address or FQDN of the VCS.
3. Log in with a username of **admin** and your system password.
4. You can now start using the CLI by typing the appropriate commands.

Command types

Commands are divided into the following groups:

- **`xStatus`**: these commands return information about the current status of the system. Information such as current calls and registrations is available through this command group. See Command reference — xStatus [p.515] for a full list of **`xStatus`** commands.
- **`xConfiguration`**: these commands allow you to add and edit single items of data such as IP address and zones. See Command reference — xConfiguration [p.449] for a full list of **`xConfiguration`** commands.
- **`xCommand`**: these commands allow you to add and configure items and obtain information. See Command reference — xCommand [p.496] for a full list of **`xCommand`** commands.
- **`xHistory`**: these commands provide historical information about calls and registrations.
- **`xFeedback`**: these commands provide information about events as they happen, such as calls and registrations.

Note that:

- Typing an **`xConfiguration`** path into the CLI returns a list of values currently configured for that element (and sub-elements where applicable).
- Typing an **`xConfiguration`** path into the CLI followed by a ? returns information about the usage for that element and sub-elements.
- Typing an **`xCommand`** command into the CLI with or without a ? returns information about the usage of that command.

Web page features and layout

This section describes the features that can be found on the VCS web interface pages.

Figure 1: Example list page

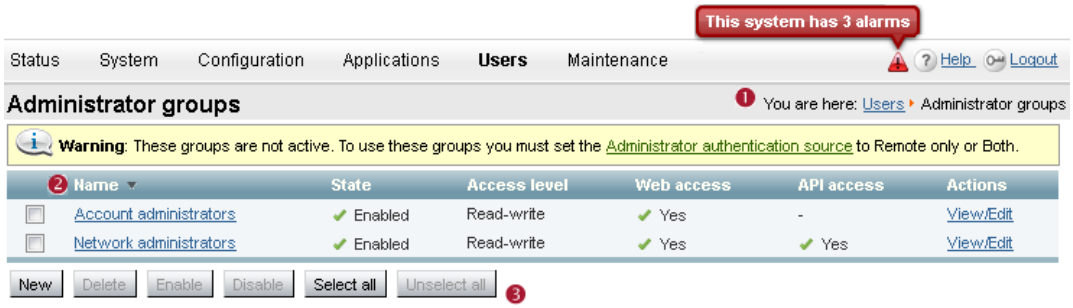

Figure 2: Example configuration page

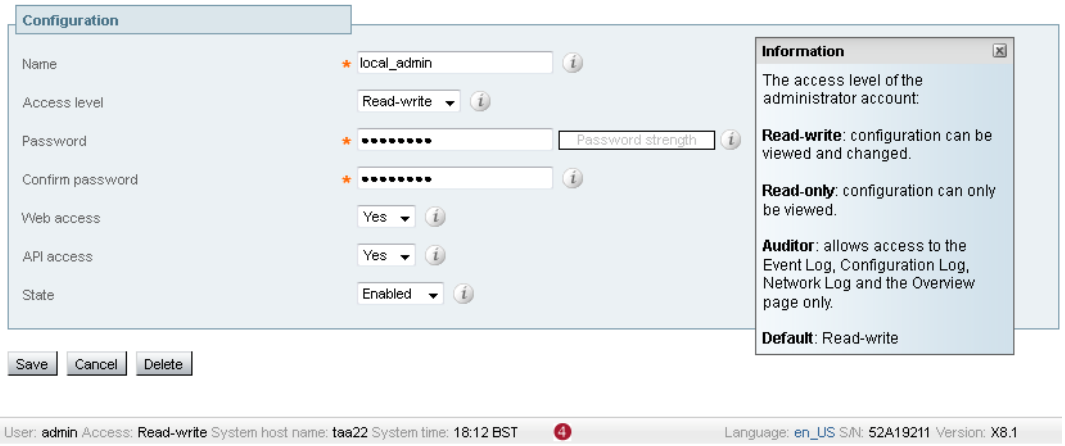

The elements included in the example web pages shown here are described in the table below.

Page element		Description
Page name and location	1	Every page shows the page name and the menu path to that page. Each part of the menu path is a link; clicking on any of the higher level menu items takes you to that page.
System alarm		This icon appears on the top right corner of every page when there is a system alarm in place. Click on this icon to go to the Alarms page which gives information about the alarm and its suggested resolution.
Help		This icon appears on the top right corner of every page. Clicking on this icon opens a new browser window with help specific to the page you are viewing. It gives an overview of the purpose of the page, and introduces any concepts configured from the page.
Log out		This icon appears on the top right corner of every page. Clicking on this icon ends your administrator session.

Page element		Description
Field level information		An information box appears on the configuration pages whenever you either click on the Information icon or click inside a field. This box gives you information about the particular field, including where applicable the valid ranges and default value. To close the information box, click on the X at its top right corner.
Information bar		The VCS provides you with feedback in certain situations, for example when settings have been saved or when you need to take further action. This feedback is given in a yellow information bar at the top of the page.
Sorting columns	2	Click on column headings to sort the information in ascending and descending order.
Select All and Unselect All	3	Use these buttons to select and unselect all items in the list.
Mandatory field	*	Indicates an input field that must be completed.
Peer-specific configuration item	†	When a VCS is part of a cluster, most items of configuration are applied to all peers in a cluster. However, items indicated with a † must be specified separately on each cluster peer.
System Information	4	The name of the user currently logged in and their access privileges, the system name (or LAN 1 IPv4 address if no system name is configured), local system time, currently selected language, serial number and VCS software version are shown at the bottom of the page.

Note that you cannot change configuration settings if your administrator account has read-only privileges.

What's new in this version?

The new features introduced in this release of VCS software are described below.

Unified Communications: Jabber Guest

Cisco Jabber Guest is a consumer to business (C2B) solution that extends the reach of Cisco's enterprise telephony to people outside of a corporate firewall who do not have phones registered with Cisco Unified Communications Manager.

External XMPP federation

External XMPP federation enables users registered to Unified CM IM & Presence to communicate via the VCS Expressway with users from a different XMPP deployment.

TURN media over TCP

The VCS Expressway TURN server supports TURN media over TCP.

This allows clients to use TURN services in environments where UDP connections are not supported or blocked. Configuration of the supported protocols is available only through the CLI command **`xConfiguration Traversal Server TURN ProtocolMode`**.

New 'Unified Communications traversal' zone type

To simplify the configuration of secure traversal client and traversal server zones that are to be used for Unified Communications, you must now use the new zone type of *Unified Communications traversal* when configuring zones via the web interface.

This automatically configures an appropriate traversal zone (a traversal client zone when selected on a VCS Control, or a traversal server zone when selected on a VCS Expressway) that uses SIP TLS with **TLS verify mode** set to *On*, and **Media encryption mode** set to *Force encrypted*.

This replaces the previous **Unified Communications services** setting that was available when configuring traversal client and traversal server zones. Existing zones configured in previous software versions for **Unified Communications services** are automatically converted to use the new *Unified Communications traversal* zone type.

Note that this zone type applies to the web interface only, the underlying CLI configuration settings have not changed.

Support for `X-cisco-srtp-fallback`

Support has been added for the **`X-cisco-srtp-fallback`** package, allowing the VCS's B2BUA to use Cisco Unified Communications Manager-style best effort media encryption for the automatically generated TLS neighbor zones.

RTP and RTCP media demultiplexing ports

In Small/Medium systems, 1 pair of RTP and RTCP media demultiplexing ports are used. These can now either be explicitly specified (**Configuration > Traversal > Ports**) or they can be allocated from the start of the general range of traversal media ports. In previous X8 releases they were always allocated from the start of the traversal media ports range.

In Large systems, 6 pairs of RTP and RTCP media demultiplexing ports are used. These are still always allocated from the start of the traversal media ports range.

After upgrading to X8.2, all existing traversal media port configurations / firewall requirements are maintained.

Diagnostic logging

The diagnostic logging feature has been extended to include:

- an xconfig file
- an xstatus file
- enabling the tcpdump (if requested) cluster-wide
- consolidating all of the files into a single downloadable diagnostic log archive (per peer)
- an indication on the web administration page of which user / IP address initiated the logging

The xconfig and xstatus files are taken at the start of the logging process.

SIP REFER support

The VCS B2BUA has SIP REFER message support. A **SIP REFER mode** advanced zone configuration parameter has been introduced.

By default it will forward REFER messages, but it can be configured to terminate REFER messages and use the B2BUA to perform the transfer (typically to a bridge) on behalf of the far endpoint.

Other enhancements and usability improvements

- The **HTTP server allow list** page (used for mobile and remote access clients to access additional web services inside the enterprise) now displays any automatically configured entries.
- You can configure the timeout period for TLS socket handshake (**Configuration > Protocols > SIP**).
- The TURN relay status page (**Status > TURN relay usage**) now provides a summary list of all the clients that are connected to the TURN server. From there you can select a specific client to see all of the relays and ports that it is using.
- Ability to copy search rules. You can use the **Clone** action on the search rules listing page (**Configuration > Dial plan > Search rules**) to copy and then edit an existing search rule.
- The DNS lookup tool allows you to select which DNS servers (from the configured set of default DNS servers) to use for the lookup.
- The automated protection service now supports IPv6 addresses.

Changed functionality

Access to the systemunit.xml file is now protected. Only authenticated VCS administrator accounts can access the file. This may affect the discovery of VCS by Cisco TMS.

Call status and call history now indicates components routed through the B2BUA for encryption or ICE support with a component type of 'B2BUA' (formerly 'Encryption B2BUA').

Note: The combination of having static NAT mode on and having the B2BUA engaged to do media encryption/decryption can cause the firewall outside the VCS Expressway to mistrust packets originating from the VCS Expressway. You can work around this by configuring the firewall to allow NAT reflection. If your firewall cannot allow this, you must configure the traversal path such that the B2BUA on the VCS Expressway is not engaged.

Network and system settings

This section describes network services and settings related options that appear under the **System** menu of the web interface. These options enable you to configure the VCS in relation to the network in which it is located, for example its IP settings, firewall rules, intrusion protection and the external services used by the VCS (for example DNS, NTP and SNMP).

Network settings 25
Intrusion protection 30
Network services 36
Configuring external manager settings 44
Configuring TMS Provisioning Extension services 45

Network settings

Configuring IP settings

The **IP** page (**System > IP**) is used to configure the IP protocols and network interface settings of the VCS.

IP protocol configuration

You can configure whether the VCS uses *IPv4*, *IPv6* or *Both* protocols. The default is *Both*.

- *IPv4*: it only accepts registrations from endpoints using an IPv4 address, and only takes calls between two endpoints communicating via IPv4. It communicates with other systems via IPv4 only.
- *IPv6*: it only accepts registrations from endpoints using an IPv6 address, and only takes calls between two endpoints communicating via IPv6. It communicates with other systems via IPv6 only.
- *Both*: it accepts registrations from endpoints using either an IPv4 or IPv6 address, and takes calls using either protocol. If a call is between an IPv4-only and an IPv6-only endpoint, the VCS acts as an IPv4 to IPv6 gateway. It communicates with other systems via either protocol.

Some endpoints support both IPv4 and IPv6, however an endpoint can use only one protocol when registering with the VCS. Which protocol it uses is determined by the format used to specify the IP address of the VCS on the endpoint. After the endpoint has registered using either IPv4 or IPv6, the VCS only sends calls to it using this addressing scheme. Calls made to that endpoint from another device using the other addressing scheme are converted (gatewayed) by the VCS.

All IPv6 addresses configured on the VCS are treated as having a /64 network prefix length.

IPv4 to IPv6 gatewaying (interworking)

The VCS can act as a gateway for calls between IPv4 and IPv6 devices. To enable this feature, select an **IP protocol** of *Both*. Calls for which the VCS is acting as an IPv4 to IPv6 gateway are traversal calls and require a traversal call license.

IP gateways and IP routes (static routes)

You can set the default **IPv4 gateway** and **IPv6 gateway** used by the VCS. These are the gateways to which IP requests are sent for IP addresses that do not fall within the VCS's local subnet.

- The default **IPv4 gateway** is 127.0.0.1, which should be changed during the commissioning process.
- The **IPv6 gateway**, if entered, must be a static global IPv6 address. It cannot be a link-local or a stateless auto-configuration (SLAAC) IPv6 address.

You can also configure additional IP routing information (static routes) on the VCS. This is sometimes required when using the Advanced Networking option and deploying the VCS in a DMZ. They may also be required occasionally in other complex network deployments.

- IP routes can be configured using the CLI only: routes can be added by using the xCommand RouteAdd command and can be modified by using the xConfiguration IP Route commands.
- You can configure routes for up to 50 network and host combinations.
- Do not configure IP routes by logging into the system as **root** and using "ip route" statements.

LAN configuration

LAN 1 is the primary network port on the VCS. You can configure the **IPv4 address** and **subnet mask**, the **IPv6 address** and the **Maximum transmission unit (MTU)** for this port.

- The VCS is shipped with a default IP address of 192.168.0.100 (for both LAN ports). This lets you connect the VCS to your network and access it via the default address so that you can configure it remotely.
- The **IPv6 address**, if entered, must be a static global IPv6 address. It cannot be a link-local or a stateless auto-configuration (SLAAC) IPv6 address.
- If you have **Advanced Networking** installed, you can also configure these options for the LAN 2 port.
- The **Maximum transmission unit (MTU)** defaults to 1500 bytes.

About Advanced Networking

The **Advanced Networking** option key enables the LAN 2 port on a VCS for both management and call signaling. This allows you to have a second IP address for your VCS. The option key also enables static NAT functionality on a VCS Expressway.

Configuring dual network interfaces

Dual network interfaces are intended for deployments where the VCS Expressway is located in a DMZ between two separate firewalls on separate network segments. In such deployments, routers prevent devices on the internal network from being able to route IP traffic to the public internet, and instead the traffic must pass through an application proxy such as the VCS Expressway.

To enable the use of dual network interfaces:

1. Ensure that the **Advanced Networking** option key is installed on the VCS Expressway.
2. Set **Use dual network interfaces** to *Yes*.
3. Set **External LAN interface** to *LAN2*.
   LAN 2 should be used as the public interface of the VCS Expressway (if the VCS Expressway is ever clustered, LAN 1 must be used for clustering, and the clustering interface must not be mapped through a NAT).
   This setting also determines the port from which TURN server relay allocations are made.

Note that:

- You should configure the LAN 1 port and restart the VCS before configuring the LAN 2 port.
- The LAN 1 and LAN 2 interfaces must be on different, non-overlapping subnets.
- If you have Advanced Networking enabled but only want to configure one of the Ethernet ports, you must use LAN 1.
- If the VCS Expressway is in the DMZ, the outside IP address of the VCS Expressway must be a public IP address, or if static NAT mode is enabled, the static NAT address must be publicly accessible.
- The VCS Expressway may also be used to traverse internal firewalls within an enterprise. In this case the "public" IP address may not be publicly accessible, but is an IP address accessible to other parts of the enterprise.

Configuring static NAT

You can deploy the VCS Expressway behind a static NAT device, allowing it to have separate public and private IP addresses. This feature is intended for use in deployments where the VCS Expressway is located in a DMZ, and has the **Advanced Networking** feature enabled.

In these deployments, the externally-facing LAN port has static NAT enabled in order to use both a private and public IPv4 address; the internally facing LAN port does not have static NAT enabled and uses a single IPv4 (or IPv6) address.

In such a deployment, traversal clients should be configured to use the internally-facing IP address of the VCS Expressway.

To enable the use of a static NAT:

1. Ensure that the **Advanced Networking** option key is installed.
2. For the externally-facing LAN port:
   a. In the **IPv4 address** field, enter the VCS Expressway's private IP address.
   b. Set **IPv4 static NAT mode** to *On*.
   c. In the **IPv4 static NAT address** field, enter the VCS Expressway's public IP address - this is the IP address of the outside of the NAT.

Note: The combination of having static NAT mode on and having the B2BUA engaged to do media encryption/decryption can cause the firewall outside the VCS Expressway to mistrust packets originating from the VCS Expressway. You can work around this by configuring the firewall to allow NAT reflection. If your firewall cannot allow this, you must configure the traversal path such that the B2BUA on the VCS Expressway is not engaged.

Configuring Ethernet settings

The **Ethernet** page (**System > Ethernet**) is used to configure the speed of the connection between the VCS and the Ethernet switch to which it is connected. The speed must be set to the same value on both systems. If you have the **Advanced Networking** option enabled, you can configure the Ethernet speed separately for each LAN port.

The default is *Auto*, which means that the two systems will auto-negotiate the appropriate speed.

Note: we recommend that you use the default value of **Auto** unless the switch to which you are connecting is unable to auto-negotiate. A mismatch in Ethernet speed settings between the VCS and Ethernet switch will at best result in packet loss; at worst it will make the system inaccessible for endpoints and system administrators.

Configuring DNS settings

The **DNS** page (**System > DNS**) is used to configure the VCS's DNS servers and DNS settings.

Configuring the system host and domain name

The **System host name** defines the DNS host name that this VCS is known by.

- It must be unique for each peer in a cluster.
- It is used to identify the VCS on a remote log server (a default name of "TANDBERG" is used if the **System host name** is not specified).

The **Domain name** is used when attempting to resolve unqualified server addresses (for example `ldapserver`). It is appended to the unqualified server address before the query is sent to the DNS server. If the server address is fully qualified (for example `ldapserver.mydomain.com`) or is in the form of an IP address, the domain name is not appended to the server address before querying the DNS server.

It applies to the following configuration settings in the VCS:

- LDAP server
- NTP server
- External Manager server
- Remote logging server

You are recommended to use an IP address or FQDN (Fully Qualified Domain Name) for all server addresses.

Note that the FQDN of the VCS is the **System host name** plus the **Domain name**.

Impact on SIP messaging

The **System host name** and **Domain name** are also used to identify references to this VCS in SIP messaging, where an endpoint has configured the VCS as its SIP proxy in the form of an FQDN (as opposed to an IP address, which is not recommended).

In this case the VCS may, for example, reject an INVITE request if the FQDN configured on the endpoint does not match the **System host name** and **Domain name** configured on the VCS. (Note that this check occurs because the SIP proxy FQDN is included in the route header of the SIP request sent by the endpoint to the VCS.)

DNS requests

By default, DNS requests use a random port from within the system's ephemeral port range.

If required, you can specify a custom port range instead by setting **DNS requests port range** to *Use a custom port range* and then defining the **DNS requests port range start** and **DNS requests port range end** fields. Note that setting a small source port range will increase your vulnerability to DNS spoofing attacks.

Configuring DNS server addresses

You must specify at least one DNS server to be queried for address resolution if you want to:

- Use FQDNs (Fully Qualified Domain Names) instead of IP addresses when specifying external addresses (for example for LDAP and NTP servers, neighbor zones and peers).
- Use features such as URI dialing or ENUM dialing.

Default DNS servers

You can specify up to 5 default DNS servers.

- The VCS only queries one server at a time; if that server is not available the VCS will try another server from the list.

- The order that the servers are specified is not significant; the VCS attempts to favor servers that were last known to be available.

Per-domain DNS servers

In addition to the 5 default DNS servers, you can specify 5 additional explicit DNS servers for specified domains. This can be useful in deployments where specific domain hierarchies need to be routed to their explicit authorities.

For each additional per-domain DNS server address you can specify up to 2 **Domain names**. Any DNS queries under those domains are forwarded to the specified DNS server instead of the default DNS servers.

You can specify redundant per-domain servers by adding an additional per-domain DNS server address and associating it with the same **Domain names**. In this scenario, DNS requests for those domains will be sent in parallel to both DNS servers.

Tip: you can also use the DNS lookup tool (**Maintenance > Tools > Network utilities > DNS lookup**) to check which domain name server (DNS server) is responding to a request for a particular hostname.

Caching DNS records

To improve performance, DNS lookups may be cached. This cache is flushed automatically whenever the DNS configuration is changed.

You can also force the cache to be flushed by clicking **Flush DNS cache**.

Configuring Quality of Service settings

The **Quality of Service** (QoS) page (**System > Quality of Service**) is used to configure QoS options for outbound traffic from the VCS.

This allows the network administrator to tag all signaling and media packets flowing through the VCS with one specific QoS tag and hence provide the ability to prioritize video traffic over normal data traffic. Management traffic, for example SNMP messages, is not tagged.

Supported mechanisms

The VCS supports the *DiffServ* (Differentiated Services) mechanism which puts the specified **Tag value** in the TOS (Type Of Service) field of the IPv4 header or TC (Traffic Class) field of the IPv6 header.

Intrusion protection

Configuring firewall rules

Firewall rules provide the ability to configure IP table rules to control access to the VCS at the IP level. On the VCS, these rules have been classified into groups and are applied in the following order:

- Dynamic system rules: these rules ensure that all established connections/sessions are maintained. They also include any rules that have been inserted by the automated detection feature as it blocks specific addresses. Finally, it includes a rule to allow access from the loopback interface.
- Non-configurable application rules: this incorporates all necessary application-specific rules, for example to allow SNMP traffic and H.323 gatekeeper discovery.
- User-configurable rules: this incorporates all of the manually configured firewall rules (as described in this section) that refine — and typically restrict — what can access the VCS. There is a final rule in this group that allows all traffic destined for the VCS LAN 1 interface (and the LAN 2 interface if the **Advanced Networking** option key is installed).

There is also a final, non-configurable rule that drops any broadcast or multicast traffic that has not already been specifically allowed or denied by the previous rules.

By default any traffic that is destined for the specific IP address of the VCS is allowed access, but that traffic will be dropped if the VCS is not explicitly listening for it. You have to actively configure extra rules to lock down the system to your specifications.

Note that return traffic from outbound connections is always accepted.

User-configured rules

The user-configured rules are typically used to restrict what can access the VCS. You can:

- Specify the source IP address subnet from which to allow or deny traffic.
- Choose whether to drop or reject denied traffic.
- Configure well known services such as SSH, HTTP/HTTPS or specify customized rules based on transport protocols and port ranges.
- Configure different rules for the LAN 1 and LAN 2 interfaces (if the **Advanced Networking** option key is installed), although note that you cannot configure specific destination addresses such as a multicast address.
- Specify the priority order in which the rules are applied.

Setting up and activating firewall rules

The **Firewall rules configuration** page is used to set up and activate a new set of firewall rules.

The set of rules shown will initially be a copy of the current active rules. (On a system where no firewall rules have previously been defined, the list will be empty.) If you have a lot of rules you can use the **Filter** options to limit the set of rules displayed. Note that the built-in rules are not shown in this list.

You can then change the set of firewall rules by adding new rules, or by modifying or deleting any existing rules. Any changes made at this stage to the current active rules are held in a pending state. When you have completed making all the necessary changes you can activate the new rules, replacing the previous set.

To set up and activate new rules:

1. Go to **System > Protection > Firewall rules > Configuration**.
2. Make your changes by adding new rules, or by modifying or deleting any existing rules as required.
   You can change the order of the rules by using the up/down arrows and to swap the priorities of adjacent rules.
   - New or modified rules are shown as **Pending** (in the **State** column).
   - Deleted rules are shown as **Pending delete**.
3. When you have finished configuring the new set of firewall rules, click **Activate firewall rules**.
4. Confirm that you want to activate the new rules. This will replace the existing set of active rules with the set you have just configured.
   After confirming that you want to activate the new rules, they are validated and any errors reported.
5. If there are no errors, the new rules are temporarily activated and you are taken to the **Firewall rules confirmation** page.
   You now have 15 seconds to confirm that you want to keep the new rules:
   - Click **Accept changes** to permanently apply the rules.
   - If the 15 seconds time limit expires or you click **Rollback changes**, the previous rules are reinstated and you are taken back to the configuration page.

   The automatic rollback mechanism provided by the 15 seconds time limit ensures that the client system that activated the changes is still able to access the system after the new rules have been applied. If the client system is unable to confirm the changes (because it can no longer access the web interface) then the rollback will ensure that its ability to access the system is reinstated.

When configuring firewall rules, you also have the option to **Revert all changes**. This discards all pending changes and resets the working copy of the rules to match the current active rules.

Rule settings

The configurable options for each rule are:

Field	Description	Usage tips
Priority	The order in which the firewall rules are applied.	The rules with the highest priority (1, then 2, then 3 and so on) are applied first. Firewall rules must have unique priorities. Rule activation will fail if there are multiple rules with the same priority.
Interface	The LAN interface on which you want to control access.	This only applies if the **Advanced Networking** option key is installed.
IP address and **Prefix length**	These two fields together determine the range of IP addresses to which the rule applies.	The **Address range** field shows the range of IP addresses to which the rule applies, based on the combination of the **IP address** and **Prefix length**. The prefix length range is 0-32 for an IPv4 address, and 0-128 for an IPv6 address.
Service	Choose the service to which the rule applies, or choose *Custom* to specify your own transport type and port ranges.	Note that if the destination port of a service is subsequently reconfigured on the VCS, for example from 80 to 8080, any firewall rules containing the old port number will not be automatically updated.
Transport	The transport protocol to which the rule applies.	Only applies if specifying a *Custom* service.

Field	Description	Usage tips
Start and **end port**	The port range to which the rule applies.	Only applies if specifying a UDP or TCP *Custom* service.
Action	The action to take against any IP traffic that matches the rule. *Allow*: Accept the traffic. *Drop*: Drop the traffic without any response to the sender. *Reject*: Reject the traffic with an 'unreachable' response.	Dropping the traffic means that potential attackers are not provided with information as to which device is filtering the packets or why. For deployments in a secure environment, you may want to configure a set of low priority rules (for example, priority 50000) that deny access to all services and then configure higher priority rules (for example, priority 20) that selectively allow access for specific IP addresses.
Description	An optional free-form description of the firewall rule.	If you have a lot of rules you can use the **Filter** by description options to find related sets of rules.

Current active firewall rules

The **Current active firewall rules** page (**System > Protection > Firewall rules > Current active rules**) shows the user-configured firewall rules that are currently in place on the system. Note that there is also a set of built-in rules that are not shown in this list.

If you want to change the rules you must go to the **Firewall rules configuration** page from where you can set up and activate a new set of rules.

Configuring automated intrusion protection

The automated protection service can be used to detect and block malicious traffic and to help protect the VCS from dictionary-based attempts to breach login security.

It works by parsing the system log files to detect repeated failures to access specific service categories, such as SIP, SSH and web/HTTPS access. When the number of failures within a specified time window reaches the configured threshold, the source host address (the intruder) and destination port are blocked for a specified period of time. The host address is automatically unblocked after that time period so as not to lock out any genuine hosts that may have been temporarily misconfigured.

You can configure ranges of addresses that are exempted from one or more categories (see Configuring exemptions [p.34] below).

Automated protection should be used in combination with the firewall rules feature - use automated protection to dynamically detect and temporarily block specific threats, and use firewall rules to permanently block a range of known host addresses.

About protection categories

The set of available protection categories on your VCS are pre-configured according to the software version that is running. You can enable, disable or configure each category, but you cannot add additional categories.

The rules by which specific log file messages are associated with each category are also pre-configured and cannot be altered. You can view example log file entries that would be treated as an access failure/intrusion

within a particular category by going to **System > Protection > Automated detection > Configuration** and clicking on the name of the category. The examples are displayed above the **Status** section at the bottom of the page.

Enabling automated protection

To enable intrusion protection on your VCS:

1. Go to **System > Administration**.
2. Set **Automated protection service** to *On*.
3. Click **Save**.
4. You must then ensure that the required protection categories are enabled and configured, and that any required exemptions are specified, as described below.
   All protection categories are disabled by default.

Configuring protection categories

The **Automated detection overview** page (**System > Protection > Automated detection > Configuration**) is used to enable and configure the VCS's protection categories, and to view current activity.

The page displays a summary of all available categories, showing:

- **Status**: this indicates if the category is configured to be *On* or *Off*. When *On*, it additionally indicates the state of the category: this is normally *Active*, but may temporarily display *Initializing* or *Shutting down* when a category has just been enabled or disabled. Check the alarms if it displays *Failed*.)
- **Currently blocked**: the number of addresses currently being blocked for this category.
- **Total failures**: the total number of failed attempts to access the services associated with this category.
- **Total blocks**: the total number of times that a block has been triggered. Note that:
  - The **Total blocks** will typically be less than the **Total failures** (unless the **Trigger level** is set to 1).
  - The same address can be blocked and released several times per category, with each occurrence counting as a separate block.
- **Exemptions**: the number of addresses that are configured as exempt from this category.

From this page, you can also view any currently blocked addresses or any exemptions that apply to a particular category.

Enabling and disabling categories

To enable or disable one or more protection categories:

1. Go to **System > Protection > Automated detection > Configuration**.
2. Select the check box alongside the categories you want to enable or disable.
3. Click **Enable** or **Disable** as appropriate.

Configuring a category's blocking rules

To configure a category's specific blocking rules:

1. Go to **System > Protection > Automated detection > Configuration**.
2. Click on the name of the category you want to configure.
   You are taken to the configuration page for that category.

3. Configure the category as required:
   - **State**: whether protection for that category is enabled or disabled.
   - **Description**: a free-form description of the category.
   - **Trigger level** and **Detection window**: these settings combine to define the blocking threshold for the category. They specify the number of failed access attempts that must occur before the block is triggered, and the time window in which those failures must occur.
   - **Block duration**: the period of time for which the block will remain in place.
4. Click **Save**.

Configuring exemptions

The **Automated detection exemptions** page (**System > Protection > Automated detection > Exemptions**) is used to configure any IP addresses that are to be exempted always from one or more protection categories.

To configure exempted addresses:

1. Go to **System > Protection > Automated detection > Exemptions**.
2. Click on the **Address** you want to configure, or click **New** to specify a new address.
3. Enter the **Address** and **Prefix length** to define the range of IPv4 addresses you want to exempt.
4. Select the categories from which the address is to be exempted.
5. Click **Add address**.

Note that if you exempt an address that is currently blocked, it will remain blocked until its block duration expires (unless you unblock it manually via the **Blocked addresses** page).

Managing blocked addresses

The **Blocked addresses** page (**System > Protection > Automated detection > Blocked addresses**) is used to manage the addresses that are currently blocked by the automated protection service:

- It shows all currently blocked addresses and from which categories those addresses have been blocked.
- You can unblock an address, or unblock an address and at the same time add it to the exemption list. Note that if you want to permanently block an address, you must add it to the set of configured firewall rules.

If you access this page via the links on the **Automated detection overview** page it is filtered according to your chosen category. It also shows the amount of time left before an address is unblocked from that category.

Investigating access failures and intrusions

If you need to investigate specific access failures or intrusion attempts, you can review all the relevant triggering log messages associated with each category. To do this:

1. Go to **System > Protection > Automated detection > Configuration**.
2. Click on the name of the category you want to investigate.
3. Click **View all matching intrusion protection triggers for this category**.
   The system will display all the relevant events for that category. You can then search through the list of triggering events for the relevant event details such as a user name, address or alias.

Automated protection service and clustered systems

When the automated protection service is enabled in a clustered system:

- Each peer maintains its own count of connection failures and the trigger threshold must be reached on each peer for the intruder's address to be blocked by that peer.
- Addresses are blocked against only the peer on which the access failures occurred. This means that if an address is blocked against one peer it may still be able to attempt to access another peer (from which it may too become blocked).
- A blocked address can only be unblocked for the current peer. If an address is blocked by another peer, you must log in to that peer and then unblock it.
- Category settings and the exemption list are applied across the cluster.
- The statistics displayed on the **Automated detection overview** page are for the current peer only.

Additional information

- When a host address is blocked and tries to access the system, the request is dropped (the host receives no response).
- A host address can be blocked simultaneously for multiple categories, but may not necessarily be blocked by all categories. Those blocks may also expire at different times.
- When an address is unblocked (either manually or after its block duration expires), it has to fail again for the full number of times as specified by the category's trigger level before it will be blocked for a second time by that category.
- A category is reset whenever it is enabled. All categories are reset if the system is restarted or if the automated protection service is enabled at the system level. When a category is reset:
  - Any currently blocked addresses are unblocked.
  - Its running totals of failures and blocks are reset to zero.
- You can view all Event Log entries associated with the automated protection service by clicking **View all intrusion protection events** on the **Automated detection overview** page.

Network services

Configuring system name and access settings

The **System administration** page (**System > Administration**) is used to configure the name of the VCS and the means by which it is accessed by administrators.

System settings

System name

The **System name** is used to identify the VCS. It appears in various places in the web interface, and in the display on the front panel of the unit (so that you can identify it when it is in a rack with other systems). The **System name** is also used by Cisco TMS.

We recommend that you give the VCS a name that allows you to easily and uniquely identify it.

Ephemeral ports range

You can specify the **Ephemeral port range start** and **end** values. This defines the port range to use for ephemeral outbound connections not otherwise constrained by VCS call processing.

The default range of 30000 – 35999 applies to new installations of X8.1 or later; the previous default range of 40000 – 49999 still applies to earlier releases that have upgraded to X8.1.

Administration access settings

While you can administer the VCS via a PC connected directly to the unit via a serial cable, you may want to access the system remotely over IP. You can do this using either the web interface (via HTTPS) or through a command line interface (via SSH).

The configurable options are:

Field	Description	Usage tips
Services		
Serial port / console	Whether the system can be accessed locally via either the serial port (for a physical system) or VMware console (for a virtual machine). Default is *On*.	Serial port / console access is always enabled for one minute following a restart, even if it is normally disabled.
SSH service	Whether the VCS can be accessed via SSH and SCP. Default is *On*.	
Web interface (over HTTPS)	Whether the VCS can be accessed via the web interface. Default is *On*.	Cisco TMS accesses the VCS via the web server. If HTTPS mode is turned off, Cisco TMS will not be able to access it.
Session limits		
Session time out	The number of minutes that an administration session (serial port, HTTPS or SSH) or a FindMe session may be inactive before the session is timed out. Default is 30 minutes.	

Field	Description	Usage tips
Per-account session limit	The number of concurrent sessions that each individual administrator account is allowed on each VCS.	This includes web, SSH and serial sessions. Session limits are not enforced on FindMe accounts or the root account. A value of 0 turns session limits off.
System session limit	The maximum number of concurrent administrator sessions allowed on each VCS.	This includes web, SSH and serial sessions. Session limits are not enforced on FindMe accounts or the root account; however active root account sessions do count towards the total number of current administrator sessions. A value of 0 turns session limits off.
System protection		
Automated protection service	Whether the automated protection service is active. Default is *Off*.	After enabling the service you must go and configure the specific protection categories.
Automatic discovery protection	Controls how management systems such as Cisco TMS can discover this VCS. *Off*: automatic discovery is allowed. *On*: Cisco TMS has to be manually configured to discover this VCS and must provide administrator account credentials. Default is *Off*.	You must restart the system for any changes to take effect.
Web server configuration		
Redirect HTTP requests to HTTPS	Determines whether HTTP requests are redirected to the HTTPS port. Default is *On*.	HTTPS must also be enabled for access via HTTP to function.
HTTP Strict Transport Security (HSTS)	Determines whether web browsers are instructed to only ever use a secure connection to access this server. Enabling this feature gives added protection against man-in-the-middle (MITM) attacks. *On*: the Strict-Transport-Security header is sent with all responses from the web server, with a 1 year expiry time. *Off*: the Strict-Transport-Security header is not sent, and browsers work as normal. Default is *On*.	See below for more information about HSTS.

Field	Description	Usage tips
Client certificate-based security	Controls the level of security required to allow client systems (typically web browsers) to communicate with the VCS over HTTPS. *Not required*: the client system does not have to present any form of certificate. *Certificate validation*: the client system must present a valid certificate that has been signed by a trusted certificate authority (CA). Note that a restart is required if you are changing from *Not required* to *Certificate validation*. *Certificate-based authentication*: the client system must present a valid certificate that has been signed by a trusted CA and contains the client's authentication credentials. Default: *Not required*	**Important**: Enabling *Certificate validation* means that your browser (the client system) can use the VCS web interface only if it has a valid (in date and not revoked by a CRL) client certificate that is signed by a CA in the VCS's trusted CA certificate list. Ensure your browser has a valid client certificate before enabling this feature. The procedure for uploading a certificate to your browser may vary depending on the browser type and you may need to restart your browser for the certificate to take effect. You can upload CA certificates on the Managing the trusted CA certificate list [p.309] page, and test client certificates on the Testing client certificates [p.317] page. Enabling *Certificate-based authentication* means that the standard login mechanism is no longer available. You can log in only if your browser certificate is valid and the credentials it provides have the appropriate authorization levels. You can configure how the VCS extracts credentials from the browser certificate on the Certificate-based authentication configuration page. This setting does not affect client verification of the VCS's server certificate.
Certificate revocation list (CRL) checking	Specifies whether HTTPS client certificates are checked against certificate revocation lists (CRLs). *None*: no CRL checking is performed. *Peer*: only the CRL associated with the CA that issued the client's certificate is checked. *All*: all CRLs in the trusted certificate chain of the CA that issued the client's certificate are checked. Default: *All*	Only applies if **Client certificate-based security** is enabled.
CRL inaccessibility fallback behavior	Controls the revocation checking behavior if the revocation status cannot be established, for example if the revocation source cannot be contacted. *Treat as revoked*: treat the certificate as revoked (and thus do not allow the TLS connection). *Treat as not revoked*: treat the certificate as not revoked. Default: *Treat as not revoked*	Only applies if **Client certificate-based security** is enabled.

By default, access via HTTPS and SSH is enabled. For optimum security, disable HTTPS and SSH and use the serial port to manage the system. Because access to the serial port allows the password to be reset, we recommend that you install the VCS in a physically secure environment.

HTTP Strict Transport Security (HSTS)

HTTP Strict Transport Security (HSTS) provides a mechanism where a web server forces a web browser to communicate with it using secure connections only.

As of October 2012, this mechanism is supported by the following browsers:

- Chrome, versions 4.0.211.0 and later
- Firefox, versions 4 and later

When HSTS is enabled, a browser that supports HSTS will:

- Automatically turn any insecure links to the website into secure links (for example, **`http://example.com/page/`** is modified to **`https://example.com/page/`** before accessing the server).
- Only allow access to the server if the connection is secure (for example, the server's TLS certificate is valid, trusted and not expired).

Browsers that do not support HSTS will ignore the Strict-Transport-Security header and work as before. They will still be able to access the server.

Note that compliant browsers only respect Strict-Transport-Security headers if they access the server through its fully qualified name (rather than its IP address).

VCS front panel (legacy appliances only)

The LCD panel on the front of legacy (non-CE Series) VCS appliances unit has a rotating display of the VCS's system name, IP addresses, alarms, and the number of current traversal calls, non-traversal calls and registrations.

To control the display of status items:

- **`ENTER`** stops the display from automatically rotating through the status items. This is useful if you need to review all of the alarms or read a long IPv6 address. Press **`ENTER`** again to resume the rotating display.
- **`UP/DOWN`** displays the previous or next status item.

You can configure the front panel to hide this identifying information, if required for security reasons for example, by using the CLI command **`xConfiguration Administration LCDPanel Mode`**. If the mode is set to *Off* the front panel only displays "Cisco".

Configuring SNMP settings

The **SNMP** page (**System > SNMP**) is used to configure the VCS's SNMP settings.

Tools such as Cisco TMS or HP OpenView may act as SNMP Network Management Systems (NMS). They allow you to monitor your network devices, including the VCS, for conditions that might require administrative attention.

The VCS supports the most basic MIB-II tree (.1.3.6.1.2.1) as defined in *RFC 1213*.

The information made available by the VCS includes the following:

- system uptime
- system name
- location
- contact
- interfaces
- disk space, memory, and other machine-specific statistics

By default, SNMP is *Disabled*, therefore to allow the VCS to be monitored by an SNMP NMS (including Cisco TMS), you must select an alternative **SNMP mode**. The configurable options are:

Field	Description	Usage tips
SNMP mode	Controls the level of SNMP support. *Disabled*: no SNMP support. *SNMPv3 (secure SNMP)*: supports authentication and encryption. *SNMPv3 plus TMS support*: secure SNMPv3 plus non-secure access to OID 1.3.6.1.2.1.1.2.0 only. *SNMPv2c*: non-secure community-based SNMP.	If you want to use secure SNMPv3 but you also use Cisco TMS as your external manager, you must select *SNMPv3 plus TMS support*.
Community name	The VCS's SNMP community name. The default is *public*.	Only applies to *SNMPv2c* and *SNMPv3 plus TMS support*.
System contact	The name of the person who can be contacted regarding issues with the VCS.	The **System contact** and **Location** are used for reference purposes by administrators when following up on queries.
Location	Specifies the physical location of the VCS.	
Username	The VCS's SNMP username, used to identify this SNMP agent to the SNMP manager.	Only applies when using secure SNMPv3.
v3 Authentication settings (only applicable to SNMPv3)		
Authentication mode	Enables or disables SNMPv3 authentication.	
Type	The algorithm used to encrypt authentication credentials. *SHA*: Secure Hash Algorithm. *MD5*: Message-Digest algorithm 5.	
Password	The password used to encrypt authentication credentials.	Must be at least 8 characters.
v3 Privacy settings (only applicable to SNMPv3)		
Privacy mode	Enables or disables SNMPv3 encryption.	
Type	The security model used to encrypt messages. *DES*: Data Encryption Standard 56-bit encryption. *AES*: Advanced Encryption Standard 128-bit encryption.	
Password	The password used to encrypt messages.	Must be at least 8 characters.

The VCS does not support SNMP traps or SNMP sets, therefore it cannot be managed via SNMP.

Note: SNMP is disabled by default, because of the potentially sensitive nature of the information involved. Do not enable SNMP on a VCS on the public internet or in any other environment where you do not want to expose internal system information.

Configuring time settings

The **Time** page (**System > Time**) is used to configure the VCS's NTP servers and to specify the local time zone.

An NTP server is a remote server with which the VCS synchronizes in order to ensure its time is accurate. The NTP server provides the VCS with UTC time.

Accurate time is necessary for correct system operation.

Configuring the NTP servers

To configure the VCS with one or more NTP servers to be used when synchronizing system time, enter the **Address** of up to five servers in one of the following formats, depending on the system's DNS settings (you can check these settings on the **DNS** page, **System > DNS**):

- if there are no **DNS servers** configured, you must use an IP address for the NTP server
- if there are one or more **DNS servers** configured, you can use an FQDN or IP address for the NTP server
- if there is a DNS **Domain name** configured in addition to one or more **DNS servers**, you can use the server name, FQDN or IP address for the NTP server

Three of the **Address** fields default to NTP servers provided by Cisco.

You can configure the **Authentication** method used by the VCS when connecting to an NTP server. Use one of the following options for each NTP server connection:

Authentication method	Description
Disabled	No authentication is used.
Symmetric key	Symmetric key authentication. When using this method a **Key ID**, **Hash** method and **Pass phrase** must be specified. The values entered here must match exactly the equivalent settings on the NTP server. You can use the same symmetric key settings across multiple NTP servers. However, if you want to configure each server with a different pass phrase, you must also ensure that each server has a unique key ID.
Private key	Private key authentication. This method uses an automatically generated private key with which to authenticate messages sent to the NTP server.

Displaying NTP status information

The synchronization status between the NTP server and the VCS is shown in the **Status** area as follows:

- *Starting*: the NTP service is starting.
- *Synchronized*: the VCS has successfully obtained accurate system time from an NTP server.
- *Unsynchronized*: the VCS is unable to obtain accurate system time from an NTP server.
- *Down*: the VCS's NTP client is not running.
- *Reject*: the NTP service is not accepting NTP responses.

Note that updates may take a few minutes to be displayed in the status table.

Other status information available includes:

Field	Description
NTP server	The actual NTP server that has responded to the request. This may be different to the NTP server in the NTP server address field.
Condition	Gives a relative ranking of each NTP server. All servers that are providing accurate time are given a status of *Candidate*; of those, the server that the VCS considers to be providing the most accurate time and is therefore using shows a status of *sys.peer*.
Flash	A code giving information about the server's status. `00 ok` means there are no issues. See the Flash status word reference table [p.520] for a complete list of codes.
Authentication	Indicates the status of the current authentication method. One of *ok*, *bad* or *none*. *none* is specified when the **Authentication** method is *Disabled*.
Event	Shows the last event as determined by NTP (for example *reachable* or *sys.peer*)
Reachability	Indicates the results of the 8 most recent contact attempts between the VCS and the NTP server, with a tick indicating success and a cross indicating failure. The result of the most recent attempt is shown on the far right. Each time the NTP configuration is changed, the NTP client is restarted and the **Reachability** field will revert to all crosses apart from the far right indicator which will show the result of the first connection attempt after the restart. However, the NTP server may have remained contactable during the restart process.
Offset	The difference between the NTP server's time and the VCS's time.
Delay	The network delay between the NTP server and the VCS.
Stratum	The degree of separation between the VCS and a reference clock. `1` indicates that the NTP server is a reference clock.
Ref ID	A code identifying the reference clock.
Ref time	The last time that the NTP server communicated with the reference clock.

For definitions of the remaining fields on this page, and for further information about NTP, see Network Time Protocol website.

VCS time display and time zone

Local time is used throughout the web interface. It is shown in the system information bar at the bottom of the screen and is used to set the timestamp that appears at the start of each line in the Event Log.

Note that UTC timestamps are included at the end of each entry in the Event Log.

Internally, the VCS maintains its system time in UTC. It is based on the VCS's operating system time, which is synchronized using an NTP server if one is configured. If no NTP servers are configured, the VCS uses its own operating system time to determine the time and date.

Specifying your local **Time zone** lets the VCS determine the local time where the system is located. It does this by offsetting UTC time by the number of hours (or fractions of hours) associated with the selected time zone. It also adjusts the local time to account for summer time (also known as daylight saving time) when appropriate.

Configuring the Login page

The **Login page configuration** page (**System > Login page**) is used to specify a message and image to appear on the login page for both users and administrators.

The **Welcome message title** and **text** will appear to administrators when attempting to log in using the CLI, and to FindMe users and administrators when attempting to log in using the web interface.

You can upload an image that will appear above the welcome message on the login page when using the web interface.

- supported image file formats are JPG, GIF and PNG
- images larger than 200x200 pixels will be scaled down

If the VCS is using the TMS Provisioning Extension services to provide FindMe account data, then users log into their FindMe accounts through Cisco TMS, not through VCS.

Note that this feature is not configurable using the CLI.

Configuring external manager settings

The **External manager** page (**System > External manager**) is used to configure the VCS's connection to an external management system.

An external manager is a remote system, such as the Cisco TelePresence Management Suite (Cisco TMS), used to monitor events occurring on the VCS, for example call attempts, connections and disconnections, and as a place for where the VCS can send alarm information. The use of an external manager is optional.

Field	Description	Usage tips
Address and **path**	To use an external manager, you must configure the VCS with the IP address or host name and path of the external manager to be used.	If you are using Cisco TMS as your external manager, use the default path of **tms/public/external/management/SystemManagementService.asmx**.
Protocol	Determines whether communications with the external manager are over *HTTP* or *HTTPS*. The default is *HTTPS*.	
Certificate verification mode	Controls whether the certificate presented by the external manager is verified.	If you enable verification, you must also add the certificate of the issuer of the external manager's certificate to the file containing the VCS's trusted CA certificates. This is done from the Managing the trusted CA certificate list [p.309] page (**Maintenance > Security certificates > Trusted CA certificate**).

Note that:

- the VCS will continue to operate without loss of service if its connection to Cisco TMS fails. This applies even if the VCSs are clustered. No specific actions are required as the VCS and Cisco TMS will automatically start communicating with each other again after the connection is re-established.
- Cisco TMS identifies the VCS as a "TANDBERG VCS".

Configuring TMS Provisioning Extension services

Cisco TMSPE services are hosted on Cisco TMS. They provide the user, device and phone book data that is used by the VCS's Provisioning Server to service provisioning requests from endpoint devices. They also provide the VCS with the FindMe account configuration data that it uses to provide FindMe services.

The **TMS Provisioning Extension services** page (**System > TMS Provisioning Extension services**) is used to configure how the VCS connects to the Cisco TMSPE services. We recommend that you use Cisco TMS to make any changes to the Cisco TMSPE services' configuration settings. Any changes made to the settings via this page will not be applied within Cisco TMS.

The **FindMe** service can only be configured if the **FindMe** option key is installed, and the **Users**, **Phone books** and **Devices** services can only be configured if the **Device Provisioning** option key is installed.

The configurable options are:

Field	Description	Usage tips
Default connection configuration This section specifies default connection settings for accessing the Cisco TMSPE services. Each specific service can choose to use these default settings or, alternatively, specify its own connection settings, for example if a different Cisco TMSPE server is being used for each service.		
Server address	The IP address or Fully Qualified Domain Name (FQDN) of the service.	
Destination port	The listening port on the Cisco TMSPE service. Default is 443.	
Encryption	The encryption to use for the connection to the Cisco TMSPE service. *Off*: no encryption is used. *TLS*: TLS encryption is used. Default is *TLS*.	A TLS connection is recommended.
Verify certificate	Controls whether the certificate presented by the Cisco TMSPE service is verified against the VCS's current trusted CA list and, if loaded, the revocation list. Default is *Yes*.	If you enable verification: ■ IIS (on the Cisco TMSPE server) must be installed with a signed certificate and be set to enforce SSL connections. ■ You must add the certificate of the issuer of the Cisco TMSPE server's certificate to the file containing the VCS's trusted CA certificates. This is done from the Managing the trusted CA certificate list [p.309] page (**Maintenance > Security certificates > Trusted CA certificate**).

Field	Description	Usage tips
Check certificate hostname	Controls whether the hostname contained within the certificate presented by the Cisco TMSPE service is verified by the VCS. Default is *Yes*.	If enabled, the certificate hostname (also known as the Common Name) must match the specified **Server address**. If the server address is an IP address, the required hostname is obtained via a DNS lookup. This only applies if **Verify certificate** is *Yes*.
Base group	The ID used to identify this VCS (or VCS cluster) with the Cisco TMSPE service.	The TMS administrator will supply this value. The **Base group** ID used by the **Devices** service must be explicitly specified as it is normally different from that used by the other services.
Authentication username and **password**	The username and corresponding password used by the VCS to authenticate itself with the Cisco TMSPE service.	If TLS encryption is not enabled, the authentication password is sent in the clear.
Service-specific configuration You can specify the connection details for each of the Cisco TMSPE services: **Users**, **FindMe**, **Phone books** and **Devices**.		
Connect to this service	Controls whether the VCS connects to the Cisco TMSPE service. Default is *No*.	If enabled, the status of the connection is shown to the right of the field; this can be either *Checking*, *Active* or *Failed*. Click details to view full status information.
Polling interval	The frequency with which the VCS checks the Cisco TMSPE service for updates. Defaults are: **FindMe**: *2 minutes* **Users**: *2 minutes* **Phone books**: *1 day* The **Device** service polling interval is set to 30 seconds and cannot be modified.	You can request an immediate update of all services by clicking **Check for updates** at the bottom of the page.
Use the default connection configuration	Controls whether the service uses the default connection configuration for Cisco TMSPE services. Default is *Yes*.	If *No* is selected, an additional set of connection configuration parameters will appear. You can then specify alternative connection details for the service that will override those specified in the **Default connection configuration** section.

A full and immediate resynchronization of all data between the VCS and Cisco TMS can be triggered at any time by clicking **Perform full synchronization** (at the bottom of the of the **TMS Provisioning Extension services** page). Note that this will result in a temporary (a few seconds) lack of service on the VCS while the data is deleted and fully refreshed. If you only need to ensure that all of the latest updates within Cisco TMS have been supplied to the VCS then click **Check for updates** instead.

Further status information

The menu options under **Status > Applications > TMS Provisioning Extension services** provide full status information about the Cisco TMSPE services, including:

- the status of the connection between the VCS and the Cisco TMSPE services
- views of the user, FindMe and phone book data supplied by the Cisco TMSPE services

- a summary of the requests received from endpoint devices and the number of provisioning licenses being consumed
- the status of the devices that are making provisioning requests to the VCS's Provisioning Server

Firewall traversal

This section describes how to configure your VCS Control and VCS Expressway in order to traverse firewalls.

About firewall traversal 49
Configuring a traversal client and server 54
Configuring ports for firewall traversal 55
Firewall traversal and authentication 59
Configuring Expressway and traversal endpoint communications 60
About ICE and TURN services 61

About firewall traversal

The purpose of a firewall is to control the IP traffic entering your network. Firewalls will generally block unsolicited incoming requests, meaning that any calls originating from outside your network will be prevented. However, firewalls can be configured to allow outgoing requests to certain trusted destinations, and to allow responses from those destinations. This principle is used by Cisco's Expressway technology to enable secure traversal of any firewall.

The Expressway solution

The Expressway solution consists of:

- A VCS Expressway located outside the firewall on the public network or in the DMZ, which acts as the firewall traversal server.
- A VCS Control or other traversal-enabled endpoint located in a private network, which acts as the firewall traversal client.

The two systems work together to create an environment where all connections between the two are outbound, i.e. established from the client to the server, and thus able to successfully traverse the firewall.

We recommend that both the VCS Expressway and the VCS Control run the same software version.

How does it work?

The traversal client constantly maintains a connection via the firewall to a designated port on the traversal server. This connection is kept alive by the client sending packets at regular intervals to the server. When the traversal server receives an incoming call for the traversal client, it uses this existing connection to send an incoming call request to the client. The client then initiates the necessary outbound connections required for the call media and/or signaling.

This process ensures that from the firewall's point of view, all connections are initiated from the traversal client inside the firewall out to the traversal server.

For firewall traversal to function correctly, the VCS Expressway must have one traversal server zone configured on it for each client system that is connecting to it (this does not include traversal-enabled endpoints which register directly with the VCS Expressway; the settings for these connections are configured in a different way). Likewise, each VCS client must have one traversal client zone configured on it for each server that it is connecting to.

The ports and protocols configured for each pair of client-server zones must be the same. See the Configuring a traversal client and server [p.54] for a summary of the required configuration on each system. Because the VCS Expressway listens for connections from the client on a specific port, you are recommended to create the traversal server zone on the VCS Expressway before you create the traversal client zone on the VCS Control.

Note that the traversal client and the traversal server must both be VCS systems (neither can be a Cisco Expressway).

Endpoint traversal technology requirements

The "far end" (at home or at a hotel, for example) endpoint requirements to support firewall traversal are summarized below:

- For H.323, the endpoint needs to support Assent or H460.18 and H460.19.
- For SIP, the endpoint just needs to support standard SIP.
  - Registration messages will keep the "'far end" firewall ports open for VCS to send messages to that endpoint. The VCS waits for media from the endpoint behind the firewall, before returning media to it on that same port – the endpoint does have to support media transmission and reception on the same port.
  - The VCS also supports SIP outbound, which is an alternative method of keeping firewalls open without the overhead of using the full registration message.
- SIP and H.323 endpoints can register to the VCS Expressway or they can just send calls to the VCS Expressway as the local "DMZ" firewall has relevant ports open to allow communication to the VCS Expressway over SIP and H.323 ports.

Endpoints can also use ICE to find the optimal (in their view of what optimal is) path for media communications between themselves. Media can be sent directly from endpoint to endpoint, from endpoint via the outside IP address of the destination firewall to the destination endpoint, or from the endpoint via a TURN server to destination endpoint.

- The VCS supports ICE for calls where the VCS does not have to traverse media (for example if there is no IPv4/IPv6 conversion or SIP / H.323 conversion required); typically this means 2 endpoints which are able to support ICE, directly communicating to a VCS Expressway cluster.
- The VCS Expressway has its own built-in TURN server to support ICE-enabled endpoints.

H.323 firewall traversal protocols

The VCS supports two different firewall traversal protocols for H.323: Assent and H.460.18/H.460.19.

- Assent is Cisco's proprietary protocol.
- H.460.18 and H.460.19 are ITU standards which define protocols for the firewall traversal of signaling and media respectively. These standards are based on the original Assent protocol.

A traversal server and traversal client must use the same protocol in order to communicate. The two protocols each use a different range of ports.

SIP firewall traversal protocols

The VCS supports the Assent protocol for SIP firewall traversal of media.

The signaling is traversed through a TCP/TLS connection established from the client to the server.

Media demultiplexing

The VCS Expressway uses media demultiplexing in the following call scenarios:

- Any H.323 or SIP call leg to/from a VCS Control through a traversal zone configured to use Assent.
- Any H.323 call leg to/from a VCS Control through a traversal server zone configured to use H460.19 in demultiplexing mode
- H.323 call legs between a VCS Expressway and an Assent or H.460.19 enabled endpoint

The VCS Expressway uses non-demultiplexed media for call legs directly to/from SIP endpoints (that is endpoints which do not support Assent or H.460.19), or if the traversal server zone is not configured to use H.460.19 in demultiplexing mode.

Media demultiplexing ports on the VCS Expressway are allocated from the general range of **traversal media ports**. This applies to all RTP/RTCP media, regardless of whether it is H.323 or SIP. On new installations of X8.1 or later, the default media traversal port range is 36000 to 59999, and is set on the VCS Control (**Configuration > Local Zones > Traversal Subzone**). In Large VCS Expressway systems the first 12 ports in the range – 36000 to 36011 by default – are always reserved for multiplexed traffic. The VCS Expressway listens on these ports. You cannot configure a distinct range of demultiplex listening ports on Large systems: they always use the first 6 pairs in the media port range. On Small/Medium systems you can explicitly specify which 2 ports listen for multiplexed RTP/RTCP traffic, on the VCS Expressway (**Configuration > Traversal > Ports**). On upgrades to X8.2 or later, the VCS Control retains the media traversal port range from the previous version (could be 50000 - 54999 or 36000 - 59999, depending on source version). The VCS Expressway retains the previously configured demultiplexing pair (either 2776 & 2777 or 50000 & 50001 by default, depending on upgrade path) and the switch **Use configured demultiplexing ports** is set to *Yes*. If you do not want to use a particular pair of ports, switch **Use configured demultiplexing ports** to *No*, then the VCS Expressway will listen on the first pair of ports in the media traversal port range (36000 and 36001 by default). In this case, we recommend that you close the previously configured ports after you configure the firewall for the new ports.

For example, in a SIP call from within an enterprise to an endpoint at home through a VCS Control/VCS Expressway pair, the only demultiplexing that would occur would be on the VCS Expressway ports facing the VCS Control:

Enterprise endpoint ⟷	**VCS Control**		⟷ **VCS Expressway**		⟷ **Home endpoint**
	Non-demuxed	**Non-demuxed**	**Demuxed**	**Non-demuxed**	
RTP ports	36002	36004	36000	36002	
RTCP ports	36003	36005	36001	36003	

However, an H.323 call from within an enterprise to an Assent capable H.323 endpoint at home through the same VCS Control/VCS Expressway would perform demultiplexing on both sides of the VCS Expressway:

Enterprise endpoint ⟷	**VCS Control**		⟷ **VCS Expressway**		⟷ **Home endpoint**
	Non-demuxed	**Non-demuxed**	**Demuxed**	**Demuxed**	
RTP ports	36002	36004	36000	36000	
RTCP ports	36003	36005	36001	36001	

If the VCS Expressway has Advanced Networking, it will still use the same port numbers as described above, but they will be assigned to the internal and external IP addresses.

Firewall traversal configuration overview

This section provides an overview to how the VCS can act as a traversal server or as a traversal client.

VCS as a firewall traversal client

The VCS can act as a firewall traversal client on behalf of SIP and H.323 endpoints registered to it, and any systems that are neighbored with it. To act as a firewall traversal client, the VCS must be configured with information about the systems that will act as its firewall traversal server.

You do this by adding a traversal client zone on the VCS client (**Configuration > Zones > Zones**) and configuring it with the details of the traversal server. See Configuring traversal client zones [p.168] for more information. You can create more than one traversal client zone if you want to connect to multiple traversal servers.

Note that:

- In most cases, you will use a VCS Control as a firewall traversal client. However, a VCS Expressway can also act as a firewall traversal client.
- The firewall traversal server used by the VCS client must be a VCS Expressway.

VCS as a firewall traversal server

The VCS Expressway has all the functionality of a VCS Control (including being able to act as a firewall traversal client). However, its main feature is that it can act as a firewall traversal server for other Cisco systems and any traversal-enabled endpoints that are registered directly to it. It can also provide TURN relay services to ICE-enabled endpoints.

Configuring traversal server zones

For the VCS Expressway to act as a firewall traversal server for Cisco systems, you must create a traversal server zone on the VCS Expressway (**Configuration > Zones > Zones**) and configure it with the details of the traversal client. See Configuring traversal server zones [p.170] for more information.

You must create a separate traversal server zone for every system that is its traversal client.

Configuring other traversal server features

- For the VCS Expressway to act as a firewall traversal server for traversal-enabled endpoints (such as Cisco MXP endpoints and any other endpoints that support the ITU H.460.18 and H.460.19 standards), no additional configuration is required. See Configuring Expressway and traversal endpoint communications [p.60] for more information.
- To enable TURN relay services and find out more about ICE, see About ICE and TURN services [p.61].
- To reconfigure the default ports used by the VCS Expressway, see Configuring ports for firewall traversal [p.55].

Firewall traversal and Advanced Networking

The Advanced Networking option key enables the LAN 2 interface on the VCS Expressway (the option is not available on a VCS Control). The LAN 2 interface is used in situations where the VCS Expressway is located

in a DMZ that consists of two separate networks - an inner DMZ and an outer DMZ - and your network is configured to prevent direct communication between the two.

With the LAN 2 interface enabled, you can configure the VCS with two separate IP addresses, one for each network in the DMZ. Your VCS then acts as a proxy server between the two networks, allowing calls to pass between the internal and outer firewalls that make up your DMZ.

When Advanced Networking is enabled, all ports configured on the VCS, including those relating to firewall traversal, apply to both IP addresses; you cannot configure ports separately for each IP address.

Configuring a traversal client and server

The basic steps in configuring a traversal client and server are as follows:

Step	Description
1	On the VCS Expressway, create a traversal server zone (this represents the incoming connection from the VCS Control). In the **Username** field, enter the VCS Control's authentication username.
2	On the VCS Expressway, add the VCS Control's authentication username and password as credentials into the local authentication database.
3	On the VCS Control, create a traversal client zone (this represents the connection to the VCS Expressway).
4	Enter the same authentication **Username** and **Password** as specified on the VCS Expressway.
5	Configure all the modes and ports in the H.323 and SIP protocol sections to match identically those of the traversal server zone on the VCS Expressway.
6	Enter the VCS Expressway's IP address or FQDN in the **Peer 1 address** field.

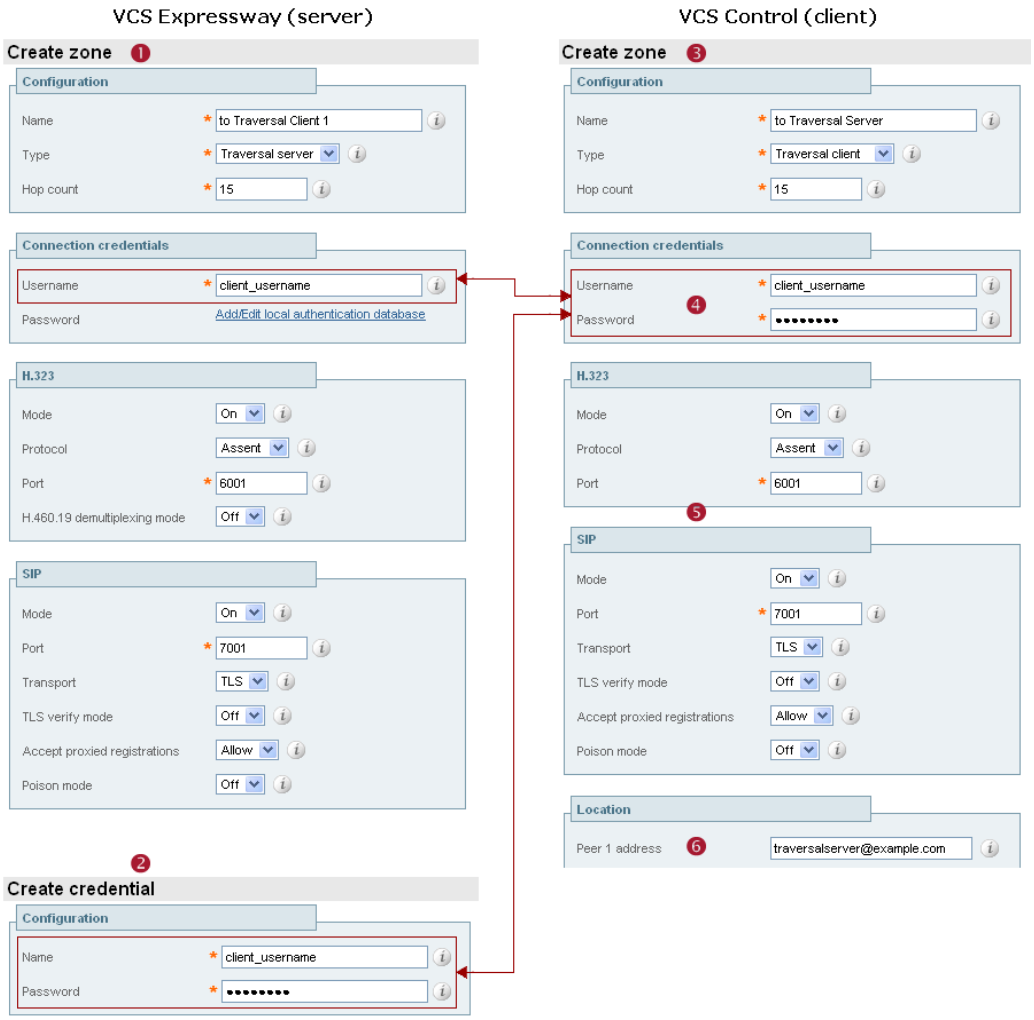

Configuring ports for firewall traversal

Ports play a vital part in firewall traversal configuration. The correct ports must be set on the VCS Expressway, traversal client and firewall in order for connections to be permitted.

Ports are initially configured on the VCS Expressway by the VCS Expressway administrator. The firewall administrator and the traversal client administrator should then be notified of the ports, and they must configure their systems to connect to these specific ports on the server. The only port configuration required on the traversal client is the range of ports it uses for outgoing connections; the firewall administrator may need to know this information so that if necessary they can configure the firewall to allow outgoing connections from those ports.

The Port usage [p.336] pages (under **Maintenance > Tools > Port usage**) list all the IP ports that are being used on the VCS, both inbound and outbound. This information can be provided to your firewall administrator so that the firewall can be configured appropriately.

When Advanced Networking is enabled, all ports configured on the VCS, including those relating to firewall traversal, apply to both IP addresses; you cannot configure ports separately for each IP address.

The Expressway solution works as follows:

1. Each traversal client connects via the firewall to a unique port on the VCS Expressway.
2. The server identifies each client by the port on which it receives the connection, and the authentication credentials provided by the client.
3. After the connection has been established, the client regularly sends a probe to the VCS Expressway to keep the connection alive.
4. When the VCS Expressway receives an incoming call for the client, it uses this initial connection to send an incoming call request to the client.
5. The client then initiates one or more outbound connections. The destination ports used for these connections differ for signaling and/or media, and depend on the protocol being used (see the following sections for more details).

Configuring the firewall

For Expressway firewall traversal to function correctly, your firewall must be configured to:

- allow initial outbound traffic from the client to the ports being used by the VCS Expressway
- allow return traffic from those ports on the VCS Expressway back to the originating client

Note: we recommend that you turn off any H.323 and SIP protocol support on the firewall: these are not needed in conjunction with the Expressway solution and may interfere with its operation.

Configuring traversal server ports

The VCS Expressway has specific listening ports used for firewall traversal. Rules must be set on your firewall to allow connections to these ports. In most cases the default ports should be used. However, you have the option to change these ports if necessary by going to the **Ports** page (**Configuration > Traversal > Ports**).

The configurable ports for signaling are:

- **H.323 Assent call signaling port**; default is *2776*
- **H.323 H.460.18 call signaling port**; default is *2777*

RTP and RTCP media demultiplexing ports

The port configuration options depend upon the type of appliance or VM:

- Small/Medium systems: 1 pair of RTP and RTCP media demultiplexing ports are used. They can either be explicitly specified or they can be allocated from the start of the general range of traversal media ports.
- Large systems: 6 pairs of RTP and RTCP media demultiplexing ports are used. They are always allocated from the start of the traversal media ports range.

Configuring ports for connections from traversal clients

Each traversal server zone specifies an H.323 port and a SIP port to use for the initial connection from the client. Each time you configure a new traversal server zone on the VCS Expressway, you are allocated default port numbers for these connections:

- H.323 ports start at UDP/6001 and increment by 1 for every new traversal server zone.
- SIP ports start at TCP/7001 and increment by 1 for every new traversal server zone.

You can change these default ports if necessary but you must ensure that the ports are unique for each traversal server zone. After the H.323 and SIP ports have been set on the VCS Expressway, matching ports must be configured on the corresponding traversal client. Note that:

- The default port used for the initial connections from MXP endpoints is the same as that used for standard RAS messages, that is UDP/1719. While you can change this port on the VCS Expressway, most endpoints will not support connections to ports other than UDP/1719, therefore we recommend that you leave this as the default.
- You must allow outbound connections through your firewall to each of the unique SIP and H.323 ports that are configured on each of the VCS Expressway's traversal server zones.

The following table shows the default ports used for connections to the VCS Expressway.

Table 1: Default traversal port connections

Protocol	Call signaling	Media
Assent	UDP/1719: listening port for RAS messages TCP/2776: listening port for H.225 and H.245 protocols	The RTP and RTCP media demultiplexing ports in Large system are always allocated from the start of the general range of traversal media ports (UDP/36000-36011*). In Small/Medium systems the media demultiplexing ports can either be explicitly specified or they can be allocated from the start of the traversal media ports range.

Table 1: Default traversal port connections (continued)

H.460.18/19	UDP/1719: listening port for RAS messages TCP/1720: listening port for H.225 protocol TCP/2777: listening port for H.245 protocol	The RTP and RTCP media demultiplexing ports in Large systems are always allocated from the start of the general range of traversal media ports (UDP/36000-36011*). In Small/Medium systems the media demultiplexing ports can either be explicitly specified or they can be allocated from the start of the traversal media ports range. RTP and RTCP media non-demultiplexing ports are allocated from the remainder of the traversal media ports range: UDP/36002-59999*.
SIP	SIP call signaling uses the same port as used by the initial connection between the client and server.	Where the traversal client is a VCS, SIP media uses Assent to traverse the firewall.

* On new installations of X8.1 or later, the default media traversal port range is 36000 to 59999, and is set on the VCS Control (**Configuration > Local Zones > Traversal Subzone**). In Large VCS Expressway systems the first 12 ports in the range – 36000 to 36011 by default – are always reserved for multiplexed traffic. The VCS Expressway listens on these ports. You cannot configure a distinct range of demultiplex listening ports on Large systems: they always use the first 6 pairs in the media port range. On Small/Medium systems you can explicitly specify which 2 ports listen for multiplexed RTP/RTCP traffic, on the VCS Expressway (**Configuration > Traversal > Ports**). On upgrades to X8.2 or later, the VCS Control retains the media traversal port range from the previous version (could be 50000 - 54999 or 36000 - 59999, depending on source version). The VCS Expressway retains the previously configured demultiplexing pair (either 2776 & 2777 or 50000 & 50001 by default, depending on upgrade path) and the switch **Use configured demultiplexing ports** is set to *Yes*. If you do not want to use a particular pair of ports, switch **Use configured demultiplexing ports** to *No*, then the VCS Expressway will listen on the first pair of ports in the media traversal port range (36000 and 36001 by default). In this case, we recommend that you close the previously configured ports after you configure the firewall for the new ports.

The call signaling ports are configured via **Configuration > Traversal > Ports**. The traversal media port range is configured via **Configuration > Local Zone > Traversal Subzone**.

If your VCS Expressway does not have any endpoints registering directly with it, and it is not part of a cluster, then UDP/1719 is not required. You therefore do not need to allow outbound connections to this port through the firewall between the VCS Control and VCS Expressway.

Configuring TURN ports

The VCS Expressway can be enabled to provide TURN services (Traversal Using Relays around NAT) which can be used by ICE-enabled SIP endpoints.

The ports used by these services are configurable via **Configuration > Traversal > TURN**.

The ICE clients on each of the SIP endpoints must be able to discover these ports, either by using SRV records in DNS or by direct configuration.

Configuring ports for connections out to the public internet

In situations where the VCS Expressway is attempting to connect to an endpoint on the public internet, you will not know the exact ports on the endpoint to which the connection will be made. This is because the ports

to be used are determined by the endpoint and advised to the VCS Expressway only after the server has located the endpoint on the public internet. This may cause problems if your VCS Expressway is located within a DMZ (where there is a firewall between the VCS Expressway and the public internet) as you will not be able to specify in advance any rules that will allow you to connect out to the endpoint's ports.

You can however specify the ports on the VCS Expressway that are used for calls to and from endpoints on the public internet so that your firewall administrator can allow connections via these ports. The ports that can be configured for this purpose are:

Table 2: Port connections out to the public internet

H.323	SIP	TURN
TCP/1720: signaling	TCP/5061: signaling	UDP/3478 (default): TURN services **
UDP/1719: signaling	UDP/5060 (default): signaling	
UDP/36000-59999: media*	UDP/36000-59999: media*	UDP/24000-29999 (default range): media **
TCP/15000-19999: signaling	TCP: a temporary port in the range 25000-29999 is allocated	

* On new installations of X8.1 or later, the default media traversal port range is 36000 to 59999, and is set on the VCS Control (**Configuration > Local Zones > Traversal Subzone**). In Large VCS Expressway systems the first 12 ports in the range – 36000 to 36011 by default – are always reserved for multiplexed traffic. The VCS Expressway listens on these ports. You cannot configure a distinct range of demultiplex listening ports on Large systems: they always use the first 6 pairs in the media port range. On Small/Medium systems you can explicitly specify which 2 ports listen for multiplexed RTP/RTCP traffic, on the VCS Expressway (**Configuration > Traversal > Ports**). On upgrades to X8.2 or later, the VCS Control retains the media traversal port range from the previous version (could be 50000 - 54999 or 36000 - 59999, depending on source version). The VCS Expressway retains the previously configured demultiplexing pair (either 2776 & 2777 or 50000 & 50001 by default, depending on upgrade path) and the switch **Use configured demultiplexing ports** is set to *Yes*. If you do not want to use a particular pair of ports, switch **Use configured demultiplexing ports** to *No*, then the VCS Expressway will listen on the first pair of ports in the media traversal port range (36000 and 36001 by default). In this case, we recommend that you close the previously configured ports after you configure the firewall for the new ports.

** On Large systems you can configure a range of TURN request listening ports. The default range is 3478 – 3483. The default TURN relay media port range of 24000 – 29999 applies to new installations of X8.1 or later. The previous default range of 60000 – 61799 still applies to earlier releases that have upgraded to X8.1.

Firewall traversal and authentication

The VCS Expressway allows only authenticated client systems to use it as a traversal server.

Upon receiving the initial connection request from the traversal client, the VCS Expressway asks the client to authenticate itself by providing its authentication credentials. The VCS Expressway then looks up the client's credentials in its own authentication database. If a match is found, the VCS Expressway accepts the request from the client.

The settings used for authentication depend on the type of traversal client:

Traversal client	VCS Expressway traversal server
VCS Control (or VCS Expressway) The VCS client provides its **Username** and **Password**. These are set on the traversal client zone by using **Configuration > Zones > Zones > Edit zone**, in the **Connection credentials** section.	The traversal server zone for the VCS client must be configured with the client's authentication **Username**. This is set on the VCS Expressway by using **Configuration > Zones > Zones > Edit zone**, in the **Connection credentials** section. There must also be an entry in the VCS Expressway's authentication database with the corresponding client username and password.
Endpoint The endpoint client provides its **Authentication ID** and **Authentication Password**.	There must be an entry in the VCS Expressway's authentication database with the corresponding client username and password.

Note that all VCS traversal clients must authenticate with the VCS Expressway, even if the VCS Expressway is not using device authentication for endpoint clients.

Authentication and NTP

All VCS traversal clients that support H.323 must authenticate with the VCS Expressway. The authentication process makes use of timestamps and requires that each system uses an accurate system time. The system time on a VCS is provided by a remote NTP server. Therefore, for firewall traversal to work, all systems involved must be configured with details of an NTP server.

Configuring Expressway and traversal endpoint communications

Traversal-enabled H.323 endpoints can register directly with the VCS Expressway and use it for firewall traversal.

The **Locally registered endpoints** page (**Configuration > Traversal > Locally registered endpoints**) allows you to configure the way in which the VCS Expressway and traversal-enabled endpoints communicate.

The options available are:

Field	Description
H.323 Assent mode	Determines whether or not H.323 calls using Assent mode for firewall traversal are allowed.
H.460.18 mode	Determines whether or not H.323 calls using H.460.18/19 mode for firewall traversal are allowed.
H.460.19 demux mode	Determines whether the VCS Expressway operates in demultiplexing mode for calls from locally registered endpoints. *On*: uses the media demultiplexing ports for all calls. *Off*: each call uses a separate pair of ports for media.
H.323 preference	Determines which protocol the VCS Expressway uses if an endpoint supports both Assent and H.460.18.
UDP probe retry interval	The frequency (in seconds) with which locally registered endpoints send a UDP probe to the VCS Expressway.
UDP probe retry count	The number of times locally registered endpoints attempt to send a UDP probe to the VCS Expressway.
UDP probe keep alive interval	The interval (in seconds) with which locally registered endpoints send a UDP probe to the VCS Expressway after a call is established, in order to keep the firewall's NAT bindings open.
TCP probe retry interval	The frequency (in seconds) with which locally registered endpoints send a TCP probe to the VCS Expressway.
TCP probe retry count	The number of times locally registered endpoints attempt to send a TCP probe to the VCS Expressway.
TCP probe keep alive interval	The interval (in seconds) with which locally registered endpoints send a TCP probe to the VCS Expressway after a call is established, in order to keep the firewall's NAT bindings open.

About ICE and TURN services

About ICE

ICE (Interactive Connectivity Establishment) provides a mechanism for SIP client NAT traversal. ICE is not a protocol, but a framework which pulls together a number of different techniques such as TURN and STUN.

It allows endpoints (clients) residing behind NAT devices to discover paths through which they can pass media, verify peer-to-peer connectivity via each of these paths and then select the optimum media connection path. The available paths typically depend on any inbound and outbound connection restrictions that have been configured on the NAT device. Such behavior is described in *RFC 4787*.

An example usage of ICE is two home workers communicating via the internet. If the two endpoints can communicate via ICE the VCS Expressway may (depending on how the NAT devices are configured) only need to take the signaling and not take the media (and is therefore a non-traversal call). If the initiating ICE client attempts to call a non-ICE client, the call set-up process reverts to a conventional SIP call requiring NAT traversal via media latching where the VCS also takes the media and thus requires a traversal license.

For more information about ICE, see *RFC 5245*.

About TURN

TURN (Traversal Using Relays around NAT) services are relay extensions to the STUN network protocol that enable a SIP or H.323 client to communicate via UDP or TCP from behind a NAT device.

For more information about TURN see *RFC 5766*, and for detailed information about the base STUN protocol, see *RFC 5389*.

Each ICE client requests the TURN server to allocate relays for the media components of the call. A relay is required for each component in the media stream between each client.

After the relays are allocated, each ICE client has 3 potential connection paths (addresses) through which it can send and receive media:

- its host address which is behind the NAT device (and thus not reachable from endpoints on the other side of the NAT)
- its publicly-accessible address on the NAT device
- a relay address on the TURN server

The endpoints then decide, by performing connectivity checks through ICE, how they are going to communicate. Depending upon how the NAT devices are configured, the endpoints may be able to communicate between their public-facing addresses on the NAT devices or they may have to relay the media via the TURN server. If both endpoints are behind the same NAT device they can send media directly between themselves using their internal host addresses.

After the media route has been selected, the TURN relay allocations are released if the chosen connection paths do not involve routing via the TURN server. Note that the signaling always goes via the VCS, regardless of the final media communication path chosen by the endpoints.

Capabilities and limitations

- Small/Medium systems support up to 1800 relay allocations. This is typically enough to support 100 calls but does depend on the network topology and the number of media stream components used for the call (for

example, some calls may use Duo Video, or other calls might be audio only).

- A Large system supports up to 6000 relays, spread evenly across 6 ports where each port is limited to handling 1000 relays. This limit is not strictly enforced, so we recommend adding an SRV record for each port to enable round robin.
- Clustered VCSs: if the requested TURN server's relays are fully allocated the server will respond to the requesting client with the details of an alternative server in the cluster (the TURN server currently with the most available resources).
- The VCS's TURN services are supported over single and dual network interfaces (via the Advanced Networking option). For dual network interfaces, the TURN server listens on both interfaces but relays are allocated only on the VCS's externally facing LAN interface.
- Microsoft ICE (which is not standards-based) is not supported by the VCS Expressway's TURN server; to enable communications between the VCS and Microsoft Lync clients that are registered through a Microsoft Edge Server you need to use the B2BUA for Microsoft Lync.
- The TURN server does not support bandwidth requests. Traversal zone bandwidth limits do not apply.
- The VCS Expressway TURN server supports TURN media over TCP and UDP. Configuration of the supported protocols is available only through the CLI command **`xConfiguration Traversal Server TURN ProtocolMode`**.
- The VCS Expressway TURN server supports UDP relays over TCP; it does not currently support TCP relays.

Configuring TURN services

TURN relay services are only available on the VCS Expressway. To use TURN services you need the TURN Relay option key (this controls the number of TURN relays that can be simultaneously allocated by the TURN server).

The **TURN** page (**Configuration > Traversal > TURN**) is used to configure the VCS Expressway's TURN settings. If you are configuring your VCS Expressway for delegated credential checking you can also determine, via the **Authentication realm**, the traversal zone through which credential checking of TURN server requests is delegated.

The configurable options are:

Field	Description	Usage tips
TURN services	Determines whether the VCS offers TURN services to traversal clients.	

Field	Description	Usage tips
TURN requests port	The listening port for TURN requests. The default is 3478. On Large systems you can configure a range of TURN request listening ports. The default range is 3478 – 3483.	To allow endpoints such as Jabber Video to discover TURN services, you need to set up DNS SRV records for _turn._udp. and _turn._tcp (either for the single port, or range of ports as appropriate). If you need to change the **Turn requests port** (o range, for Large systems) while the **Turn services** are already *On*: 1. Change **Turn services** to *Off*and **Save** 2. Edit the port number/range 3. Change **Turn services** to *On*and **Save** This is because changes to the port numbers do not come into effect until the **TURN services** are restarted.
Delegated credential checking	Controls whether the credential checking of TURN server requests is delegated, via a traversal zone, to another VCS. The associated **Authentication realm** determines which traversal zone is used. *Off*: use the relevant credential checking mechanisms (local database or H.350 directory via LDAP) on the VCS performing the authentication challenge. *On*: delegate the credential checking to a traversal client. The default is *Off*.	See delegated credential checking for more information.
Authentication realm	This is the realm sent by the server in its authentication challenges. ■ When **Delegated credential checking** is *Off*, this is a free-form text field. ■ When **Delegated credential checking** is *On*, you choose from the set of configured SIP domains. The chosen domain also determines the traversal zone through which credential checking is delegated.	When **Delegated credential checking** is *Off*, ensure that the client's credentials are stored in the relevant device authentication database.
Media port range start / end	The lower and upper port in the range used for the allocation of TURN relays. The default TURN relay media port range of 24000 – 29999 applies to new installations of X8.1 or later. The previous default range of 60000 – 61799 still applies to earlier releases that have upgraded to X8.1.	

TURN server status

A summary of the TURN server status is displayed at the bottom of the **TURN** page. When the TURN server is active, the summary also displays the number of active TURN clients and the number of active relays.

Click on the active relay links to access the TURN relay usage page, which lists all the currently active TURN relays on the VCS. You can also review further details of each TURN relay including permissions, channel bindings and counters.

Unified Communications

This section describes how to configure the VCS Control and VCS Expressway for Unified Communications functionality, a core part of the Cisco Collaboration Edge Architecture:

Mobile and remote access 66
External XMPP federation 75
Cisco Jabber Guest 86
Configuring a secure traversal zone connection for Unified Communications 96
Server certificate requirements for Unified Communications 99

Mobile and remote access

This section describes how to configure your VCS to support Unified Communications mobile and remote access.

Mobile and remote access overview

Cisco Unified Communications mobile and remote access is a core part of the Cisco Collaboration Edge Architecture. It allows endpoints such as Cisco Jabber to have their registration, call control, provisioning, messaging and presence services provided by Cisco Unified Communications Manager (Unified CM) when the endpoint is not within the enterprise network. The VCS provides secure firewall traversal and line-side support for Unified CM registrations.

The overall solution provides:

- **Off-premises access**: a consistent experience outside the network for Jabber and EX/MX/SX Series clients
- **Security**: secure business-to-business communications
- **Cloud services**: enterprise grade flexibility and scalable solutions providing rich WebEx integration and Service Provider offerings
- **Gateway and interoperability services**: media and signaling normalization, and support for non-standard endpoints

Figure 3: Unified Communications: mobile and remote access

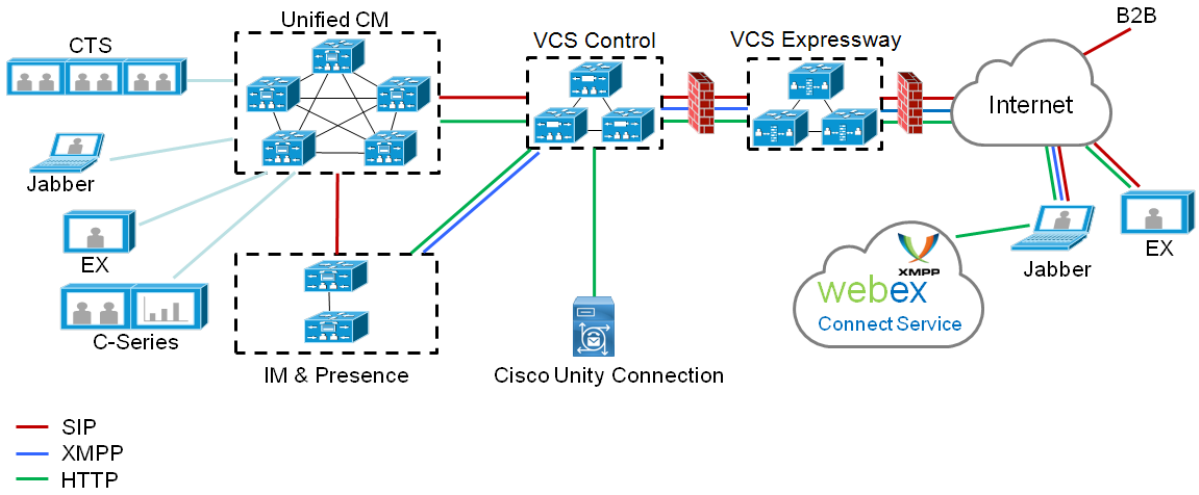

Note that third-party SIP or H.323 devices can register to the VCS Control and, if necessary, interoperate with Unified CM-registered devices over a SIP trunk.

Figure 4: Typical call flow: signaling and media paths

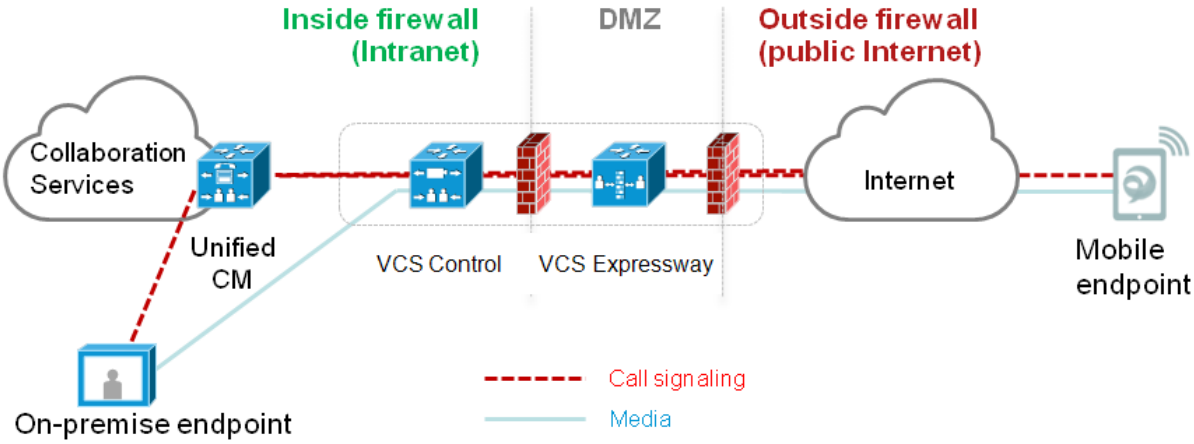

- Unified CM provides call control for both mobile and on-premises endpoints.
- Signaling traverses the Expressway solution between the mobile endpoint and Unified CM.
- Media traverses the Expressway solution and is relayed between endpoints directly; all media is encrypted between the VCS Control and the mobile endpoint.

Jabber client connectivity without VPN

The mobile and remote access solution supports a hybrid on-premises and cloud-based service model, providing a consistent experience inside and outside the enterprise. It provides a secure connection for Jabber application traffic without having to connect to the corporate network over a VPN. It is a device and operating system agnostic solution for Cisco Jabber clients on Windows, Mac, iOS and Android platforms.

It allows Jabber clients that are outside the enterprise to:

- use instant messaging and presence services
- make voice and video calls
- search the corporate directory
- share content
- launch a web conference
- access visual voicemail

Note that Jabber Web and Cisco Jabber Video for TelePresence (Jabber Video) are not supported.

Configuring mobile and remote access on VCS

This section describes the steps required to enable and configure mobile and remote access features on VCS Control and VCS Expressway, and how to discover the Unified CM servers and IM&P servers used by the service.

Installing VCS security certificates and setting up a secure traversal zone

To support Unified Communications features (such as mobile and remote access or Jabber Guest), there must be a Unified Communications traversal zone connection between the VCS Control and the VCS

Expressway. This involves:

- Installing suitable security certificates on the VCS Control and the VCS Expressway.
- Configuring a Unified Communications traversal zone between the VCS Control and the VCS Expressway

For information about how to do this, see:

- Configuring a secure traversal zone connection for Unified Communications [p.96] (if your system does not already have a secure traversal zone in place)
- Server certificate requirements for Unified Communications [p.99]

Note that if XMPP federation is to be used, the IM&P servers need to be discovered on the VCS Control for all the relevant information to be available when generating certificate signing requests.

Setting up the VCS Control

This section describes the configuration steps required on the VCS Control.

Configuring DNS and NTP settings

Check and configure the basic system settings on VCS:

1. Ensure that **System host name** and **Domain name** are specified (**System > DNS**).
2. Ensure that local DNS servers are specified (**System > DNS**).
3. Ensure that all VCS systems are synchronized to a reliable NTP service (**System > Time**). Use an **Authentication** method in accordance with your local policy.

If you have a cluster of VCSs you must do this for every peer.

Enabling the VCS Control for mobile and remote access

To enable mobile and remote access functionality:

1. Go to **Configuration > Unified Communications > Configuration**.
2. Set **Unified Communications mode** to *Mobile and remote access*.
3. Click **Save**.

Note that you must select *Mobile and remote access* before you can configure the relevant domains and traversal zones.

Configuring the domains to route to Unified CM

You must configure the domains for which registration, call control, provisioning, messaging and presence services are to be routed to Unified CM.

1. On VCS Control, go to **Configuration > Domains**.
2. Select the domains (or create a new domain, if not already configured) for which services are to be routed to Unified CM.
3. For each domain, turn *On* the services for that domain that VCS is to support. The available services are:
   - **SIP registrations and provisioning on VCS**: the VCS is authoritative for this SIP domain. The VCS acts as a SIP registrar and Presence Server for the domain, and accepts registration requests for any SIP endpoints attempting to register with an alias that includes this domain. The default is *On*.

- **SIP registrations and provisioning on Unified CM**: endpoint registration, call control and provisioning for this SIP domain is serviced by Unified CM. The VCS acts as a Unified Communications gateway to provide secure firewall traversal and line-side support for Unified CM registrations. The default is *Off*.
- **IM and Presence services on Unified CM**: instant messaging and presence services for this SIP domain are provided by the Unified CM IM and Presence service. The default is *Off*.
- **XMPP federation**: enables XMPP federation between this domain and partner domains. The default is *Off*.

Turn *On* all of the applicable services for each domain. For example, the same domain may be used by endpoints such as Jabber or EX Series devices that require line-side Unified Communications support, and by other endpoints such as third-party SIP or H.323 devices that require VCS support. (In this scenario, the signaling messages sent from the endpoint indicate whether line-side unified communications or VCS support is required.)

Discovering IM&P and Unified CM servers

The VCS Control must be configured with the address details of the IM&P servers and Unified CM servers that are to provide registration, call control, provisioning, messaging and presence services.

Note that IM&P server configuration is not required in the hybrid deployment model.

Uploading the IM&P / Unified CM tomcat certificate to the VCS Control trusted CA list

If you intend to have **TLS verify mode** set to *On* (the default and recommended setting) when discovering the IM&P and Unified CM servers, the VCS Control must be configured to trust the tomcat certificate presented by those IM&P and Unified CM servers.

1. Determine the relevant CA certificates to upload:
   - If the servers are using self-signed certificates, the VCS Control's trusted CA list must include a copy of the tomcat certificate from every IM&P / Unified CM server.
   - If the servers are using CA-signed certificates, the VCS Control's trusted CA list must include the root CA of the issuer of the tomcat certificates.
2. Upload the trusted Certificate Authority (CA) certificates to the VCS Control (**Maintenance > Security certificates > Trusted CA certificate**).
3. Restart the VCS Control for the new trusted CA certificates to take effect (**Maintenance > Restart options**).

Configuring IM&P servers

To configure the IM&P servers used for remote access:

1. On VCS Control, go to **Configuration > Unified Communications > IM and Presence servers**. The resulting page displays any existing servers that have been configured.
2. Add the details of an IM&P publisher:
   a. Click **New**.
   b. Enter the **IM and Presence publisher address** and the **Username** and **Password** credentials required to access the server. The address can be specified as an FQDN or as an IP address; we recommend using FQDNs when **TLS verify mode** is *On*.
   Note that these credentials are stored permanently in the VCS database. The IM&P user must have the *Standard AXL API Access* role.
   c. We recommend leaving **TLS verify mode** set to *On* to ensure VCS verifies the tomcat certificate

presented by the IM&P server for XMPP-related communications.
    - If the IM&P server is using self-signed certificates, the VCS Control's trusted CA list must include a copy of the tomcat certificate from every IM&P server.
    - If the IM&P server is using CA-signed certificates, the VCS Control's trusted CA list must include the root CA of the issuer of the tomcat certificate.
  d. Click **Add address**.
  The system then attempts to contact the publisher and retrieve details of its associated nodes.
  Note that the status of the IM&P server will show as **Inactive** until a valid traversal zone connection between the VCS Control and the VCS Expressway has been established (this is configured later in this process).
3. Repeat for every IM&P cluster.

After configuring multiple publisher addresses, you can click **Refresh servers** to refresh the details of the nodes associated with selected addresses.

Configuring Unified CM servers

To configure the Unified CM servers used for remote access:

1. On VCS Control, go to **Configuration > Unified Communications > Unified CM servers**.
   The resulting page displays any existing servers that have been configured.
2. Add the details of a Unified CM publisher:
   a. Click **New**.
   b. Enter the **Unified CM publisher address** and the **Username** and **Password** credentials of an application user account that can access the server. The address can be specified as an FQDN or as an IP address; we recommend using FQDNs when **TLS verify mode** is *On*.
   Note that these credentials are stored permanently in the VCS database. The Unified CM user must have the *Standard AXL API Access* role.
   c. We recommend leaving **TLS verify mode** set to *On* to ensure VCS verifies the certificates presented by the Unified CM server (its tomcat certificate for AXL and UDS queries, and its CallManager certificate for subsequent SIP traffic).
      - If the Unified CM server is using self-signed certificates, the VCS Control's trusted CA list must include a copy of the tomcat certificate and the CallManager certificate from every Unified CM server.
      - If the Unified CM server is using CA-signed certificates, the VCS Control's trusted CA list must include the root CA of the issuer of the tomcat certificate and the CallManager certificate.
   d. Click **Add address**.
   The system then attempts to contact the publisher and retrieve details of its associated nodes.
3. Repeat for every Unified CM cluster.

After configuring multiple publisher addresses, you can click **Refresh servers** to refresh the details of the nodes associated with selected addresses.

Automatically generated zones and search rules

VCS Control automatically generates non-configurable neighbor zones between itself and each discovered Unified CM node. A TCP zone is always created, and a TLS zone is created also if the Unified CM node is configured with a **Cluster Security Mode** (**System > Enterprise Parameters > Security Parameters**) of *1 (Mixed)* (so that it can support devices provisioned with secure profiles). The TLS zone is configured with its **TLS verify mode** set to *On* if the Unified CM discovery had **TLS verify mode** enabled. This means that the

VCS Control will verify the CallManager certificate for subsequent SIP communications. Each zone is created with a name in the format 'CEtcp-<node name>' or 'CEtls-<node name>'.

A non-configurable search rule, following the same naming convention, is also created automatically for each zone. The rules are created with a priority of 45. If the Unified CM node that is targeted by the search rule has a long name, the search rule will use a regex for its address pattern match.

Note that load balancing is managed by Unified CM when it passes routing information back to the registering endpoints.

Configuring the HTTP server allow list (whitelist) on VCS Control

Jabber client endpoints may need to access additional web services inside the enterprise. This requires an "allow list" of servers to be configured to which the VCS will grant access for HTTP traffic originating from outside the enterprise.

The features and services that may be required, and would need whitelisting, include:

- Visual Voicemail
- Jabber Update Server
- Custom HTML tabs / icons
- Directory Photo Host

To configure the set of addresses to which HTTP access will be allowed:

1. On VCS Control, go to **Configuration > Unified Communications > Configuration**.
2. Click **HTTP server allow list**.
3. Configure the hostnames or IP addresses of an HTTP server that a Jabber client located outside of the enterprise is allowed to access.
   Access is granted if the server portion of the client-supplied URI matches one of the names entered here, or if it resolves via DNS lookup to a specified IP address.

The IP addresses of all discovered Unified CM nodes (that are running the CallManager or TFTP service) and IM&P nodes are added automatically to the allow list and cannot be deleted. These addresses are displayed in the **Auto-configured allow list** section of the **HTTP server allow list** page.

Setting up the VCS Expressway

This section describes the configuration steps required on the VCS Expressway.

Configuring DNS and NTP settings

Check and configure the basic system settings on VCS:

1. Ensure that **System host name** and **Domain name** are specified (**System > DNS**).
   Note that <**System host name**>.<**Domain name**> is the FQDN of this VCS Expressway. Ensure that this FQDN is resolvable in public DNS.
2. Ensure that public DNS servers are specified (**System > DNS**).
3. Ensure that all VCS systems are synchronized to a reliable NTP service (**System > Time**). Use an **Authentication** method in accordance with your local policy.

If you have a cluster of VCSs you must do this for every peer.

Enabling the VCS Expressway for mobile and remote access

To enable mobile and remote access functionality:

1. Go to **Configuration > Unified Communications > Configuration**.
2. Set **Unified Communications mode** to *Mobile and remote access*.
3. Click **Save**.

Ensuring that TURN services are disabled on VCS Expressway

You must ensure that TURN services are disabled on the VCS Expressway used for mobile and remote access.

1. Go to **Configuration > Traversal > TURN**.
2. Ensure that **TURN services** are *Off*.

Checking the status of Unified Communications services

You can check the status of the Unified Communications services on both VCS Control and VCS Expressway.

1. Go to **Status > Unified Communications**.
2. Review the list and status of domains, zones and (VCS Control only) Unified CM and IM&P servers. Any configuration errors will be listed along with links to the relevant configuration page from where you can address the issue.

Mobile and remote access port reference

This section summarizes the ports that need to be opened on the firewalls between your internal network (where the VCS Control is located) and the DMZ (where the VCS Expressway is located) and between the DMZ and the public internet.

Outbound from VCS Control (private) to VCS Expressway (DMZ)

Purpose	Protocol	VCS Control (source)	VCS Expressway (listening)
XMPP (IM and Presence)	TCP	Ephemeral port	7400
SSH (HTTP/S tunnels)	TCP	Ephemeral port	2222
Traversal zone SIP signaling	TLS	25000 to 29999	7001
Traversal zone SIP media (for small/medium systems on X8.1 or later)	UDP	36000 to 59999*	36000 (RTP), 36001 (RTCP) (defaults) 2776 (RTP), 2777 (RTCP) (old defaults*)
Traversal zone SIP media (for large systems)	UDP	36000 to 59999*	36000 to 36011 (6 pairs of RTP and RTCP ports for multiplexed media traversal)

Outbound from VCS Expressway (DMZ) to public internet

Purpose	Protocol	VCS Expressway (source)	Internet endpoint (listening)
SIP media	UDP	36002 to 59999 or 36012 to 59999	>= 1024
SIP signaling	TLS	25000 to 29999	>= 1024

Inbound from public internet to VCS Expressway (DMZ)

Purpose	Protocol	Internet endpoint (source)	VCS Expressway (listening)
XMPP (IM and Presence)	TCP	>= 1024	5222
HTTP proxy (UDS)	TCP	>= 1024	8443
Media	UDP	>= 1024	36002 to 59999 or 36012 to 59999*
SIP signaling	TLS	>= 1024	5061
HTTPS (administrative access)	TCP	>= 1024	443

From VCS Control to Unified CM / CUC

Purpose	Protocol	VCS Control (source)	Unified CM (listening)
XMPP (IM and Presence)	TCP	Ephemeral port	7400 (IM and Presence)
HTTP proxy (UDS)	TCP	Ephemeral port	8443 (Unified CM)
HTTP proxy (SOAP)	TCP	Ephemeral port	8443 (IM and Presence Service)
HTTP (configuration file retrieval)	TCP	Ephemeral port	6970
CUC (voicemail)	TCP	Ephemeral port	443 (CUC)
Media	UDP	36000 to 59999*	>= 1024
SIP signaling	TCP	25000 to 29999	5060
Secure SIP signaling	TLS	25000 to 29999	5061

* On new installations of X8.1 or later, the default media traversal port range is 36000 to 59999, and is set on the VCS Control (**Configuration > Local Zones > Traversal Subzone**). In Large VCS Expressway systems the first 12 ports in the range – 36000 to 36011 by default – are always reserved for multiplexed traffic. The VCS Expressway listens on these ports. You cannot configure a distinct range of demultiplex listening ports on Large systems: they always use the first 6 pairs in the media port range. On Small/Medium systems you can explicitly specify which 2 ports listen for multiplexed RTP/RTCP traffic, on the VCS Expressway (**Configuration > Traversal > Ports**). On upgrades to X8.2 or later, the VCS Control retains the media traversal port range from the previous version (could be 50000 - 54999 or 36000 - 59999, depending on source version). The VCS Expressway retains the previously configured demultiplexing pair (either 2776 & 2777 or 50000 & 50001 by default, depending on upgrade path) and the switch **Use configured demultiplexing ports** is set to *Yes*. If you do not want to use a particular pair of ports, switch **Use configured demultiplexing ports** to *No*, then the VCS Expressway will listen on the first pair of ports in the

media traversal port range (36000 and 36001 by default). In this case, we recommend that you close the previously configured ports after you configure the firewall for the new ports.

Note that:

- Ports 8191/8192 TCP and 8883/8884 TCP are used internally within the VCS Control and the VCS Expressway applications. Therefore these ports must not be allocated for any other purpose. The VCS Expressway listens externally on port 8883; therefore we recommend that you create custom firewall rules on the external LAN interface to drop TCP traffic on that port.
- The VCS Expressway listens on port 2222 for SSH tunnel traffic. The only legitimate sender of such traffic is the VCS Control (cluster). Therefore we recommend that you create the following firewall rules for the SSH tunnels service:
  - one or more rules to allow all of the VCS Control peer addresses (via the internal LAN interface, if appropriate)
  - followed by a lower priority (higher number) rule that drops all traffic for the SSH tunnels service (on the internal LAN interface if appropriate, and if so, another rule to drop all traffic on the external interface)

External XMPP federation

This section describes how to configure your VCS to support external XMPP federation.

Deploying VCS for external XMPP federation

External XMPP federation enables users registered to Unified CM IM & Presence to communicate via the VCS Expressway with users from a different XMPP deployment.

The following diagram shows how XMPP messages are routed from your on-premises IM & Presence server via the VCS Control and VCS Expressway Collaboration Edge solution to the federated XMPP server. It also shows the ports and connections that are used as the messages traverse DMZ firewalls.

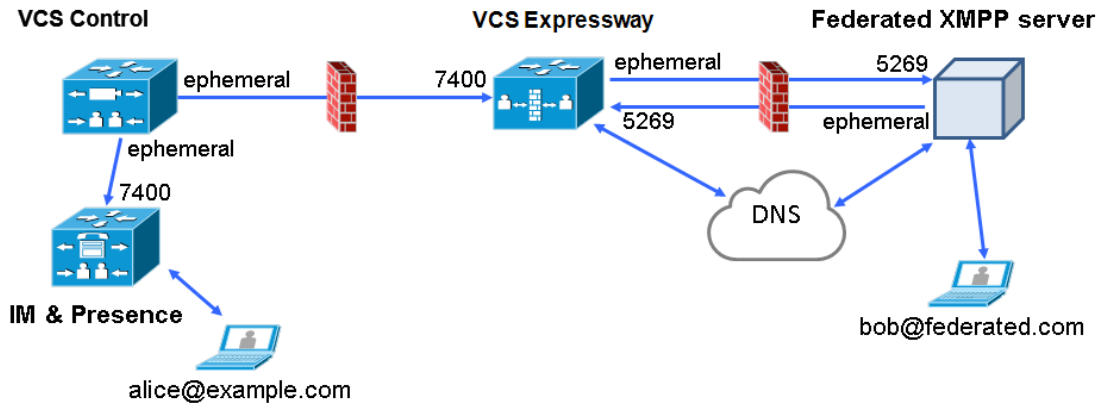

Supported systems

- VCS Expressway supports XMPP federation with:
  - Cisco Unified Communications Manager IM and Presence Service 9.1.1 or later
  - Cisco Webex Connect Release 6.x
  - other XMPP standards-compliant servers
- Cisco Jabber 9.7 or later
- VCS Expressway does not support XMPP address translation (of email addresses, for example). External systems must federate with the Jabber IDs that are native to Unified CM IM & Presence.
  You can make the user's Unified CM IM&P Jabber ID resemble the user's email address, so that the federated partner can use email addresses for federation, by:
  - setting the Unified CM LDAP attribute for User ID to be the user's sAMAccountName
  - setting the Unified CM IM&P presence domain to be the same as the email domain
- Simultaneous internal federation managed by Unified CM IM&P and external federation managed by VCS is not supported. If only internal federation is required then you must use Interdomain Federation on Unified CM IM&P. The available federation deployment configuration options are:
  - External federation only (managed by VCS)
  - Internal federation only (managed by Unified CM IM&P)
  - Internal and external federation managed by Unified CM IM&P, but requires configuring your firewall to allow inbound connections

  For more information see *Interdomain Federation for IM and Presence Service on Cisco Unified Communications Manager*.

For information about configuring your system for external XMPP federation, see:

- Configuring VCS for external XMPP federation [p.76]
- DNS SRV records for XMPP federation [p.80]
- Port usage for XMPP federation [p.81]
- Checking XMPP federation status [p.82]
- Troubleshooting external XMPP federation [p.82]

Configuring VCS for external XMPP federation

This section takes you through the steps required to configure your VCS for external XMPP federation.

Prerequisites

Ensure that you are running the following software versions:

- VCS X8.2 or later
- Unified CM IM & Presence 9.1.1 or later

Note that XMPP federation can only be supported on a single VCS cluster.

Before configuring your VCS system for external XMPP federation:

- Ensure that Interdomain XMPP Federation has been **disabled** on Unified CM IM and Presence:
  Go to **Cisco Unified CM IM and Presence Administration > Presence > Inter Domain Federation > XMPP Federation > Settings** and ensure that **XMPP Federation Node Status** is set to *Off*.
  You must disable Interdomain Federation on Unified CM IM&P before enabling XMPP federation on VCS.
- A VCS Control (cluster) and VCS Expressway (cluster) have been configured for Mobile and Remote Access to Unified Communications services, as described in *Mobile and Remote Access via Cisco VCS Deployment Guide*. If only XMPP federation is required (video calls and remote registration to Unified CM are not required), the following items do not have to be configured:
  - domains that support *SIP registrations and provisioning on Unified CM* or that support *IM and Presence services on Unified CM*
  - Unified CM servers (you must still configure the IM&P servers)
  - HTTP server allow list

  Note that federated communications are available to both on-premises clients (connected directly to Unified CM IM&P) and off-premises clients (connected to Unified CM IM&P via mobile and remote access).
- If you intend to use both TLS and group chat, the VCS Control and VCS Expressway server certificates must include in their list of subject alternate names (using either XMPPAddress or DNS formats) the **Chat Node Aliases** that are configured on the IM&P servers. Note that the VCS Control automatically includes the chat node aliases in its certificate signing requests (CSRs), providing it has discovered a set of IM&P servers. When generating CSRs for the VCS Expressway we recommend that you copy-paste the chat node aliases from the equivalent **Generate CSR** page on the VCS Control.
  See Server certificate requirements for Unified Communications [p.99] for more information.

Configuring local domains for XMPP federation on VCS Control

You must configure your local domain names for which you want to provide XMPP federated services.

1. On VCS Control, go to **Configuration > Domains**.
2. Click **New** (or click **View/Edit** if the required domain already exists).

3. Enter your local **Domain name** to be federated.
4. Set **XMPP federation** to *On*.
5. Click **Save**.
6. Repeat for any other local domains requiring federation.

Configuring VCS Expressway for XMPP federation

We recommend that XMPP federation configuration changes are made 'out of hours'. Enabling XMPP federation will restart the XCP router on all VCS Expressway systems within the cluster. This will temporarily interrupt any existing mobile and remote access IM&P client sessions. Depending on the number of clients, full client reconnection may take several minutes. (See Impact of configuration changes on a live system [p.84] for more information.)

1. On VCS Expressway, go to **Configuration > Unified Communications**.
2. Set **XMPP federation support** to *On*.
   When you apply this change, you may need to restart the XCP Routers on the IM&P server(s). The other settings on this page will not require a restart.
3. Configure the remaining fields as follows:

Use static routes	Indicates whether a controlled list of static routes are used to locate the federated XMPP domains and chat node aliases, rather than DNS lookups. See Configuring how XMPP servers for federated domains and chat node aliases are located [p.79] below.
Dialback secret	Enter the dialback secret to use for identity verification with federated XMPP servers. If you have multiple VCS Expressway systems in the same deployment, they must all be configured with the same dialback secret. For more information about server dialback, see http://xmpp.org/extensions/xep-0220.html.
Security mode	Indicates if a TLS connection to federated XMPP servers is required, preferred or not required. *TLS required*: the system guarantees a secure (encrypted) connection with the foreign domain. *TLS optional*: the system attempts to establish a TLS connection with the foreign domain. If it fails to establish a TLS connection, it reverts to TCP. *No TLS*: the system will not establish a TLS connection with the foreign domain. It uses a non-encrypted connection to federate with the foreign domain. In all cases, server dialback is used to verify the identity of the foreign server. The foreign server must be configured to use server dialback. Note that SASL External is not a supported configuration on the local server. Foreign servers may be configured to use SASL, but SASL exchanges will not be supported by the local server. The default, and recommended setting, is *TLS required*.
Require client-side security certificates	Controls whether the certificate presented by the external client is verified against the VCS's current trusted CA list and, if loaded, the revocation list. This setting does not apply if **Security mode** is *No TLS*. Note that the federated domain name and any chat node aliases must be present in the certificate's subject alternate name, regardless of this setting.

Privacy mode	Controls whether restrictions are applied to the set of federated domains and chat node aliases. *Off*: No restrictions are applied. *Allow list*: Federation is allowed only with the domains and chat node aliases specified in the allow list. *Deny list*: Federation is allowed with any domain or chat node alias except for those specified in the deny list. Note that any domains or chat node aliases that are configured as static routes are included automatically in the allow list. The default is *Allow list*. See Configuring the allow and deny lists for federated domains and chat node aliases [p.79] below.

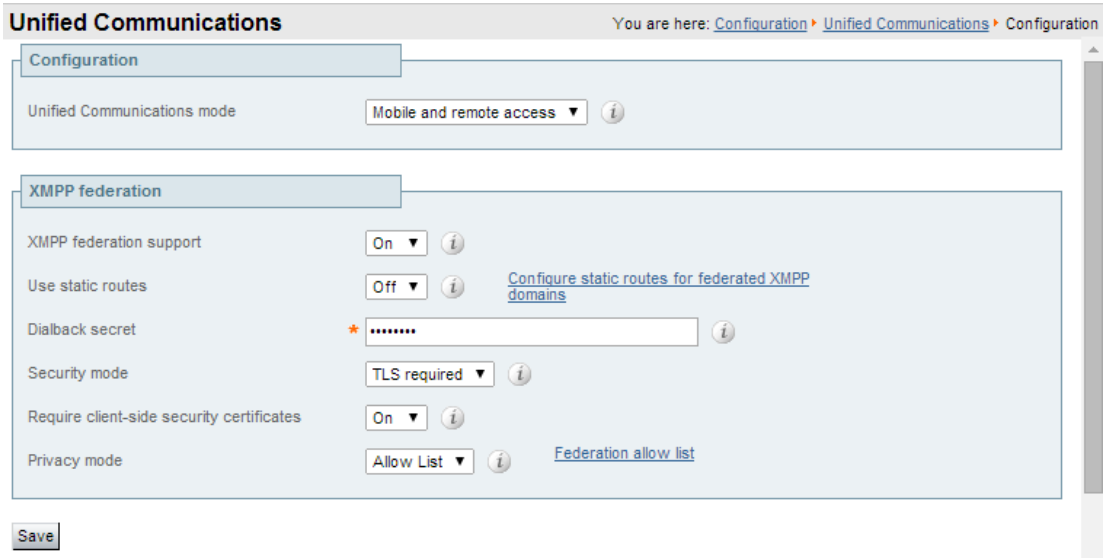

4. Click **Save**
   Your changes are applied. If you toggled **XMPP federation support**, you will be required to confirm that you want to restart the XCP router on the VCS Control.
   You may also need to restart the Unified CM IM&P XCP router services that are connected to the associated VCS Control.
5. Log on to each IM and Presence server to check for notifications that you need to restart the XCP Routers. If you do need to restart them:
   a. In **Cisco Unified IM and Presence Serviceability**, go to **Tools > Control Center - Network Services**.
   b. Scroll down to the **IM and Presence Services** section and select **Cisco XCP Router**.
   c. Click **Restart**.
      This causes a restart of all XCP services on the IM and Presence Service.
      The service restart may take several minutes.
   d. Repeat on each IM and Presence server.
   You could use the `utils service` CLI option (accessed via the Cisco Unified IM and Presence Operating System) to restart the services instead.

Configuring how XMPP servers for federated domains and chat node aliases are located

You can use DNS lookups to locate the XMPP servers for federated domains and chat node aliases, or you can configure the addresses of specific XMPP servers.

To use DNS lookups:

1. On VCS Expressway, go to **Configuration > Unified Communications**.
2. Set **Use static routes** to *Off*.
3. Click **Save**.

Note that all XMPP federated partners must publish in DNS the addresses of their XMPP servers as described in DNS SRV records for XMPP federation [p.80].

To use static routes:

1. If you want to use static routes for group chat, you must contact the partners with whom you are federating to get a list of their chat node aliases.
2. On VCS Expressway, go to **Configuration > Unified Communications**.
3. Set **Use static routes** to *On* and click **Save**.
4. Click **Configure static routes for federated XMPP domains**.
5. On the **Federated static routes** page, click **New**.
6. Enter the details of the static route:

Domain	The federated XMPP domain or chat node alias.
Address	The IP address or Fully Qualified Domain Name (FQDN) of an XMPP server for this federated domain or chat node alias.

7. Click **Save**.
8. Add as many additional static routes as required.
   You can specify additional routes to alternative addresses for the same domain or chat node alias (all routes have an equal priority).

Note that:

- If there are no static routes defined for a federated domain or chat node alias, the system will use DNS instead.
- If static routes are defined for the federated domain or chat node alias, but the remote system cannot be contacted over those routes, the system will not fall back to DNS.
- If **Privacy mode** is set to *Allow list* and **Use static routes** is *On*, any domains (or chat node aliases) that are configured as static routes are included automatically in the allow list.

Configuring the allow and deny lists for federated domains and chat node aliases

The allow and deny lists are used to control restrictions to the set of federated domains and chat node aliases. If **Privacy mode** is set to *Allow list* or *Deny list*, you must add the domains and chat node aliases with which you want to allow or deny federated connections.

This function manages restrictions at the domain / chat node alias level. Individual user-based privacy is controlled by each client / end-user.

The allow list and deny list modes are mutually exclusive. A domain/alias cannot be allowed and denied at the same time.

When federation is first enabled, **Privacy mode** is set to *Allow list* by default. In effect this puts the system in a 'lockdown' mode — you will not be allowed to connect with any federated domains or chat node aliases until you either add them to the allow list, configure static routes, or change the **Privacy mode** setting.

1. On VCS Expressway, go to **Configuration > Unified Communications**.
2. Set **Privacy mode** as appropriate:
   - *Off*: No restrictions are applied.
   - *Allow list*: Federation is allowed only with the domains and chat node aliases specified in the allow list.
   - *Deny list*: Federation is allowed with any domain or chat node alias except for those specified in the deny list.
3. Click **Save**.
4. To manage the domains and chat node aliases in the allow or deny lists, click either **Federation allow list** or **Federation deny list** as appropriate.
   In the resulting page you can add, modify or delete the items in the allow/deny list. Wildcards or regexes are not allowed in the names; it must be an exact match.

All domains and chat node aliases that are configured as static routes are included automatically in the allow list.

DNS SRV records for XMPP federation

If federating parties are **not** using static routes to access federated XMPP services, suitable DNS SRV records must be published.

_xmpp-server records

You must publish an **`_xmpp-server`** DNS SRV record in DNS for your local domain so that remote enterprises can access your federated XMPP services. For example:

Domain	Service	Protocol	Priority	Weight	Port	Target host
example.com	xmpp-server	tcp	0	0	5269	vcse.example.com

Similarly, to allow federating parties to discover a particular XMPP federated domain (if they are not using static routes), the federated enterprise must publish an **`_xmpp-server`** DNS SRV record in its public DNS server. For example:

Domain	Service	Protocol	Priority	Weight	Port	Target host
federated.com	xmpp-server	tcp	0	0	5269	xmppserver.federated.com

All enterprises must publish the service on port 5269. The published FQDNs must also be resolvable in DNS to an IP address.

Group Chat

If you configure the Group Chat feature on a Unified CM IM&P server in an XMPP federation deployment, you must publish DNS SRV records for the federated chat node aliases.

To allow IM and Presence Service to discover a particular XMPP federated chat node alias, the federated enterprise must publish an **`_xmpp-server`** DNS SRV record in its public DNS server. Similarly, IM and Presence Service must publish the same DNS SRV record in DNS for its domain. For example:

Domain	Service	Protocol	Priority	Weight	Port	Target host
chatroom1.example.com	xmpp-server	tcp	0	0	5269	vcse.example.com

Both enterprises must publish the service on port 5269. The published FQDN must also be resolvable to an IP address in DNS.

Alternatively, to use group chat aliases on federated servers, you can configure static routes on the VCS Expressway (**Configuration > Unified Communications > Federated static routes**) for each chat node alias.

Note that:

- The chat node aliases are configured on Unified CM IM&P Administration (**Messaging > Group Chat Server Alias Mapping**).
- Internal users do not need to use DNS to discover chat nodes; they get the chat room details from their local IM&P servers.

See *Chat configuration on IM and Presence* for more information about point-to-point instant messaging and group chat.

Port usage for XMPP federation

This section summarizes the firewall ports that need to be opened for XMPP federation.

Outbound from VCS Control (private) to VCS Expressway (DMZ)

Purpose	Protocol	VCS Control (source)	VCS Expressway (listening)
XMPP	TCP	Ephemeral port	7400

Outbound from VCS Expressway (DMZ) to public internet

Purpose	Protocol	VCS Expressway (source)	Federated XMPP server (listening)
XMPP	TCP	Ephemeral port	5269

Inbound from public internet to VCS Expressway (DMZ)

Purpose	Protocol	Federated XMPP server (source)	VCS Expressway (listening)
XMPP	TCP	Ephemeral port	5269

From VCS Control to IM and Presence Server

Purpose	Protocol	VCS Control (source)	IM and Presence Server (listening)
XMPP	TCP	Ephemeral port	7400

Checking XMPP federation status

XMPP federation status information is available on the VCS Expressway only.

You can go to **Status > Unified Communications** to check the primary status of the XMPP federation service. Normally, **XMPP Federation** should be *Active*.

If there are problems with the service, such as connectivity issues with the VCS Control, the status will show as *Inactive*. In this case, you should also review the Unified Communications status page on the associated VCS Control for more guidance as to what is causing the problem.

Viewing federated connections

To view the current federated connections being managed by the VCS Expressway:

1. On the VCS Expressway, go to **Status > Unified Communications**.
2. Click **View federated connections** in the **Advanced status information** section.
   This shows all the current connections passing through that VCS Expressway.
   It displays the IP **Address** of the client, and the **Direction** (*Incoming* or *Outgoing*) of the communication.
   Connections are closed after 10 minutes of inactivity.

Note that in clustered systems:

- An aggregated view is not displayed; only connections routed through the current peer are displayed.
- In 2-way connections, the inbound and outbound communications may be managed by different peers.

Troubleshooting external XMPP federation

This section describes how to troubleshoot your external XMPP federation deployment and describes the impact of making configuration changes on a live system.

Checking the basic status of your system

If you encounter issues with the XMPP federation status service, you should first check the **Status > Unified Communications** page on both the VCS Control and the VCS Expressway.

This will highlight any basic connection or configuration problems and provide information and links to help correct the problem.

General configuration checklist

Ensure that the following VCS configuration items have been specified correctly:

- Port 5269 is open in both directions between the internet and VCS Expressway in the DMZ.
- DNS settings: host name, domain name and default DNS server (**System > DNS**).

- An accessible NTP server (**System > Time**).
- An active Unified Communications traversal zone on the VCS Control and its associated VCS Expressway (**Status > Zones**).
- **Unified Communications mode** is set to *Mobile and remote access* on both the VCS Control and the VCS Expressway (**Configuration > Unified Communications > Configuration**).
- **XMPP federation support** is *On* on the VCS Expressway (**Configuration > Unified Communications > Configuration**).
- If static routes are enabled, ensure that the appropriate routes for the federated XMPP domains have been added to the VCS Expressway (**Configuration > Unified Communications > Federated static routes**).
- At least one domain is configured on the VCS Control with **XMPP federation** set to *On* (**Configuration > Domains**).
- IM &Presence servers have been discovered on the VCS Controland have an active status (**Configuration > Unified Communications > IM and Presence servers**).

Discovery, connectivity and firewall issues

- If using DNS lookup, check that _xmpp-server public DNS records exist for the domains and chat node aliases of all federated parties, and that they use port 5269.
- Check that port 5269 is open in both directions between the internet and VCS Expressway in the DMZ.
- If the VCS Control cannot connect to XCP on the VCS Expressway remote host:
  - Check that the firewall has not blocked port 7400.
  - If the VCS Expressway is running dual network interfaces, ensure that the traversal zone on the VCS Control is connected to the internally-facing interface on the VCS Expressway.
- Be aware that inbound and outbound connections can be routed through different cluster peers.

Certificates and secure TLS connections

If you have configured secure TLS connections, ensure that:

- Valid server certificates are installed, they are in date and not revoked.
- Both the remote and local server certificates must contain a valid domain in the Subject Alternative Name (SAN). This applies even if **Require client-side security certificates** is disabled.
- If **Require client-side security certificates** is enabled, ensure that the server certificate is signed by a CA and is not locally signed.
- Certificate Authority (CA) certificates are installed.
- If you are using group chat over TLS, ensure that the VCS Control and VCS Expressway server certificates include in their list of subject alternate names (using either XMPPAddress or DNS formats) all of the **Chat Node Aliases** that are configured on the IM and Presence servers.
- Ensure that compatible security settings (TLS required, optional, no TLS) exist on your system and the remote federated system.

See Server certificate requirements for Unified Communications [p.99] for more information.

Checking the Event Log

Check the Event Log on the VCS Expressway for XMPP events.

Events related to XMPP federation are tagged with `Module="XMPPFederation"`. There are no XMPP-related logs on the VCS Control.

Performing diagnostic logging

When performing diagnostic logging (**Maintenance > Diagnostics > Diagnostic logging**), set the **develop.xcp.federation** support log (**Maintenance > Diagnostics > Advanced > Support Log configuration**) to debug level.

Disabling Interdomain XMPP Federation on Unified CM IM&P

You must not enable both Interdomain XMPP Federation on Unified CM IM&P and XMPP federation on VCS Expressway. One symptom of this incorrect configuration is that some users will have one-way federation.

If Interdomain Federation is enabled on Unified CM IM&P, perform the following operations in exactly the order shown:

1. Disable Interdomain Federation on the IM&P servers:
   a. Go to **Cisco Unified CM IM and Presence Administration > Presence > Inter Domain Federation > XMPP Federation > Settings**.
   b. Set **XMPP Federation Node Status** to *Off*.
2. Refresh the set of discovered IM&P servers on VCS Control.
3. Restart all of the Unified CM IM&P XCP Router services that are connected to that VCS Control.

Impact of configuration changes on a live system

In general, we recommend that XMPP federation configuration changes are made 'out of hours'. This section describes the impact that configuration changes will have on current clients using XMPP federation and any Jabber clients using mobile and remote access.

VCS Control configuration changes

Domains

Any domain configuration changes, when one or more existing domains are configured for *IM and Presence services on Unified CM* or *XMPP Federation* will result in an automatic restart of the XCP router on both VCS Control and VCS Expressway.

The end-user impact is temporary loss of federation and any Jabber clients using mobile and remote access will be temporarily disconnected. The clients will automatically reconnect after a short period.

Unified Communications mode

Setting the **Unified Communications mode** to *Off* or to *Jabber Guest services*' will stop the the XCP router on both VCS Control and VCS Expressway.

- This will remove the VCS Expressway XMPP federation node from all discovered IM&P servers. A notification will appear on the IM&P administration interface to restart the XCP router on all affected IM&P nodes.
- The end-user impact is that all IM&P sessions will be disconnected. That is, there is a loss of federation, IM&P sessions over mobile and remote access will be disconnected, and sessions directly homed on the IM&P node will be dropped. When the XCP router is restarted on each IM&P node, all XCP functionality on that node will be disrupted.

Discovered IM & Presence Servers

Adding or deleting an IM & Presence publisher will require a restart of the XCP router on each IM & Presence node associated with that publisher only if **XMPP Federation** is enabled.

- This will cause a restart of the XCP router on VCS Control.
- The end-user impact should be minimal. They will be unable to send or receive IM & Presence updates for a few seconds.

VCS Expressway configuration changes

Unified Communications mode

Setting the **Unified Communications mode** to *Off* or to *Jabber Guest services*' will stop the the XCP router on both VCS Control and VCS Expressway.

- This will remove the VCS Expressway XMPP federation node from all discovered IM&P servers. A notification will appear on the IM&P administration interface to restart the XCP router on all affected IM&P nodes.
- The end-user impact is that all IM&P sessions will be disconnected. That is, there is a loss of federation, IM&P sessions over mobile and remote access will be disconnected, and sessions directly homed on the IM&P node will be dropped. When the XCP router is restarted on each IM&P node, all XCP functionality on that node will be disrupted.

Note that turning the **Unified Communications Mode** back to *On* will reinsert the XMPP federation node and have the same impact on the IM&P servers.

XMPP federation support

Changing the **XMPP federation support** setting will restart the VCS Expressway XCP router.

- This will result in the addition/removal of the VCS Expressway XMPP federation node from all discovered IM & Presence servers. A notification will appear on the IM&P administration interface to restart the XCP router on all affected IM&P nodes.
- The end-user impact is that all IM&P sessions will be disconnected. That is, there is a loss of federation, IM&P sessions over mobile and remote access will be disconnected, and sessions directly homed on the IM&P node will be dropped. When the XCP router is restarted on each IM&P node, all XCP functionality on that node will be disrupted.

Other XMPP federation settings

Changing any of the other XMPP federation settings, such as static routes, security and privacy settings, or the allow/deny lists, will only result in a restart of the XMPP Federation Connection Manager service on the VCS Expressway.

End-users may notice a temporary disruption to federation; any mobile and remote access IM&P sessions will remain connected.

Client reconnection times after loss of service

The time taken for a client to reconnect to the XMPP service depends on the re-login limits specified in the **Cisco Server Recovery Manager** service parameters on the IM&P server.

See the *High Availability Client Login Profiles* section in *Configuration and Administration of IM and Presence Service on Cisco Unified Communications Manager* for the IM&P version that you are running.

Cisco Jabber Guest

This section describes how to configure your VCS for Cisco Jabber Guest services.

Jabber Guest services overview

Cisco Jabber Guest is a consumer to business (C2B) solution that extends the reach of Cisco's enterprise telephony to people outside of a corporate firewall who do not have phones registered with Cisco Unified Communications Manager.

It allows an external user to click on a hyperlink (in an email or a web page) that will download and install (on first use) a H.264 plugin into the user's browser. It then uses http-based call control to "dial" a URL to place a call to a predefined destination inside the enterprise. The user is not required to open an account, create a password, or otherwise authenticate.

To enable the call to be placed, it uses the Expressway solution (a secure traversal zone between the VCS Control and VCS Expressway) as a Unified Communications gateway to traverse the firewall between the Jabber Guest client in the internet and the Jabber Guest servers inside the enterprise to reach the destination user agent (endpoint).

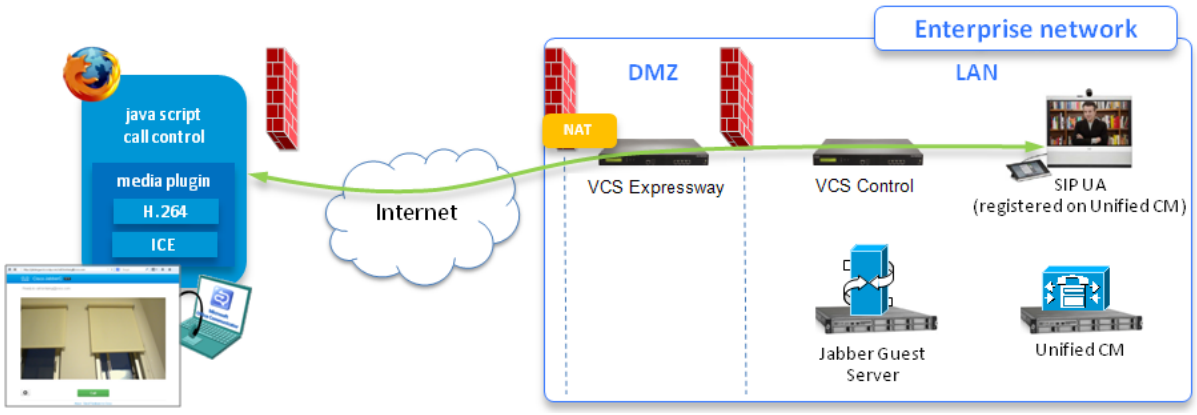

Jabber Guest signaling and media flows in single-NIC deployment

This topic summarizes the Jabber Guest traffic flow through the VCS Expressway and VCS Control deployment when the VCS Expressway has only one network interface card (NIC) active.

The dual-NIC deployment is described in *Cisco Jabber Guest Server 10.0 Installation and Configuration Guide*.

Single-NIC VCS Expressway deployment summary

- The VCS Expressway is in the DMZ with a single NIC enabled
- The VCS Expressway is used for TURN services and reverse proxy
- SIP traffic goes from the Jabber Guest server to the VCS Control. The VCS Expressway does not do call control
- Media flows between the VCS Expressway and VCS Control using a port range and not a traversal zone

Note that the VCS Expressway can optionally be configured to use static NAT mode. If you choose this mode, you must configure the Jabber Guest server with the static NAT address and DMZ external address of the VCS Expressway. You need to do this so that media can go to the DMZ external address of the VCS Expressway rather than being reflected off the outside firewall.

Call flow summary in single-NIC deployment

1. The Jabber Guest client sends an HTTP(S) request which is routed using HTTPS tunnels through the Expressway solution and on to the Jabber Guest server inside the enterprise.
2. The Jabber Guest server converts the HTTP(S) request into SIP and sends it to the VCS Control.
3. The VCS Control routes the call to the appropriate destination endpoint (typically via a SIP trunk to an endpoint registered to Unified CM) and uses its back-to-back user agent (B2BUA) to connect the call to the originating Jabber Guest client via the VCS Expressway's TURN server.

Call signaling flow

When the Jabber Guest client initiates the call, the following diagram shows how the signaling is typically routed through the VCS, Jabber Guest server and Unified CM to the destination user agent.

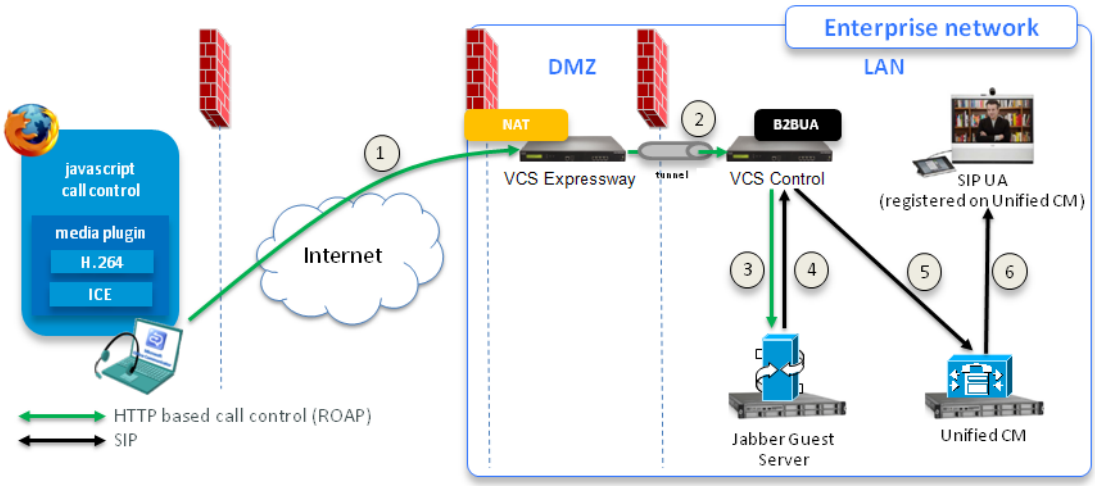

The return signaling from the user agent to the Jabber Guest client then follows the same route, but in reverse.

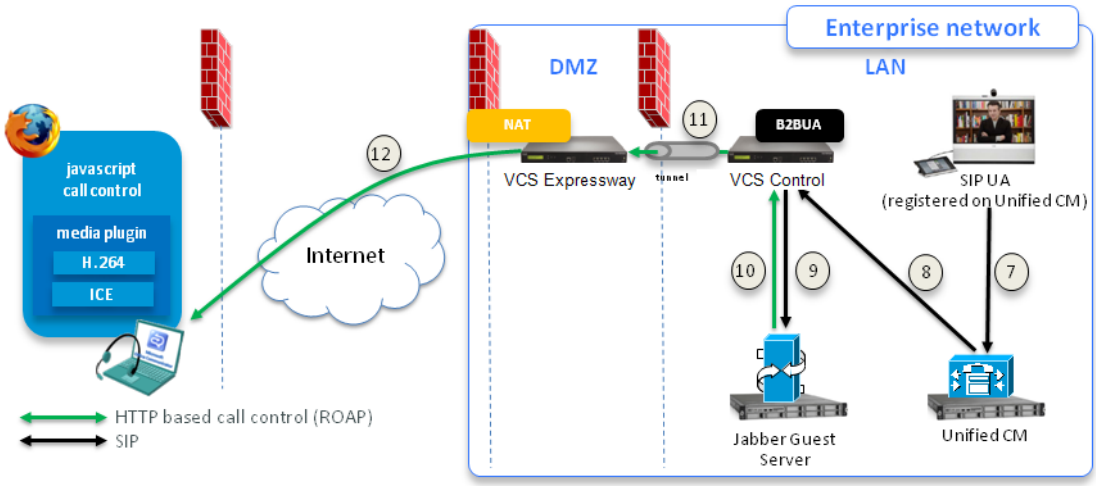

Media channels negotiation results in the allocation of TURN relays between the Jabber Guest client and the VCS Expressway.

Note: Jabber Guest media does not go through the traversal link between VCS Expressway and VCS Control; media is sent from the VCS Control to the externally-facing / NAT interface of the VCS Expressway. You may need to configure your enterprise border firewall to reflect the media back in.

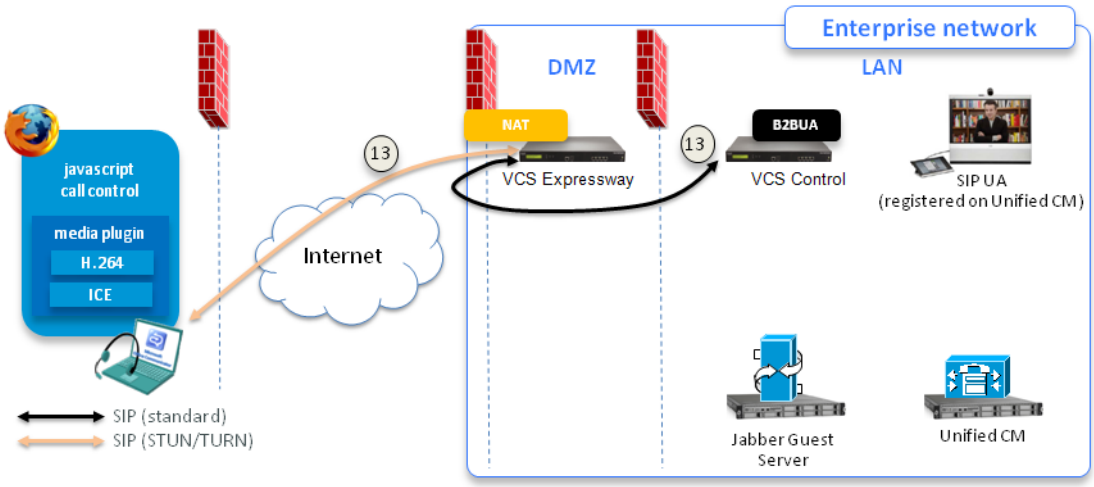

RTP media flow

The following diagram shows the media flows and typical port usage on the VCS Expressway and VCS Control. The TURN server on the VCS Expressway relays the media between the Jabber Guest client and the B2BUA on the VCS Control, and the media also flows between the B2BUA and the internal endpoint.

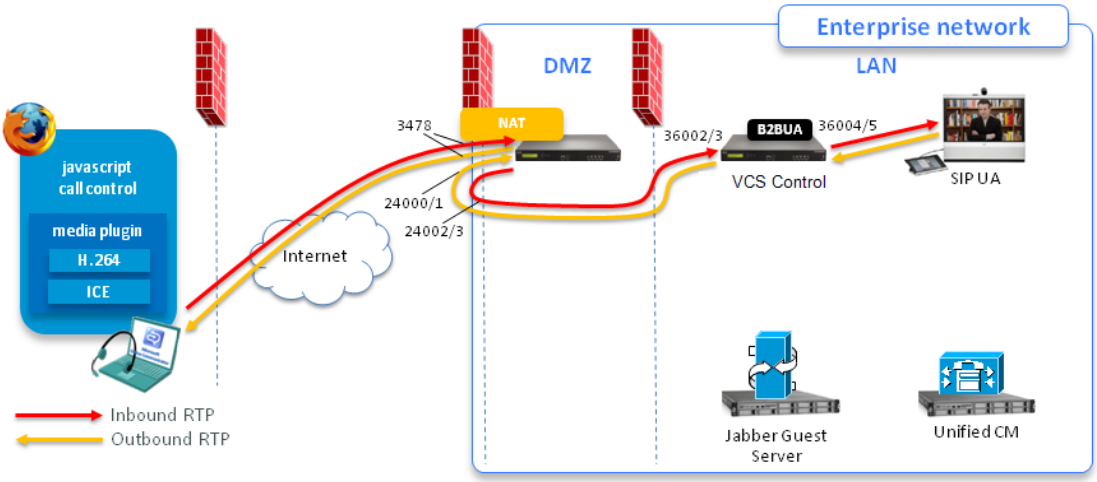

See Configuring your firewall for Jabber Guest traffic [p.93] for full information about port requirements.

Jabber Guest licensing and call capacity

The VCS licensing requirements for Jabber Guest sessions are as follows:

- Each session typically uses 4 TURN server relays on the VCS Expressway.
- 2 traversal call licenses are required per Cisco Jabber Guest session:
  - 1 traversal call license on the VCS Expressway for each Cisco Jabber Guest session
  - 1 traversal call license on the VCS Control for each Cisco Jabber Guest session

The maximum number of Jabber Guest sessions that can be supported through the VCS depends on the type of appliance / VM server, and whether they are deployed as a single VCS Control and VCS Expressway pair, or as a pair of clusters.

Table 3: Jabber Guest session limits

	Small / Medium systems	Large systems
Single VCS Control and VCS Expressway pair	100	500
Pair of VCS Control and VCS Expressway clusters (4 or more peers per cluster for maximum capacity)	400	2000

Configuring Jabber Guest services on VCS

This guide primarily describes the VCS configuration requirements. For information about configuring the Jabber Guest server and Jabber Guest client requirements, see:

- *Cisco Jabber Guest Server Installation and Configuration Guide*
- *Cisco Jabber Guest Administration and API Guide*
- *Cisco Jabber Guest Release Notes*

Jabber Guest configuration summary

You must configure the VCS with the domain that will support Jabber Guest services, associate that domain with one or more Jabber Guest servers, and set up the call routing to the destination endpoint.

In summary, the steps required to configure your VCS system to support Jabber Guest are:

1. Install VCS security certificates and set up a secure traversal zone for Unified Communications between VCS Control and VCS Expressway.
2. Configure the VCS Expressway:
   a. Enable Jabber Guest services.
   b. Enable TURN services.
   c. Lower the MTU size from 1500 to 1400 bytes.
3. Configure the VCS Control:
   a. Enable Jabber Guest services
   b. Configure the domain that requires Jabber Guest support
   c. Configure Jabber Guest servers and associate their addresses with the domain
   d. Set up secure neighbor zones to the Jabber Guest servers

4. Configure the call routing, such as search rules, to route calls received from the Jabber Guest servers to the appropriate destinations e.g. Unified CM over a SIP trunk.
5. Configure the firewall to listen for and translate Jabber Guest traffic.

These steps are explained in detail below, using as an example a Jabber Guest client attempting to set up a call to the following URL: `https://expressway.example.com/call/8111@example.com`.

Note that:

- The VCS Expressway domain must be the same as the domain used for Jabber Guest.
- You cannot use Jabber Guest services in conjunction with mobile and remote access calls and sessions.
- Media is sent from the VCS Control to the externally-facing/NAT interface of the VCS Expressway; you must ensure that your firewall allows this (see Configuring your firewall for Jabber Guest traffic [p.93]).

Installing VCS security certificates and setting up a secure traversal zone

To support Unified Communications features (such as mobile and remote access or Jabber Guest), there must be a Unified Communications traversal zone connection between the VCS Control and the VCS Expressway. This involves:

- Installing suitable security certificates on the VCS Control and the VCS Expressway.
- Configuring a Unified Communications traversal zone between the VCS Control and the VCS Expressway

See Configuring a secure traversal zone connection for Unified Communications [p.96] for instructions about how to do this if your system does not already have a secure traversal zone in place.

Configuring the VCS Expressway for Jabber Guest

You must enable Jabber Guest services:

1. On the VCS Expressway, go to **Configuration > Unified Communications > Configuration**.
2. Set **Unified Communications mode** to *Jabber Guest services*.
3. Click **Save**.

You must enable the VCS Expressway's TURN server to allow media routing from the Jabber Guest clients to the VCS Control to be established via ICE:

1. Go to **Configuration > Traversal > TURN**.
2. Set **TURN services** to *On*.
3. Enter an **Authentication realm**.
4. Click **Save**.

You do not have to set up any TURN client credentials in the local authentication database.

In some call scenarios, such as when using VPN / SSL tunnels, the available Maximum Transmission Unit (MTU) can be reduced. The default MTU on VCS Expressway of 1500 bytes can be too high and can cause packet loss. We recommended that you lower the MTU size on the relevant network interfaces to 1400 bytes:

1. Go to **System > IP**.
2. In the **Maximum transmission unit (MTU)** field, enter 1400.

If you have multiple interfaces, you will typically want to do this on the externally-facing interface.

3. Click **Save**.

Configuring the VCS Control for Jabber Guest

Task 1: Enable Jabber Guest services

1. On the VCS Control, go to **Configuration > Unified Communications > Configuration**.
2. Set **Unified Communications mode** to *Jabber Guest services*.
3. Click **Save**.
   Jabber Guest services are enabled, but you cannot configure Jabber Guest servers yet; you need to enable Jabber Guest on a domain first.

Task 2: Enable Jabber Guest on the required domain

1. Go to **Configuration > Domains**.
2. Select the domain that will support Jabber Guest services
   (If the domain does not yet exist, click **New** and enter the **Domain name**, in this case, `example.com`)
3. Set **Jabber Guest** to *On*
4. Click **Save**
   (The button reads **Create domain** if you are setting up the domain for the first time)

Note that only one Jabber Guest domain is supported per VCS (cluster) deployment.

Task 3: Configure Jabber Guest servers and associate their addresses with the Jabber Guest domain

1. Go back to **Configuration > Unified Communications > Configuration**.
2. Click the **Configure Jabber Guest servers** link.
   This takes you to the **Jabber Guest servers** page.
3. Click **New**.
4. Enter the details of the Jabber Guest server:
   a. **Domain**: select the Jabber Guest domain that is to be mapped to a server hostname.
   b. **Server hostname**: enter the FQDN of a Jabber Guest server to use for the selected domain.
      This must be an FQDN, not an unqualified hostname or an IP address.
   c. **Priority**: this controls the order in which connections to this hostname are attempted for this domain.
      All priority 1 hostnames are attempted first, followed by priority 2 hostnames, and so on.
5. Click **Create entry**.
6. If required, add further Jabber Guest server addresses for the domain. You can give each server the same priority for even load balancing.

Task 4: Create corresponding neighbor zones for each of the Jabber Guest servers

1. On the VCS Control, go to **Configuration > Zones > Zones**.
2. Click **New**.
3. Configure the fields as follows (leave all other fields with default values):

Name	Enter the name you want to give this zone, for example “Jabber Guest server [name]”.
Type	*Neighbor*
H.323 mode	*Off*
SIP mode	*On*
Transport	*TLS*
TLS verify mode	*On* As these zones use a TLS verified connection you must ensure certificate trust between the VCS and the Jabber Guest servers. • When the Jabber Guest server is installed, it uses a self-signed certificate by default. However, you can install a certificate that is signed by a trusted certificate authority. You must install on the VCS Control either the self-signed certificate of the Jabber Guest server, or the trusted CA certificates of the authority that signed the Jabber Guest server's certificate. To upload trusted Certificate Authority (CA) certificates to the VCS, go to **Maintenance > Security certificates > Trusted CA certificate**. You must restart the VCS for the new trusted CA certificate to take effect. • You must install on the Jabber Guest server the trusted CA certificates of the authority that signed the VCS Control's server certificate. To manage certificates on the Jabber Guest server, go to **Settings > Local SSL Certificate**.
Media encryption mode	*Force encrypted*
Location	Enter the same FQDN of the Jabber Guest server as configured on the **Jabber Guest servers** page.
Zone profile	Default

4. Click **Create zone**.
5. Repeat this process for every Jabber Guest server.

Note that these neighbor zones are used to receive traffic **from** the Jabber Guest servers. Do not configure any search rules to route traffic **to** these zones.

Configuring call routing

You must configure the call routing on the VCS Control, such as search rules to route calls received by the VCS Control from the Jabber Guest servers to the appropriate destinations.

In this example the destination address is **`8111@example.com`**. The call routing options could include:

- **Endpoints registered to Unified CM**: in this case you need to have configured a SIP trunk / neighbor zone between Unified CM and VCS Control, and suitable search rules to route Jabber Guest calls (**`8(\d{3})@example.com`** for example) to Unified CM. See *Cisco Unified Communications Manager with VCS (SIP Trunk) Deployment Guide*.
- **Endpoints registered locally to the VCS Control**: in this case you just need suitable search rules to route calls for the Jabber Guest domain to the relevant endpoints.

Configuring your firewall for Jabber Guest traffic

This section summarizes the ports that need to be opened for Jabber Guest traffic on the firewalls between your internal network (where the VCS Control is located) and the DMZ (where the VCS Expressway is located) and between the DMZ and the public internet.

Inbound from public internet to VCS Expressway (DMZ)

Purpose	Protocol	Internet endpoint (source)	VCS Expressway (listening)
HTTPS traffic (see notes below)	TCP	TCP source port	9443
HTTP traffic (see notes below)	TCP	TCP source port	9980
TURN server control / media	UDP	UDP source port	3478 (small/medium system) 3478-3483 (default range on large system)*

Note that:

- HTTP and HTTPS traffic from Jabber Guest clients in the internet is sent to ports 80 and 443 TCP respectively. Therefore the firewall between the VCS Expressway and the public internet must translate destination port 80 to 9980 and destination port 443 to 9443 for all TCP traffic that targets the VCS Expressway address.
- 80/443 TCP are the standard HTTP/S administration interfaces on the VCS. If the VCS Expressway is administered from systems located in the internet, then the firewall translation must also distinguish by source address and must not translate the destination port of traffic arriving from those management systems.
- You also need to ensure that appropriate DNS records exist so that the Jabber Guest client can reach the VCS Expressway. The FQDN of the VCS Expressway in DNS must include the Jabber Guest domain, so in this case it could be **`expressway.example.com`**. Use round-robin DNS if it is a cluster of VCS Expressways.
  Note that this is public DNS configuration and it does not impose any configuration requirements on the VCS Expressway itself (host name / domain name on the DNS page, or the cluster name etc.)

Inbound from VCS Expressway (external/NAT address) to VCS Control (private)

Purpose	Protocol	VCS Expressway (source external/NAT address)	VCS Control (listening)
Media	UDP	24000 to 29999 *	36002 to 59999 **

Jabber Guest media does not go through the traversal link between VCS Expressway and VCS Control. You may find that two way media can still be established even if the VCS Expressway to VCS Control rules described above are not applied. This is because the outbound media creates a pinhole in the firewall. However, these rules are required to support uni-directional media (that is, only from outside to inside).

The following diagram shows the media flows and typical port usage on the VCS Expressway and VCS Control. The TURN server on the VCS Expressway relays the media between the Jabber Guest client and the B2BUA on the VCS Control, and the media also flows between the B2BUA and the internal endpoint.

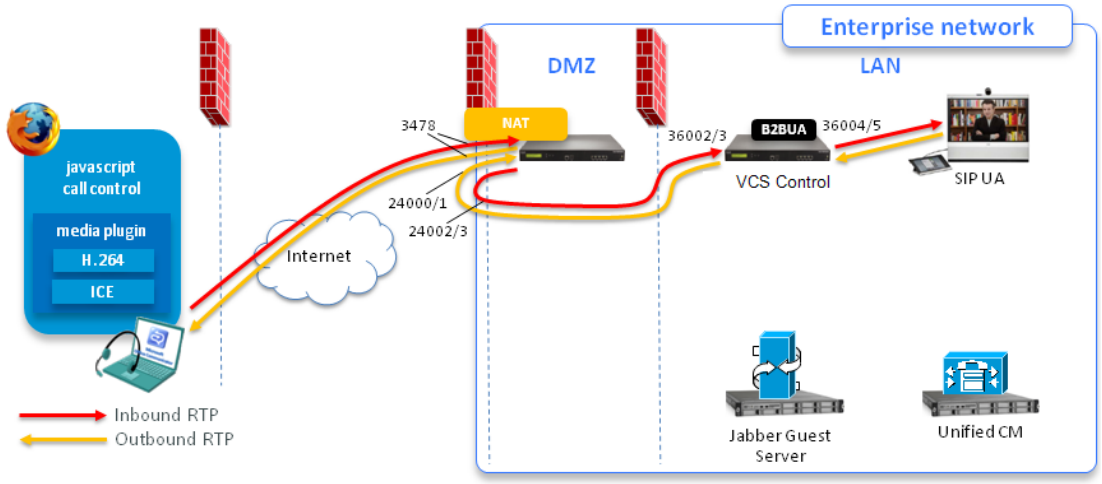

Outbound from VCS Control (private) to VCS Expressway (external/NAT address)

Purpose	Protocol	VCS Control (source)	VCS Expressway (listening external/NAT address)
Media	UDP	36002 to 59999 **	24000 to 29999 *

Outbound from VCS Control (private) to VCS Expressway (DMZ internally-facing address)

Purpose	Protocol	VCS Control (source)	VCS Expressway (DMZ internal listening)
SSH (HTTP/S tunnels)	TCP	Ephemeral port	2222

* On Large systems you can configure a range of TURN request listening ports. The default range is 3478 – 3483. The default TURN relay media port range of 24000 – 29999 applies to new installations of X8.1 or later. The previous default range of 60000 – 61799 still applies to earlier releases that have upgraded to X8.1.

** On new installations of X8.1 or later, the default media traversal port range is 36000 to 59999, and is set on the VCS Control (**Configuration > Local Zones > Traversal Subzone**). In Large VCS Expressway systems the first 12 ports in the range – 36000 to 36011 by default – are always reserved for multiplexed traffic. The VCS Expressway listens on these ports. You cannot configure a distinct range of demultiplex listening ports on Large systems: they always use the first 6 pairs in the media port range. On Small/Medium systems you can explicitly specify which 2 ports listen for multiplexed RTP/RTCP traffic, on the VCS Expressway (**Configuration > Traversal > Ports**). On upgrades to X8.2 or later, the VCS Control retains the media traversal port range from the previous version (could be 50000 - 54999 or 36000 - 59999, depending on source version). The VCS Expressway retains the previously configured demultiplexing pair (either 2776 & 2777 or 50000 & 50001 by default, depending on upgrade path) and the switch **Use configured demultiplexing ports** is set to *Yes*. If you do not want to use a particular pair of ports, switch **Use configured demultiplexing ports** to *No*, then the VCS Expressway will listen on the first pair of ports in the media traversal port range (36000 and 36001 by default). In this case, we recommend that you close the previously configured ports after you configure the firewall for the new ports.

Troubleshooting Jabber Guest services on VCS

Packet loss on calls

Check if the Maximum Transmission Unit (MTU) on VCS Expressway is too high. We recommended that you lower the MTU size on the relevant network interfaces from 1500 to 1400 bytes.

Jabber Guest client fails to connect and gets "Not Found on Accelerator" message

This error can occur if:

- The VCS Expressway domain is different from the Jabber Guest domain.
- The SIP trunk between the Jabber Guest server and the VCS Control is not active.

Jabber Guest client fails to connect and gets "Link Not Found" message

This error can occur if:

- The URL being called is wrong.
- The correct URL is being called but it has not been enabled in the Jabber Guest server or it has expired.

Configuring a secure traversal zone connection for Unified Communications

To support Unified Communications features (such as mobile and remote access or Jabber Guest), there must be a Unified Communications traversal zone connection between the VCS Control and the VCS Expressway. This involves:

- Installing suitable security certificates on the VCS Control and the VCS Expressway.
- Configuring a Unified Communications traversal zone between the VCS Control and the VCS Expressway

Note: You should configure only one *Unified Communications traversal* zone per VCS.

Installing VCS security certificates

You must set up trust between the VCS Control and the VCS Expressway:

1. Install a suitable server certificate on both the VCS Control and the VCS Expressway.
   - The certificate must include the **Client Authentication** extension. The system will not allow you to upload a server certificate without this extension when Unified Communications features have been enabled.
   - The VCS includes a built-in mechanism to generate a certificate signing request (CSR) and is the recommended method for generating a CSR:
     - Ensure that the CA that signs the request does not strip out the client authentication extension.
     - The generated CSR includes the client authentication request and any relevant subject alternate names for the Unified Communications features that have been enabled (see Server certificate requirements for Unified Communications [p.99] if appropriate).
   - To generate a CSR and /or to upload a server certificate to the VCS, go to **Maintenance > Security certificates > Server certificate**. You must restart the VCS for the new server certificate to take effect.
2. Install on both VCSs the trusted Certificate Authority (CA) certificates of the authority that signed the VCS's server certificates.
   There are additional trust requirements, depending on the Unified Communications features being deployed.
   For mobile and remote access deployments:
   - The VCS Control must trust the Unified CM and IM&P tomcat certificate.
   - If appropriate, both the VCS Control and the VCS Expressway must trust the authority that signed the endpoints' certificates.

   For Jabber Guest deployments:
   - When the Jabber Guest server is installed, it uses a self-signed certificate by default. However, you can install a certificate that is signed by a trusted certificate authority. You must install on the VCS Control either the self-signed certificate of the Jabber Guest server, or the trusted CA certificates of the authority that signed the Jabber Guest server's certificate.

   To upload trusted Certificate Authority (CA) certificates to the VCS, go to **Maintenance > Security certificates > Trusted CA certificate**. You must restart the VCS for the new trusted CA certificate to take effect.

See *Certificate Creation and Use With VCS Deployment Guide* for full information about how to create and upload the VCS's server certificate and how to upload a list of trusted certificate authorities.

Configuring encrypted VCS traversal zones

To support Unified Communications features via a secure traversal zone connection between the VCS Control and the VCS Expressway:

- The VCS Control and VCS Expressway must be configured with a zone of type *Unified Communications traversal*. This automatically configures an appropriate traversal zone (a traversal client zone when selected on a VCS Control, or a traversal server zone when selected on a VCS Expressway) that uses SIP TLS with **TLS verify mode** set to *On*, and **Media encryption mode** set to *Force encrypted*.
- Both VCSs must trust each other's server certificate. As each VCS acts both as a client and as a server you must ensure that each VCS's certificate is valid both as a client and as a server.
- If an H.323 or a non-encrypted connection is also required, a separate pair of traversal zones must be configured.

To set up a secure traversal zone, configure your VCS Control and VCS Expressway as follows:

1. Go to **Configuration > Zones > Zones**.
2. Click **New**.
3. Configure the fields as follows (leave all other fields with default values):

	VCS Control	VCS Expressway
Name	"Traversal zone" for example	"Traversal zone" for example
Type	*Unified Communications traversal*	*Unified Communications traversal*
Connection credentials section		
Username	"exampleauth" for example	"exampleauth" for example
Password	"ex4mpl3.c0m" for example	Click **Add/Edit local authentication database**, then in the popup dialog click **New** and enter the **Name** ("exampleauth") and **Password** ("ex4mpl3.c0m") and click **Create credential**.
SIP section		
Port	`7001`	`7001`
TLS verify subject name	Not applicable	Enter the name to look for in the traversal client's certificate (must be in either the Subject Common Name or the Subject Alternative Name attributes). If there is a cluster of traversal clients, specify the cluster name here and ensure that it is included in each client's certificate.
Authentication section		
Authentication policy	*Do not check credentials*	*Do not check credentials*
Location section		

	VCS Control	VCS Expressway
Peer 1 address	Enter the FQDN of the VCS Expressway. Note that if you use an IP address (not recommended), that address must be present in the VCS Expressway server certificate.	Not applicable
Peer 2...6 address	Enter the FQDNs of additional peers if it is a cluster of VCS Expressways.	Not applicable

4. Click **Create zone**.

Server certificate requirements for Unified Communications

The VCS certificate signing request (CSR) tool prompts for and incorporates the relevant subject alternate name (SAN) entries as appropriate for the Unified Communications features that are supported on that VCS.

The following table shows which CSR alternative name elements apply to which Unified Communications features:

CSR SAN element	Mobile and remote access	Jabber Guest	XMPP federation
Unified CM registrations domains	✓ (VCS Expressway only)	X	X
XMPP federation domains	X	X	✓ (VCS Expressway only)
IM and Presence chat node aliases (federated group chat)	X	X	✓
Unified CM phone security profile names	✓ (VCS Control only)	X	X

Note that:

- A new VCS Control certificate may need to be produced for the VCS Control if chat node aliases are added or renamed, such as when an IM and Presence node is added or renamed, or if new TLS phone security profiles are added.
- A new VCS Expressway certificate must be produced if new chat node aliases are added to the system, or if the Unified CM or XMPP federation domains are modified.
- You must restart the VCS for any new uploaded server certificate to take effect.

More details about the individual feature requirements per VCS Control / VCS Expressway are described below.

VCS Control server certificate requirements

The VCS Control server certificate needs to include the following elements in its list of subject alternate names:

- **Unified CM phone security profile names**: the names, in FQDN format, of all of the **Phone Security Profiles** in Unified CM that are configured for encrypted TLS and are used for devices requiring remote access. This ensures that Unified CM can communicate with VCS Control via a TLS connection when it is forwarding messages from devices that are configured with those security profiles.
- **IM and Presence chat node aliases (federated group chat)**: the **Chat Node Aliases** (e.g. chatroom1.example.com) that are configured on the IM and Presence servers. These are required only for Unified Communications XMPP federation deployments that intend to support group chat over TLS with federated contacts.
  The VCS Control automatically includes the chat node aliases in the CSR, providing it has discovered a set of IM&P servers.
  We recommend that you use DNS format for the chat node aliases when generating the CSR. You must include the same chat node aliases in the VCS Expressway server certificate's alternative names.

Figure 5: Entering subject alternative names for security profiles and chat node aliases on the VCS Control's CSR generator

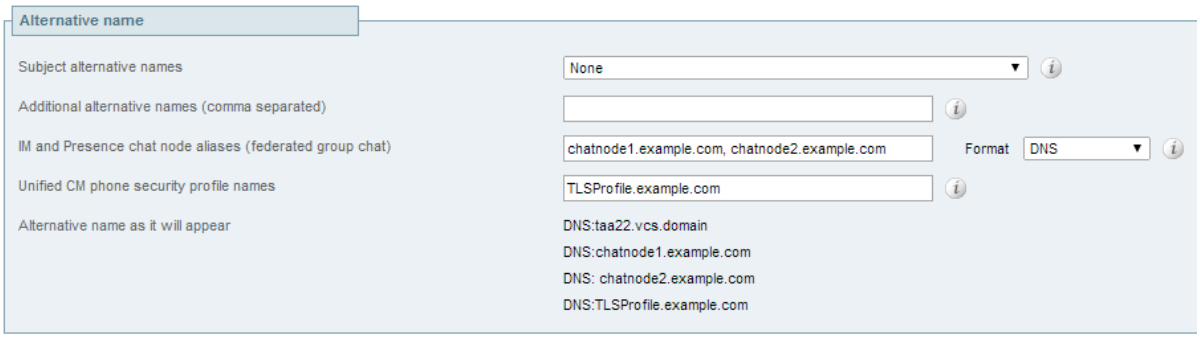

VCS Expressway server certificate requirements

The VCS Expressway server certificate needs to include the following elements in its list of subject alternate names:

- **Unified CM registrations domains**: all of the domains which are configured on the VCS Control for Unified CM registrations. They are required for secure communications between endpoint devices and VCS Expressway.
  You must select the *DNS* format and manually specify the required FQDNs, separated by commas if you need multiple domains. The *SRVName* format may not be supported by your chosen CA.
  You must also prefix each with **`collab-edge.`** (see example in following screenshot).
- **XMPP federation domains**: the domains used for point-to-point XMPP federation. These are configured on the IM&P servers and should also be configured on the VCS Control as domains for XMPP federation. We recommend that you select the *DNS* format and manually specify the required FQDNs, separated by commas if you need multiple domains. The *XMPPAddress* format may not be supported by your chosen CA.
- **IM and Presence chat node aliases (federated group chat)**: the same set of **Chat Node Aliases** as entered on the VCS Control's certificate. They are only required for voice and presence deployments which will support group chat over TLS with federated contacts.
  We recommend that you select the *DNS* format and manually specify the required FQDNs, separated by commas if you need multiple domains. The *XMPPAddress* format may not be supported by your chosen CA.
  Note that the list of required aliases can be viewed (and copy-pasted) from the equivalent **Generate CSR** page on the VCS Control.

Figure 6: Entering subject alternative names for Unified CM registration domains, XMPP federation domains, and chat node aliases, on the VCS Expressway's CSR generator

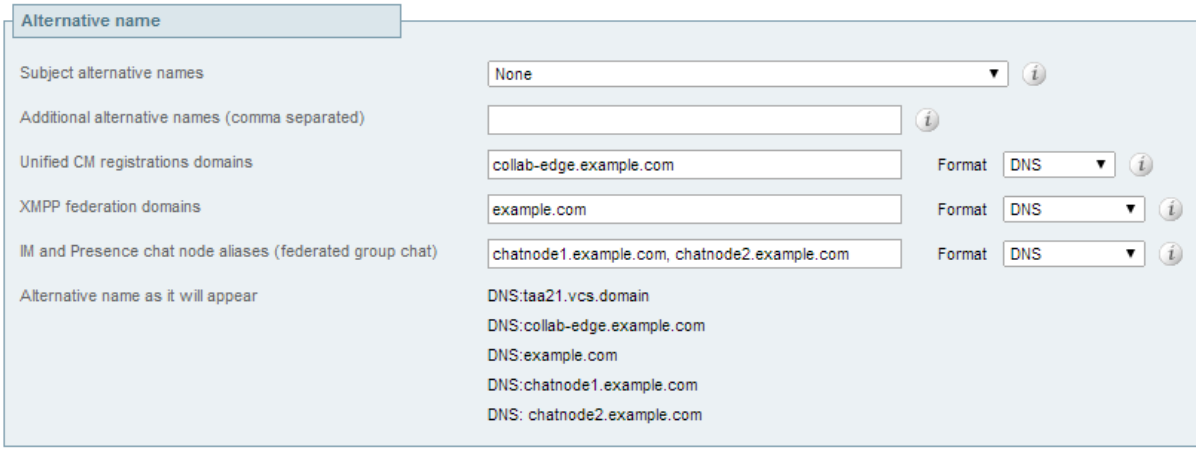

See *Certificate Creation and Use With VCS Deployment Guide* for full information about how to create and upload the VCS's server certificate and how to upload a list of trusted certificate authorities.

Protocols

This section provides information about how to configure the VCS to support the SIP and H.323 protocols.

About H.323 103
Configuring H.323 104
About SIP 106
Configuring SIP 109
Configuring domains 113
Configuring SIP and H.323 interworking 115

About H.323

The VCS supports the H.323 protocol: it is an H.323 gatekeeper.

It can also provide interworking between H.323 and SIP, translating between the two protocols to enable endpoints that only support one of these protocols to call each other. In order to support H.323, the **H.323 mode** must be enabled.

Using the VCS as an H.323 gatekeeper

As an H.323 gatekeeper, the VCS accepts registrations from H.323 endpoints and provides call control functions such as address translation and admission control.

To enable the VCS as an H.323 gatekeeper, you must ensure that **H.323 mode** is set to *On* (**Configuration > Protocols > H.323**).

Note that this is the default setting, so the VCS will work as an H.323 gatekeeper "out of the box", without any other special configuration.

H.323 endpoint registration

H.323 endpoints in your network must register with the VCS in order to use it as their gatekeeper.

There are two ways an H.323 endpoint can locate a VCS with which to register: manually or automatically. The option is configured on the endpoint itself under the Gatekeeper Discovery setting (consult your endpoint manual for how to access this setting).

- If the mode is set to automatic, the endpoint will try to register with any VCS it can find. It does this by sending out a Gatekeeper Discovery Request, to which eligible VCSs will respond.
- If the mode is set to manual, you must specify the IP address of the VCS with which you want your endpoint to register, and the endpoint will attempt to register with that VCS only.

Preventing automatic H.323 registrations

You can prevent H.323 endpoints being able to register automatically with the VCS by disabling **Auto Discovery** on the VCS (**Configuration > Protocols > H.323**).

Configuring H.323

The **H.323** page (**Configuration > Protocols > H.323**) is used to configure the H.323 settings on the VCS, including:

- whether H.323 is enabled or not
- H.323 gatekeeper settings
- whether to insert the prefix of the ISDN gateway into the caller's E.164 number presented on the destination endpoint

The configurable options are:

Field	Description	Usage tips
H.323 mode	Enables or disables H.323 on the VCS. H.323 support is *On* by default.	
Registration UDP port	The listening port for H.323 UDP registrations. Default is 1719.	The default VCS configuration uses standard port numbers so you can use H.323 services out of the box without having to first set these up.
Call signaling TCP port	The listening port for H.323 call signaling. Default is 1720.	
Call signaling port range start and **end**	Specifies the lower port in the range used by H.323 calls after they are established. Default is 15000.	The call signaling port range must be great enough to support all the required concurrent calls.
Registration conflict mode	Determines how the system behaves if an endpoint attempts to register an alias currently registered from another IP address. *Reject*: denies the new registration. This is the default. *Overwrite*: deletes the original registration and replaces it with the new registration.	An H.323 endpoint may attempt to register with the VCS using an alias that has already been registered on the VCS from another IP address. The reasons for this could include: ■ Two endpoints at different IP addresses are attempting to register using the same alias. ■ A single endpoint has previously registered using a particular alias. The IP address allocated to the endpoint then changes, and the endpoint attempts to re-register using the same alias. *Reject* is useful if your priority is to prevent two users registering with the same alias. *Overwrite* is useful if your network is such that endpoints are often allocated new IP addresses, because it will prevent unwanted registration rejections. Note that in a cluster a registration conflict is only detected if the registration requests are received by the same peer.
Time to live	The interval (in seconds) at which an H.323 endpoint must re-register with the VCS in order to confirm that it is still functioning. Default is 1800.	Some older endpoints do not support the ability to periodically re-register with the system. In this case, and in any other situation where the system has not had a confirmation from the endpoint within the specified period, it will send an IRQ to the endpoint to verify that it is still functioning.

Field	Description	Usage tips
Call time to live	The interval (in seconds) at which the VCS polls the endpoints in a call to verify that they are still in the call. Default is 120.	If the endpoint does not respond, the call will be disconnected. The system polls endpoints in a call regardless of whether the call type is traversal or non-traversal.
Auto discover	Determines whether it will respond to Gatekeeper Discovery Requests sent out by endpoints. The default is *On*.	To prevent H.323 endpoints being able to register automatically with the VCS, set **Auto discover** to *Off*. This means that endpoints can only register with the VCS if their **Gatekeeper Discovery** setting is *Manual* and they have been configured with the VCS's IP address.
Caller ID	Specifies whether the prefix of the ISDN gateway is inserted into the caller's E.164 number presented on the destination endpoint.	Including the prefix allows the recipient to directly return the call.

About SIP

The VCS supports the SIP protocol. It can act as a SIP registrar, SIP proxy and as a SIP Presence Server.

The VCS can provide interworking between SIP and H.323, translating between the two protocols to enable endpoints that only support one of these protocols to call each other.

To support SIP:

- SIP mode must be enabled.
- At least one of the SIP transport protocols (UDP, TCP or TLS) must be active. Note that the use of UDP is not recommended for video as SIP message sizes are frequently larger than a single UDP packet.

VCS as a SIP registrar

For a SIP endpoint to be contactable via its alias, it must register its Address of Record (AOR) and its location with a SIP registrar. The SIP registrar maintains a record of the endpoint's details against the endpoint's AOR. The AOR is the alias through which the endpoint can be contacted; it is a SIP URI and always takes the form **`username@domain`**.

When a call is received for that AOR, the SIP registrar refers to the record to find its corresponding endpoint. (Note that the same AOR can be used by more than one SIP endpoint at the same time, although to ensure that all endpoints are found they must all register with the same VCS or VCS cluster.)

A SIP registrar only accepts registrations for domains for which it is authoritative. The VCS can act as a SIP registrar for up to 200 domains. To make the VCS act as a SIP registrar, you must configure it with the SIP domains for which it will be authoritative . It will then handle registration requests for any endpoints attempting to register against that domain. Note that the VCS will also accept registration requests where the domain portion of the AOR is either the FQDN or the IP address of the VCS. Whether or not the VCS accepts a registration request depends on its registration control settings.

In a Unified Communications deployment, endpoint registration for SIP devices may be provided by Unified CM. In this scenario, the VCS provides secure firewall traversal and line-side support for Unified CM registrations. When configuring domains, you must select the system - either *Unified CM* or *VCS* to provide registration services for each domain.

SIP endpoint registration

There are two ways a SIP endpoint can locate a registrar with which to register: manually or automatically. The option is configured on the endpoint itself under the SIP **Server Discovery** option (consult your endpoint user guide for how to access this setting; it may also be referred to as **Proxy Discovery**).

- If the **Server Discovery** mode is set to automatic, the endpoint will send a REGISTER message to the SIP server that is authoritative for the domain with which the endpoint is attempting to register. For example, if an endpoint is attempting to register with a URI of **`john.smith@example.com`**, the request will be sent to the registrar authoritative for the domain **`example.com`**. The endpoint can discover the appropriate server through a variety of methods including DHCP, DNS or provisioning, depending upon how the video communications network has been implemented.
- If the **Server Discovery** mode is set to manual, the user must specify the IP address or FQDN of the registrar (VCS or VCS cluster) with which they want to register, and the endpoint will attempt to register with that registrar only.

The VCS is a SIP server and a SIP registrar.

- If an endpoint is registered to the VCS, the VCS will be able to forward inbound calls to that endpoint.
- If the VCS is not configured with any SIP domains, the VCS will act as a SIP server. It may proxy registration requests to another registrar, depending upon the **SIP registration proxy mode** setting.

Registration refresh intervals

Depending on the typical level of active registrations on your system, you may want to configure the **Standard registration refresh strategy** to *Variable* and set the refresh intervals as follows:

Active registrations	Minimum refresh interval	Maximum refresh interval
1–100	45	60
101–500	150	200
501–1000	300	400
1000–1500	450	800
1500+	750	1000

If you want to ensure registration resiliency, use SIP outbound registrations as described below.

SIP registration resiliency

The VCS supports multiple client-initiated connections (also referred to as "SIP Outbound") as outlined in *RFC 5626*.

This allows SIP endpoints that support *RFC 5626* to be simultaneously registered to multiple VCS cluster peers. This provides extra resiliency: if the endpoint loses its connection to one cluster peer it will still be able to receive calls via one of its other registration connections.

VCS as a SIP proxy server

The VCS acts as a SIP proxy server when **SIP mode** is enabled. The role of a proxy server is to forward requests (such as REGISTER and INVITE) from endpoints or other proxy servers on to further proxy servers or to the destination endpoint.

The VCS's behavior as a SIP proxy server is determined by:

- the SIP registration proxy mode setting
- the presence of Route Set information in the request header
- whether the proxy server from which the request was received is a neighbor of the VCS

A Route Set specifies the path to take when requests are proxied between an endpoint and its registrar. For example, when a REGISTER request is proxied by the VCS, it adds a path header component to the request. This signals that calls to that endpoint should be routed through the VCS. This is usually required in situations where firewalls exist and the signaling must follow a specified path to successfully traverse the firewall. For more information about path headers, see *RFC 3327*.

When the VCS proxies a request that contains Route Set information, it forwards it directly to the URI specified in the path. Any call processing rules configured on the VCS are bypassed. This may present a security risk if the information in the Route Set cannot be trusted. For this reason, you can configure how the VCS proxies requests that contain Route Sets by setting the **SIP registration proxy mode** as follows:

- *Off*: requests containing Route Sets are rejected. This setting provides the highest level of security.
- *Proxy to known only*: requests containing Route Sets are proxied only if the request was received from a known zone.
- *Proxy to any*: requests containing Route Sets are always proxied.

In all cases, requests that do not have Route Sets are proxied as normal in accordance with existing call processing rules. This setting only applies to dialog-forming requests, such as INVITE and SUBSCRIBE. Other requests, such as NOTIFY, are always proxied regardless of this setting.

Proxying registration requests

If the VCS receives a registration request for a domain for which it is not acting as a Registrar (the VCS does not have that SIP domain configured), then the VCS may proxy the registration request onwards. This depends on the **SIP registration proxy mode** setting, as follows:

- *Off*: the VCS does not proxy any registration requests. They are rejected with a "403 Forbidden" message.
- *Proxy to known only*: the VCS proxies the request in accordance with existing call processing rules, but only to known neighbor, traversal client and traversal server zones.
- *Proxy to any*: this is the same as *Proxy to known only* but for all zone types i.e. it also includes ENUM and DNS zones.

If your network is set up to proxy registration requests, we recommend that you disable GRUU on the VCS systems that are acting as a Registrar for those proxied requests. If GRUU is left enabled, Presence may not work properly for the proxy registered endpoints.

GRUU can only be disabled via the CLI (`xConfiguration SIP GRUU Mode: Off`).

Accepting proxied registration requests

If the VCS receives a proxied registration request, in addition to the VCS's standard registration controls, you can also control whether the VCS accepts the registration depending upon the zone through which the request was received. You do this through the **Accept proxied registrations** setting when configuring a zone.

Proxied registrations are classified as belonging to the zone they were last proxied from. This is different from non-proxied registration requests which are assigned to a subzone within the VCS.

VCS as a SIP Presence Server

The VCS supports the SIP-based SIMPLE protocol. It can act as a Presence Server and Presence User Agent for any of the SIP domains for which it is authoritative. For full information on how to enable and use the VCS as a SIP Presence server, see the Presence section.

Configuring SIP

The **SIP** page (**Configuration > Protocols > SIP**) is used to configure the SIP settings on the VCS, including:

- SIP functionality and SIP-specific transport modes and ports
- certificate revocation checking modes for TLS connections
- registration controls for standard and outbound registrations
- authentication controls for delegated credential checking

SIP functionality and SIP-specific transport modes and ports

This section contains the basic settings for enabling SIP functionality and for configuring the various SIP-specific transport modes and ports. The configurable options are:

Field	Description	Usage tips
SIP mode	Enables and disables SIP functionality (SIP registrar and SIP proxy services) on the VCS. Default is *On*.	This mode must be enabled to use either the Presence Server or the Presence User Agent.
SIP protocols and ports	The VCS supports SIP over **UDP**, **TCP** and **TLS** transport protocols. Use the **Mode** and **Port** settings for each protocol to configure whether or not incoming and outgoing connections using that protocol are supported, and if so, the ports on which the VCS listens for such connections. By default UDP is *Off*, and TCP and TLS are *On*. The default ports are: ■ UDP port: 5060 ■ TCP port: 5060 ■ TLS port: 5061	At least one of the transport protocols must be set to a **Mode** of *On* for SIP functionality to be supported.
TCP outbound port start / end	The range of ports the VCS uses when TCP and TLS connections are established. The default range is 25000 to 29999.	The range must be sufficient to support all required concurrent connections.
Session refresh interval	The maximum time allowed between session refresh requests for SIP calls. Default is 1800 seconds.	For further information see the definition of *Session-Expires* in *RFC 4028*.
Minimum session refresh interval	The minimum value the VCS will negotiate for the session refresh interval for SIP calls. Default is 500 seconds.	For further information see the definition of *Min-SE header* in *RFC 4028*.
TLS handshake timeout	The timeout period for TLS socket handshake. Default is 5 seconds.	You may want to increase this value if TLS server certificate validation is slow (e.g. if OCSP servers do not provide timely responses) and thus cause connection attempts to timeout.

Certificate revocation checking modes

This section controls the certificate revocation checking modes for SIP TLS connections. The configurable options are:

Field	Description	Usage tips
Certificate revocation checking mode	Controls whether revocation checking is performed for certificates exchanged during SIP TLS connection establishment.	We recommend that revocation checking is enabled.
Use OCSP	Controls whether the Online Certificate Status Protocol (OCSP) may be used to perform certificate revocation checking.	To use OCSP, the X.509 certificate to be checked must contain an OCSP responder URI.
Use CRLs	Controls whether Certificate Revocation Lists (CRLs) are used to perform certificate revocation checking.	CRLs can be used if the certificate does not support OCSP. CRLs can be loaded manually onto the VCS, downloaded automatically from preconfigured URIs (see Managing certificate revocation lists (CRLs) [p.313]), or downloaded automatically from a CRL distribution point (CDP) URI contained in the X.509 certificate.
Allow CRL downloads from CDPs	Controls whether the download of CRLs from the CDP URIs contained in X.509 certificates is allowed.	
Fallback behavior	Controls the revocation checking behavior if the revocation status cannot be established, for example if the revocation source cannot be contacted. *Treat as revoked*: treat the certificate as revoked (and thus do not allow the TLS connection). *Treat as not revoked*: treat the certificate as not revoked. Default: *Treat as not revoked*	*Treat as not revoked* ensures that your system continues to operate in a normal manner if the revocation source cannot be contacted, however it does potentially mean that revoked certificates will be accepted.

Registration controls

This section contains the registration controls for standard and outbound SIP registrations. The configurable options are:

Field	Description	Usage tips
Standard registration refresh strategy	The method used to generate the SIP registration expiry period (the period within which a SIP endpoint must re-register to prevent its registration expiring) for standard registrations. *Maximum*: uses the lesser of the configured **Maximum** refresh value and the value requested in the registration. *Variable*: generates a random value between the configured **Minimum** refresh value and the lesser of the configured **Maximum** refresh value and the value requested in the registration. The default is *Maximum*.	The *Maximum* setting uses the requested value providing it is within the specified maximum and minimum ranges. The *Variable* setting calculates a random refresh period for each registration (and re-registration) request in an attempt to continually spread the load. The VCS never returns a value higher than what was requested. This applies only to endpoints registered with the VCS. It does not apply to endpoints whose registrations are proxied through the VCS.
Standard registration refresh minimum	The minimum allowed value for a SIP registration refresh period for standard registrations. Requests for a value lower than this will result in the registration being rejected with a 423 Interval Too Brief response. The default is 45 seconds.	See Registration refresh intervals [p.107]
Standard registration refresh maximum	The maximum allowed value for a SIP registration refresh period for standard registrations. Requests for a value greater than this will result in a lower value being returned (calculated according to the **Standard registration refresh strategy**). The default is 60 seconds.	
Outbound registration refresh strategy	The method used to generate the SIP registration expiry period for outbound registrations. *Maximum*: uses the lesser of the configured **Maximum** refresh value and the value requested in the registration. *Variable*: generates a random value between the configured **Minimum** refresh value and the lesser of the configured **Maximum** refresh value and the value requested in the registration. The default is *Variable*.	These options work in the same manner as for the **Standard registration refresh strategy**. However, outbound registrations allow a much higher maximum value than standard registrations. This is because standard registrations use the re-registration mechanism to keep their connection to the server alive. With outbound registrations the keep-alive process is handled by a separate, less resource-intensive process, meaning that re-registrations (which are more resource-intensive) can be less frequent.
Outbound registration refresh minimum	The minimum allowed value for a SIP registration refresh period for outbound registrations. Requests for a value lower than this will result in the registration being rejected with a 423 Interval Too Brief response. The default is 600 seconds.	

Field	Description	Usage tips
Outbound registration refresh maximum	The maximum allowed value for a SIP registration refresh period for an outbound registration. Requests for a value greater than this will result in a lower value being returned (calculated according to the **Outbound registration refresh strategy**). The default is 3600 seconds.	
SIP registration proxy mode	Specifies how proxied registrations and requests containing Route Sets are handled when the VCS receives a registration request for a domain for which it is not acting as a Registrar. *Off*: registration requests are not proxied (but are still permitted locally if the VCS is authoritative as a Registrar for that domain). Requests with existing Route Sets are rejected. *Proxy to known only*: registration requests are proxied in accordance with existing call processing rules, but only to known neighbor, traversal client and traversal server zones. Requests containing Route Sets are proxied only if they were received from a known zone. *Proxy to any*: registration requests are proxied in accordance with existing call processing rules to all known zones. Requests containing Route Sets are always proxied. The default is *Off*.	See Proxying registration requests [p.108] for more information.

Authentication controls

This section contains the device authentication controls for enabling delegated credential checking. The configurable options are:

Field	Description	Usage tips
Delegated credential checking	Controls whether the credential checking of SIP messages is delegated, via a traversal zone, to another VCS. *Off*: use the relevant credential checking mechanisms (local database, Active Directory Service or H.350 directory via LDAP) on the VCS performing the authentication challenge. *On*: delegate the credential checking to a traversal client. The default is *Off*.	Note that delegated credential checking must be enabled on both the traversal server and the traversal client. See delegated credential checking for more information.

Configuring domains

The **Domains** page (**Configuration > Domains**) lists the SIP domains managed by this VCS.

A domain name can comprise multiple levels. Each level's name can only contain letters, digits and hyphens, with each level separated by a period (dot). A level name cannot start or end with a hyphen, and the final level name must start with a letter. An example valid domain name is `100.example-name.com`.

Note that values shown in the **Index** column correspond to the numeric elements of the `%localdomain1%`, `%localdomain2%`, . . . `%localdomain200%` pattern matching variables.

You can configure up to 200 domains.

Configuring the supported services for Unified Communications (VCS Control only)

When the VCS Control has been enabled for Unified Communications mobile and remote access, you must select the services that each domain will support. The options are:

- **SIP registrations and provisioning on VCS**: the VCS is authoritative for this SIP domain. The VCS acts as a SIP registrar and Presence Server for the domain, and accepts registration requests for any SIP endpoints attempting to register with an alias that includes this domain. The default is *On*.
- **SIP registrations and provisioning on Unified CM**: endpoint registration, call control and provisioning for this SIP domain is serviced by Unified CM. The VCS acts as a Unified Communications gateway to provide secure firewall traversal and line-side support for Unified CM registrations. The default is *Off*.
- **IM and Presence services on Unified CM**: instant messaging and presence services for this SIP domain are provided by the Unified CM IM and Presence service. The default is *Off*.
- **XMPP federation**: enables XMPP federation between this domain and partner domains. The default is *Off*.

Any domain configuration changes, when one or more existing domains are configured for *IM and Presence services on Unified CM* or *XMPP Federation* will result in an automatic restart of the XCP router on both VCS Control and VCS Expressway.

The end-user impact is temporary loss of federation and any Jabber clients using mobile and remote access will be temporarily disconnected. The clients will automatically reconnect after a short period.

Configuring delegated credential checking (VCS Expressway only)

If you have enabled delegated credential checking (**Configuration > Protocols > SIP**), you need to specify the traversal zone to use when delegating credential checks for SIP messages for this domain. This only applies to the SIP domains for which VCS is acting as the service provider and SIP registrar.

You can specify a different zone for each SIP domain, if required.

Choose *Do not delegate* if you want to continue to use this VCS Expressway to perform the credential checking.

Testing the credential checking service

To verify whether the VCS to which credential checking has been delegated is able to receive messages and perform the relevant authentication checks:

1. Go to **Configuration > Domains**.
2. Select the relevant domains.
3. Click **Test credential checking service**.
   The system displays a **Results** section and reports whether the receiving VCS can be reached over the traversal zone and, additionally, if it is able to perform credential checking for both NTLM and SIP digest type challenges.
   If you are not using NTLM authentication in your video network, and thus the receiving VCS is not configured with a connection to an Active Directory Service, then the NTLM check will be expected to fail.

Configuring SIP and H.323 interworking

The **Interworking** page (**Configuration > Protocols > Interworking**) lets you configure whether or not the VCS acts as a gateway between SIP and H.323 calls. The translation of calls from one protocol to the other is known as "interworking".

By default, the VCS acts as a SIP–H.323 and H.323–SIP gateway but only if at least one of the endpoints that are involved in the call is locally registered. You can change this setting so that the VCS acts as a SIP–H.323 gateway regardless of whether the endpoints involved are locally registered. You also have the option to disable interworking completely.

The options for the **H.323 <-> SIP interworking mode** are:

- *Off*: the VCS does not act as a SIP–H.323 gateway.
- *Registered only*: the VCS acts as a SIP–H.323 gateway but only if at least one of the endpoints is locally registered.
- *On*: the VCS acts as a SIP–H.323 gateway regardless of whether the endpoints are locally registered.

You are recommended to leave this setting as *Registered only* (where calls are interworked only if at least one of the endpoints is locally registered). Unless your network is correctly configured, setting it to *On* (where all calls can be interworked) may result in unnecessary interworking, for example where a call between two H.323 endpoints is made over SIP, or vice versa.

Calls for which the VCS acts as a SIP to H.323 gateway are traversal calls. The VCS always takes the media for SIP–H.323 interworked calls so that it can independently negotiate payload types on the SIP and H.323 sides and VCS will re-write these as the media passes.

Also in a SIP SDP negotiation, multiple codec capabilities can be agreed (more than one video codec can be accepted) and the SIP device is at liberty to change the codec it uses at any time within the call. If this happens, because VCS is in the media path it will close and open logical channels to the H.323 device as the media changes (as required) so that media is passed correctly.

Searching by protocol

When searching a zone, the VCS first performs the search using the protocol of the incoming call. If the search is unsuccessful the VCS may then search the zone again using the alternative protocol, depending on where the search came from and the **Interworking mode**. Note that the zone must also be configured with the relevant protocols enabled (SIP and H.323 are enabled on a zone by default).

- If the request has come from a neighboring system and **Interworking mode** is set to *Registered only*, the VCS searches the Local Zone using both protocols, and all other zones using the native protocol only (because it will interwork the call only if one of the endpoints is locally registered).
- If **Interworking mode** is set to *On*, or the request has come from a locally registered endpoint, the VCS searches the Local Zone and all external zones using both protocols.

Enabling SIP endpoints to dial H.323 numbers

SIP endpoints can only make calls in the form of URIs — such as **`name@domain`**. If the caller does not specify a domain when placing the call, the SIP endpoint automatically appends its own domain to the number that is dialed.

So if you dial **`123`** from a SIP endpoint, the search will be placed for **`123@domain`**. If the H.323 endpoint being dialed is just registered as **`123`**, the VCS will not be able to locate the alias **`123@domain`** and the call will fail. The solutions are to either:

- Ensure all your endpoints, both H.323 and SIP, register with an alias in the form **name@domain**.
- Create a pre-search transform on the VCS that strips the **@domain** portion of the alias for those URIs that are in the form of **number@domain**.
  See the pre-search transforms section for information about how to configure pre-search transforms, and the stripping @domain for dialing to H.323 numbers section for an example of how to do this.

Registration control

This section provides information about the pages that appear under the **Configuration > Registration** menu.

About registrations 118
About Allow and Deny Lists 122
Configuring Registration Policy to use an external service 124

About registrations

For an endpoint to use the VCS as its H.323 gatekeeper or SIP registrar, the endpoint must first register with the VCS. The VCS can be configured to control which devices are allowed to register with it by using the following mechanisms:

- a device authentication process based on the username and password supplied by the endpoint
- a registration restriction policy that uses either Allow Lists or Deny Lists or an external policy service to specify which aliases can and cannot register with the VCS
- restrictions based on IP addresses and subnet ranges through the specification of subzone membership rules and subzone registration policies

You can use these mechanisms together. For example, you can use authentication to verify an endpoint's identity from a corporate directory, and registration restriction to control which of those authenticated endpoints may register with a particular VCS.

You can also control some protocol-specific behavior, including:

- the **Registration conflict mode** and **Auto discover** settings for H.323 registrations
- the **SIP registration proxy mode** for SIP registrations

For specific information about how registrations are managed across peers in a cluster, see the Sharing registrations across peers [p.190] section.

In a Unified Communications deployment, endpoint registration for SIP devices may be provided by Unified CM. In this scenario, the VCS provides secure firewall traversal and line-side support for Unified CM registrations. When configuring domains, you must select the system - either *Unified CM* or *VCS* to provide registration services for each domain.

Finding a VCS with which to register

Before an endpoint can register with a VCS, it must determine which VCS it can or should be registering with. This setting is configured on the endpoint, and the process is different for SIP and H.323.

Registrations on a VCS Expressway

If a traversal-enabled endpoint registers directly with a VCS Expressway, the VCS Expressway will provide the same services to that endpoint as a VCS Control, with the addition of firewall traversal. Traversal-enabled endpoints include all Cisco TelePresence Expressway™ endpoints and third-party endpoints which support the ITU H.460.18 and H.460.19 standards.

Endpoints that are not traversal-enabled can still register with a VCS Expressway, but they may not be able to make or receive calls through the firewall successfully. This will depend on a number of factors:

- whether the endpoint is using SIP or H.323
- the endpoint's position in relation to the firewall
- whether there is a NAT in use
- whether the endpoint is using a public IP address

For example, if an endpoint is behind a NAT or firewall, it may not be able to receive incoming calls and may not be able to receive media for calls it has initiated. SIP endpoints can also work behind a NAT but can only receive video if they send it as well.

To ensure firewall traversal will work successfully for H.323 endpoints behind a NAT, the endpoint must be traversal-enabled.

MCU, gateway and Content Server registration

H.323 systems such as gateways, MCUs and Content Servers can also register with a VCS. They are known as locally registered services. These systems are configured with their own prefix, which they provide to the VCS when registering. The VCS will then know to route all calls that begin with that prefix to the gateway, MCU or Content Server as appropriate. These prefixes can also be used to control registrations.

SIP devices cannot register prefixes. If your dial plan dictates that a SIP device should be reached via a particular prefix, then you should add the device as a neighbor zone with an associated search rule using a pattern match equal to the prefix to be used.

Note that the Cisco TelePresence MPS 200 and MPS 800, and the Cisco TelePresence Content Server both support Expressway. They can therefore register directly with a VCS Expressway for firewall traversal.

Configuring registration restriction policy

The **Registration configuration** page (**Configuration > Registration > Configuration**) is used to control how the VCS manages its registrations.

The **Restriction policy** option specifies the policy to use when determining which endpoints may register with the VCS. The options are:

- *None*: any endpoint may register.
- *Allow List*: only those endpoints with an alias that matches an entry in the Allow List may register.
- *Deny List*: all endpoints may register, unless they match an entry on the Deny List.
- *Policy service*: only endpoints that register with details allowed by the external policy service may register.

The default is *None*.

If you use an *Allow List* or *Deny List*, you must also go to the appropriate Registration Allow List or Registration Deny List configuration page to create the list.

The *Policy service* option is used if you want to refer all registration restriction policy decisions out to an external service. If you select this option an extra set of configuration fields appear so that you can specify the connection details of the external service. See Configuring Registration Policy to use an external service [p.124].

Registering aliases

After the device authentication process (if required) has been completed, the endpoint will then attempt to register its aliases with the VCS.

H.323

When registering, the H.323 endpoint presents the VCS with one or more of the following:

- one or more H.323 IDs
- one or more E.164 aliases
- one or more URIs

Users of other registered endpoints can then call the endpoint by dialing any of these aliases.

- You are recommended to register your H.323 endpoints using a URI. This facilitates interworking between SIP and H.323, as SIP endpoints register using a URI as standard.
- You are recommended to not use aliases that reveal sensitive information. Due to the nature of H.323, call setup information is exchanged in an unencrypted form.

SIP

When registering, the SIP endpoint presents the VCS with its contact address (IP address) and logical address (Address of Record). The logical address is considered to be its alias, and will generally be in the form of a URI.

H.350 directory authentication and registrations

If the VCS is using an H.350 directory service to authenticate registration requests, the **Source of aliases for registration** setting is used to determine which aliases the endpoint is allowed to attempt to register with. See Using an H.350 directory service lookup via LDAP [p.145] for more information.

Attempts to register using an existing alias

An endpoint may attempt to register with the VCS using an alias that is already registered to the system. How this is managed depends on how the VCS is configured and whether the endpoint is SIP or H.323.

- **H.323**: an H.323 endpoint may attempt to register with the VCS using an alias that has already been registered on the VCS from another IP address. You can control how the VCS behaves in this situation by configuring the **Registration conflict mode**, on the H.323 page (**Configuration > Protocols > H.323**).
- **SIP**: a SIP endpoint will always be allowed to register using an alias that is already in use from another IP address. When a call is received for this alias, all endpoints registered using that alias will be called simultaneously. This SIP feature is known as “forking”.

Blocking registrations

If you have configured the VCS to use a Deny List, you will have an option to block the registration. This will add all the aliases used by that endpoint to the Deny List.

Removing existing registrations

After a restriction policy has been activated, it controls all registration requests from that point forward. However, any existing registrations may remain in place, even if the new list would otherwise block them. Therefore, you are recommended to manually remove all existing unwanted registrations after you have implemented a restriction policy.

To manually remove a registration, go to **Status > Registrations > By device**, select the registrations you want to remove, and click **Unregister**.

If the registered device is in an active call and its registration is removed (or expires), the effect on the call is dependent on the protocol:

- **H.323**: the call is taken down.
- **SIP**: the call stays up by default. This SIP behavior can be changed but only via the CLI by using the command **`xConfiguration SIP Registration Call Remove`**.

Re-registrations

All endpoints must periodically re-register with the VCS in order to keep their registration active. If you do not manually delete the registration, the registration could be removed when the endpoint attempts to re-register, but this depends on the protocol being used by the endpoint:

- H.323 endpoints may use "light" re-registrations which do not contain all the aliases presented in the initial registration, so the re-registration may not get filtered by the restriction policy. If this is the case, the registration will not expire at the end of the registration timeout period and must be removed manually.
- SIP re-registrations contain the same information as the initial registrations so will be filtered by the restriction policy. This means that, after the list has been activated, all SIP registrations will disappear at the end of their registration timeout period.

The frequency of re-registrations is determined by the **Registration expire delta** setting for SIP (**Configuration > Protocols > SIP**) and the **Time to live** setting for H.323 (**Configuration > Protocols > H.323**).

About Allow and Deny Lists

When an endpoint attempts to register with the VCS it presents a list of aliases. One of the methods provided by the VCS to control which endpoints are allowed to register is to set the **Restriction policy** (on the Configuring registration restriction policy [p.119] page) to *Allow List* or *Deny List* and then to include any one of the endpoint's aliases on the Allow List or the Deny List as appropriate. Each list can contain up to 2,500 entries.

When an endpoint attempts to register, each of its aliases is compared with the patterns in the relevant list to see if it matches. Only one of the aliases needs to appear in the Allow List or the Deny List for the registration to be allowed or denied.

For example, if the **Restriction policy** is set to *Deny List* and an endpoint attempts to register using three aliases, one of which matches a pattern on the Deny List, that endpoint's registration will be denied. Likewise, if the **Restriction policy** is set to *Allow List*, only one of the endpoint's aliases needs to match a pattern on the Allow List for it to be allowed to register using all its aliases.

Allow Lists and Deny Lists are mutually exclusive: only one may be in use at any given time. You can also control registrations at the subzone level. Each subzone's registration policy can be configured to allow or deny registrations assigned to it via the subzone membership rules.

Configuring the registration Allow List

The **Registration Allow List** page (**Configuration > Registration > Allow List**) shows the endpoint aliases and alias patterns that are allowed to register with the VCS. Only one of an endpoint's aliases needs to match an entry in the Allow List for the registration to be allowed.

To use the Allow List, you must select a **Restriction policy** of *Allow List* on the Registration configuration page.

The configurable options are:

Field	Description	Usage tips
Description	An optional free-form description of the entry.	
Pattern type	The way in which the **Pattern string** must match the alias. Options are: *Exact*: the alias must match the pattern string exactly. *Prefix*: the alias must begin with the pattern string. *Suffix*: the alias must end with the pattern string. *Regex*: the pattern string is a regular expression.	You can test whether a pattern matches a particular alias by using the **Check pattern** tool (**Maintenance > Tools > Check pattern**).
Pattern string	The pattern against which an alias is compared.	

Configuring the registration Deny List

The **Registration Deny List** page (**Configuration > Registration > Deny List**) shows the endpoint aliases and alias patterns that are **not** allowed to register with the VCS. Only one of an endpoint's aliases needs to match an entry in the Deny List for the registration to be denied.

To use the Deny List, you must select a **Restriction policy** of *Deny List* on the Registration configuration page.

The configurable options are:

Field	Description	Usage tips
Description	An optional free-form description of the entry.	
Pattern type	The way in which the **Pattern string** must match the alias. Options are: *Exact*: the alias must match the pattern string exactly. *Prefix*: the alias must begin with the pattern string. *Suffix*: the alias must end with the pattern string. *Regex*: the pattern string is a regular expression.	You can test whether a pattern matches a particular alias by using the Check pattern tool (**Maintenance > Tools > Check pattern**).
Pattern string	The pattern against which an alias is compared.	

Configuring Registration Policy to use an external service

To configure Registration Policy to refer all registration restriction policy decisions out to an external service:

1. Go to **Configuration > Registration > Configuration**.
2. Select a **Restriction policy** of *Policy service*.
3. Configure the fields as follows:

Field	Description	Usage tips
Protocol	The protocol used to connect to the policy service. The default is *HTTPS*.	The VCS automatically supports HTTP to HTTPS redirection when communicating with the policy service server.
Certificate verification mode	When connecting over HTTPS, this setting controls whether the certificate presented by the policy server is verified. If *On*, for the VCS to connect to a policy server over HTTPS, the VCS must have a root CA certificate loaded that authorizes that server's server certificate. Also the certificate's Subject Common Name or Subject Alternative Name must match one of the **Server address** fields below.	The VCS's root CA certificates are loaded via (**Maintenance > Security certificates > Trusted CA certificate**).
HTTPS certificate revocation list (CRL) checking	Enable this option if you want to protect certificate checking using CRLs and you have manually loaded CRL files, or you have enabled automatic CRL updates.	Go to **Maintenance > Security certificates > CRL management** to configure how the VCS uploads CRL files.
Server address 1 - 3	Enter the IP address or Fully Qualified Domain Name (FQDN) of the server hosting the service. You can specify a port by appending `:<port>` to the address.	If an FQDN is specified, ensure that the VCS has an appropriate DNS configuration that allows the FQDN to be resolved. For resiliency, up to three server addresses can be supplied.
Path	Enter the URL of the service on the server.	
Status path	The **Status path** identifies the path from where the VCS can obtain the status of the remote service. The default is *status*.	The policy server must supply return status information, see Policy server status and resiliency [p.363].
Username	The username used by the VCS to log in and query the service.	
Password	The password used by the VCS to log in and query the service.	The maximum plaintext length is 30 characters (which is subsequently encrypted).

Field	Description	Usage tips
Default CPL	This is the fallback CPL used by the VCS if the service is not available.	You can change it, for example, to redirect to an answer service or recorded message. For more information, see Default CPL for policy services [p.519].

4. Click **Save**.
   The VCS should connect to the policy service server and start using the service for Registration Policy decisions.
   Any connection problems will be reported on this page. Check the **Status** area at the bottom of the page and check for additional information messages against the **Server address** fields.

Device authentication

This section provides information about the VCS's authentication policy and the pages that appear under the **Configuration > Authentication** menu.

About device authentication 127
Authenticating with external systems 154

About device authentication

Device authentication is the verification of the credentials of an incoming request to the Cisco TelePresence Video Communication Server (VCS) from a device or external system. It is used so that certain functionality may be reserved for known and trusted users, for example the publishing of presence status, collection of provisioning data, or the ability to use resources that cost money like ISDN gateway calling.

When device authentication is enabled on a VCS, any device that attempts to communicate with the VCS is challenged to present its credentials (typically based on a username and password). The VCS will then verify those credentials, or have them verified, according to the authentication method, and then accept or reject the message accordingly.

VCS authentication policy can be configured separately for each zone and subzone. This means that both authenticated and unauthenticated devices could be allowed to register to, and communicate with, the same VCS if required. Subsequent call routing decisions can then be configured with different rules based upon whether a device is authenticated or not.

The VCS attempts to verify the credentials presented to it by first checking against its on-box local database of usernames and passwords. The local database also includes checking against credentials supplied by Cisco TMS if your system is using device provisioning. If the username is not found in the local database, the VCS may then attempt to verify the credentials via a real-time LDAP connection to an external H.350 directory service. The directory service, if configured, must have an H.350 directory schema for either a Microsoft Active Directory LDAP server or an OpenLDAP server.

You can also configure a VCS Expressway so that the credential checking of SIP messages is delegated, via a traversal zone, to another VCS.

Along with one of the above methods, for those devices that support NTLM challenges, the VCS can alternatively verify credentials via direct access to an Active Directory server using a Kerberos connection.

The various VCS authentication entry points and credential checking methods are shown below:

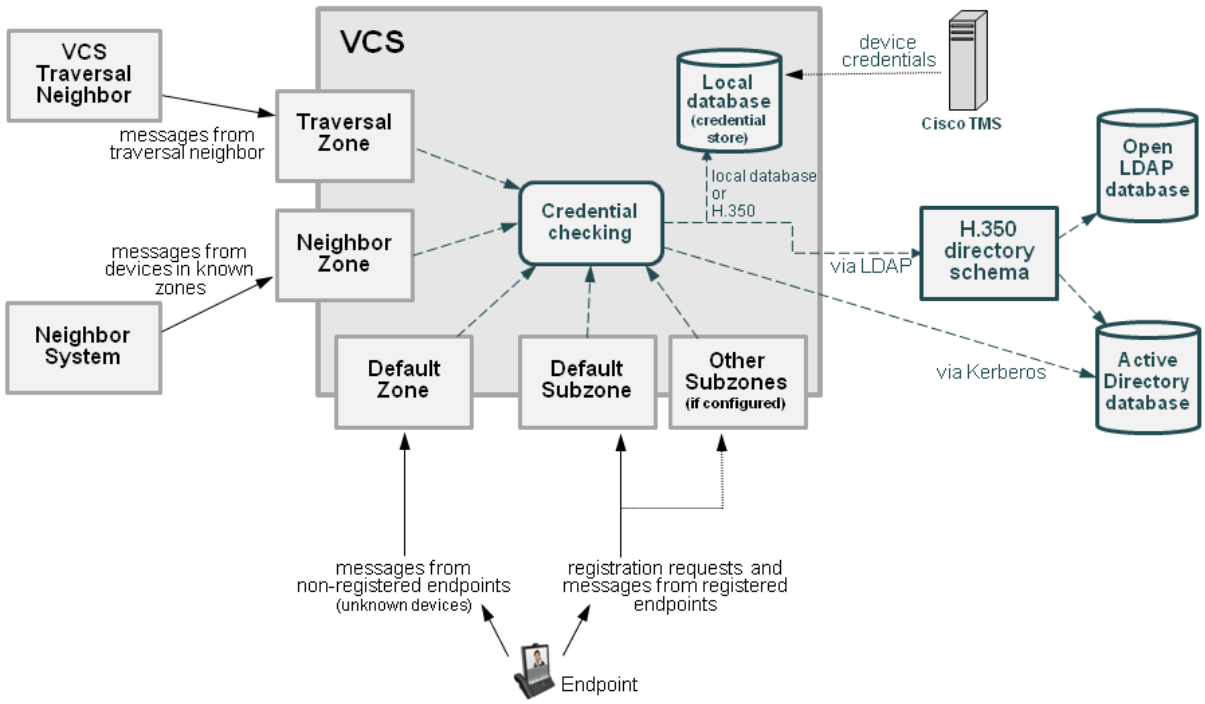

Unified Communications mobile and remote access devices

You do not have to make any explicit configuration on the VCS regarding the authentication of devices that are registering to Unified CM via the VCS. The VCS automatically handles the authentication of these devices against its home Unified CM cluster.

Configuring VCS authentication policy

Authentication policy is applied by the VCS at the zone and subzone levels. It controls how the VCS challenges incoming messages (for provisioning, registration, presence, phone books and calls) from that zone or subzone and whether those messages are rejected, treated as authenticated, or treated as unauthenticated within the VCS.

Each zone and subzone can set its **Authentication policy** to either *Check credentials*, *Do not check credentials*, or *Treat as authenticated*.

- Registration authentication is controlled by the Default Subzone (or relevant alternative subzone) configuration.
- Initial provisioning subscription request authentication is controlled by the Default Zone configuration.
- Call, presence, and phone book request authentication is controlled by the Default Subzone (or relevant alternative subzone) if the endpoint is registered, or by the Default Zone if the endpoint is not registered.

Note that the exact authentication policy behavior depends on whether the messages are H.323 messages, SIP messages received from local domains, or SIP messages received from non-local domains. See Authentication policy configuration options [p.130] for a full description of the various authentication policy behaviors.

Zone-level authentication policy

Authentication policy is configurable for zones that receive messaging; the Default Zone, neighbor zones, traversal client and traversal server zones all allow configuration of authentication policy; DNS and ENUM zones do not receive messaging and so have no configuration.

To configure a zone's **Authentication policy**, go to **Configuration > Zones > Zones**, then click View/Edit or the name of the zone. The policy is set to *Do not check credentials* by default when a new zone is created.

Subzone-level authentication policy

Authentication policy is configurable for the Default Subzone and any other configured subzone.

To configure a subzone's **Authentication policy**, go to **Configuration > Local Zone > Subzones**, then click View/Edit or the name of the subzone. The policy is set to *Do not check credentials* by default when a new subzone is created.

Provisioning and device authentication

The Provisioning Server requires that any provisioning or phone book requests it receives have already been authenticated at the zone or subzone point of entry into the VCS. The Provisioning Server does not do its own authentication challenge and will reject any unauthenticated messages.

See Device provisioning and authentication policy [p.137] for more information.

Presence and device authentication

The Presence Server accepts presence PUBLISH messages only if they have already been authenticated:

- The authentication of presence messages by the VCS is controlled by the authentication policy setting on the Default Subzone (or relevant alternative subzone) if the endpoint is registered (which is the usual case), or by the authentication policy setting on the Default Zone if the endpoint is not registered.
- The relevant **Authentication policy** must be set to either *Check credentials* or *Treat as authenticated*, otherwise PUBLISH messages will fail, meaning that endpoints will not be able to publish their presence status.

See Presence and authentication policy [p.139] for more information.

Controlling system behavior for authenticated and non-authenticated devices

How calls and other messaging from authenticated and non-authenticated devices are handled depends on how search rules, external policy services and CPL are configured.

Search rules

When configuring a search rule, use the **Request must be authenticated** attribute to specify whether the search rule applies only to authenticated search requests or to all requests.

External policy services

External policy services are typically used in deployments where policy decisions are managed through an external, centralized service rather than by configuring policy rules on the VCS itself. You can configure the VCS to use policy services in the following areas:

- Registration Policy
- Search rules (dial plan)
- Call Policy
- User Policy (FindMe)

When the VCS uses a policy service it sends information about the call or registration request to the service in a POST message using a set of name-value pair parameters. Those parameters include information about whether the request has come from an authenticated source or not.

More information about policy services, including example CPL, can be found in *External Policy on VCS Deployment Guide*.

CPL

If you are using the Call Policy rules generator on the VCS, source matches are carried out against authenticated sources. To specify a match against an unauthenticated source, just use a blank field. (If a source is not authenticated, its value cannot be trusted).

If you use uploaded, handcrafted local CPL to manage your Call Policy, you are recommended to make your CPL explicit as to whether it is looking at the authenticated or unauthenticated origin.

- If CPL is required to look at the unauthenticated origin (for example, when checking non-authenticated callers) the CPL must use `unauthenticated-origin`. (However, if the user is unauthenticated, they can call themselves whatever they like; this field does not verify the caller.)
- To check the authenticated origin (only available for authenticated or "treat as authenticated" devices) the CPL should use `authenticated-origin`.

Note that due to the complexity of writing CPL scripts, you are recommended to use an external policy service instead.

Authentication policy configuration options

Authentication policy behavior varies for H.323 messages, SIP messages received from local domains and SIP messages from non-local domains.

The primary authentication policy configuration options and their associated behavior are as follows:

- **Check credentials**: verify the credentials using the relevant authentication method. Note that in some scenarios, messages are not challenged, see below.
- **Do not check credentials**: do not verify the credentials and allow the message to be processed.
- **Treat as authenticated**: do not verify the credentials and allow the message to be processed as if it is has been authenticated. This option can be used to cater for endpoints from third-party suppliers that do not support authentication within their registration mechanism. Note that in some scenarios, messages are allowed but will still be treated as though they are unauthenticated, see below.

The following tables summarize the policy behavior when applied at the zone and subzone level, and how it varies depending on the message protocol.

Zone-level authentication policy

Authentication policy is configurable for zones that receive messaging; the Default Zone, neighbor zones, traversal client and traversal server zones all allow configuration of authentication policy; DNS and ENUM zones do not receive messaging and so have no configuration.

To configure a zone's **Authentication policy**, go to **Configuration > Zones > Zones**, then click View/Edit or the name of the zone. The policy is set to *Do not check credentials* by default when a new zone is created.

The behavior varies for H.323 and SIP messages as shown in the tables below:

H.323

Policy	Behavior
Check credentials	Messages are classified as either authenticated or unauthenticated depending on whether any credentials in the message can be verified against the authentication database. If no credentials are supplied, the message is always classified as unauthenticated.
Do not check credentials	Message credentials are not checked and all messages are classified as unauthenticated.
Treat as authenticated	Message credentials are not checked and all messages are classified as authenticated.

SIP

The behavior for SIP messages at the zone level depends upon the **SIP authentication trust mode** setting (meaning whether the VCS trusts any pre-existing authenticated indicators - known as P-Asserted-Identity headers - within the received message) and whether the message was received from a local domain (a domain for which the VCS is authoritative) or a non-local domain.

Policy	Trust	In local domain	Outside local domain
Check credentials	Off	Messages are challenged for authentication. Messages that fail authentication are rejected. Messages that pass authentication are classified as authenticated and a P-Asserted-Identity header is inserted into the message.	Messages are not challenged for authentication. All messages are classified as unauthenticated. Any existing P-Asserted-Identity headers are removed.
	On	Messages with an existing P-Asserted-Identity header are classified as authenticated, without further challenge. The P-Asserted-Identity header is passed on unchanged (keeping the originator's asserted ID). Messages without an existing P-Asserted-Identity header are challenged. If authentication passes, the message is classified as authenticated and a P-Asserted-Identity header is inserted into the message. If authentication fails, the message is rejected.	Messages are not challenged for authentication. Messages with an existing P-Asserted-Identity header are classified as authenticated, and the header is passed on unchanged. Messages without an existing P-Asserted-Identity header are classified as unauthenticated.
Do not check credentials	Off	Messages are not challenged for authentication. All messages are classified as unauthenticated. Any existing P-Asserted-Identity headers are removed.	Messages are not challenged for authentication. All messages are classified as unauthenticated. Any existing P-Asserted-Identity headers are removed.
	On	Messages are not challenged for authentication. Messages with an existing P-Asserted-Identity header are classified as authenticated, and the header is passed on unchanged. Messages without an existing P-Asserted-Identity header are classified as unauthenticated.	Messages are not challenged for authentication. Messages with an existing P-Asserted-Identity header are classified as authenticated, and the header is passed on unchanged. Messages without an existing P-Asserted-Identity header are classified as unauthenticated.
Treat as authenticated	Off	Messages are not challenged for authentication. All messages are classified as authenticated. Any existing P-Asserted-Identity header is removed and a new one containing the VCS's originator ID is inserted into the message.	Messages are not challenged for authentication. All messages are classified as unauthenticated. Any existing P-Asserted-Identity headers are removed.

Policy	Trust	In local domain	Outside local domain
	On	Messages are not challenged for authentication. All messages are classified as authenticated. Messages with an existing P-Asserted-Identity header are passed on unchanged. Messages without an existing P-Asserted-Identity header have one inserted.	Messages are not challenged for authentication. Messages with an existing P-Asserted-Identity header are classified as authenticated, and the header is passed on unchanged. Messages without an existing P-Asserted-Identity header are classified as unauthenticated.

Subzone-level authentication policy

Authentication policy is configurable for the Default Subzone and any other configured subzone.

To configure a subzone's **Authentication policy**, go to **Configuration > Local Zone > Subzones**, then click View/Edit or the name of the subzone. The policy is set to *Do not check credentials* by default when a new subzone is created.

The behavior varies for H.323 and SIP messages as shown in the tables below:

H.323

Policy	Behavior
Check credentials	Messages are classified as either authenticated or unauthenticated depending on whether any credentials in the message can be verified against the authentication database. Messages that pass authentication are classified as authenticated. If no credentials are supplied, the message is always classified as unauthenticated. Note that unauthenticated registration requests are rejected.
Do not check credentials	Message credentials are not checked and all messages are classified as unauthenticated.
Treat as authenticated	Message credentials are not checked and all messages are classified as authenticated.

SIP

The behavior for SIP messages depends upon whether the message was received from a local domain (a domain for which the VCS is authoritative) or a non-local domain.

Policy	In local domain	Outside local domain
Check credentials	Messages are challenged for authentication and those that pass are classified as authenticated. Messages (including registration requests) that fail authentication are rejected.	SIP messages received from non-local domains are all treated in the same manner, regardless of the subzone's **Authentication policy** setting: Messages are not challenged for authentication. All messages are classified as unauthenticated.
Do not check credentials	Messages are not challenged for authentication. All messages are classified as unauthenticated.	
Treat as authenticated	Messages are not challenged for authentication. All messages are classified as authenticated.	

SIP authentication trust

If the VCS is configured to use device authentication it will authenticate incoming SIP registration and INVITE requests. If the VCS then forwards the request on to a neighbor zone such as another VCS, that receiving system will also authenticate the request. In this scenario the message has to be authenticated at every hop.

To simplify this so that a device's credentials only have to be authenticated once (at the first hop), and to reduce the number of SIP messages in your network, you can configure neighbor zones to use the **Authentication trust mode** setting.

This is then used in conjunction with the zone's authentication policy to control whether pre-authenticated SIP messages received from that zone are trusted and are subsequently treated as authenticated or unauthenticated within the VCS. Pre-authenticated SIP requests are identified by the presence of a P-Asserted-Identity field in the SIP message header as defined by *RFC 3325*.

The **Authentication trust mode** settings are:

- *On*: pre-authenticated messages are trusted without further challenge and subsequently treated as authenticated within the VCS. Unauthenticated messages are challenged if the **Authentication policy** is set to *Check credentials*.
- *Off*: any existing authenticated indicators (the P-Asserted-Identity header) are removed from the message. Messages from a local domain are challenged if the **Authentication policy** is set to *Check credentials*.

Note:

- We recommend that you enable authentication trust only if the neighbor zone is part of a network of trusted SIP servers.
- Authentication trust is automatically implied between traversal server and traversal client zones.

Configuring delegated credential checking (SIP only)

By default, the VCS uses the relevant credential checking mechanisms (local database, Active Directory Service or H.350 directory via LDAP) on the same VCS that is performing the authentication challenge.

Alternatively you can configure the VCS that is performing the authentication challenges to delegate the credential checking of SIP messages, via a traversal zone, to another VCS (typically a VCS Control). Delegated credential checking is useful in deployments where you want to allow devices to register on the VCS Expressway (so that, for example, calls may be made without having to use a traversal license), but for security you want all communications with authentication systems (such as an Active Directory server) to be performed inside the enterprise.

- Credential checking for both SIP Digest and NTLM messages may be delegated.
- All messages must be for locally-defined SIP domains. You can delegate credential checking to different traversal clients on a per domain basis if required.

The following diagram shows how incoming SIP messages (calls, registrations and so on) are challenged by the VCS Expressway, but the checking of the credentials presented in response to those challenges is delegated to the VCS Control.

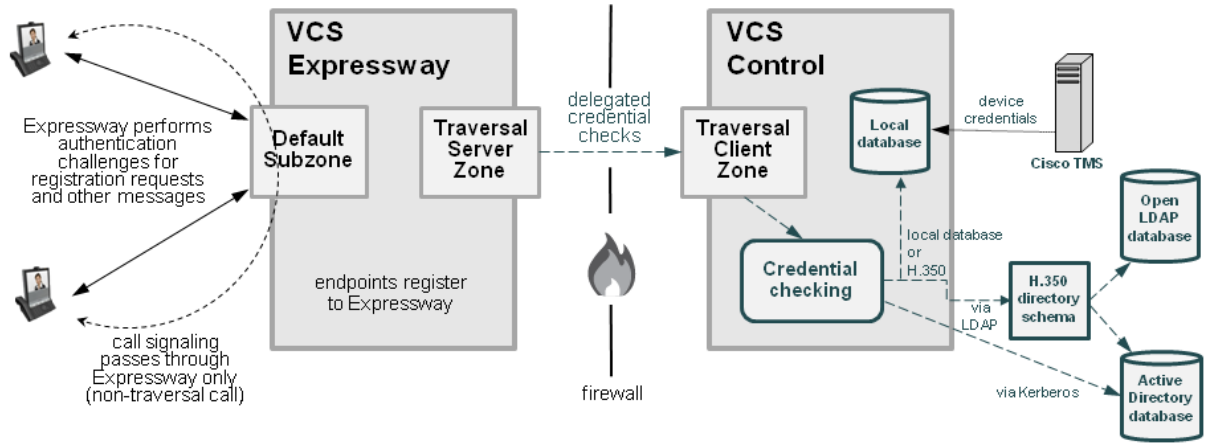

Configuring your video communications network for delegated credential checking

Several configuration steps are involved, on both your VCS Expressway and your VCS Control, in setting up your video network for delegated credential checking.

It is likely that much of this configuration, such as the set of local SIP domains, will already be in place, however the sections below list all of the necessary configuration requirements.

VCS Expressway and VCS Control

There must be a secure traversal zone connection between the VCS Control and the VCS Expressway:

- The VCS Control and VCS Expressway must be configured with a zone of type *Unified Communications traversal*. This automatically configures an appropriate traversal zone (a traversal client zone when selected on a VCS Control, or a traversal server zone when selected on a VCS Expressway) that uses SIP TLS with **TLS verify mode** set to *On*, and **Media encryption mode** set to *Force encrypted*.

- Both VCSs must trust each other's server certificate. As each VCS acts both as a client and as a server you must ensure that each VCS's certificate is valid both as a client and as a server.
- If an H.323 or a non-encrypted connection is also required, a separate pair of traversal zones must be configured.

VCS Control

1. Configure SIP domains (**Configuration > Domains**).
   It must be configured with all of the domains for which it will receive delegated authentication checks.
2. Configure the relevant authentication mechanisms (local database, Active Directory Service or H.350 directory via LDAP).
3. Enable **Delegated credential checking** (**Configuration > Protocols > SIP**).
4. Ensure that the traversal client zone is configured to **Accept delegated credential checks**.

VCS Expressway

1. Configure SIP domains (**Configuration > Domains**).
   It must be configured with all of the domains for which it will delegate authentication checks.
2. For each domain, choose the traversal zone over which the credential checks are to be delegated.
3. If NTLM / Active Directory Service authentication is required, ensure that **NTLM protocol challenges** (**Configuration > Authentication > Devices > Active Directory Service**) is set to *Auto*.
4. Enable **Delegated credential checking** on the **SIP** page (**Configuration > Protocols > SIP**).
5. Ensure that the relevant zone and subzone authentication policies are set to *Check credentials*.
   Note that any H.323 messages that arrive at the zones or subzones that are now configured to *Check credentials* will still have those credentials checked via the relevant mechanisms (such as the local database or H.350 directory) on that local VCS and they will not be delegated.
6. If required as part of your dial plan, configure search rules that forward SIP call signaling messages to the relevant traversal client zones.
   (Note that no specific search rules are required to support the delegation of authentication messages to the VCS Control.

The credential checking of authentication challenges made by the VCS Expressway should now be delegated through the traversal zone to the VCS Control.

Testing the credential checking service

To verify whether the VCS to which credential checking has been delegated is able to receive messages and perform the relevant authentication checks:

1. Go to **Configuration > Domains**.
2. Select the relevant domains.
3. Click **Test credential checking service**.
   The system displays a **Results** section and reports whether the receiving VCS can be reached over the traversal zone and, additionally, if it is able to perform credential checking for both NTLM and SIP digest type challenges.
   If you are not using NTLM authentication in your video network, and thus the receiving VCS is not configured with a connection to an Active Directory Service, then the NTLM check will be expected to fail.

TURN services

If TURN services are enabled on the VCS Expressway and you also want to delegate the credential checking of TURN server requests:

1. Go to **Configuration > Traversal > TURN**.
2. Set **Delegated credential checking** to *On*.
3. For the **Authentication realm**, choose from the set of configured SIP domains to determine the traversal zone through which credential checking is delegated.

Additional information

- The system clocks on the VCS Control and the VCS Expressway must be within 100 seconds of each other. We recommend that all VCSs are configured to use a common NTP server.
- The VCS Expressway can still perform "local" non-delegated authentication for specific domains. If this is required, ensure that:
  - Those domains have **Traversal zone for delegated credential checking** set to *Do not delegate*.
  - The relevant authentication mechanisms are configured on the VCS Expressway.
- The VCS Control can still perform authentication in the normal manner, as well as providing a delegated credential checking service for the VCS Expressway. Note that:
  - The **NTLM protocol challenges** setting on the VCS Control only applies if the VCS Control itself is making an authentication challenge.
  - The authentication policy configuration on the traversal client on the VCS Control has no effect on the delegated credential checking requests received by the VCS Control.

  Enabling delegated credential checking does not affect any other message routing; there is no need to amend any existing transforms, search rules and so on.

Device provisioning and authentication policy

The Provisioning Server requires that any provisioning or phone book requests it receives have already been authenticated at the zone or subzone point of entry into the VCS. The Provisioning Server does not do its own authentication challenge and will reject any unauthenticated messages.

The following diagram shows the flow of provisioning messages from an endpoint to the Provisioning Server, together with the credential checking processes:

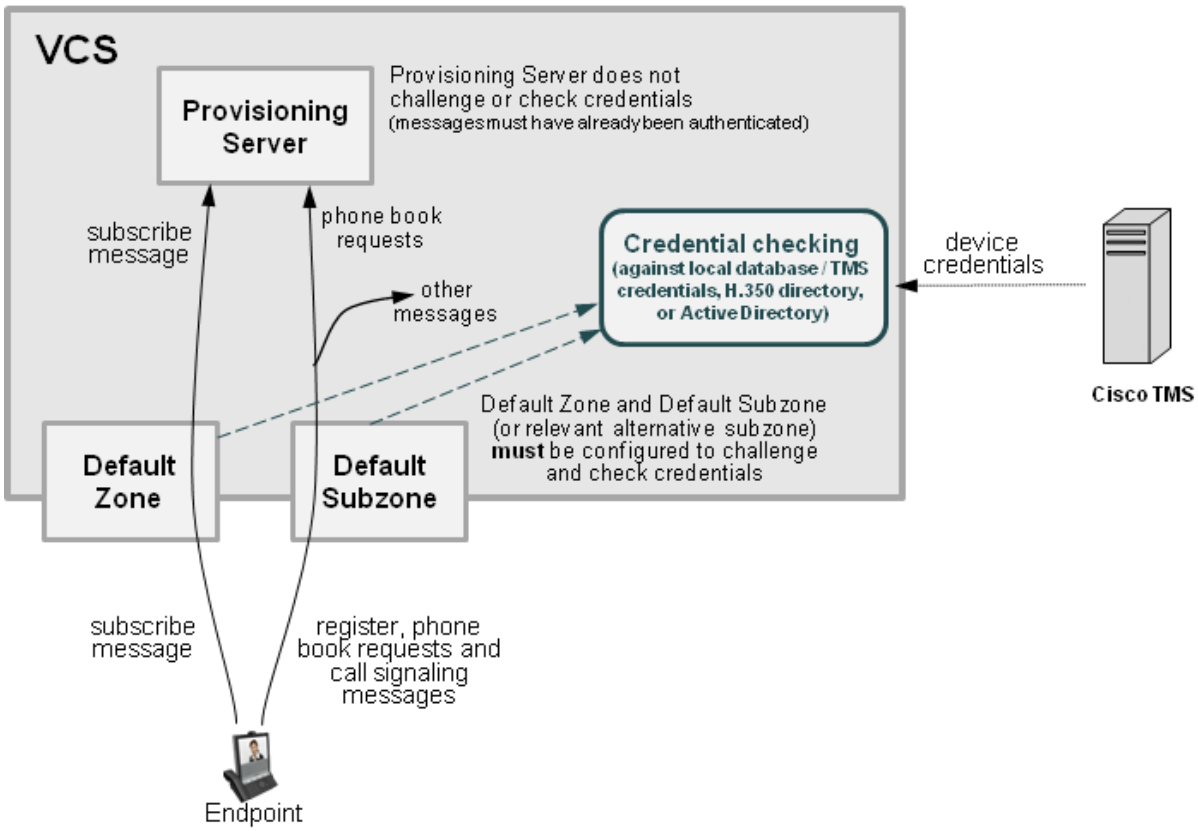

The VCS must be configured with appropriate device authentication settings, otherwise provisioning-related messages will be rejected:

- Initial provisioning authentication (of a subscribe message) is controlled by the authentication policy setting on the Default Zone. (The Default Zone is used as the device is not yet registered.)
  The Default Zone and any traversal client zone's authentication policy must be set to either *Check credentials* or *Treat as authenticated*, otherwise provisioning requests will fail.
- The authentication of subsequent messages, including registration requests, phone book requests and call signaling messages is controlled by the authentication policy setting on the Default Subzone (or relevant alternative subzone) if the endpoint is registered (which is the usual case), or by the authentication policy setting on the Default Zone if the endpoint is not registered.
  The relevant authentication policy must be set to either *Check credentials* or *Treat as authenticated*, otherwise phone book requests will fail.

In each case, the VCS performs its authentication checking against the appropriate credential store, according to whichever authentication methods are configured. Note that if the VCS is using the local database, this will include all credentials supplied by Cisco TMS.

For more information about provisioning configuration in general, see *Cisco TMS Provisioning Extension Deployment Guide*.

VCS Starter Pack Express

The Provisioning Server on a VCS Starter Pack Express operates in the same manner as when using Cisco TMS provisioning – it does not challenge provisioning requests. It provisions devices only if the request has already been authenticated by the VCS (at the zone or subzone entry point).

Presence and authentication policy

The Presence Server accepts presence PUBLISH messages only if they have already been authenticated:

- The authentication of presence messages by the VCS is controlled by the authentication policy setting on the Default Subzone (or relevant alternative subzone) if the endpoint is registered (which is the usual case), or by the authentication policy setting on the Default Zone if the endpoint is not registered.
- The relevant **Authentication policy** must be set to either *Check credentials* or *Treat as authenticated*, otherwise PUBLISH messages will fail, meaning that endpoints will not be able to publish their presence status.

The following diagram shows the flow of presence messages from an endpoint to the Presence Server:

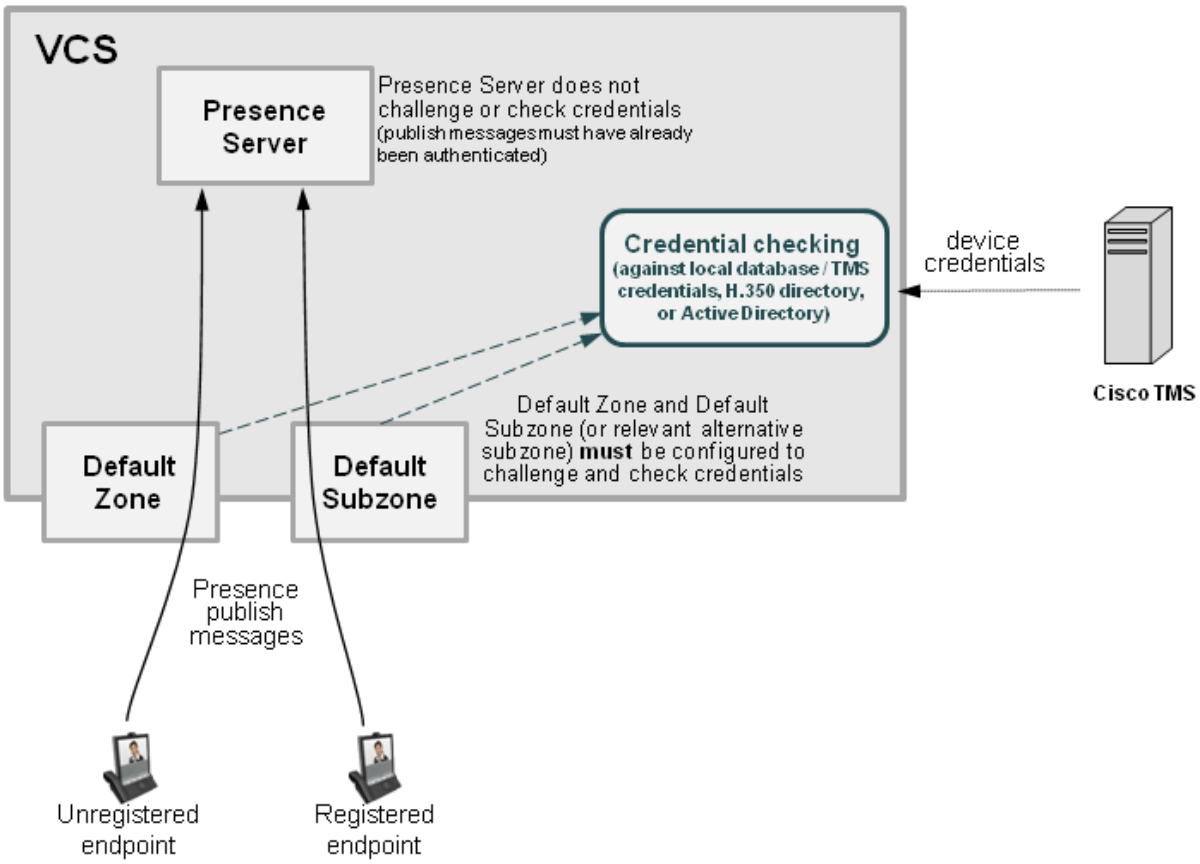

In each case, the VCS performs its authentication checking against the appropriate credential store, according to whichever authentication methods are configured. Note that if the VCS is using the local database, this will include any credentials supplied by Cisco TMS.

Hierarchical dial plans and authentication policy

Hierarchical dial plan (directory VCS) deployments and device authentication

When introducing authentication into video networks which have a hierarchical dial plan with a directory VCS, authentication problems can occur if:

- any VCS in the network uses a different authentication database from any other VCS in the network, and
- credential checking is enabled on the Default Zone of any VCS (as is needed, for example, when using Cisco TMSPE), and
- the directory VCS or any other VCS in a signaling path can optimize itself out of the call routing path

In such deployments, each VCS must be configured with a neighbor zone between itself and every other VCS in the network. Each zone must be configured with an **Authentication policy** of *Do not check credentials*. (No search rules are required for these neighbor zones; the zones purely provide a mechanism for trusting messages between VCSs.)

This is required because, otherwise, some messages such as SIP RE-INVITES, which are sent directly between VCSs (due to optimal call routing), will be categorized as coming from the Default Zone. The VCS will then attempt to authenticate the message and this may fail as it may not have the necessary credentials in its authentication database. This means that the message will be rejected and the call may be dropped. However, if the node VCSs have a neighbor zone relationship then the message will be identified as coming through that neighbor zone, the VCS will not perform any credential checking (as the neighbor zone is set to *Do not check credentials*) and the message will be accepted.

Deployments with multiple regional / subnetwork directory VCSs

If your deployment is segmented into multiple regional subnetworks, each with their own directory VCS, it is not feasible (or recommended) to set up neighbor zones between each and every VCS across the entire network.

In this scenario you should configure each subnetwork as described above – i.e. set up neighbor zones between each of the VCSs managed by the same directory VCS – and then configure the neighbor zones between each directory VCS so that they stay in the call signaling path on calls crossing subnetworks between those directory VCSs. To do this:

1. On the directory VCS, go to **Configuration > Zones > Zones** and then click on the relevant zone to the other directory VCS.
2. On the **Edit zones** page, scroll down to the **Advanced** section and set **Zone profile** to *Custom*.
3. Set **Call signaling routed mode** to *Always*.
4. Click **Save**.
5. Repeat this for the equivalent zone definition on the “other” directory VCS, and then repeat the entire process for any other zone configurations between any other directory VCSs.

Note: do not modify the directory VCS’s primary **Call signaling routed mode** setting on the **Calls** page.

This means that the each directory VCS will stay in the call signaling path for calls that go between subnetworks. Each directory VCS will still be able to optimize itself out of the call signaling path for calls entirely within each subnetwork.

You must also ensure that you have sufficient call licenses (traversal and non-traversal) on each directory VCS to handle those calls going between each subnetwork.

Practical configuration of authentication policy

VCS Control

The table below contains practical guidelines for configuring authentication policy on a VCS Control.

Authentication point	Guideline
Default Zone	Use *Check credentials*.
Default Subzone	Use *Check credentials*.
Specific local subzones	For known local subnets, to avoid having to configure all local endpoints with credentials, use *Treat as authenticated*. Although this is a practical solution, we recommend that no *Treat as authenticated* subzones are used, and that every endpoint is populated with appropriate and unique credentials and that *Check credentials* is used.
Other subzones	Use *Check credentials*.
Traversal zone	Use *Check credentials*. Always check the credentials of requests coming from the VCS Expressway.
Neighbor zone	Use *Do not check credentials* and set **SIP authentication trust mode** to *On*.

VCS Expressway

Ideally, VCS Expressway authentication policy, should follow exactly the same guidelines as for the VCS Control. However if AD Direct or H.350 access is required, many security policies will not allow a device in a DMZ access to those resources. Practicality therefore recommends that authentication is left to the VCS Control. For SIP devices you can use delegated credential checking; this allows SIP devices to register to the VCS Expressway but be authenticated via a device authentication mechanism configured on the VCS Control.

You can also use registration allow and deny lists to limit what can register to the VCS Expressway. If it is required that outbound calls may only be made by authenticated users, ensure that all call requests are routed to the VCS Control and it only forwards requests back that it can authenticate.

Infrastructure devices

You are recommended to configure your VCS so that infrastructure products, such as MCUs, register to a dedicated subzone with an authentication policy set to *Treat as authenticated*.

Configuring VCS authentication methods

The VCS supports 3 different methods of verifying authentication credentials:

- against an on-box local database (which includes any Cisco TMS-supplied credentials)
- via an LDAP connection to an external H.350 directory service
- via direct access to an Active Directory server using a Kerberos connection (NTLM challenges only)

The VCS attempts to verify the credentials presented to it by first checking against its on-box local database of usernames and passwords. The local database also includes checking against credentials supplied by Cisco TMS if your system is using device provisioning. If the username is not found in the local database, the VCS may then attempt to verify the credentials via a real-time LDAP connection to an external H.350

directory service. The directory service, if configured, must have an H.350 directory schema for either a Microsoft Active Directory LDAP server or an OpenLDAP server.

Along with one of the above methods, for those devices that support NTLM challenges, the VCS can alternatively verify credentials via direct access to an Active Directory server using a Kerberos connection. The direct Active Directory authentication via Kerberos method is only supported by a limited range of endpoints – at the time of writing, only Cisco Jabber for iPad and Jabber Video. If used, other non-supported endpoint devices will continue to authenticate using one of the other two authentication methods.

Note that the VCS always challenges an endpoint with a standard Digest challenge. The VCS will additionally send an NTLM challenge if the VCS has NTLM protocol challenges enabled and it recognizes that the endpoint supports NTLM.

If the endpoint receives both challenges, it is the endpoint's decision as to whether to respond to the Digest challenge or to the NTLM challenge. At the time of writing, all supported endpoints respond to an NTLM challenge in preference to a Digest challenge.

The following diagram shows the process followed by the VCS when authenticating credentials:

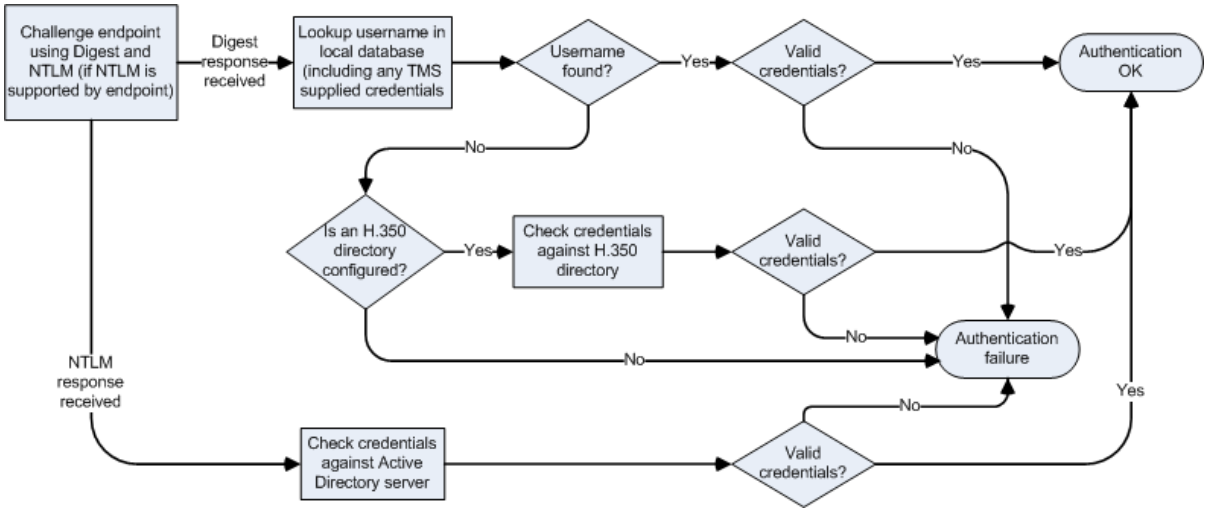

Note that accurate timestamps play an important part in authentication of H.323 devices, helping to guard against replay attacks. For this reason, if you are using device authentication with H.323 devices, both the VCS and the endpoints must use an NTP server to synchronize their system time.

Authentication mechanism

The authentication process uses a username and password-based challenge-response scheme to check a device's credentials.

The actual mechanism used by the device to supply its credentials to the VCS depends on the protocol being used:

- **H.323**: any necessary credentials are contained within the incoming request. (The VCS supports the *ITU H.235 specification* for authenticating the identity of H.323 network devices with which it communicates.)
- **SIP**: credentials are not contained within the initial request. Instead the VCS sends a challenge back to the sender that asks for its credentials. However, if a SIP message has already been authenticated (for

example by another VCS on a previous hop), that system may insert information into the SIP message to show that it has been authenticated. You can control whether the VCS chooses to trust any authentication carried out at an earlier stage by configuring a zone's SIP authentication trust setting.

Note that if the VCS is acting as a traversal server, you must ensure that each traversal client's authentication credentials are entered into the selected database.

Endpoint credentials used for authentication

An endpoint must supply the VCS with a username and password if it is required to authenticate with the VCS, for example when attempting to register and the relevant subzone's **Authentication policy** is set to *Check credentials*.

For Cisco endpoints using H.323, the username is typically the endpoint's **Authentication ID**; for Cisco endpoints using SIP it is typically the endpoint's **Authentication username**.

See the relevant endpoint manual for details about how to configure the endpoint's credentials.

Configuring authentication to use the local database

The local authentication database is included as part of your VCS system and does not require any specific connectivity configuration. It is used to store user account authentication credentials. Each set of credentials consists of a **name** and **password**.

The credentials in the local database can be used for device (SIP and H.323), traversal client and TURN client authentication.

Adding credentials to the local database

To enter a set of device credentials:

1. Go to **Configuration > Authentication > Devices > Local database** and click **New**.
2. Enter the **Name** and **Password** that represent the device's credentials.
3. Click **Create credential**.

Note that the same credentials can be used by more than one device.

Credentials managed within Cisco TMS (for device provisioning)

When the VCS is using TMS Provisioning Extension services, the credentials supplied by the Users service are stored in the local authentication database, along with any manually configured entries. The **Source** column identifies whether the user account name is provided by **TMS**, or is a **Local** entry. Only **Local** entries can be edited.

Incorporating Cisco TMS credentials within the local database means that VCS can authenticate all messages (i.e. not just provisioning requests) against the same set of credentials used within Cisco TMS.

Local database authentication in combination with H.350 directory authentication

You can configure the VCS to use both the local database and an H.350 directory.

If an H.350 directory is configured, the VCS will always attempt to verify any Digest credentials presented to it by first checking against the local database before checking against the H.350 directory.

Local database authentication in combination with Active Directory (direct) authentication

If Active Directory (direct) authentication has been configured and NTLM protocol challenges is set to Auto, then NTLM authentication challenges are offered to those devices that support NTLM.

- NTLM challenges are offered in addition to the standard Digest challenge.
- Endpoints that support NTLM will respond to the NTLM challenge in preference to the Digest challenge, and the VCS will attempt to authenticate that NTLM response.

Starter Pack

If the **Starter Pack** option key is installed, the local authentication database will include a pre-configured set of authentication credentials. To ensure correct operation of the TURN server in conjunction with the Starter Pack, do not delete or modify the **StarterPackTURNUser** entry in the local authentication database.

All other credentials that are required to support Starter Pack provisioned devices have to be added manually for each user account.

Using an H.350 directory service lookup via LDAP

The **Device authentication H.350 configuration** page (**Configuration > Authentication > Devices > H.350 directory service**) is used to configure a connection via LDAP to an H.350 directory service. An H.350 directory service lookup can be used for authenticating any endpoint, SIP and H.323.

H.350 directory authentication and registration process

If the VCS is using an H.350 directory service to authenticate registration requests, the process is as follows:

1. The endpoint presents its username and authentication credentials to the VCS, and the aliases with which it wants to register.
2. The VCS then determines which aliases the endpoint is allowed to attempt to register with, based on the **Source of aliases for registration** setting. For H.323 endpoints, you can use this setting to override the aliases presented by the endpoint with those in the H.350 directory, or you can use them in addition to the endpoint's aliases. For SIP endpoints, you can use this setting to reject a registration if the endpoint's AOR does not match that in the H.350 directory. The options are:
   - *H.350 directory*: for SIP registrations the AOR presented by the endpoint is registered providing it is listed in the H.350 directory for the endpoint's username.
     For H.323 registrations:
     - At least one of the aliases presented by the endpoint must be listed in the H.350 directory for that endpoint's username. If none of the presented aliases are listed it is not allowed to register.
     - The endpoint will register with all of the aliases (up to a maximum of 20) listed in the H.350 directory. Aliases presented by the endpoint that are not in the H.350 directory will not be registered.
     - If no aliases are listed in the H.350 directory, the endpoint will register with all the aliases it presented.
     - If no aliases are presented by the endpoint, it will register with all the aliases listed in the H.350 directory for its username.
   - *Combined*: the aliases presented by the endpoint are used in addition to any listed in the H.350 directory for the endpoint's username. In other words, this is the same as for *H.350 directory*, except that if an endpoint presents an alias that is not in the H.350 directory, it will be allowed to register with that alias.
   - *Endpoint*: the aliases presented by the endpoint are used; any in the H.350 directory are ignored. If no aliases are presented by the endpoint, it is not allowed to register.

   The default is *H.350 directory*.

Note that if the authentication policy is *Do not check credentials* or *Treat as authenticated*, then the **Source of aliases for registration** setting is ignored and the aliases presented by the endpoint are used.

Configuring the LDAP server directory

The H.350 directory on the LDAP server should be configured to implement the *ITU H.350 specification*. it should store credentials for devices with which the VCS communicates, and the aliases of endpoints that will register with the VCS.

1. Download the required H.350 schemas from the VCS (**Configuration > Authentication > Devices > H.350 directory schemas**) and install them on the LDAP server.
2. Configure the directory with the aliases of endpoints that will register with the VCS.
   See LDAP server configuration for device authentication [p.402] for instructions on configuring LDAP servers.

Configuring the LDAP server settings

1. Go to **Configuration > Authentication > Devices > H.350 directory service**.
2. Configure the fields as follows:

Field	Description	Usage tips
H.350 device authentication	Enables or disables the use of an H.350 directory for device authentication.	The H.350 directory can be used in combination with other authentication mechanisms.
Source of aliases for registration	Determines how aliases are checked and registered.	See **H.350 directory authentication and registration process** above for a description of each setting. When **Source of aliases for registration** is *H.350 directory*, MCUs are treated as a special case. They register with the presented aliases and ignore any aliases in the H.350 directory. (This is to allow MCUs to additively register aliases for conferences.)
Server address	The IP address or FQDN (or server address, if a DNS **Domain name** has also been configured) of the LDAP server.	The LDAP server must have the H.350 schemas installed.
FQDN address resolution	Defines how the LDAP **Server address** is resolved if it is specified as an FQDN. *Address record*: DNS A or AAAA record lookup. *SRV record*: DNS SRV record lookup. The default is *Address record*.	DNS SRV lookups enable the VCS to authenticate devices against multiple remote H.350 directory servers. This provides a seamless redundancy mechanism in the event of reachability problems to an H.350 directory server. The SRV lookup is for either _ldap._tcp or _ldap._tls records, depending on whether **Encryption** is enabled. If multiple servers are returned, the priority and weight of each SRV record determines the order in which the servers are used.
Port	The IP port of the LDAP server.	Typically, non-secure connections use *389* and secure connections use *636*.
Encryption	Determines whether the connection to the LDAP server is encrypted using Transport Layer Security (TLS). *TLS*: uses TLS encryption for the connection to the LDAP server. *Off*: no encryption is used. The default is *TLS*.	When TLS is enabled, the LDAP server's certificate must be signed by an authority within the VCS's trusted CA certificates file. Click **Upload a CA certificate file for TLS** (in the **Related tasks** section) to go to the Managing the trusted CA certificate list [p.309] page.
Bind DN	The user distinguished name used by the VCS when binding to the LDAP server.	For example, uid=admin, ou=system
Bind password	The password used by the VCS when binding to the LDAP server.	

Field	Description	Usage tips
Base DN for devices	The area of the directory on the LDAP server to search for credential information. This should be specified as the Distinguished Name (DN) in the LDAP directory under which the H.350 objects reside.	For example, ou=H350,dc=example,dc=com

3. Click **Save**.

The current status of the connection to the specified LDAP server is displayed at the bottom of the page.

Using an H.350 directory with other authentication mechanisms

Local database authentication in combination with H.350 directory authentication

You can configure the VCS to use both the local database and an H.350 directory.

If an H.350 directory is configured, the VCS will always attempt to verify any Digest credentials presented to it by first checking against the local database before checking against the H.350 directory.

H.350 directory service authentication in combination with Active Directory (direct) authentication

If Active Directory (direct) authentication has been configured and **NTLM protocol challenges** is set to *Auto*, then NTLM authentication challenges are offered to those devices that support NTLM. Devices that do not support NTLM will continue to receive a standard Digest challenge.

Using Active Directory database (direct)

Active Directory database (direct) authentication uses NTLM protocol challenges and authenticates credentials via direct access to an Active Directory server using a Kerberos connection.

It can be enabled at the same time as local database and H.350 directory service authentication. This is because NTLM authentication is only supported by certain endpoints. Therefore, for example, you could use the Active Directory (direct) server method for Jabber Video, and the local database or H.350 directory service authentication for the other devices that do not support NTLM.

If Active Directory (direct) authentication has been configured and **NTLM protocol challenges** is set to *Auto*, then NTLM authentication challenges are offered to those devices that support NTLM. Devices that do not support NTLM will continue to receive a standard Digest challenge.

Note that the VCS embeds NTLMv2 authentication protocol messages within standard SIP messages when communicating with endpoint devices, and uses a secure RPC channel when communicating with the AD Domain Controller. Users' Windows domain credentials and the AD domain administrator credentials are not stored on the VCS.

Configuration prerequisites

Active Directory

- A username and password of an AD user account with either “account operator” or “administrator” access rights must be available for the VCS to use for joining and leaving the domain.
- Entries must exist in the Active Directory server for all devices that are to be authenticated through this method. Each entry must have an associated password.
- The device entries (in all domains) must be accessible by the user account that is used by VCS to join the domain. If the VCS is in a domain that is part of a forest, and there is trust between domains in the forest, the VCS can authenticate device entries from different domains providing the user account has appropriate rights to authenticate devices against the other domains.

Kerberos Key Distribution Center

The KDC (Kerberos Key Distribution Center) server must be synchronized to a time server.

DNS server

If a DNS name or DNS SRV name is used to identify the AD servers, a DNS server must be configured with the relevant details. (Note that the VCS must be configured to use a DNS server even if you are not using DNS / DNS SRV to specify the AD servers.)

VCS

- The VCS must be configured to use a DNS server (**System > DNS**).
  - The VCS’s **System host name** (**System > DNS**) must be 15 or fewer characters long. (Microsoft NetBIOS names are capped at 15 characters.)
  - When part of a cluster, ensure that each VCS peer has a unique **System host name**.
- Ensure that an NTP server (**System > Time**) has been configured and is active.
- If the connection is going to use TLS encryption, a valid CA certificate, private key and server certificate must be uploaded to the VCS.
- The VCS must be configured to challenge for authentication on the relevant zones and subzones:

- The Default Zone (**Configuration > Zones > Zones**, then select Default Zone) must be configured with an **Authentication policy** of *Check credentials*. This ensures that provisioning requests (and any call requests from non-registered devices) are challenged.
- The Default Subzone (**Configuration > Local Zone > Default Subzone**) – or the relevant subzones - must be configured with an **Authentication policy** of *Check credentials*. This ensures that registration, presence, phone book and call requests from registered devices are challenged.

Setting up your authentication policy to check credentials will affect any device that sends provisioning, registration, presence, phone book and call requests to the VCS.

Endpoint

The PC on which Jabber Video runs must use settings which match the settings of the AD server.

Configuring the connection to Active Directory Service (ADS)

The **Active Directory Service** page (**Configuration > Authentication > Devices > Active Directory Service**) is used to configure a connection to an Active Directory Service for device authentication of Jabber Video endpoints (version 4.2 or later).

Configuring the Active Directory Service settings

To configure Active Directory (direct) and join the AD domain:

1. Go to **Configuration > Authentication > Devices > Active Directory Service**.
2. Configure the fields as follows:

Field	Description	Usage tips
Connect to Active Directory Service	Enables or disables the connection between the VCS and the Active Directory Service. When the connection is enabled, the VCS includes NTLM protocol challenges when authenticating endpoints, according to the **NTLM protocol challenges** setting.	Turning **Connect to Active Directory Service** to *Off* does not cause the VCS to leave the AD domain.
NTLM protocol challenges	Controls whether or not the VCS sends NTLM protocol challenges (in addition to Digest challenges) when authenticating devices over SIP. *Auto*: the VCS decides, based on the device type, whether to send NTLM challenges. *Off*: NTLM challenges are never sent. *On*: NTLM challenges are always sent. The default is *Auto*.	Normally, this should be set to *Auto*. If you are migrating from an existing authentication mechanism to ADS then select *Off* while the connection to the AD server is being configured; select *Auto* later, when you have an active connection and are ready to switch over to this authentication mechanism. Never use *On*, as this will send NTLM challenges to devices that may not support NTLM (and therefore they may crash or otherwise misbehave). The VCS must be connected to an Active Directory Service to send NTLM challenges.

Field	Description	Usage tips
AD domain	This must be the fully qualified domain name (FQDN) of the AD domain that the VCS will join. It must be entered in upper case, such as, EXAMPLE.COM.	Typically the domain is the same as the DNS name of the Kerberos server. Upper case entry is enforced due to case sensitivity issues with Active Directory.
Short domain name	The short domain name used by the VCS when it joins the AD domain.	It is also known as the NetBIOS domain name.
NetBIOS machine name (override)	By default the system uses the **System host name** as the NetBIOS machine name when joining the AD domain. If required, you can enter a different name here to override the default name.	An override must be specified if the **System host name** exceeds 15 characters.
Secure channel mode	Indicates if data transmitted from the VCS to an AD Domain Controller is sent over a secure channel. *Auto*: automatically adapts to the domain controller's settings. *Enabled*: always attempts to use a secure channel. *Disabled*: does not use a secure channel. The default is *Auto*.	You are recommended to use *Auto*.
Encryption	Sets the encryption to use for the LDAP connection to the Active Directory Service. *Off*: no encryption is used. *TLS*: TLS encryption is used. The default is *TLS*.	If encryption is set to TLS, a valid CA certificate, private key and server certificate must be uploaded to the VCS. Click **Upload a CA certificate file for TLS** (in the **Related tasks** section) to go to the Managing the trusted CA certificate list [p.309] page.
Clockskew	The maximum allowed clockskew (in seconds) between the VCS and the KDC before the Kerberos message is assumed to be invalid. The default is 300 seconds.	It should be kept in step with the clock skew setting on the KDC. Ensure that VCS and KDC are synchronized to time servers.
Use DNS SRV lookup to obtain Domain Controller addresses	*Yes* is the recommended setting. This means that VCS will use a DNS SRV lookup of the **AD domain** to obtain the address details of the AD domain controllers. If the lookup cannot provide the addresses then set this field to *No* and enter the IP address of the primary Domain Controller into the **Address 1** field that will be displayed.	

Field	Description	Usage tips
Use DNS SRV lookup to obtain Kerberos Key Distribution Center addresses	*Yes* is the recommended setting. This means that VCS will use a DNS SRV lookup of the **AD domain** to obtain the address details of the Kerberos Key Distribution Center servers. If the lookup cannot provide the addresses then set this field to *No* and enter the IP address of the primary Key Distribution Center servers into the **Address 1** field that will be displayed. Typically, **Port 1** can be left as its default value of 88.	Typically, the KDC addresses are the same as the Domain Controller addresses.
Username and **Password**	The AD domain administrator username and password. The password is case sensitive.	The domain administrator's credentials are required only when you attempt to join a domain. The VCS only needs to join the domain once, after which the connection can be enabled or disabled as required.

3. Click **Save** to store the configuration and join the AD domain.
   The VCS should join the AD domain. If you receive an error message, check the following:
   - the configuration settings on this page, including the username and password
   - the VCS's CA certificate, private key and server certificate
   - the **Status** area at the bottom of the Active Directory Service page for more information about the status of the connection to the AD domain

Note that:

- The domain administrator username and password are not stored in VCS; they are only required to join an AD domain (or to leave a domain).
- The VCS only needs to join the AD domain once, even if the connection to the Active Directory Service is disabled and turned back on again. The only time a join is needed again is if the VCS leaves the domain or needs to join a different domain.

Adding non-primary Domain Controllers and Kerberos Key Distribution Center servers (optional)

This procedure is only required if you are not using DNS SRV lookups of the **AD domain** to obtain the address details of the Domain Controller servers and the Kerberos Key Distribution Center servers.

1. Go to **Configuration > Authentication > Devices > Active Directory Service**.
2. Enter up to 4 further Domain Controller server addresses (up to 5 in total).
3. Enter up to 4 further Kerberos Key Distribution Center server addresses and port numbers (up to 5 in total).
4. Click **Save**.
5. If the VCS is part of a cluster, check that the configuration entered on the master peer has been replicated to each other peer.

Clustered VCS systems

In a clustered system, each VCS must join the AD domain separately. To do this:

On the master peer:

1. Follow the instructions as above to configure Active Directory (direct) and join the AD domain.
2. Ensure that the master peer has successfully joined the AD domain before continuing.

On each other peer in turn:

1. Go to **Configuration > Authentication > Devices > Active Directory Service**.
2. Check that the configuration entered on the master peer has been replicated to the current peer.
3. Enter the AD domain administrator **Username** and **Password**.
   (These credentials are not stored by the VCS and so have to be entered each time.)
4. Click **Save**.
   The VCS should join the AD domain. If you receive an error message, check the following:
   - the configuration settings on this page, including the username and password
   - the VCS's CA certificate, private key and server certificate (CA certificate information is not replicated across cluster peers)

Enabling NTLM authentication challenges

When Active Directory details have been configured and the VCS has been joined into the AD domain, VCS can now be configured to challenge Jabber Video (4.2 or later) with NTLM authentication challenges.

1. Go to **Configuration > Authentication > Devices > Active Directory Service**.
2. Ensure that **NTLM protocol challenges** is set to *Auto*.
   Never use *On*, as this will send NTLM challenges to devices that may not support NTLM (and therefore they may crash or otherwise misbehave).
3. Click **Save** if required.
4. If the VCS is part of a cluster, check that any configuration changes entered on the master peer have been replicated to each other peer.

Configuring Jabber Video and testing Active Directory database (direct) authentication

We recommend that you use a Jabber Video configuration that already authenticates successfully using either provisioning or VCS authentication. This means that Jabber Video's Advanced settings (**Internal Server**, **External Server** and **SIP Domain** entries) are correctly configured.

1. Sign in to Jabber Video:
2. In the **Username** field, configure **`<AD Short Domain Name>\username`**
   (this field is not case sensitive).
3. In the **Password** field, enter the password as configured in the Active Directory database for the chosen user.
4. Click **Sign in**.

A successful registration confirms that authentication of provisioning and registration of Jabber Video to VCS now works using Active Directory database (direct) authentication.

Ports

See Device authentication port reference [p.426] for a list of ports used when communicating with the AD system.

SPNEGO

SPNEGO (Simple and Protected GSSAPI Negotiation Mechanism) is a mechanism used by client applications when they seek to authenticate with a remote server. It allows the client and server to identify which authentication protocols they both support and decide which protocol to use.

By default the VCS uses SPNEGO when communicating with an AD Domain Controller. It can only be enabled or disabled through the CLI by using the command **`xConfiguration Authentication ADS SPNEGO`**.

Authenticating with external systems

The **Outbound connection credentials** page (**Configuration > Authentication > Outbound connection credentials**) is used to configure a username and password that the VCS will use whenever it is required to authenticate with external systems.

For example, when the VCS is forwarding an invite from an endpoint to another VCS, that other system may have authentication enabled and will therefore require your local VCS to provide it with a username and password.

Note that these settings are not used by traversal client zones. Traversal clients, which must always authenticate with traversal servers before they can connect, configure their connection credentials per traversal client zone.

Zones and neighbors

This section describes how to configure zones and neighbors on the VCS (**Configuration > Zones**).

About your video communications network 156
Structuring your dial plan 157
About zones 159
Configuring media encryption policy 160
Configuring ICE messaging support 161
About the Local Zone and subzones 162
The Default Zone 163
Configuring Default Zone access rules 164
Configuring zones 165

About your video communications network

The most basic implementation of a video communications network is a single VCS connected to the internet with one or more endpoints registered to it. However, depending on the size and complexity of your enterprise the VCS may be part of a network of endpoints, other VCSs and other network infrastructure devices, with one or more firewalls between it and the internet. In such situations you may want to apply restrictions to the amount of bandwidth used by and between different parts of your network.

This section provides an overview of the different parts of the video communications network and the ways in which they can be connected. This information should allow you to configure your VCS to best suit your own infrastructure.

Example network diagram

The diagram below shows the different components of a VCS (i.e. subzones and zones) and how they interrelate. Using a VCS Control as the example Local Zone, it shows that it is made up of a number of subzones which are all connected by links. The Local Zone is also connected to external VCSs and to the internet via different types of zones.

All these components are described in more detail in the sections that follow.

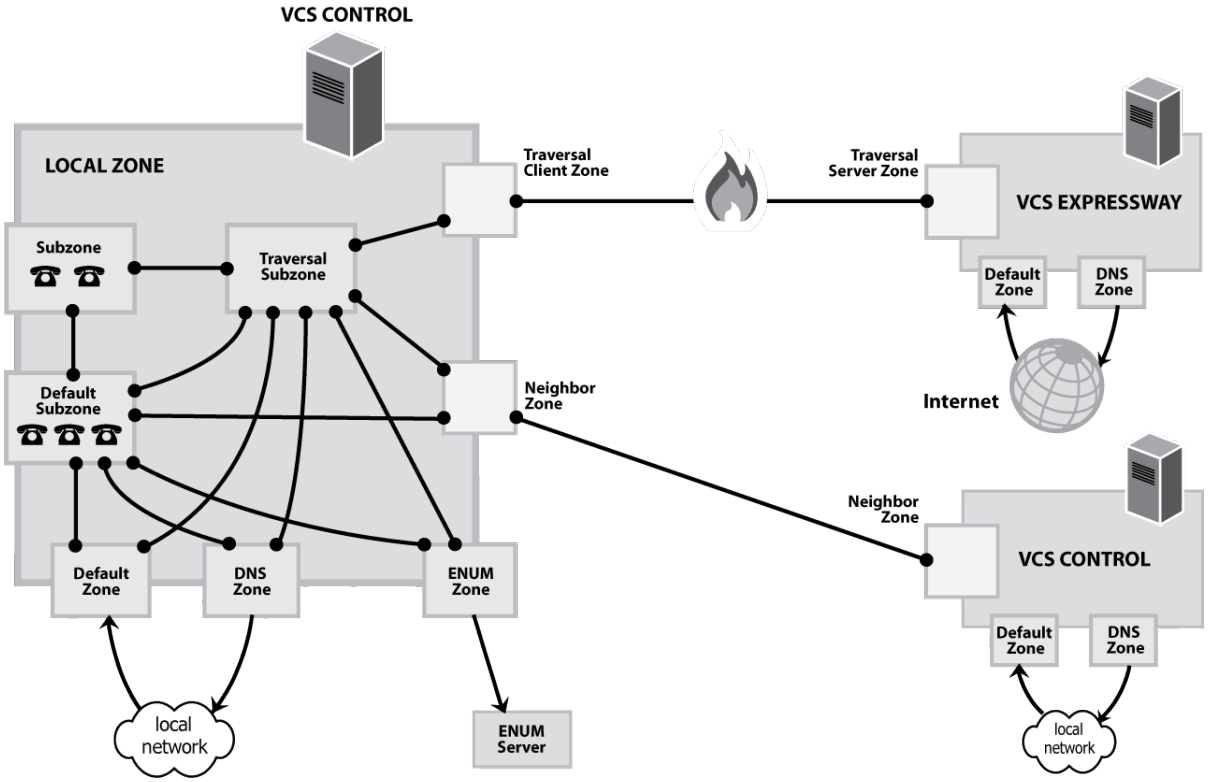

Structuring your dial plan

As you start deploying more than one VCS, it is useful to neighbor the systems together so that they can query each other about their registered endpoints. Before you start, you should consider how you will structure your dial plan. This will determine the aliases assigned to the endpoints, and the way in which the VCSs are neighbored together. The solution you choose will depend on the complexity of your system. Some possible options are described in the following sections.

Flat dial plan

The simplest approach is to assign each endpoint a unique alias and divide the endpoint registrations between the VCSs. Each VCS is then configured with all the other VCS as neighbor zones. When one VCS receives a call for an endpoint which is not registered with it, it will send out a Location Request to all the other neighbor VCSs.

While conceptually simple, this sort of flat dial plan does not scale very well. Adding or moving a VCS requires changing the configuration of every VCS, and one call attempt can result in a large number of location requests. This option is therefore most suitable for a deployment with just one or two VCSs plus its peers.

Structured dial plan

An alternative deployment would use a structured dial plan where endpoints are assigned an alias based on the system they are registering with.

If you are using E.164 aliases, each VCS would be assigned an area code. When the VCSs are neighbored together, each neighbor zone would have an associated search rule configured with its corresponding area code as a prefix (a **Mode** of *Alias pattern match* and a **Pattern type** of *Prefix*). That neighbor would then only be queried for calls to numbers which begin with its prefix.

In a URI based dial plan, similar behavior may be obtained by configuring search rules for each neighbor with a suffix to match the desired domain name.

It may be desirable to have endpoints register with just the subscriber number — the last part of the E.164 number. In that case, the search rule could be configured to strip prefixes before sending the query to that zone.

A structured dial plan minimizes the number of queries issued when a call is attempted. However, it still requires a fully connected mesh of all VCSs in your deployment. A hierarchical dial plan can simplify this.

Hierarchical dial plan

In this type of structure one VCS is nominated as the central directory VCS for the deployment, and all other VCSs are neighbored with it alone.

The directory VCS is configured with:

- each VCS as a neighbor zone
- search rules for each zone that have a **Mode** of *Alias pattern match* and the target VCS's prefix (as with the structured dial plan) as the **Pattern string**

Each VCS is configured with:

- the directory VCS as a neighbor zone
- a search rule with a **Mode** of *Any alias* and a **Target** of the directory VCS

There is no need to neighbor every VCS with each other. Adding a new VCS now only requires changing configuration on the new VCS and the directory VCS. However, note that it may be necessary to neighbor your VCSs to each other if you are using device authentication — see below for more information.

Also, failure of the directory VCS in this situation could cause significant disruption to communications. Consideration should be given to the use of clustering for increased resilience.

H.323 calls and optimal call routing

For H.323 calls, if *Optimal* call routing is enabled you must ensure that all search rules are configured with a **Source** of *Any*. If the **Source** is configured to *All zones*, H.323 calls will fail to connect. This is because the H.323 SETUP message, having followed the optimized route established by the original LRQ or ARQ, will appear to the target VCS as coming from an unknown zone. SIP calls, however, are successfully routed if the search rule **Source** is *All zones* (because in SIP the search and call setup is combined into one message).

Hierarchical dial plan (directory VCS) deployments and device authentication

See Hierarchical dial plans and authentication policy [p.140] for important information about how to configure your authentication policy within a hierarchical dial plan.

About zones

A zone is a collection of endpoints, either all registered to a single system or located in a certain way such as via an ENUM or DNS lookup. Zones are used to:

- control through links whether calls can be made between your local subzones and these other zones
- manage the bandwidth of calls between your local subzones and endpoints in other zones
- search for aliases that are not registered locally
- control the services available to endpoints within that zone by setting up its authentication policy
- control the media encryption and ICE capabilities for SIP calls to and from a zone

You can configure up to 1000 zones. Each zone is configured as one of the following zone types:

- *Neighbor*: a connection to a neighbor system of the local VCS.
- *Traversal client*: the local VCS is a traversal client of the system being connected to, and there is a firewall between the two.
- *Traversal server*: the local VCS is a traversal server for the system being connected to, and there is a firewall between the two.
- *ENUM*: the zone contains endpoints discoverable by ENUM lookup.
- *DNS*: the zone contains endpoints discoverable by DNS lookup.
- *Unified Communications traversal*: a traversal client or traversal server zone used for Unified Communications features such as mobile and remote access or Jabber Guest. Note that this zone type applies to the web interface only; the underlying CLI configuration uses *traversal client* and *traversal server* zone types.

The VCS also has a pre-configured Default Zone.

- See the Zone configuration section for information about the configuration options available for all zone types.
- See the Configuring search and zone transform rules section for information about including zones as targets for search rules.

Automatically generated neighbor zones

The VCS may automatically generate some non-configurable neighbor zones:

- A VCS Control automatically generates neighbor zones between itself and each discovered Unified CM node when the system is configured for mobile and remote access.
- A VCS automatically generates a neighbor zone named "To Microsoft Lync server via B2BUA" when the Lync B2BUA is enabled.

Configuring media encryption policy

The media encryption policy settings allow you to selectively add or remove media encryption capabilities for SIP calls flowing through the VCS. This allows you to configure your system so that, for example, all traffic arriving or leaving a VCS Expressway from the public internet is encrypted, but is unencrypted when in your private network.

- The policy is configured on a per zone/subzone basis and applies only to that leg of the call in/out of that zone/subzone.
- Encryption is applied to the SIP leg of the call, even if other legs are H.323.

Media encryption policy is configured through the **Media encryption mode** setting on each zone and subzone, however the resulting encryption status of the call is also dependent on the encryption policy settings of the target system (such as an endpoint or another VCS).

The encryption mode options are:

- *Force encrypted*: all media to and from the zone/subzone must be encrypted. If the target system/endpoint is configured to not use encryption, then the call will be dropped.
- *Force unencrypted*: all media must be unencrypted. If the target system/endpoint is configured to use encryption, then the call may be dropped; if it is configured to use *Best effort* then the call will fall back to unencrypted media.
- *Best effort*: use encryption if available, otherwise fall back to unencrypted media.
- *Auto*: no specific media encryption policy is applied by the VCS. Media encryption is purely dependent on the target system/endpoint requests. This is the default behavior and is equivalent to how the VCS operated before this feature was introduced.

Encryption policy (any encryption setting other than *Auto*) is applied to a call by routing it through a back-to-back user agent (B2BUA) hosted on the VCS.

When configuring your system to use media encryption you should note that:

- Any zone with an encryption mode of *Force encrypted* or *Force unencrypted* must be configured as a SIP-only zone (H.323 must be disabled on that zone).
- TLS transport must be enabled if an encryption mode of *Force encrypted* or *Best effort* is required.
- The call component routed through the B2BUA can be identified in the call history details as having a component type of *B2BUA*.
- As the B2BUA must take the media, each call is classified as a traversal call and thus consumes a traversal call license.
- There is a limit per VCS of 100 simultaneous calls (500 calls on Large systems) that can have a media encryption policy applied.
- The B2BUA can also be invoked when ICE messaging support is enabled.

Configuring the B2BUA for media encryption

The B2BUA used for encryption (and ICE support) is a different instance to the B2BUA used for Microsoft Lync integration. Whereas the Lync B2BUA has to be manually configured and enabled, the B2BUA used for encryption is automatically enabled whenever an encryption policy is applied.

Configuring ICE messaging support

The **ICE support** option is a per-zone and per-subzone configuration setting that controls how the VCS supports ICE messages to and from SIP devices within that zone or subzone.

The behavior depends upon the configuration of the **ICE support** setting on the incoming (ingress) and outgoing (egress) zone or subzone. When there is a mismatch of settings i.e. *On* on one side and *Off* on the other side, the VCS invokes its back-to-back user agent (B2BUA) to perform ICE negotiation with the relevant host.

All zones and subzones have **ICE support** set to *Off* by default.

When the B2BUA performs ICE negotiation with a host, it can offer TURN relay candidate addresses. To do this, the B2BUA must be configured with the addresses of the TURN servers to offer (via **Applications > B2BUA > B2BUA TURN servers**).

The following matrix shows the VCS behavior for the different possible combinations of the **ICE support** setting when handling a call between, for example, zone A and zone B:

ICE support setting		**Zone A**	
		Off	**On**
Zone B	**Off**	Standard VCS proxying behavior. B2BUA is not normally invoked (however, see the note below regarding media encryption policy).	B2BUA is invoked. B2BUA includes ICE candidates in messages to hosts in Zone A.
	On	B2BUA is invoked. B2BUA includes ICE candidates in messages to hosts in Zone B.	Standard VCS proxying behavior. B2BUA is not normally invoked (however, see the note below regarding media encryption policy).

Effect of media encryption policy when combined with ICE support

The VCS also invokes the B2BUA if it has to apply a media encryption policy (any encryption setting other than *Auto*). This table shows the effect on ICE negotiation behavior depending on the ICE support and media encryption modes of the ingress and egress zones or subzones:

ICE support	Media encryption mode	B2BUA invoked	Effect on ICE negotiation
Both zones / subzones = *Off*	At least one zone / subzone is **not** *Auto*	Yes	The B2BUA will not perform any ICE negotiation with either host.
Both zones / subzones = *On*	At least one zone / subzone is **not** *Auto*	Yes	The B2BUA will perform ICE negotiation with both hosts.
Both zones / subzones = *On*	Both zones / subzones = *Auto*	No	The VCS will not offer any TURN relay candidate addresses to either of the ICE capable hosts. However, note that each host device may have already been provisioned with TURN relay candidate addresses.

Note that:

- B2BUA routed calls are identified in the call history by a component type of *B2BUA*.
- A traversal call license is consumed when a call goes via the encryption B2BUA.
- There is a limit of 100 concurrent calls (500 calls on Large systems) that can be routed via the B2BUA.

About the Local Zone and subzones

The collection of all endpoints, gateways, MCUs and Content Servers registered with the VCS makes up its **Local Zone**.

The Local Zone is divided into **subzones**. These include an automatically created **Default Subzone** and up to 1000 manually configurable subzones.

When an endpoint registers with the VCS it is allocated to an appropriate subzone based on subzone membership rules. These rules specify the range of IP addresses or alias pattern matches for each subzone. If an endpoint's IP address or alias does not match any of the membership rules, it is assigned to the Default Subzone.

The Local Zone may be independent of network topology, and may comprise multiple network segments. The VCS also has two special types of subzones:

- the Traversal Subzone, which is always present
- the Cluster Subzone, which is always present but only used when your VCS is part of a cluster

Bandwidth management

The Local Zone's subzones are used for bandwidth management. After you have set up your subzones you can apply bandwidth limits to:

- individual calls between two endpoints within the subzone
- individual calls between an endpoint within the subzone and another endpoint outside of the subzone
- the total of calls to or from endpoints within the subzone

For full details of how to create and configure subzones, and apply bandwidth limitations to subzones including the Default Subzone and Traversal Subzone, see the Bandwidth control section.

Registration, authentication and media encryption policies

In addition to bandwidth management, subzones are also used to control the VCS's registration, authentication and media encryption policies.

See Configuring subzones [p.249] for more information about how to configure these settings.

Local Zone searches

One of the functions of the VCS is to route a call received from a locally registered endpoint or external zone to its appropriate destination. Calls are routed based on the address or alias of the destination endpoint.

The VCS searches for a destination endpoint in its Local Zone and its configured external zones. You can prioritize the order in which these zones are searched, and filter the search requests sent to each zone, based on the address or alias being searched for. This allows you to reduce the potential number of search requests sent to the Local Zone and out to external zones, and speed up the search process.

For further information about how to configure search rules for the Local Zone, see the Configuring search and zone transform rules section.

The Default Zone

The Default Zone represents any incoming calls from endpoints or other devices that are unregistered or not recognized as belonging to the Local Zone or any of the existing configured zones.

The VCS comes pre-configured with the Default Zone and default links between it and both the Default Subzone and the Traversal Subzone. Note that the Default Zone cannot be deleted.

Configuring the Default Zone

By configuring the Default Zone you can control how the VCS handles calls from unrecognized systems and endpoints. To configure the Default Zone, go to **Configuration > Zones > Zones** and click on **DefaultZone**.

The configurable options are:

Field	Description	Usage tips
Authentication policy	The **Authentication policy** setting controls how the VCS challenges incoming messages to the Default Zone.	See Authentication policy configuration options [p.130] for more information.
Media encryption mode	The **Media encryption mode** setting controls the media encryption capabilities for SIP calls flowing through the Default Zone.	See Configuring media encryption policy [p.160] for more information.
ICE support	Controls whether ICE messages are supported by the devices in this zone.	See Configuring ICE messaging support [p.161] for more information.
Use Default Zone access rules	The **Use Default Zone access rules** setting controls which external systems are allowed to connect over SIP TLS to the VCS via the Default Zone.	If the access rules are enabled, then by default no systems will be allowed to connect over SIP TLS via the Default Zone; you must set up the access rules for the systems you want to grant access. In essence, it enables **TLS verify mode** on the Default Zone. Note that this setting does not affect other connections to the Default Zone (H.323 and SIP UDP/TCP).

Using links and pipes to manage access and bandwidth

You can also manage calls from unrecognized systems and endpoints by configuring the links and pipes associated with the Default Zone. For example, you can:

- delete the default links to prevent any incoming calls from unrecognized endpoints
- apply pipes to the default links to control the bandwidth consumed by incoming calls from unrecognized endpoints

Configuring Default Zone access rules

The Default Zone access rules (**Configuration > Zones > Default Zone access rules**) control which external systems are allowed to connect over SIP TLS to the VCS via the Default Zone.

Each rule specifies a pattern type and string that is compared to the identities (Subject Common Name and any Subject Alternative Names) contained within the certificate presented by the external system. You can then allow or deny access to systems whose certificates match the specified pattern. Up to 10,000 rules can be configured.

To use the rules, **Use Default Zone access rules** on the Default Zone page must be set to *Yes*. If the access rules are enabled, then by default no systems will be allowed to connect over SIP TLS to the Default Zone; you must set up the access rules for the systems you want to grant access. Note that the access rules do not affect other connections to the Default Zone (H.323 and SIP UDP/TCP).

The configurable options are:

Field	Description	Usage tips
Name	The name assigned to the rule.	
Description	An optional free-form description of the rule.	
Priority	Determines the order in which the rules are applied if the certificate names match multiple rules. The rules with the highest priority (1, then 2, then 3 and so on) are applied first. Multiple rules with the same priority are applied in configuration order.	
Pattern type	The way in which the **Pattern string** must match the Subject Common Name or any Subject Alternative Names contained within the certificate. *Exact*: the entire string must exactly match the name, character for character. *Prefix*: the string must appear at the beginning of the name. *Suffix*: the string must appear at the end of the name. *Regex*: treats the string as a regular expression.	You can test whether a pattern matches a particular name by using the Check pattern tool (**Maintenance > Tools > Check pattern**).
Pattern string	The pattern against which the name is compared.	
Action	The action to take if the certificate matches this access rule. *Allow*: allows the external system to connect via the Default Zone. *Deny*: rejects any connection requests received from the external system.	
State	Indicates if the rule is enabled or not.	Use this setting to test configuration changes, or to temporarily disable certain rules. Any disabled rules still appear in the rules list but are ignored.

Configuring zones

The **Zones** page (**Configuration > Zones > Zones**) lists all the zones that have been configured on the VCS, and lets you create, edit and delete zones.

It also displays the zone's H.323 or SIP connection status:

- *Off*: the protocol is disabled at either the zone or system level
- *Active*: the protocol is enabled for that zone and it has at least one active connection; if multiple connections are configured and some of those connections have failed, the display indicates how many of the connections are *Active*
- *On*: applies to DNS and ENUM zones only and indicates that the protocol is enabled for that zone
- *Failed*: the protocol is enabled for that zone but its connection has failed
- *Checking*: the protocol is enabled for that zone and the system is currently trying to establish a connection

To neighbor with another system (such as another VCS or gatekeeper), create a connection over a firewall to a traversal server or traversal client, or discover endpoints via an ENUM or DNS lookup, you must configure a zone on the local VCS. The available zone types are:

- *Neighbor*: connects the local VCS to a neighbor system
- *Traversal client*: connects the local VCS to a traversal server
- *Traversal server*: connects the local VCS Expressway to a traversal client
- *ENUM*: enables ENUM dialing via the local VCS
- *DNS*: enables the local VCS to locate endpoints and other systems by using DNS lookups

The zone type indicates the nature of the connection and determines which configuration options are available. For traversal server zones, traversal client zones and neighbor zones this includes providing information about the neighbor system such as its IP address and ports.

The VCS also has a pre-configured Default Zone. The Default Zone represents any incoming calls from endpoints or other devices that are unregistered or not recognized as belonging to the Local Zone or any of the existing configured zones.

Note that connections between the VCS and neighbor systems must be configured to use the same SIP transport type, that is they must both be configured to use TLS or both be configured to use TCP. In software versions prior to X5.1 a connection could be established if one system was configured to use TLS and the other used TCP. Any connection failures due to transport type mismatches are recorded in the Event Log.

After creating a zone you would normally make it a target of at least one of your zone policy search rules (**Configuration > Dial plan > Search rules**) otherwise search requests will not be sent to that zone.

Configuring neighbor zones

A neighbor zone could be a collection of endpoints registered to another system (such as another VCS), or it could be a SIP device (for example Cisco Unified Communications Manager). The other system or SIP device is referred to as a neighbor. Neighbors can be part of your own enterprise network, part of a separate network, or even standalone systems.

You create a neighbor relationship with the other system by adding it as a neighbor zone on your local VCS. After you have added it, you can:

- query the neighbor about its endpoints
- apply transforms to any requests before they are sent to the neighbor
- control the bandwidth used for calls between your local VCS and the neighbor zone

Note that:

- neighbor zone relationship definitions are one-way; adding a system as a neighbor to your VCS does not automatically make your VCS a neighbor of that system
- inbound calls from any configured neighbor are identified as coming from that neighbor
- systems that are configured as cluster peers (formerly known as Alternates) must not be configured as neighbors to each other

The configurable options for a neighbor zone are:

Field	Description	Usage tips
Configuration section:		
Name	The name acts as a unique identifier, allowing you to distinguish between zones of the same type.	
Type	The nature of the specified zone, in relation to the local VCS. Select *Neighbor*.	After a zone has been created, the **Type** cannot be changed.
Hop count	The hop count is the number of times a request will be forwarded to a neighbor gatekeeper or proxy (see the Hop counts section for more information). This field specifies the hop count to use when sending a search request to this particular zone.	If the search request was received from another zone and already has a hop count assigned, the lower of the two values is used.
H.323 section:		
Mode	Determines whether H.323 calls are allowed to and from the neighbor system.	
Port	The port on the neighbor system used for H.323 searches initiated from the local VCS.	This must be the same port number as that configured on the neighbor system as its H.323 UDP port. If the neighbor is another VCS, this is the port found under **Configuration > Protocols > H.323** in the **Registration UDP Port** field.
SIP section:		
Mode	Determines whether SIP calls are allowed to and from the neighbor system.	
Port	The port on the neighbor system used for outgoing SIP messages initiated from the local VCS.	This must be the same port number as that configured on the neighbor system as its SIP TCP, SIP TLS or SIP UDP listening port (depending on which SIP **Transport** mode is in use).
Transport	Determines which transport type is used for SIP calls to and from the neighbor system. The default is *TLS*.	

Field	Description	Usage tips
TLS verify mode	Controls whether the VCS performs X.509 certificate checking against the neighbor system when communicating over TLS.	If the neighbor system is another VCS, both systems can verify each other's certificate (known as mutual authentication). See TLS certificate verification of neighbor systems [p.179] for more information.
Accept proxied registrations	Controls whether proxied SIP registrations routed through this zone are accepted.	This setting only applies to registration requests for a domain for which the VCS is acting as a Registrar. For requests for other domains the **SIP registration proxy mode** setting applies. See Proxying registration requests for more information.
Media encryption mode	Controls the media encryption policy applied by the VCS for SIP calls (including interworked calls) to and from this zone.	See Configuring media encryption policy [p.160] for more information.
ICE support	Controls whether ICE messages are supported by the devices in this zone.	See Configuring ICE messaging support [p.161] for more information.
Authentication section:		
Authentication policy	Controls how the VCS authenticates incoming messages from this zone and whether they are subsequently treated as authenticated, unauthenticated, or are rejected.	The behavior varies for H.323 messages, SIP messages that originate from a local domain and SIP messages that originate from non-local domains. See Authentication policy configuration options [p.130] for more information.
SIP authentication trust mode	Controls whether authenticated SIP messages (ones containing a P-Asserted-Identity header) from this zone are trusted without further challenge.	See SIP authentication trust [p.133] for more information.
Location section:		
Location Peer 1 to Peer 6 address	The IP address or FQDN of the neighbor system. Enter the addresses of additional peers if: ■ the neighbor is a VCS cluster, in which case you must specify all of the peers in the cluster ■ the neighbor is a resilient non-VCS system, in which case you must enter the addresses of all of the resilient elements in that system	Calls to a VCS cluster are routed to whichever peer in that neighboring cluster has the lowest resource usage. See Neighboring the local VCS to another VCS cluster [p.193] for more information. For connections to non-VCS systems, the VCS uses a round-robin selection process to decide which peer to contact if no resource usage information is available.
Advanced section:		

Field	Description	Usage tips
Zone profile	Determines how the zone's advanced settings are configured. *Default*: uses the factory default profile. *Custom*: allows you to configure each setting individually. Alternatively. choose one of the preconfigured profiles to automatically use the appropriate settings required for connections to that type of system. The options include: ■ *Cisco Unified Communications Manager* ■ *Cisco Unified Communications Manager (8.6.1 or later)* ■ *Nortel Communication Server 1000* ■ *Infrastructure device* (typically used for non-gatekeeper devices such as an MCU)	See Zone configuration: advanced settings [p.175] for details on the advanced settings. Only use the *Custom* profile to configure the individual advanced settings on the advice of Cisco customer support. See *Cisco Unified Communications Manager with VCS Deployment Guide* for more information about the *Cisco Unified Communications Manager* profiles.

Configuring traversal client zones

To traverse a firewall, the VCS must be connected with a traversal server (typically, a VCS Expressway).

In this situation your local VCS is a traversal client, so you create a connection with the traversal server by creating a traversal client zone on your local VCS. You then configure the client zone with details of the corresponding zone on the traversal server. (The traversal server must also be configured with details of the VCS client zone.)

After you have neighbored with the traversal server you can:

- use the neighbor as a traversal server
- query the traversal server about its endpoints
- apply transforms to any queries before they are sent to the traversal server
- control the bandwidth used for calls between your local VCS and the traversal server

For full details on how traversal client zones and traversal server zones work together to achieve firewall traversal, see About firewall traversal [p.49].

An NTP server must be configured for traversal zones to work.

The configurable options for a traversal client zone are:

Field	Description	Usage tips
Configuration section:		
Name	The name acts as a unique identifier, allowing you to distinguish between zones of the same type.	
Type	The nature of the specified zone, in relation to the local VCS. Select *Traversal client*.	After a zone has been created, the **Type** cannot be changed.

Field	Description	Usage tips
Hop count	The hop count is the number of times a request will be forwarded to a neighbor gatekeeper or proxy (see the Hop counts section for more information). This field specifies the hop count to use when sending a search request to this particular zone.	If the search request was received from another zone and already has a hop count assigned, the lower of the two values is used.
Connection credentials section:		
Username and **Password**	Traversal clients must always authenticate with traversal servers by providing their authentication credentials. Each traversal client zone must specify a **Username** and **Password** to be used for authentication with the traversal server.	Multiple traversal client zones can be configured, each with distinct credentials, to connect to one or more service providers.
H.323 section:		
Mode	Determines whether H.323 calls are allowed to and from the traversal server.	
Protocol	Determines which of the two firewall traversal protocols (*Assent* or *H.460.18*) to use for calls to the traversal server.	See Configuring ports for firewall traversal [p.55] for more information.
Port	The port on the traversal server to use for H.323 calls to and from the local VCS.	For firewall traversal to work via H.323, the traversal server must have a traversal server zone configured on it to represent this VCS, using this same port number.
SIP section:		
Mode	Determines whether SIP calls are allowed to and from the traversal server.	
Port	The port on the traversal server to use for SIP calls to and from the VCS. This must be different from the listening ports used for incoming TCP, TLS and UDP SIP calls (typically 5060 and 5061).	For firewall traversal to work via SIP, the traversal server must have a traversal server zone configured on it to represent this VCS, using this same transport type and port number.
Unified Communications services	Controls whether this traversal zone provides Unified Communications services, such as mobile and remote access.	If enabled, this zone must also be configured to use TLS with **TLS verify mode** enabled. This setting only applies when Unified Communications mode is set to *Mobile and remote access*.
Transport	Determines which transport type is used for SIP calls to and from the traversal server. The default is *TLS*.	
TLS verify mode	Controls X.509 certificate checking and mutual authentication between this VCS and the traversal server when communicating over TLS.	See TLS certificate verification of neighbor systems [p.179] for more information.

Field	Description	Usage tips
Accept proxied registrations	Controls whether proxied SIP registrations routed through this zone are accepted.	This setting only applies to registration requests for a domain for which the VCS is acting as a Registrar. For requests for other domains the **SIP registration proxy mode** setting applies. See Proxying registration requests for more information.
Media encryption mode	Controls the media encryption policy applied by the VCS for SIP calls (including interworked calls) to and from this zone.	See Configuring media encryption policy [p.160] for more information.
ICE support	Controls whether ICE messages are supported by the devices in this zone.	See Configuring ICE messaging support [p.161] for more information.
Poison mode	Determines if SIP requests sent to systems located via this zone are "poisoned" such that if they are received by this VCS again they will be rejected.	
Authentication section:		
Authentication policy	Controls how the VCS authenticates incoming messages from this zone and whether they are subsequently treated as authenticated, unauthenticated, or are rejected. The behavior varies for H.323 messages, SIP messages that originate from a local domain and SIP messages that originate from non-local domains.	See Authentication policy configuration options [p.130] for more information.
Accept delegated credential checks	Controls whether this zone accepts delegated authentication requests.	See Configuring delegated credential checking (SIP only) [p.134] for more information.
Client settings section:		
Retry interval	The interval in seconds with which a failed attempt to establish a connection to the traversal server should be retried.	
Location section:		
Peer 1 to Peer 6 address	The IP address or FQDN of the traversal server. If the traversal server is a VCS Expressway cluster, this should include all of its peers.	See Neighboring the local VCS to another VCS cluster [p.193] for more information.

Configuring traversal server zones

A VCS Expressway can act as a traversal server, providing firewall traversal on behalf of traversal clients (a VCS Control).

To act as a traversal server, the VCS Expressway must have a special type of two-way relationship with each traversal client. To create this connection, you create a traversal server zone on your local VCS Expressway and configure it with the details of the corresponding zone on the traversal client. (The client must also be configured with details of the VCS Expressway.)

After you have neighbored with the traversal client you can:

- provide firewall traversal services to the traversal client
- query the traversal client about its endpoints
- apply transforms to any queries before they are sent to the traversal client
- control the bandwidth used for calls between your local VCS and the traversal client

Note: traversal client-server zone relationships must be two-way. For firewall traversal to work, the traversal server and the traversal client must each be configured with the other's details (see Configuring a traversal client and server [p.54] for more information). The client and server will then be able to communicate over the firewall and query each other. For full details on how traversal client zones and traversal server zones work together to achieve firewall traversal, see About firewall traversal [p.49].

An NTP server must be configured for traversal zones to work.

The configurable options for a traversal server zone are:

Field	Description	Usage tips
Configuration section:		
Name	The name acts as a unique identifier, allowing you to distinguish between zones of the same type.	
Type	The nature of the specified zone, in relation to the local VCS. Select *Traversal server*.	After a zone has been created, the **Type** cannot be changed.
Hop count	The hop count is the number of times a request will be forwarded to a neighbor gatekeeper or proxy (see the Hop counts section for more information). This field specifies the hop count to use when sending a search request to this particular zone.	If the search request was received from another zone and already has a hop count assigned, the lower of the two values is used.
Connection credentials section:		
Username	Traversal clients must always authenticate with traversal servers by providing their authentication credentials. The authentication username is the name that the traversal client must provide to the VCS Expressway. (It is configured as the connection credentials **Username** in its traversal client zone.)	There must also be an entry in the VCS Expressway's local authentication database for the client's authentication username and password. To check the list of entries and add it if necessary, go to the **Local authentication database** page. Either: ■ click on the **Add/Edit local authentication database** link ■ go to **Configuration > Authentication > Local database**
H.323 section:		
Mode	Determines whether H.323 calls are allowed to and from the traversal client.	
Protocol	Determines the protocol (*Assent* or *H.460.18*) to use to traverse the firewall/NAT.	See Configuring ports for firewall traversal [p.55] for more information.
Port	The port on the local VCS Expressway to use for H.323 calls to and from the traversal client.	

Field	Description	Usage tips
H.460.19 demultiplexing mode	Determines whether or not the same two ports are used for media by two or more calls. *On*: all calls from the traversal client use the same two ports for media. *Off*: each call from the traversal client uses a separate pair of ports for media.	
SIP section:		
Mode	Determines whether SIP calls are allowed to and from the traversal client.	
Port	The port on the local VCS Expressway to use for SIP calls to and from the traversal client.	This must be different from the listening ports used for incoming TCP, TLS and UDP SIP calls (typically 5060 and 5061).
Transport	Determines which transport type is used for SIP calls to and from the traversal client. The default is *TLS*.	
Unified Communications services	Controls whether this traversal zone provides Unified Communications services, such as mobile and remote access.	If enabled, this zone must also be configured to use TLS with **TLS verify mode** enabled. This setting only applies when Unified Communications mode is set to *Mobile and remote access*.
TLS verify mode and **subject name**	Controls X.509 certificate checking and mutual authentication between this VCS and the traversal client. If **TLS verify mode** is enabled, a **TLS verify subject name** must be specified. This is the certificate holder's name to look for in the traversal client's X.509 certificate.	If the traversal client is clustered, the **TLS verify subject name** must be the FQDN of the cluster. See TLS certificate verification of neighbor systems [p.179] for more information.
Accept proxied registrations	Controls whether proxied SIP registrations routed through this zone are accepted.	This setting only applies to registration requests for a domain for which the VCS is acting as a Registrar. For requests for other domains the **SIP Registration Proxy Mode** setting applies. See Proxying registration requests for more information.
Media encryption mode	Controls the media encryption policy applied by the VCS for SIP calls (including interworked calls) to and from this zone.	See Configuring media encryption policy [p.160] for more information.
ICE support	Controls whether ICE messages are supported by the devices in this zone.	See Configuring ICE messaging support [p.161] for more information.
Poison mode	Determines if SIP requests sent to systems located via this zone are "poisoned" such that if they are received by this VCS again they will be rejected.	
Authentication section:		

Field	Description	Usage tips
Authentication policy	Controls how the VCS authenticates incoming messages from this zone and whether they are subsequently treated as authenticated, unauthenticated, or are rejected. The behavior varies for H.323 messages, SIP messages that originate from a local domain and SIP messages that originate from non-local domains.	See Authentication policy configuration options [p.130] for more information.
UDP / TCP probes section:		
UDP retry interval	The frequency (in seconds) with which the client sends a UDP probe to the VCS Expressway if a keep alive confirmation has not been received.	The default UDP and TCP probe retry intervals are suitable for most situations. However, if you experience problems with NAT bindings timing out, they may need to be changed.
UDP retry count	The number of times the client attempts to send a UDP probe to the VCS Expressway during call setup.	
UDP keep alive interval	The interval (in seconds) with which the client sends a UDP probe to the VCS Expressway after a call is established, in order to keep the firewall's NAT bindings open.	
TCP retry interval	The interval (in seconds) with which the traversal client sends a TCP probe to the VCS Expressway if a keep alive confirmation has not been received.	
TCP retry count	The number of times the client attempts to send a TCP probe to the VCS Expressway during call setup.	
TCP keep alive interval	The interval (in seconds) with which the traversal client sends a TCP probe to the VCS Expressway when a call is in place, in order to maintain the firewall's NAT bindings.	

Configuring ENUM zones

ENUM zones allow you to locate endpoints via an ENUM lookup. You can create one or more search rules for ENUM zones based on the ENUM DNS suffix used and/or by pattern matching of the endpoints' aliases.

After you have configured one or more ENUM zones, you can:

- apply transforms to alias search requests directed to that group of endpoints
- control the bandwidth used for calls between your local VCS and each group of ENUM endpoints

Full details of how to use and configure ENUM zones are given in the About ENUM dialing [p.235] section.

The configurable options for an ENUM zone are:

Field	Description	Usage tips
Name	The name acts as a unique identifier, allowing you to distinguish between zones of the same type.	

Field	Description	Usage tips
Type	The nature of the specified zone, in relation to the local VCS. Select *ENUM*.	After a zone has been created, the **Type** cannot be changed.
Hop count	The hop count is the number of times a request will be forwarded to a neighbor gatekeeper or proxy (see the Hop counts section for more information). This field specifies the hop count to use when sending a search request to this particular zone.	If the search request was received from another zone and already has a hop count assigned, the lower of the two values is used.
DNS suffix	The domain to be appended to the transformed E.164 number to create an ENUM domain for which this zone is queried.	
H.323 mode	Determines whether H.323 records are looked up for this zone.	
SIP mode	Determines whether SIP records are looked up for this zone.	

Configuring DNS zones

DNS zones allow you to locate endpoints via a DNS lookup. You can create one or more search rules for DNS zones based on pattern matching of the endpoints' aliases.

After you have configured one or more DNS zones, you can:

- apply transforms to alias search requests directed to that group of endpoints
- control the bandwidth used for calls between your local VCS and each group of DNS endpoints

See About URI dialing [p.227] for more information on configuring and using DNS zones.

The configurable options for a DNS zone are:

Field	Description	Usage tips
Name	The name acts as a unique identifier, allowing you to distinguish between zones of the same type.	
Type	The nature of the specified zone, in relation to the local VCS. Select *DNS*.	After a zone has been created, the **Type** cannot be changed.
Hop count	The hop count is the number of times a request will be forwarded to a neighbor gatekeeper or proxy (see the Hop counts section for more information). This field specifies the hop count to use when sending a search request to this particular zone.	If the search request was received from another zone and already has a hop count assigned, the lower of the two values is used.
H.323 mode	Determines whether H.323 calls are allowed to systems and endpoints located using DNS lookups via this zone.	
SIP mode	Determines whether SIP calls are allowed to systems and endpoints located using DNS lookups via this zone.	

Field	Description	Usage tips
TLS verify mode and **subject name**	Controls whether the VCS performs X.509 certificate checking against the destination system server returned by the DNS lookup. If **TLS verify mode** is enabled, a **TLS verify subject name** must be specified. This is the certificate holder's name to look for in the destination system server's X.509 certificate.	This setting only applies if the DNS lookup specifies TLS as the required protocol. If TLS is not required then the setting is ignored. See TLS certificate verification of neighbor systems [p.179] for more information.
TLS verify subject name	The certificate holder's name to look for in the destination system server's X.509 certificate (must be in either the Subject Common Name or the Subject Alternative Name attributes).	
Fallback transport protocol	The transport type to use for SIP calls from the DNS zone, when DNS NAPTR records and SIP URI parameters do not provide the preferred transport information. The default is *UDP* (if enabled).	
Media encryption mode	Controls the media encryption policy applied by the VCS for SIP calls (including interworked calls) to the internet.	See Configuring media encryption policy [p.160] for more information.
ICE support	Controls whether ICE messages are supported by the devices in this zone.	See Configuring ICE messaging support [p.161] for more information.
Zone profile	Determines how the zone's advanced settings are configured. *Default*: uses the factory default profile. *Custom*: allows you to configure each setting individually.	See Zone configuration: advanced settings [p.175] for details on the advanced settings. Only use the *Custom* profile to configure the individual advanced settings on the advice of Cisco customer support.

Zone configuration: advanced settings

The table below describes the advanced zone configuration options for the *Custom* zone profile. Some of these settings only apply to specific zone types.

Setting	Description	Default	Zone types
Monitor peer status	Specifies whether the VCS monitors the status of the zone's peers. If enabled, H.323 LRQs and/or SIP OPTIONS are periodically sent to the peers. If a peer fails to respond, that peer is marked as inactive. If all peers fail to respond the zone is marked as inactive.	Yes	Neighbor
Call signaling routed mode	Specifies how the VCS handles the signaling for calls to and from this neighbor. *Auto*: signaling is taken as determined by the **Call signaling optimization** (**Configuration > Call routing**) configuration. *Always*: signaling is always taken for calls to or from this neighbor, regardless of the **Call signaling optimization** configuration. Calls via traversal zones or the B2BUA always take the signaling.	Auto	Neighbor

Setting	Description	Default	Zone types
Automatically respond to H.323 searches	Determines what happens when the VCS receives an H.323 search, destined for this zone. *Off*: an LRQ message is sent to the zone. *On*: searches are responded to automatically, without being forwarded to the zone.	Off	Neighbor
H.323 call signaling port	Specifies the port on the neighbor to be used for H.323 calls to and from this VCS. This setting only applies if **Automatically respond to H.323 searches** is *On* (which includes when the *Infrastructure device* profile is selected), as the search process normally identifies which call signaling port to use.	1720	Neighbor
Automatically respond to SIP searches	Determines what happens when the VCS receives a SIP search that originated as an H.323 search. *Off*: a SIP OPTIONS or SIP INFO message is sent. *On*: searches are responded to automatically, without being forwarded. This should normally be left as the default *Off*. However, some systems do not accept SIP OPTIONS messages, so for these zones it must be set to *On*. If you change this to *On*, you must also configure pattern matches to ensure that only those searches that actually match endpoints in this zone are responded to. If you do not, the search will not continue to other lower-priority zones, and the call will be forwarded to this zone even if it cannot support it.	Off	Neighbor DNS
Send empty INVITE for interworked calls	Determines whether the VCS generates a SIP INVITE message with no SDP to send via this zone. INVITES with no SDP mean that the destination device is asked to initiate the codec selection, and are used when the call has been interworked locally from H.323. *On*: SIP INVITEs with no SDP are generated. *Off*: SIP INVITEs are generated and a pre-configured SDP is inserted before the INVITEs are sent. In most cases this option should normally be left as the default *On*. However, some devices do not accept invites with no SDP, so for these zones this should be set to *Off*. Note that the settings for the pre-configured SDP are configurable via the CLI using the **`xConfiguration Zones Zone [1..1000] [Neighbor/DNS] Interworking SIP`** commands. They should only be changed on the advice of Cisco customer support.	On	Neighbor DNS
SIP poison mode	*On*: SIP requests sent to systems located via this zone are "poisoned" such that if they are received by this VCS again they will be rejected. *Off*: SIP requests sent out via this zone that are received by this VCS again will not be rejected; they will be processed as normal.	Off	Neighbor Traversal client Traversal server DNS

Setting	Description	Default	Zone types
SIP encryption mode	Determines whether or not the VCS allows encrypted SIP calls on this zone. *Auto*: SIP calls are encrypted if a secure SIP transport (TLS) is used. *Microsoft*: SIP calls are encrypted using MS-SRTP. *Off*: SIP calls are never encrypted. This option should normally be left as the default *Auto*.	Auto	Neighbor
SIP REFER mode	Determines how SIP REFER requests are handled. *Forward*: SIP REFER requests are forwarded to the target. *Terminate*: SIP REFER requests are terminated by the VCS.	Forward	Neighbor
SIP SDP attribute line limit mode	Determines whether requests containing SDP sent out to this zone have the length of **`a=fmtp`** lines restricted. *On*: the length is truncated to the maximum length specified by the SIP SDP attribute line limit length setting. *Off*: the length is not truncated. The **SIP SDP attribute line limit** option should normally be left as the default of *Off*. However, some systems cannot handle attribute lines longer than 130 characters, so it must be set to *On* for connections to these systems.	Off	Neighbor DNS
SIP SDP attribute line limit length	If **SIP SDP attribute line limit mode** is set to *On*, sets the maximum line length of **`a=fmtp`** SDP lines.	130	Neighbor DNS
SIP multipart MIME strip mode	Controls whether or not multipart MIME stripping is performed on requests from this zone. This option should normally be left as the default *Off*.	Off	Neighbor
SIP UPDATE strip mode	Controls whether or not the VCS strips the UPDATE method from the Allow header of all requests and responses received from, and sent to, this zone. This option should normally be left as the default *Off*. However, some systems do not support the UPDATE method in the Allow header, so for these zones this should be set to *On*.	Off	Neighbor
Interworking SIP search strategy	Determines how the VCS searches for SIP endpoints when interworking an H.323 call. *Options*: the VCS sends an OPTIONS request. *Info*: the VCS sends an INFO request. This option should normally be left as the default *Options*. However, some endpoints cannot respond to OPTIONS requests, so this must be set to *Info* for such endpoints.	Options	Neighbor
SIP UDP/BFCP filter mode	Determines whether INVITE requests sent to this zone filter out UDP/BFCP. This option may be required to enable interoperability with SIP devices that do not support the UDP/BFCP protocol. *On*: any media line referring to the UDP/BFCP protocol is replaced with TCP/BFCP and disabled. *Off*: INVITE requests are not modified.	Off	Neighbor DNS

Setting	Description	Default	Zone types
SIP UDP/IX filter mode	Determines whether INVITE requests sent to this zone filter out UDP/UDT/IX or UDP/DTLS/UDT/IX. This option may be required to enable interoperability with SIP devices that do not support the UDP/UDT/IX or UDP/DTLS/UDT/IX protocol. *On*: any media line referring to the UDP/UDT/IX or UDP/DTLS/UDT/IX protocol is replaced with RTP/AVP and disabled. *Off*: INVITE requests are not modified. We recommend that **SIP UDP/IX filter mode** is set to *On* for: ■ business-to-business calls routed through neighbor zones that connect to external networks / non-Cisco infrastructure ■ calls that connect internally to Unified CM 8.x or earlier (use *Off* for 9.x or later)	Off	Neighbor DNS
SIP Duo Video filter mode	Determines whether INVITE requests sent to this zone filter out Duo Video. This option may be required to enable interoperability with SIP devices that do not support Duo Video. *On*: the second video line in any outgoing INVITE request is removed. *Off*: INVITE requests are not modified.	Off	Neighbor DNS
SIP record route address type	Controls whether the VCS uses its IP address or host name in the record-route or path headers of outgoing SIP requests to this zone. *IP*: uses the VCS's IP address. *Hostname*: uses the VCS's **System host name** (if it is blank the IP address is used instead).	IP	Neighbor DNS
SIP Proxy-Require header strip list	A comma-separated list of option tags to search for and remove from Proxy-Require headers in SIP requests received from this zone.	None	Neighbor
Include address record	Determines whether, if no NAPTR (SIP) or SRV (SIP and H.323) records have been found for the dialed alias via this zone, the VCS will then query for A and AAAA DNS records before moving on to query lower priority zones. If A and AAAA records exist at the same domain for systems other than those that support SIP or H.323, this may result in the VCS believing the search was successful and forwarding calls to this zone, and the call will fail. *On*: the VCS queries for A or AAAA records. If any are found, the VCS will not then query any lower priority zones. *Off*: the VCS will not query for A and AAAA records and instead will continue with the search, querying the remaining lower priority zones.	Off	DNS

Zone configuration: pre-configured profile settings

The table below shows the advanced zone configuration option settings that are automatically applied for each of the pre-configured profiles.

Setting	Cisco Unified Communications Manager	Cisco Unified Communications Manager (8.6.1 or later)	Nortel Communication Server 1000	Infrastructure device	Default
Monitor peer status	Yes	Yes	Yes	No	Yes
Call signaling routed mode	Always	Always	Auto	Always	Auto
Automatically respond to H.323 searches	Off	Off	Off	On	Off
H.323 call signaling port	1720	1720	1720	1720	1720
Automatically respond to SIP searches	Off	Off	Off	On	Off
Send empty INVITE for interworked calls	On	On	On	On	On
SIP poison mode	Off	Off	Off	Off	Off
SIP encryption mode	Auto	Auto	Auto	Auto	Auto
SIP REFER mode	Forward	Forward	Forward	Forward	Forward
SIP SDP attribute line limit mode	Off	Off	Off	Off	Off
SIP SDP attribute line limit length	130	130	130	130	130
SIP multipart MIME strip mode	Off	Off	Off	Off	Off
SIP UPDATE strip mode	Off	Off	On	Off	Off
Interworking SIP search strategy	Options	Options	Options	Options	Options
SIP UDP/BFCP filter mode	On	Off	Off	Off	Off
SIP UDP/IX filter mode	On	On	On	On	Off
SIP Duo Video filter mode	Off	Off	Off	Off	Off
SIP record route address type	IP	IP	IP	IP	IP
SIP Proxy-Require header strip list	<blank>	<blank>	"com.nortelnetworks.firewall"	<blank>	<blank>

For more information about configuring a SIP trunk between VCS and Unified CM, see *Cisco Unified Communications Manager with VCS Deployment Guide*.

TLS certificate verification of neighbor systems

When a SIP TLS connection is established between a VCS and a neighbor system, the VCS can be configured to check the X.509 certificate of the neighbor system to verify its identity. You do this by configuring the zone's **TLS verify mode** setting.

If **TLS verify mode** is enabled, the neighbor system's FQDN or IP address, as specified in the **Peer address** field of the zone's configuration, is used to verify against the certificate holder's name contained

within the X.509 certificate presented by that system. (The name has to be contained in either the Subject Common Name or the Subject Alternative Name attributes of the certificate.) The certificate itself must also be valid and signed by a trusted certificate authority.

Note that for traversal server and DNS zones, the FQDN or IP address of the connecting traversal client is not configured, so the required certificate holder's name is specified separately.

If the neighbor system is another VCS, or it is a traversal client / traversal server relationship, the two systems can be configured to authenticate each other's certificates. This is known as mutual authentication and in this case each VCS acts both as a client and as a server and therefore you must ensure that each VCS's certificate is valid both as a client and as a server.

See About security certificates [p.309] for more information about certificate verification and for instructions on uploading the VCS's server certificate and uploading a list of trusted certificate authorities.

Configuring a zone for incoming calls only

To configure a zone so that it is never sent an alias search request (for example if you only want to receive incoming calls from this zone), do not define any search rules that have that zone as its target.

In this scenario, when viewing the zone, you can ignore the warning indicating that search rules have not been configured.

Clustering and peers

This section describes how to set up a cluster of VCS peers. Clustering is used to increase the capacity of your VCS deployment and to provide resiliency.

About clusters 182
License usage within a cluster 184
Managing clusters and peers 186
Troubleshooting cluster replication problems 194

About clusters

A VCS can be part of a cluster of up to six VCSs. Each VCS in the cluster is a peer of every other VCS in the cluster. When creating a cluster, you define a cluster name and nominate one peer as the master from which all relevant configuration is replicated to the other peers in the cluster. Clusters are used to:

- Increase the capacity of your VCS deployment compared with a single VCS.
- Provide redundancy in the rare case that a VCS becomes inaccessible (for example, due to a network or power outage) or while it is in maintenance mode (for example, during a software upgrade).

Peers share information with each other about their use of bandwidth, registrations, and user accounts. This allows the cluster to act as one large VCS Local Zone as shown in the example below.

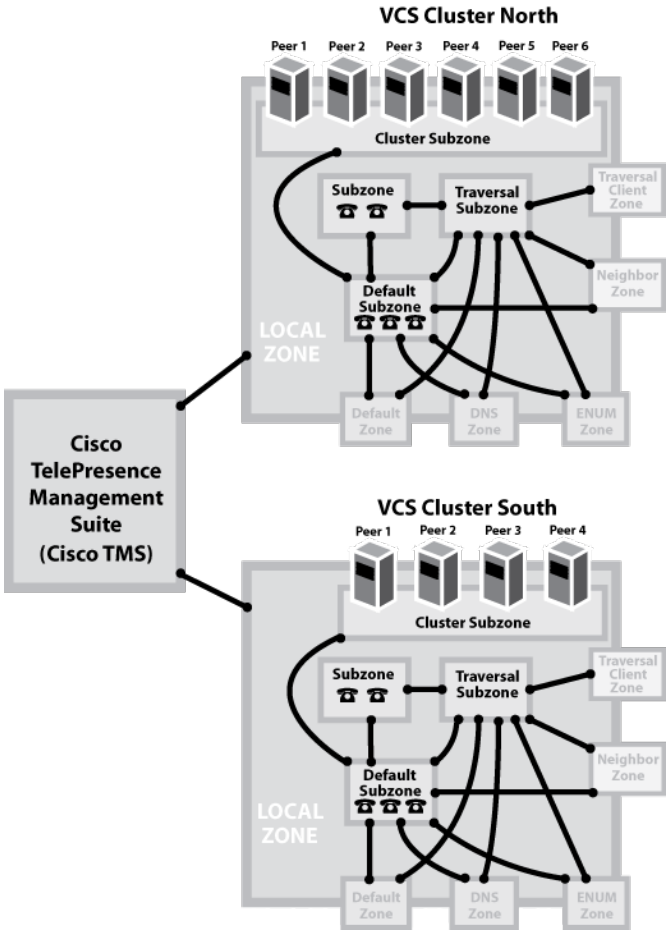

About the configuration master

All peers in a cluster must have identical configuration for subzones, zones, links, pipes, authentication, bandwidth control and Call Policy. To achieve this, you define a cluster name and nominate one peer as the configuration master. Any configuration changes made to the master peer are then automatically replicated across all the other peers in the cluster.

You should only make configuration changes on the master VCS. Any changes made on other peers are not reflected across the cluster, and will be overwritten the next time the master's configuration is replicated across the peers. The only exceptions to this are some peer-specific configuration items.

You may need to wait up to one minute before changes are updated across all peers in the cluster.

Secure communication between peers

The VCS uses IPsec (Internet Protocol Security) to enable secure communication between each cluster peer. Authentication is carried out through the use of a pre-shared access key.

Each peer in the cluster must be individually configured with the IP address and associated access key of every other peer in that cluster.

License usage within a cluster

The following types of licenses are pooled for use by any peer in a cluster, irrespective of which peer the licenses are installed on:

- Traversal or non-traversal call licenses
- TURN relay licenses

License usage is limited by the maximum physical capacity of each VCS system according to the type of appliance or VM:

Table 4: Maximum physical capacity per peer

	Small / Medium systems	Large systems
Traversal calls	150	500
Non-traversal calls	750	750
Registrations	2500	5000
TURN relays *	1800	6000

* On a Large system, the total TURN capacity of 6000 relays is spread evenly across 6 ports; each port is limited to handling 1000 relays. On a Small/Medium system, there is a single TURN port that handles up to 1800 relays.

Note that each VCS comes pre-installed with 2,500 registration licenses, and that registration licenses are not shared across a cluster.

If two endpoints are registered to different cluster peers, and a SIP call is made between them, two non-traversal licenses are used. If the call is made over H.323, only one non-traversal license is used.

You can cluster up to 6 VCS systems to increase capacity by a maximum factor of 4 (see Performance capabilities [p.381] for more information).

If a cluster peer becomes unavailable, the shareable licenses installed on that peer remain available to the rest of the cluster peers for two weeks from the time the cluster lost contact with the peer. This will maintain the overall license capacity of the cluster — however, note that each peer is still limited by its physical capacity as listed above. After this two week period, the licenses associated with the unavailable peer are removed from the cluster. To maintain the same capacity for your cluster, you should ensure that either the problem with the peer is resolved or new option keys are installed on another peer in the cluster.

Note that you are also limited to the number of call license option keys that can be installed (purchased) per VCS peer as follows:

Table 5: Maximum call license option keys that can be installed (purchased) per peer

	Small / Medium systems	Large systems
Traversal calls	100	500
Non-traversal calls	500	500
TURN relays	1800	6000

You can see a summary of all of the call, registration and TURN relay licenses installed on each cluster peer by going to the **Option keys** page and scrolling down to the **Current licenses** section.

Capacity alarms are raised if either of the following usage thresholds are reached:

- the number of concurrent traversal/non-traversal calls reaches 90% of the capacity of the cluster
- the number of concurrent traversal/non-traversal calls on any one unit reaches 90% of the physical capacity of the unit

Example deployment

If, for example, you want to deploy a resilient cluster that can handle up to 750 concurrent non-traversal calls and 250 concurrent traversal calls you could configure 4 peers as follows:

	Peer 1	Peer 2	Peer 3	Peer 4	Total cluster capacity
Non-traversal call licenses	250	250	250	0	750
Traversal call licenses	100	100	50	0	250

It would not matter to which peer an endpoint registers as the call licenses are shared across all of the peers. If any one of the peers is temporarily taken out of service the full set of call licenses will remain available to the entire cluster.

However, we recommend that, where possible, the number of licenses is configured evenly across all peers in the cluster.

Managing clusters and peers

Setting up a cluster

Before setting up a cluster of X8.2 VCS peers or adding an X8.2 VCS to a cluster, ensure that:

- All clusters peers are running the same version of code. The only occasion where different peers are allowed to run different versions of code is for the short period of time while a cluster is being upgraded from one version of code to another, during which time the cluster will operate in a partitioned fashion.
- A DNS SRV record is available for the cluster which contains A or AAAA records for each peer of the cluster.
- Each peer has a different LAN configuration (a different IPv4 address and a different IPv6 address, where enabled).
- Each peer in a cluster is within a 15ms hop (30ms round trip delay) of each and every other VCS in or to be added to the cluster.
- Each peer in a cluster is directly routable to each and every other VCS in or to be added to the cluster. (There must be no NAT between cluster peers – if there is a firewall ensure that the required ports are opened.)
- Each peer is using a hardware platform (appliance or virtual machine) with equivalent capabilities; for example, you can cluster peers that are running on standard appliances with peers running on 2 core Medium VMs, but you cannot cluster a peer running on a standard appliance with peers running on 8 core Large VMs.
- All peers have the same set of option keys installed:
  - The number of call license keys may be different on different peers; all other license keys must be identical on each peer.
  - The VCS must be restarted after installing some option keys in order to fully activate them.
- Cisco TMS, if used, is running version 13.2 or later (12.6 or later is permitted if you are not using Cisco TMS for provisioning or FindMe).
- Each peer has a different system name.
- H.323 mode is enabled on each peer (**Configuration > Protocols > H.323**, and for **H.323 mode** select *On*); even if all endpoints in the cluster are SIP only, H.323 signaling is used for endpoint location searching and sharing bandwidth usage information with other peers in the cluster.
- The VCS cluster has a DNS SRV record that defines all cluster peers.
- The DNS servers used by the VCS peers must support both forward and reverse DNS lookups of Cisco TMS and all VCS peer addresses; the DNS servers must also provide address lookup for any other DNS functionality required, such as:
  - NTP servers or the external manager if they configured using DNS names
  - Microsoft Lync Server FQDN lookup
  - LDAP server forward and reverse lookup (reverse lookups are frequently provided through PTR records).

  Note that DNS server configuration is specific to each peer.
- If Cisco TMS is to be used for replicating FindMe and/or Provisioning data, ensure that Provisioning Extension mode functionality has been enabled on Cisco TMS (see *Cisco TMS Provisioning Extension Deployment Guide* for details).

Then, to create your cluster you must first configure a master peer and then add the other peers into the cluster one-by-one.

You are recommended to backup your VCS data before setting up a cluster.

A full step-by-step guide to setting up and configuring clusters is available in the *VCS Cluster Creation and Maintenance Deployment Guide*.

Maintaining a cluster

The **Clustering** page (**System > Clustering**) lists the IP addresses of all the peers in the cluster, to which this VCS belongs, and identifies the master peer.

Cluster name

The **Cluster name** is used to identify one cluster of VCSs from another. Set it to the fully qualified domain name (FQDN) used in SRV records that address this VCS cluster, for example `cluster1.example.com`.

The FQDN can comprise multiple levels. Each level's name can only contain letters, digits and hyphens, with each level separated by a period (dot). A level name cannot start or end with a hyphen, and the final level name must start with a letter.

A cluster name is also required if FindMe is enabled.

Cluster pre-shared key

The VCS uses IPsec (Internet Protocol Security) to enable secure communication between each cluster peer.

The **Cluster pre-shared key** is the common IPsec access key used by each peer to access every other peer in the cluster.

Note: each peer in the cluster must be configured with the same **Cluster pre-shared key**.

Setting configuration for the cluster

You should only make configuration changes on the master VCS. Any changes made on other peers are not reflected across the cluster, and will be overwritten the next time the master's configuration is replicated across the peers. The only exceptions to this are some peer-specific configuration items.

You may need to wait up to one minute before changes are updated across all peers in the cluster.

Adding and removing peers from a cluster

After a cluster has been set up you can add new peers to the cluster or remove peers from it.

Note that:

- Systems that are configured as peers must not also be configured as neighbors to each other, and vice versa.
- If peers are deployed on different LANs, there must be sufficient connectivity between the networks to ensure a low degree of latency between the peers - a maximum delay of 15ms one way, 30ms round-trip.
- Cluster peers can be in separate subnets. Peers communicate with each other using H.323 messaging, which can be transmitted across subnet boundaries.
- Deploying all peers in a cluster on the same LAN means they can be configured with the same routing information such as local domain names and local domain subnet masks.

Changing the master peer

You should only need to change the **Configuration master** when:

- the original master peer fails
- you want to take the master VCS unit out of service

Note that if the master fails, the remaining peers will continue to function normally, except they are no longer able to copy their configuration from the master so they may become out of sync with each other.

To change the master peer you must log in to every other VCS in the cluster and change the configuration master on each peer:

1. Log in to the VCS and go to **System > Clustering**.
2. Change the **Configuration master** to the peer you want to set as the new master (the numbers match against the **Peer IP address** fields underneath).
3. Click **Save**.
4. Repeat this for every peer in the cluster, ensuring that you select the same new master on each peer.

Note that during this process you may see alarms raised on some peers about inconsistent master peer configuration. These alarms will be lowered when every peer in the cluster is configured with the new master.

Monitoring the status of the cluster

The status sections at the bottom of the **Clustering** page show you the current status of the cluster, and the time of the previous and next synchronization.

Specifying peer-specific items in clustered systems

Most items of configuration are applied to all peers in a cluster. However, the following items (marked with a † on the web interface) must be specified separately on each cluster peer.

Cluster configuration (System > Clustering)

The list of **Peer IP addresses** (including the peer's own IP address) that make up the cluster has to be specified on each peer and they must be identical on each peer.

The **Cluster name** and **Cluster pre-shared key** have to be specified on each peer and must be identical for all peers.

Ethernet speed (System > Ethernet)

The **Ethernet speed** is specific to each peer. Each peer may have slightly different requirements for the connection to their Ethernet switch.

IP configuration (System > IP)

LAN configuration is specific to each peer.

- Each peer must have a different **IPv4 address** and a different **IPv6 address**.
- **IP gateway** configuration is peer-specific. Each peer can use a different gateway.
- IP routes (also known as static routes) are peer-specific. If these are used, they can be different for each peer.

Note that the IP protocol is applied to all peers, because each peer must support the same protocols.

System name (System > Administration)

The **System name** must be different for each peer in the cluster.

DNS servers and DNS host name (System > DNS)

DNS servers are specific to each peer. Each peer can use a different set of DNS servers.

The **System host name** and **Domain name** are specific to each peer.

NTP servers and time zone (System > Time)

The **NTP servers** are specific to each peer. Each peer may use one or more different NTP servers.

The **Time zone** is specific to each peer. Each peer may have a different local time.

SNMP (System > SNMP)

SNMP settings are specific to each peer. They can be different for each peer.

Logging (Maintenance > Logging)

The Event Log and Configuration Log on each peer only report activity for that particular VCS. The **Log level** and the list of **Remote syslog servers** are specific to each peer. We recommend that you set up a remote syslog server to which the logs of all peers can be sent. This allows you to have a global view of activity across all peers in the cluster. See the logging section for further details.

Security certificates (Maintenance > Security certificates)

The trusted CA certificate, server certificate and certificate revocation lists (CRLs) used by the VCS must be uploaded individually per peer.

Administration access (System > Administration)

The following system administration access settings are specific to each peer:

- Serial port / console
- SSH service
- Web interface (over HTTPS)
- Redirect HTTP requests to HTTPS
- Automated protection service

Option keys (Maintenance > Option keys)

Option keys are specific to each peer. Each peer must have an identical set of option keys installed, but you must purchase these separately for each peer in the cluster. However, this does not apply to traversal call licenses, non-traversal call licenses and TURN relay licenses; these licenses can be installed on any cluster peer and are available for use by any peer in the cluster.

Active Directory Service (Configuration > Authentication > Devices > Active Directory Service)

When configuring the connection to an Active Directory Service for device authentication, the **NetBIOS machine name (override)**, and domain administrator **Username** and **Password** are specific to each peer.

Conference Factory template (Applications > Conference Factory)

The template used by the Conference Factory application to route calls to the MCU is peer-specific, as it must be unique for each peer in the cluster.

VCS front panel display mode (configurable through CLI only)

The **`xConfiguration Administration LCDPanel Mode`** CLI setting is specific to each peer.

Note: configuration data that is applied across all peers should not be modified on non-master peers. At best it will result in the changes being overwritten from the master; at worst it will cause cluster replication to fail.

Sharing registrations across peers

When a cluster peer receives a search request (such as an LRQ, ARQ or an INVITE), it checks its own and its peers' registration lists before responding. This allows all endpoints in the cluster to be treated as if they were registered with a single VCS.

Peers are periodically queried to ensure they are still functioning. To prevent delays during call setup, any nonfunctioning peers do not receive LRQs.

H.323 registrations

All the peers in a cluster share responsibility for their H.323 endpoint community. When an H.323 endpoint registers with one peer, it receives a registration response which contains a list of alternate gatekeepers, populated with a randomly ordered list of the IP addresses of all the other peers in that cluster.

If the endpoint loses contact with the initial peer, it will seek to register with one of the other peers. The random ordering of the list of alternate peers ensures that endpoints that can only store a single alternate peer will failover evenly across the cluster.

When using a cluster, you should change the registration **Time to live** on all peers in the cluster from the default 30 minutes to just a few minutes. This setting determines how often endpoints are required to re-register with their VCS, and reducing this to just a few minutes ensures that if one VCS becomes unavailable, the endpoint will quickly failover to one of its peers. To change this setting, go to **Configuration > Protocols > H.323 > Gatekeeper > Time to live**.

SIP registrations

The VCS supports multiple client-initiated connections (also referred to as "SIP Outbound") as outlined in *RFC 5626*.

This allows SIP endpoints that support *RFC 5626* to be simultaneously registered to multiple VCS cluster peers. This provides extra resiliency: if the endpoint loses its connection to one cluster peer it will still be able to receive calls via one of its other registration connections.

You can also use DNS round-robin techniques to implement a registration failover strategy. Some SIP UAs, such as Jabber Video, can be configured with a SIP server address that is an FQDN. If the FQDN resolves to a round-robin DNS record populated with the IP addresses of all the peers in the cluster, then this could allow the endpoint to re-register with another peer if its connection to the original peer is lost.

Sharing bandwidth across peers

When clustering has been configured, all peers share the bandwidth available to the cluster.

- Peers must be configured identically for all aspects of bandwidth control including subzones, links and pipes.
- Peers share their bandwidth usage information with all other peers in the cluster, so when one peer is consuming part or all of the bandwidth available within or from a particular subzone, or on a particular pipe, this bandwidth will not be available for other peers.

For general information on how the VCS manages bandwidth, see the bandwidth control section.

Cluster upgrades, backup and restore

Upgrading a cluster

Instructions for upgrading and downgrading clusters are contained in *VCS Cluster Creation and Maintenance Deployment Guide*.

Backing up a cluster

The backup and restore process can be used to save and restore cluster configuration information.

The backup process saves all configuration information for the cluster, regardless of the VCS used to make the backup.

Restoring a cluster

You cannot restore data to a VCS that is a part of a cluster.

To restore previously backed up cluster configuration data you must follow this process:

1. Remove the VCS peer from the cluster so that it becomes a standalone VCS.
2. Restore the configuration data to the standalone VCS.
3. Build a new cluster using the VCS that now has the restored data.
4. Take each of the other peers out of their previous cluster and add them to the new cluster. See Setting up a cluster [p.186] for more information about adding and removing cluster peers.

Clustering and Presence

Clustering supports the use of Presence.

- All peers in the cluster must have identical SIP domain, Presence Server and Presence User Agent (PUA) configuration.
- If peers in the cluster have the PUA enabled, each peer publishes information about its own local registrations. This information is routed to a Presence Server authoritative for the cluster's domain.
- If peers have the Presence Server enabled, the Presence database is replicated across all peers in the cluster.

When viewing presence status on a peer in a cluster:

- **Publishers** shows all presentities across the cluster for whom presence information is being published.
- **Presentities** shows any presentity for whom a subscription request has been received on the local VCS only.
- **Subscribers** shows each endpoint from which a subscription request has been received on the local VCS only.

Clustering and Cisco TMS

Cisco TMS version 13.2 or later is mandatory if your cluster is configured to use FindMe or Device Provisioning. From X8.1 onwards you must use Cisco TelePresence Management Suite Provisioning Extension.

Size limitations for clusters and provisioning

A VCS cluster of any size supports up to:

- 10,000 FindMe accounts
- 10,000 users for provisioning
- 200,000 phonebook entries

Note that:

- Small/Medium systems can support up to 2,500 device registrations per peer, subject to a maximum of 10,000 registrations per cluster. Typically this means one device per FindMe account.
- Large systems can support up to 5,000 device registrations per peer (with a maximum of 20,000 registrations per cluster). However, you are still limited to 10,000 FindMe accounts/users and 10,000 provisioned devices per cluster.

If you need to provision more than 10,000 devices, your network will require additional VCS clusters with an appropriately designed and configured dial plan.

See *VCS Cluster Creation and Maintenance Deployment Guide* for more information about using clusters with Cisco TMS.

About the Cluster Subzone

When two or more VCSs are clustered together, a new subzone is created within the cluster's Local Zone. This is the Cluster Subzone (see the diagram in the About clusters [p.182] section). Any calls between two peers in the cluster will briefly pass via this subzone during call setup.

The Cluster Subzone is (like the Traversal Subzone) a virtual subzone used for call routing only, and endpoints cannot register to this subzone. After a call has been established between two peers, the Cluster Subzone will no longer appear in the call route and the call will appear as having come from (or being routed to) the Default Subzone.

The two situations in which a call will pass via the Cluster Subzone are:

- Calls between two endpoints registered to different peers in the cluster.
  For example, Endpoint A is registered in the Default Subzone to Peer 1. Endpoint B is also registered in the Default Subzone, but to Peer 2. When A calls B, the call route is shown on Peer 1 as **Default Subzone -> Cluster Subzone**, and on Peer 2 as **Cluster Subzone -> Default Subzone**.
- Calls received from outside the cluster by one peer, for an endpoint registered to another peer.
  For example, we have a single VCS for the Branch Office, which is neighbored to a cluster of 4 VCSs at the Head Office. A user in the Branch Office calls Endpoint A in the Head Office. Endpoint A is registered in the Default Subzone to Peer 1. The call is received by Peer 2, as it has the lowest resource usage at that moment. Peer 2 then searches for Endpoint A within the cluster's Local Zone, and finds that it is registered to Peer 1. Peer 2 then forwards the call to Peer 1, which forwards it to Endpoint A. In this case, on Peer 2 the call route will be shown as **Branch Office -> Default Subzone -> Cluster Subzone**, and on Peer 1 as **Cluster Subzone -> Default Subzone**.

Note that if **Call signaling optimization** is set to *On* and the call is H.323, the call will not appear on Peer 2, and on Peer 1 the route will be **Branch Office > Default Subzone**.

Neighboring the local VCS to another VCS cluster

You can neighbor your local VCS (or VCS cluster) to a remote VCS cluster; this remote cluster could be a neighbor, traversal client, or traversal server to your local VCS. In this case, when a call is received on your local VCS and is passed via the relevant zone to the remote cluster, it will be routed to whichever peer in that neighboring cluster has the lowest resource usage. That peer will then forward the call as appropriate to one of its:

- locally registered endpoints (if the endpoint is registered to that peer)
- peers (if the endpoint is registered to another peer in that cluster)
- external zones (if the endpoint has been located elsewhere)

When configuring a connection to a remote cluster, you create a single zone and configure it with details of all the peers in the cluster. Adding this information to the zone ensures that the call is passed to that cluster regardless of the status of the individual peers.

You also need to enter the IP address of all peers in the remote cluster when the connection is via a **neighbor** or **traversal client** zone. You do not do this for **traversal server** zones, as these connections are not configured by specifying the remote system's IP address.

Note: systems that are configured as peers must **not** also be configured as neighbors to each other, and vice versa.

Neighboring your clusters

To neighbor your local VCS (or VCS cluster) to a remote VCS cluster, you create a single zone to represent the cluster and configure it with the details of all the peers in that cluster:

1. On your local VCS (or, if the local VCS is a cluster, on the master peer), create a zone of the appropriate type. This zone will represent the connection to the cluster.
2. In the **Location** section, enter the IP address or FQDN of each peer in the remote cluster in the **Peer 1** to **Peer 6** address fields.

Note that:

- Ideally you should use IP addresses in these fields. If you use FQDNs instead, each FQDN must be different and must resolve to a single IP address for each peer.
- The order in which the peers in the remote VCS cluster are listed here does not matter.
- Whenever you add an extra VCS to a cluster (to increase capacity or improve redundancy, for example) you will need to modify any VCSs which neighbor to that cluster to let them know about the new cluster peer.

Troubleshooting cluster replication problems

Cluster replication can fail for a variety of reasons. This section describes the most common problems and how to resolve them.

More comprehensive information is available in *VCS Cluster Creation and Maintenance Deployment Guide*.

Some peers have a different master peer defined

1. For each peer in the cluster, go to the **System > Clustering** page.
2. Ensure each peer identifies the same **Configuration master**.

Unable to reach the cluster configuration master peer

The VCS operating as the master peer could be unreachable for many reasons, including:

- network access problems
- VCS unit is powered down
- incorrectly configured IP addresses
- incorrectly configured IPsec keys - ensure each peer is configured with the same **Cluster pre-shared key** value
- different software versions

"Manual synchronization of configuration is required" alarms are raised on peer VCSs

1. Log in to the peer as **admin** through the CLI (available by default over SSH and through the serial port).
2. Type `xCommand ForceConfigUpdate`.

This will delete the non-master VCS configuration and force it to update its configuration from the master VCS.

CAUTION: never issue this command on the master VCS, otherwise all configuration for the cluster will be lost.

Dial plan and call processing

This section provides information about the pages that appear under the Calls, Dial plan, Transforms and Call Policy sub-menus of the **Configuration** menu. These pages are used to configure the way in which the VCS receives and processes calls.

Call routing process 196
Configuring hop counts 198
Configuring dial plan settings 199
About transforms and search rules 200
Example searches and transforms 206
Configuring search rules to use an external service 215
About Call Policy 218
Supported address formats 223
Dialing by IP address 225
About URI dialing 227
About ENUM dialing 235
Configuring DNS servers for ENUM and URI dialing 241
Configuring call routing and signaling 242
Identifying calls 243
Disconnecting calls 244

Call routing process

One of the functions of the VCS is to route calls to their appropriate destination. It does this by processing incoming search requests in order to locate the given target alias. These search requests are received from:

- locally registered endpoints
- neighboring systems, including neighbors, traversal clients and traversal servers
- endpoints on the public internet

There are a number of steps involved in determining the destination of a call, and some of these steps can involve transforming the alias or redirecting the call to other aliases.

It is important to understand the process before setting up your dial plan so you can avoid circular references, where an alias is transformed from its original format to a different format, and then back to the original alias. The VCS is able to detect circular references. If it identifies one it will terminate that branch of the search and return a "policy loop detected" error message.

How the VCS determines the destination of a call

The process followed by the VCS when attempting to locate a destination endpoint is described below.

1. The caller enters into their endpoint the alias or address of the destination endpoint. This alias or address can be in a number of different address formats.
2. The destination address is sent from the caller's endpoint to its local VCS (the VCS to which it is registered).
3. Any pre-search transforms are applied to the alias.
4. Any Call Policy is applied to the (transformed) alias. If this results in one or more new target aliases, the process starts again with the new aliases checked against the pre-search transforms.
5. Any User Policy (if FindMe is enabled) is applied to the alias. If the alias is a FindMe ID that resolves to one or more new target aliases, the process starts again with all the resulting aliases checked against pre-search transforms and Call Policy.
6. The VCS then searches for the alias according to its search rules:
   - A matching rule may apply a zone transform to the alias before sending the query on to its **Target**. A **Target** can be one of the following types:
     - **Local Zone**: the endpoints and devices registered to the VCS.
     - **Neighbor zone**: one of the VCS's configured external neighbor zones, or a DNS or ENUM lookup zone.
     - **Policy service**: an external service or application, such as a Cisco TelePresence Conductor. The service will return some CPL which could, for example, specify the zone to which the call should be routed, or it could specify a new destination alias.
7. If the search returns a new URI or alias (for example, due to a DNS or ENUM lookup, or the response from a policy service), the process starts again: the new URI is checked against any pre-search transforms, Call Policy and User Policy are applied and a new VCS search is performed.
8. If the alias is found within the Local Zone, in one of the external zones, or a routing destination is returned by the policy service, the VCS attempts to place the call.
9. If the alias is not found, it responds with a message to say that the call has failed.

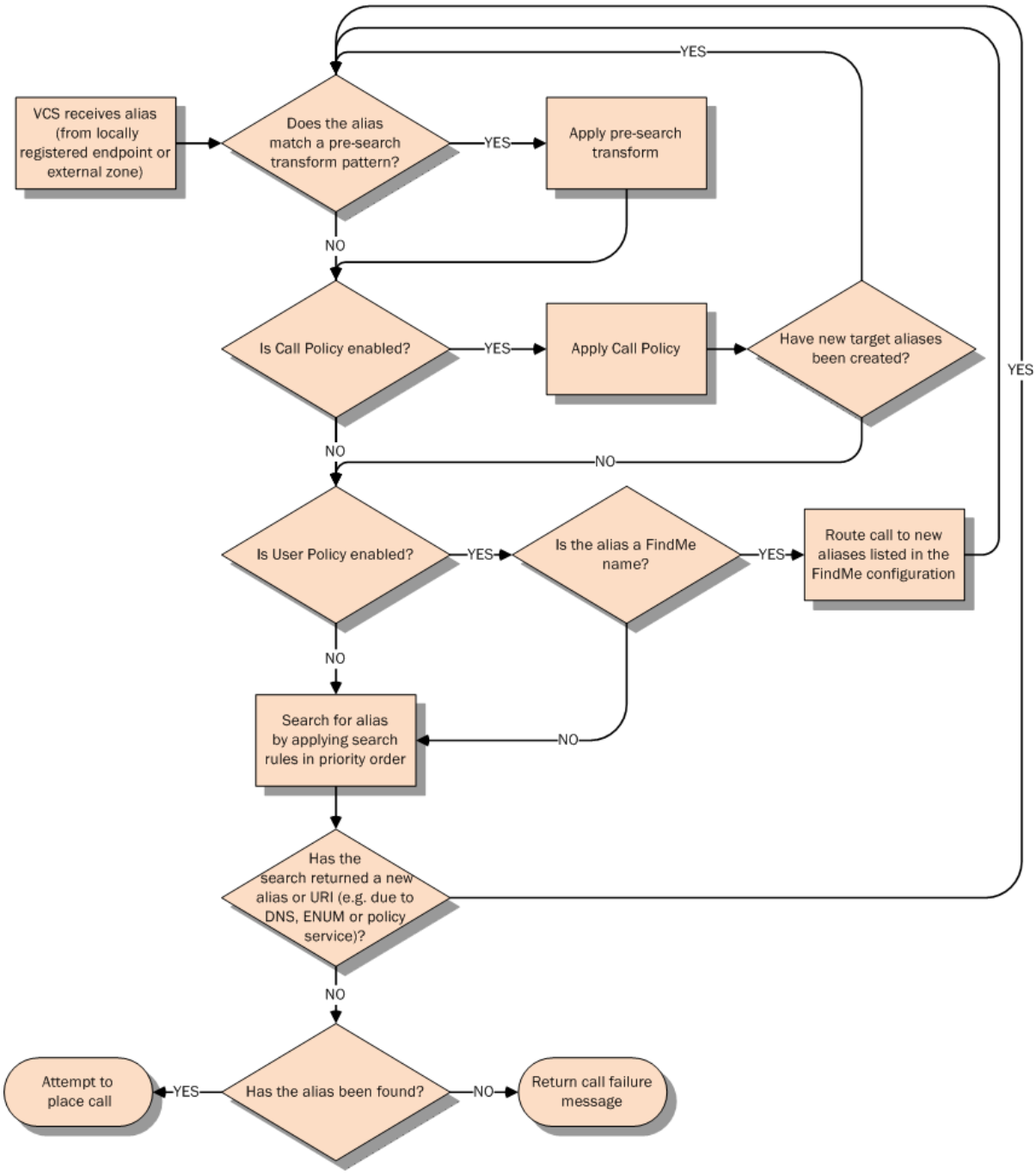
VCS receives alias (from locally registered endpoint or external zone)
Does the alias match a pre-search transform pattern?
YES
Apply pre-search transform
NO
Is Call Policy enabled?
YES
Apply Call Policy
Have new target aliases been created?
YES
NO
NO
Is User Policy enabled?
YES
Is the alias a FindMe name?
YES
Route call to new aliases listed in the FindMe configuration
NO
Search for alias by applying search rules in priority order
NO
Has the search returned a new alias or URI (e.g. due to DNS, ENUM or policy service)?
YES
NO
Attempt to place call
YES
Has the alias been found?
NO
Return call failure message

Configuring hop counts

Each search request is assigned a hop count value by the system that initiates the search. Every time the request is forwarded to another neighbor gatekeeper or proxy, the hop count value is decreased by a value of 1. When the hop count reaches 0, the request will not be forwarded on any further and the search will fail.

For search requests initiated by the local VCS, the hop count assigned to the request is configurable on a zone-by-zone basis. The zone's hop count applies to all search requests originating from the local VCS that are sent to that zone.

Search requests received from another zone will already have a hop count assigned. When the request is subsequently forwarded on to a neighbor zone, the lower of the two values (the original hop count or the hop count configured for that zone) is used.

For H.323, the hop count only applies to search requests. For SIP, the hop count applies to all requests sent to a zone (affecting the Max-Forwards field in the request).

The hop count value can be between 1 and 255. The default is 15.

Note: if your hop counts are set higher than necessary, you may risk introducing loops into your network. In these situations a search request will be sent around the network until the hop count reaches 0, consuming resources unnecessarily. This can be prevented by setting the Call loop detection mode to *On*.

When dialing by URI or ENUM, the hop count used is that for the associated DNS or ENUM zone via which the destination endpoint (or intermediary SIP proxy or gatekeeper) was found.

Configuring hop counts for a zone

Hop counts are configured on a zone basis. To configure the hop count for a zone:

1. Go to the **Zones** page (**Configuration > Zones > Zones**).
2. Click on the name of the zone you want to configure. You are taken to the **Edit zone** page.
3. In the **Configuration** section, in the **Hop count** field, enter the hop count value you want to use for this zone.

For full details on other zone options, see the Configuring zones [p.165] section.

Configuring dial plan settings

The **Dial plan configuration** page (**Configuration > Dial plan > Configuration**) is used to configure how the VCS routes calls in specific call scenarios.

The configurable options are:

Field	Description	Usage tips
Calls to unknown IP addresses	Determines the way in which the VCS attempts to call systems which are not registered with it or one of its neighbors. *Direct*: allows an endpoint to make a call to an unknown IP address without the VCS querying any neighbors. The call setup would occur just as it would if the far end were registered directly to the local system. *Indirect*: upon receiving a call to an unknown IP address, the VCS will query its neighbors for the remote address and if permitted will route the call through the neighbor. *Off*: endpoints registered directly to the VCS may only call an IP address of a system also registered directly to that VCS. The default is *Indirect*.	This setting applies to the call's destination address prior to any zone transforms, but after any pre-search transforms, Call Policy or User Policy rules have been applied. In addition to controlling calls, this setting also determines the behavior of provisioning and presence messages to SIP devices, as these messages are routed to IP addresses. See Dialing by IP address [p.225] for more information.
Fallback alias	The alias to which incoming calls are placed for calls where the IP address or domain name of the VCS has been given but no callee alias has been specified.	If no fallback alias is configured, calls that do not specify an alias will be disconnected. See below for more information.

About the fallback alias

The VCS could receive a call that is destined for it but which does not specify an alias. This could be for one of the following reasons:

- the caller has dialed the IP address of the VCS directly
- the caller has dialed a domain name belonging to the VCS (either one of its configured SIP domains, or any domain that has an SRV record that points at the IP address of the VCS), without giving an alias as a prefix

Normally such calls would be disconnected. However, such calls will be routed to the **Fallback alias** if it is specified. Note that some endpoints do not allow users to enter an alias and an IP address to which the call should be placed.

Example usage

You may want to configure your fallback alias to be that of your receptionist, so that all calls that do not specify an alias are still answered personally and can then be redirected appropriately.

For example, Example Inc has the domain of **`example.com`**. The endpoint at reception has the alias **`reception@example.com`**. They configure their VCS with a fallback alias of **`reception@example.com`**. This means that any calls made directly to **`example.com`** (that is, without being prefixed by an alias), are forwarded to **`reception@example.com`**, where the receptionist can answer the call and direct it appropriately.

About transforms and search rules

The VCS can be configured to use transforms and search rules as a part of its call routing process.

Transforms

Transforms are used to modify the alias in a search request if it matches certain criteria. You can transform an alias by removing or replacing its prefix, suffix, or the entire string, and by the use of regular expressions.

This transformation can be applied to the alias at two points in the routing process: as a pre-search transform, and as a zone transform.

- **Pre-search transforms are applied before any Call Policy or User Policy are applied and before the search process is performed (see About pre-search transforms [p.200] for more details).**
- **Zone transforms** are applied during the search process by each individual search rule as required. After the search rule has matched an alias they can be used to change the target alias before the search request is sent to a target zone or policy service (see Search and zone transform process [p.202] for more details).

Search rules

Search rules are used to route incoming search requests to the appropriate target zones (including the Local Zone) or policy services.

The VCS's search rules are highly configurable. You can:

- define alias, IP address and pattern matches to filter searches to specific zones or policy services
- define the priority (order) in which the rules are applied and stop applying any lower-priority search rules after a match is found; this lets you reduce the potential number of search requests sent out, and speed up the search process
- set up different rules according to the protocol (SIP or H.323) or the source of the query (such as the Local Zone, or a specific zone or subzone)
- limit the range of destinations or network services available to unauthenticated devices by making specific search rules applicable to authenticated requests only
- use zone transforms to modify an alias before the query is sent to a target zone or policy service

Note that multiple search rules can refer to the same target zone or policy service. This means that you can specify different sets of search criteria and zone transforms for each zone or policy service.

The VCS uses the protocol (SIP or H.323) of the incoming call when searching a zone for a given alias. If the search is unsuccessful the VCS may then search the same zone again using the alternative protocol, depending on where the search came from and the **Interworking mode** (**Configuration > Protocols > Interworking**):

- If the request has come from a neighboring system and **Interworking mode** is set to *Registered only*, the VCS searches the Local Zone using both protocols, and all other zones using the native protocol only (because it will interwork the call only if one of the endpoints is locally registered).
- If **Interworking mode** is set to *On*, or the request has come from a locally registered endpoint, the VCS searches the Local Zone and all external zones using both protocols.

About pre-search transforms

The pre-search transform function allows you to modify the alias in an incoming search request. The transformation is applied by the VCS before any Call Policy or User Policy is applied, and before any

searches take place.

- It applies to all incoming search requests received from locally registered endpoints, neighbor, traversal client and traversal server zones, and endpoints on the public internet.
- It does not apply to requests received from peers (which are configured identically and therefore will have already applied the same transform).

Each pre-search transform defines a string against which an alias is compared, and the changes to make to the alias if it matches that string.

After the alias has been transformed, it remains changed and all further call processing is applied to the new alias.

- Pre-search transforms are not applied to GRQ or RRQ messages received from endpoints registering with the VCS; endpoints will be registered with the aliases as presented in these messages.
- All peers in a cluster should be configured identically, including any pre-search transforms. Each VCS treats search requests from any of its peers as having come from its own Local Zone, and does not re-apply any pre-search transforms on receipt of the request.

Pre-search transform process

Up to 100 pre-search transforms can be configured. Each transform must have a unique priority number between 1 and 65534.

Every incoming alias is compared with each transform in order of priority, starting with that closest to 1. If and when a match is made, the transform is applied to the alias and no further pre-search checks and transformations of the new alias will take place. The new alias is then used for the remainder of the call routing process.

- Further transforms of the alias may take place during the remainder of the search process. This may be as a result of Call Policy (also known as Administrator Policy) or User Policy (if FindMe is enabled). If this is the case, the pre-search transforms are re-applied to the new alias.
- If you add a new pre-search transform that has the same priority as an existing transform, all transforms with a lower priority (those with a larger numerical value) will have their priority incremented by one, and the new transform will be added with the specified priority. However, if there are not enough “slots” left to move all the priorities down, you will get an error message.

Configuring pre-search transforms

The **Transforms** page (**Configuration > Dial plan > Transforms**) lists all the pre-search transforms currently configured on the VCS. It is used to create, edit, delete, enable and disable transforms.

Aliases are compared against each transform in order of **Priority**, until a transform is found where the alias matches the **Pattern** in the manner specified by the pattern **Type**. The alias is then transformed according to the **Pattern behavior** and **Replace string** rules before the search takes place (either locally or to external zones).

After the alias has been transformed, it remains changed. and all further call processing is applied to the new alias.

Note that transforms also apply to any Publication, Subscription or Notify URIs handled by the Presence Services, and to any Unified Communications messages.

The configurable options are:

Field	Description	Usage tips
Priority	The priority of the transform. Priority can be from 1 to 65534, with 1 being the highest priority. Transforms are applied in order of priority, and the priority must be unique for each transform.	
Description	An optional free-form description of the transform.	The description appears as a tooltip if you hover your mouse pointer over a transform in the list.
Pattern type	How the **Pattern string** must match the alias for the rule to be applied. Options are: *Exact*: the entire string must exactly match the alias character for character. *Prefix*: the string must appear at the beginning of the alias. *Suffix*: the string must appear at the end of the alias. *Regex*: treats the string as a regular expression.	You can test whether a pattern matches a particular alias and is transformed in the expected way by using the **Check pattern** tool (**Maintenance > Tools > Check pattern**).
Pattern string	Specifies the pattern against which the alias is compared.	The VCS has a set of predefined pattern matching variables that can be used to match against certain configuration elements.
Pattern behavior	Specifies how the matched part of the alias is modified. Options are: *Strip*: the matching prefix or suffix is removed. *Replace*: the matching part of the alias is substituted with the text in the Replace string. *Add Prefix*: prepends the **Additional text** to the alias. *Add Suffix*: appends the **Additional text** to the alias.	
Replace string	The string to substitute for the part of the alias that matches the pattern.	Only applies if the **Pattern behavior** is *Replace*. You can use regular expressions.
Additional text	The string to add as a prefix or suffix.	Only applies if the **Pattern behavior** is *Add Prefix* or *Add Suffix*.
State	Indicates if the transform is enabled or not.	Use this setting to test configuration changes, or to temporarily disable certain rules. Any disabled rules still appear in the rules list but are ignored.

Click on the transform you want to configure (or click **New** to create a new transform, or click **Delete** to remove a transform).

Search and zone transform process

The search rules and zone transform process is applied after all pre-search transforms, Call Policy and User Policy have been applied.

The process is as follows:

1. The VCS applies the search rules in priority order (all rules with a priority of 1 are processed first, then priority 2 and so on) to see if the given alias matches the rules criteria based on the **Source** of the query and the rule **Mode**.
2. If the match is successful, any associated zone transform (where the **Mode** is *Alias pattern match* and the **Pattern behavior** is *Replace* or *Strip*) is applied to the alias.
3. The search rule's **Target** zone or policy service is queried (with the revised alias if a zone transform has been applied) using the same protocol (SIP or H.323) as the incoming call request. Note that if there are many successful matches for multiple search rules at the same priority level, every applicable **Target** is queried.
   - If the alias is found, the call is forwarded to that zone. If the alias is found by more than one zone, the call is forwarded to the zone that responds first.
   - If the alias is not found using the native protocol, the query is repeated using the interworked protocol, depending on the interworking mode.
   - If the search returns a new URI or alias (for example, due to an ENUM lookup, or the response from a policy service), the entire Call routing process [p.196] starts again
4. If the alias is not found, the search rules with the next highest priority are applied (go back to step 1) until:
   - the alias is found, or
   - all target zones and policy services associated with search rules that meet the specified criteria have been queried, or
   - a search rule with a successful match has an **On successful match** setting of *Stop searching*

Note the difference between a successful match (where the alias matches the search rule criteria) and an alias being found (where a query sent to a target zone is successful). The *Stop searching* option provides better control over the network's signaling infrastructure. For example, if searches for a particular domain should always be routed to a specific zone this option lets you make the search process more efficient and stop the VCS from searching any other zones unnecessarily.

Configuring search rules

The **Search rules** page (**Configuration > Dial plan > Search rules**) is used to configure how the VCS routes incoming search requests to the appropriate target zones (including the Local Zone) or policy services.

The page lists all the currently configured search rules and lets you create, edit, delete, enable and disable rules. You can click on a column heading to sort the list, for example by **Target** or **Priority**. If you hover your mouse pointer over a search rule, the rule description (if one has been defined) appears as a tooltip.

You can also copy and then edit any existing search rule by clicking **Clone** in the **Actions** column.

Up to 2000 search rules can be configured. Priority 1 search rules are applied first, followed by all priority 2 search rules, and so on.

The configurable options are:

Field	Description	Usage tips
Rule name	A descriptive name for the search rule.	
Description	An optional free-form description of the search rule.	The description appears as a tooltip if you hover your mouse pointer over a rule in the list.

Field	Description	Usage tips
Priority	The order in the search process that this rule is applied, when compared to the priority of the other search rules. All Priority 1 search rules are applied first, followed by all Priority 2 search rules, and so on. More than one rule can be assigned the same priority, in which case any matching target zones are queried simultaneously. The default is 100.	The default configuration means that the Local Zone is searched first for all aliases. If the alias is not found locally, all neighbor, traversal client and traversal server zones are searched, and if they cannot locate the alias the request is sent to any DNS and ENUM zones.
Protocol	The source protocol for which the rule applies. The options are *Any*, *H.323* or *SIP*.	
Source	The sources of the requests for which this rule applies. *Any*: locally registered devices, neighbor or traversal zones, and any non-registered devices. *All zones*: locally registered devices plus neighbor or traversal zones. *Local Zone*: locally registered devices only. *Named*: a specific source zone or subzone for which the rule applies.	Named sources creates the ability for search rules to be applied as dial plan policy for specific subzones and zones.
Source name	The specific source zone or subzone for which the rule applies. Choose from the Default Zone, Default Subzone or any other configured zone or subzone.	Only applies if the **Source** is set to *Named*.
Request must be authenticated	Specifies whether the search rule applies only to authenticated search requests.	This can be used in conjunction with the VCS's Authentication Policy to limit the set of services available to unauthenticated devices.
Mode	The method used to test if the alias applies to the search rule. *Alias pattern match*: the alias must match the specified **Pattern type** and **Pattern string**. *Any alias*: any alias (providing it is not an IP address) is allowed. *Any IP Address*: the alias must be an IP address.	
Pattern type	How the **Pattern string** must match the alias for the rule to be applied. Options are: *Exact*: the entire string must exactly match the alias character for character. *Prefix*: the string must appear at the beginning of the alias. *Suffix*: the string must appear at the end of the alias. *Regex*: treats the string as a regular expression.	Applies only if the **Mode** is *Alias Pattern Match*. You can test whether a pattern matches a particular alias and is transformed in the expected way by using the **Check pattern** tool (**Maintenance > Tools > Check pattern**).

Field	Description	Usage tips
Pattern string	The pattern against which the alias is compared.	Applies only if the **Mode** is *Alias Pattern Match*. The VCS has a set of predefined pattern matching variables that can be used to match against certain configuration elements.
Pattern behavior	Determines whether the matched part of the alias is modified before being sent to the target zone or policy service *Leave*: the alias is not modified. *Strip*: the matching prefix or suffix is removed from the alias. *Replace*: the matching part of the alias is substituted with the text in the **Replace string**.	Applies only if the **Mode** is *Alias Pattern Match*. If you want to transform the alias before applying search rules you must use pre-search transforms.
Replace string	The string to substitute for the part of the alias that matches the pattern.	Only applies if the **Pattern behavior** is *Replace*. You can use regular expressions.
On successful match	Controls the ongoing search behavior if the alias matches the search rule. *Continue*: continue applying the remaining search rules (in priority order) until the endpoint identified by the alias is found. *Stop*: do not apply any more search rules, even if the endpoint identified by the alias is not found in the target zone.	If *Stop* is selected, any rules with the same priority level as this rule are still applied.
Target	The zone or policy service to query if the alias matches the search rule.	You can configure external policy services to use as a target of search rules. This could be used, for example, to call out to an external service or application, such as a TelePresence Conductor. The service will return some CPL which could, for example, specify a new destination alias which would start the search process over again.
State	Indicates if the search rule is enabled or not.	Use this setting to test configuration changes, or to temporarily disable certain rules. Any disabled rules still appear in the rules list but are ignored.

Click on the rule you want to configure (or click **New** to create a new rule, or click **Delete** to remove a rule).

Useful tools to assist in configuring search rules

- You can test whether the VCS can find an endpoint identified by a given alias, without actually placing a call to that endpoint, by using the Locate tool (**Maintenance > Tools > Locate**).
- You can test whether a pattern matches a particular alias and is transformed in the expected way by using the Check pattern tool (**Maintenance > Tools > Check pattern**).

Example searches and transforms

You can use pre-search transforms and search rules separately or together. You can also define multiple search rules that use a combination of **Any alias** and **Alias pattern match** modes, and apply the same or different priorities to each rule. This will give you a great deal of flexibility in determining if and when a target zone is queried and whether any transforms are applied.

This section gives the following examples that demonstrate how you might use pre-search transforms and search rules to solve specific use cases in your deployment:

- Filter queries to a zone using the original alias
- Always query a zone using the original alias
- Always query a zone using a transformed alias
- Query a zone using both the original and transformed alias
- Query a zone using two or more different transformed aliases
- Stripping the domain from an alias to allow dialing from SIP to H.323 numbers
- Stripping the domain from an alias to allow dialing from SIP to H.323 IDs
- Allow calls to IP addresses only if they come from known zones

Filter queries to a zone without transforming

You can filter the search requests sent to a zone so that it is only queried for aliases that match certain criteria. For example, assume all endpoints in your regional sales office are registered to their local Cisco VCS with a suffix of `@sales.example.com`. In this situation, it makes sense for your Head Office VCS to query the Sales Office VCS only when it receives a search request for an alias with a suffix of `@sales.example.com`. Sending any other search requests to this particular VCS would take up resources unnecessarily. It would also be wasteful of resources to send search requests for aliases that match this pattern to any other zone (there may be other lower priority search rules defined that would also apply to these aliases). In which case setting **On successful match** to *Stop* means that the VCS will not apply any further (lower priority) search rules.

To achieve the example described above, on your Head Office VCS create a zone to represent the Sales Office VCS, and from the **Create search rule** page (**Configuration > Dial plan > Search rules > New**) set up an associated search rule as follows:

Field	Value
Rule name	Regional sales office
Description	Calls to aliases with a suffix of @sales.example.com
Priority	100
Source	Any
Request must be authenticated	No
Mode	Alias pattern match
Pattern type	Suffix
Pattern string	@sales.example.com

Field	Value
Pattern behavior	Leave
On successful match	Stop
Target	Sales office
State	Enabled

Always query a zone with original alias (no transforms)

To configure a zone so that it is always sent search requests using the original alias, from the **Create search rule** page (**Configuration > Dial plan > Search rules > New**), set up a search rule for that zone with a **Mode** of *Any alias*:

Field	Value
Rule name	Always query with original alias
Description	Send search requests using the original alias
Priority	100
Source	Any
Request must be authenticated	No
Mode	Any alias
On successful match	Continue
Target	Head office
State	Enabled

Query a zone for a transformed alias

Note that the *Any alias* mode does not support alias transforms. If you want to always query a zone using a different alias to that received, you need to use a mode of *Alias pattern match* in combination with a regular expression.

You may want to configure your dial plan so that when a user dials an alias in the format `name@example.com` the VCS queries the zone for `name@example.co.uk` instead.

To achieve this, from the **Create search rule** page (**Configuration > Dial plan > Search rules > New**) set up a search rule as follows:

Field	Value
Rule name	Transform to example.co.uk
Description	Transform example.com to example.co.uk
Priority	100
Source	Any

Field	Value
Request must be authenticated	No
Mode	Alias pattern match
Pattern type	Suffix
Pattern string	example.com
Pattern behavior	Replace
Replace string	example.co.uk
On successful match	Continue
Target zone	Head office
State	Enabled

Query a zone for original and transformed alias

You may want to query a zone for the original alias at the same time as you query it for a transformed alias. To do this, configure one search rule with a **Mode** of *Any alias*, and a second search rule with a **Mode** of *Alias pattern match* along with details of the transform to be applied. Both searches must be given the same **Priority** level.

For example, you may want to query a neighbor zone for both a full URI and just the name (the URI with the domain removed). To achieve this, on your local VCS from the **Create search rule** page (**Configuration > Dial plan > Search rules > New**) set up two search rules as follows:

Rule #1

Field	Value
Rule name	Overseas office - original alias
Description	Query overseas office with the original alias
Priority	100
Source	Any
Request must be authenticated	No
Mode	Any alias
On successful match	Continue
Target zone	Overseas office
State	Enabled

Rule #2

Field	Value
Rule name	Overseas office - strip domain
Description	Query overseas office with domain removed

Field	Value
Priority	100
Source	Any
Request must be authenticated	No
Mode	Alias pattern match
Pattern type	Suffix
Pattern string	@example.com
Pattern behavior	Strip
On successful match	Continue
Target zone	Overseas office
State	Enabled

Query a zone for two or more transformed aliases

Zones are queried in order of priority of the search rules configured against them.

It is possible to configure multiple search rules for the same zone each with, for example, the same **Priority** and an identical **Pattern string** to be matched, but with different replacement patterns. In this situation, the VCS queries that zone for each of the new aliases simultaneously. (Any duplicate aliases produced by the transforms are removed prior to the search requests being sent out.) If any of the new aliases are found by that zone, the call is forwarded to the zone. It is then up to the controlling system to determine the alias to which the call will be forwarded.

For example, you may want to configure your dial plan so that when a user dials an alias in the format **`name@example.com`**. the VCS queries the zone simultaneously for both **`name@example.co.uk`** and **`name@example.net`**.

To achieve this, from the **Create search rule** page (**Configuration > Dial plan > Search rules > New**) set up two search rules as follows:

Rule #1

Field	Value
Rule name	Transform to example.co.uk
Description	Transform example.com to example.co.uk
Priority	100
Source	Any
Request must be authenticated	No
Mode	Alias pattern match
Pattern type	Suffix
Pattern string	example.com

Field	Value
Pattern behavior	Replace
Replace string	example.co.uk
On successful match	Continue
Target zone	Head office
State	Enabled

Rule #2

Field	Value
Rule name	Transform to example.net
Description	Transform example.com to example.net
Priority	100
Source	Any
Request must be authenticated	No
Mode	Alias pattern match
Pattern type	Suffix
Pattern string	example.com
Pattern behavior	Replace
Replace string	example.net
On successful match	Continue
Target zone	Head office
State	Enabled

Stripping @domain for dialing to H.323 numbers

SIP endpoints can only make calls in the form of URIs - for example **`name@domain`**. If the caller does not specify a domain when placing the call, the SIP endpoint automatically appends its own domain to the number that is dialed. So if you dial **`123`** from a SIP endpoint, the search will be placed for **`123@domain`**. If the H.323 endpoint being dialed is registered as **`123`**, the VCS will be unable to locate the alias **`123@domain`** and the call will fail.

If you have a deployment that includes both SIP and H.323 endpoints that register using a number, you will need to set up the following pre-search transform and local zone search rules. Together these will let users place calls from both SIP and H.323 endpoints to H.323 endpoints registered using their H.323 E.164 number only.

Pre-search transform

On the **Create transforms** page (**Configuration > Dial plan > Transforms > New**):

Field	Value
Priority	1
Description	Take any number-only dial string and append @domain
Pattern type	Regex
Pattern string	(\d+)
Pattern behavior	Replace
Replace string	\1@domain
State	Enabled

This pre-search transform takes any number-only dial string (such as `123`) and appends the domain used in endpoint AORs and URIs in your deployment. This ensures that calls made by SIP and H.323 endpoints result in the same URI.

Local zone search rules

On the **Create search rule** page (**Configuration > Dial plan > Search rules > New**), create two new search rules as follows:

Rule #1

Field	Value
Rule name	Dialing H.323 numbers
Description	Transform aliases in format number@domain to number
Priority	50
Source	Any
Request must be authenticated	No
Mode	Alias pattern match
Pattern type	Regex
Pattern string	(\d+)@domain
Pattern behavior	Replace
Replace string	\1
On successful match	Continue
Target zone	Local Zone
State	Enabled

Rule #2

Field	Value
Rule name	Dialing H.323 numbers
Description	Place calls to number@domain with no alias transform

Field	Value
Priority	60
Source	Any
Request must be authenticated	No
Mode	Alias pattern match
Pattern type	Regex
Pattern string	(\d+)@domain
Pattern behavior	Leave
On successful match	Continue
Target zone	Local Zone
State	Enabled

These search rules ensure that both the E.164 number and full URI are searched for, so that endpoints can still be reached whether they have registered with an H.323 number (**123**) or a full URI (**123@domain**).

- The first search rule takes any aliases in the format **number@domain** and transforms them into the format **number**.
- To ensure that any endpoints that have actually registered with an alias in the format **number@domain** can also still be reached, the lower-priority second search rule places calls to **number@domain** without transforming the alias.

Transforms for alphanumeric H.323 ID dial strings

This example builds on the Stripping @domain for dialing to H.323 numbers example. That example caters for number-only dial strings, however H.323 IDs do not have to be purely numeric; they can contain alphanumeric (letters and digits) characters.

This example follows the same model as the example mentioned above — a pre-search transform and two local zone search rules to ensure that endpoints can be reached whether they have registered with an H.323 ID or a full URI — but uses a different regex (regular expression) that supports alphanumeric characters.

Pre-search transform

On the **Create transforms** page (**Configuration > Dial plan > Transforms > New**):

Field	Value
Priority	1
Description	Append @domain to any alphanumeric dial string
Pattern type	Regex
Pattern string	([^@]*)
Pattern behavior	Replace
Replace string	\1@domain
State	Enabled

This pre-search transform takes any alphanumeric dial string (such as **123abc**) and appends the domain used in your deployment to ensure that calls made by SIP and H.323 endpoints result in the same URI.

Local zone search rules

On the **Create search rule** page (**Configuration > Dial plan > Search rules > New**), create two new search rules as follows:

Rule #1

Field	Value
Rule name	Dialing H.323 strings
Description	Transform aliases in format string@domain to string
Priority	40
Source	Any
Request must be authenticated	No
Mode	Alias pattern match
Pattern type	Regex
Pattern string	(.+)@domain
Pattern behavior	Replace
Replace string	\1
On successful match	Continue
Target zone	Local Zone
State	Enabled

Rule #2

Field	Value
Rule name	Dialing H.323 strings with domain
Description	Place calls to string@domain with no alias transform
Priority	50
Source	Any
Request must be authenticated	No
Mode	Alias pattern match
Pattern type	Regex
Pattern string	(.+)@domain
Pattern behavior	Leave
On successful match	Continue
Target zone	Local Zone
State	Enabled

These search rules ensure that both the E.164 number and full URI are searched for, so that endpoints can still be reached whether they have registered with an H.323 ID (**123abc**) or a full URI (**123abc@domain**).

- The first search rule takes any aliases in the format **string@domain** and transforms them into the format **string**.
- To ensure that any endpoints that have actually registered with an alias in the format **string@domain** can also still be reached, the lower-priority second search rule places calls to **string@domain** without transforming the alias.

Allowing calls to IP addresses only if they come from known zones

In addition to making calls to aliases, calls can be made to specified IP addresses. To pass on such calls to the appropriate target zones you must set up search rules with a **Mode** of *Any IP address*. To provide extra security you can set the rule's **Source** option to *All zones*. This means that the query is only sent to the target zone if it originated from any configured zone or the Local Zone.

To achieve the example described above, from the **Create search rule** page (**Configuration > Dial plan > Search rules > New**) set up a search rule as follows:

Field	Value
Rule name	IP addresses from known zones
Description	Allow calls to IP addresses only from a known zone
Priority	100
Source	All zones
Request must be authenticated	No
Mode	Any IP address
On successful match	Continue
Target zone	Overseas office
State	Enabled

Configuring search rules to use an external service

The configuration process to set up the VCS to use an external policy service for search rules (dial plan) is broken down into the following steps:

- Configure the policy service to be used by search rules.
- Configure the relevant search rules to direct a search to the policy service.

Configuring a policy service to be used by search rules

1. Go to **Configuration > Dial plan > Policy services**.
2. Click **New**.
3. Configure the fields on the **Create policy service** page as follows:

Field	Description	Usage tips
Name	The name of the policy service.	
Description	An optional free-form description of the policy service.	The description appears as a tooltip if you hover your mouse pointer over a policy service in the list.
Protocol	The protocol used to connect to the policy service. The default is *HTTPS*.	The VCS automatically supports HTTP to HTTPS redirection when communicating with the policy service server.
Certificate verification mode	When connecting over HTTPS, this setting controls whether the certificate presented by the policy server is verified. If *On*, for the VCS to connect to a policy server over HTTPS, the VCS must have a root CA certificate loaded that authorizes that server's server certificate. Also the certificate's Subject Common Name or Subject Alternative Name must match one of the **Server address** fields below.	The VCS's root CA certificates are loaded via (**Maintenance > Security certificates > Trusted CA certificate**).
HTTPS certificate revocation list (CRL) checking	Enable this option if you want to protect certificate checking using CRLs and you have manually loaded CRL files, or you have enabled automatic CRL updates.	Go to **Maintenance > Security certificates > CRL management** to configure how the VCS uploads CRL files.
Server address 1 - 3	Enter the IP address or Fully Qualified Domain Name (FQDN) of the server hosting the service. You can specify a port by appending `:<port>` to the address.	If an FQDN is specified, ensure that the VCS has an appropriate DNS configuration that allows the FQDN to be resolved. For resiliency, up to three server addresses can be supplied.
Path	Enter the URL of the service on the server.	

Field	Description	Usage tips
Status path	The **Status path** identifies the path from where the VCS can obtain the status of the remote service. The default is *status*.	The policy server must supply return status information, see Policy server status and resiliency [p.363].
Username	The username used by the VCS to log in and query the service.	
Password	The password used by the VCS to log in and query the service.	The maximum plaintext length is 30 characters (which is subsequently encrypted).
Default CPL	This is the fallback CPL used by the VCS if the service is not available.	You can change it, for example, to redirect to an answer service or recorded message. For more information, see Default CPL for policy services [p.519].

4. Click **Create policy service**.

Configuring a search rule to direct a search to the policy service

1. Go to **Configuration > Dial plan > Search rules**.
2. Click **New**.
3. Configure the fields on the **Create search rule** page as appropriate for the searches you want to direct to the external policy server.
   This example shows how to divert calls to aliases ending in .meet to the external policy server:

Rule name	A short name that describes the rule.
Description	A free-form description of the rule.
Priority	As required, for example 10.
Protocol	As required, for example *Any*.
Source	As required, for example *Any*.
Request must be authenticated	Configure this setting according to your authentication policy.
Mode	As required, for example *Alias pattern match*.
Pattern type	As required, for example *Regex*.
Pattern string	As required, for example.*\.meet@example.com
Pattern behavior	As required, for example *Leave*.
On successful match	As required. Note that if *Stop* is selected the VCS will not process any further search rules for the original alias, but will restart the full call processing sequence if any new aliases are returned in the CPL.
Target	Select the policy service that was created in the previous step.

State	*Enabled*

To divert all searches to the policy server you could set up 2 search rules that both target the policy service:

- The first search rule with a **Mode** of *Any alias*.
- The second search rule with a **Mode** of *Any IP address*.

4. Click **Create search rule**.

The VCS will direct all searches that match the specified pattern to the policy service server.

Your search rules must be configured in such a way that they will result in a match for the initial alias, and then either not match or not return a reject for any aliases to which the policy server has routed the call.

About Call Policy

You can set up rules to control which calls are allowed, which calls are rejected, and which calls are to be redirected to a different destination. These rules are known as Call Policy (or Administrator Policy).

If Call Policy is enabled and has been configured, each time a call is made the VCS will execute the policy in order to decide, based on the source and destination of the call, whether to:

- proxy the call to its original destination
- redirect the call to a different destination or set of destinations
- reject the call

Note: when enabled, Call Policy is executed for all calls going through the VCS.

You should:

- use Call Policy to determine which callers can make or receive calls via the VCS
- use Registration restriction policy to determine which aliases can or cannot register with the VCS

Configuring Call Policy

The **Call Policy configuration** page (**Configuration > Call Policy> Configuration**) is used to configure the VCS's Call Policy mode and to upload local policy files.

Call Policy mode

The **Call Policy mode** controls from where the VCS obtains its Call Policy configuration. The options are:

- *Local CPL*: uses locally-defined Call Policy.
- *Policy service*: uses an external policy service.
- *Off*: Call Policy is not in use.

Each of these options are described in more detail below:

Local CPL

The *Local CPL* option uses the Call Policy that is configured locally on the VCS. If you choose *Local CPL* you must then either:

- configure basic Call Policy through the **Call Policy rules** page (**Configuration > Call Policy > Rules**) — note that this only lets you allow or reject specified calls, or
- upload a Call Policy file that contains CPL script; however, due to the complexity of writing CPL scripts you are recommended to use an external policy service instead

Only one of these two methods can be used at any one time to specify Call Policy. If a CPL script has been uploaded, this takes precedence and you will not be able to use the **Call Policy rules** page; to use the page you must first delete the CPL script that has been uploaded.

If *Local CPL* is enabled but no policy is configured or uploaded, then a default policy is applied that allows all calls, regardless of source or destination.

The *Policy service* option is used if you want to refer all Call Policy decisions out to an external service. If you select this option an extra set of configuration fields appear so that you can specify the connection details of the external service. See Configuring Call Policy to use an external service [p.221] .

Configuring Call Policy rules using the web interface

The **Call Policy rules** page (**Configuration > Call Policy > Rules**) lists the web-configured (rather than uploaded via a CPL file) Call Policy rules currently in place and allows you to create, edit and delete rules. It provides a mechanism to set up basic Call Policy rules without having to write and upload a CPL script.

You cannot use the Call Policy rules page to configure Call Policy if a CPL file is already in place. If this is the case, on the **Call Policy configuration** page (**Configuration > Call Policy > Configuration**) you will have the option to **Delete uploaded file**. Doing so will delete the existing Call Policy that was put in place using a CPL script, and enable use of the **Call Policy rules** page for Call Policy configuration.

Each rule specifies the **Action** to take for all calls from a particular **Source** alias to a particular **Destination** alias. If you have more than one rule, you can **Rearrange** the order of priority in which these rules are applied.

If rules are not configured, the default policy is to allow all calls, regardless of source or destination.

The configurable options are:

Field	Description	Usage tips
Source pattern	The alias or IP address that the calling endpoint used to identify itself when placing the call. If this field is blank, the policy rule applies to all incoming calls from unauthenticated users, meaning calls where the endpoint making the call is **not** either: ■ locally registered and authenticated with the VCS, or ■ registered and authenticated to a neighbor which in turn has authenticated with the local VCS	See About device authentication [p.127] for more information. This field supports regular expressions.
Destination pattern	The alias or IP address that the endpoint dialed to make the call.	This field supports regular expressions.
Action	Whether or not a call that matches the source and destination is permitted. *Allow*: if both the **Source** and **Destination** aliases match those listed, call processing will continue. *Reject*: if both the **Source** and **Destination** aliases match those listed, the call will be rejected.	
Rearrange	Each combination of **Source** and **Destination** is compared, in the order shown on the **Call Policy rules** page, with the details of the call being made until a match is found, at which point the call policy is applied. To move a particular item to higher or lower in the list, thus giving the rule a higher or lower priority, click on the ⬆ and ⬇ icons respectively.	

Click on the rule you want to configure (or click **New** to create a new rule, or click **Delete** to remove a rule).

Configuring Call Policy using a CPL script

You can use CPL scripts to configure advanced Call Policy. To do this, you must first create and save the CPL script as a text file, after which you upload it to the VCS. However, due to the complexity of writing CPL

scripts you are recommended to use an external policy service instead.

For information on the CPL syntax and commands that are supported by the VCS, see the CPL reference [p.391] section.

Viewing existing CPL script

To view the Call Policy that is currently in place as an XML-based CPL script, go to the Call Policy configuration page (**Configuration > Call Policy > Configuration**) and click **Show Call Policy file**.

- If Call Policy is configured to use a CPL script, this shows you the script that was uploaded.
- If Call Policy is configured by the **Call Policy rules** page, this shows you the CPL version of those call policy rules.
- If **Call Policy mode** is *On* but a policy has not been configured, this shows you a default CPL script that allows all calls.

You may want to view the file to take a backup copy of the Call Policy, or, if Call Policy has been configured using the Call Policy rules page you could take a copy of this CPL file to use as a starting point for a more advanced CPL script.

If Call Policy has been configured using the **Call Policy rules** page and you download the CPL file and then upload it back to the VCS without editing it, the VCS will recognize the file and automatically add each rule back into the **Call Policy rules** page.

About CPL XSD files

The CPL script must be in a format supported by the VCS. The **Call Policy configuration** page allows you to download the XML schemas which are used to check scripts that are uploaded to the VCS. You can use the XSD files to check in advance that your CPL script is valid. Two download options are available:

- **Show CPL XSD file**: displays in your browser the XML schema used for the CPL script.
- **Show CPL Extensions XSD file**: displays in your browser the XML schema used for additional CPL elements supported by the VCS.

Uploading a CPL script

To upload a new CPL file:

1. Go to **Configuration > Call Policy > Configuration**.
2. From the **Policy files** section, in the **Select the new Call Policy file** field, enter the file name or **Browse** to the CPL script you want upload.
3. Click **Upload file**.

The VCS polls for CPL script changes every 5 seconds, so the VCS will almost immediately start using the updated CPL script. CPL scripts cannot be uploaded using the command line interface.

Deleting an existing CPL script

If a CPL script has already been uploaded, a **Delete uploaded file** button will be visible. Click it to delete the file.

Configuring Call Policy to use an external service

To configure Call Policy to refer all policy decisions out to an external service:

1. Go to **Configuration > Call policy > Configuration**.
2. Select a **Call Policy mode** of *Policy service*.
3. Configure the fields that are presented as follows:

Field	Description	Usage tips
Protocol	The protocol used to connect to the policy service. The default is *HTTPS*.	The VCS automatically supports HTTP to HTTPS redirection when communicating with the policy service server.
Certificate verification mode	When connecting over HTTPS, this setting controls whether the certificate presented by the policy server is verified. If *On*, for the VCS to connect to a policy server over HTTPS, the VCS must have a root CA certificate loaded that authorizes that server's server certificate. Also the certificate's Subject Common Name or Subject Alternative Name must match one of the **Server address** fields below.	The VCS's root CA certificates are loaded via (**Maintenance > Security certificates > Trusted CA certificate**).
HTTPS certificate revocation list (CRL) checking	Enable this option if you want to protect certificate checking using CRLs and you have manually loaded CRL files, or you have enabled automatic CRL updates.	Go to **Maintenance > Security certificates > CRL management** to configure how the VCS uploads CRL files.
Server address 1 - 3	Enter the IP address or Fully Qualified Domain Name (FQDN) of the server hosting the service. You can specify a port by appending `:<port>` to the address.	If an FQDN is specified, ensure that the VCS has an appropriate DNS configuration that allows the FQDN to be resolved. For resiliency, up to three server addresses can be supplied.
Path	Enter the URL of the service on the server.	
Status path	The **Status path** identifies the path from where the VCS can obtain the status of the remote service. The default is *status*.	The policy server must supply return status information, see Policy server status and resiliency [p.363].
Username	The username used by the VCS to log in and query the service.	
Password	The password used by the VCS to log in and query the service.	The maximum plaintext length is 30 characters (which is subsequently encrypted).

Field	Description	Usage tips
Default CPL	This is the fallback CPL used by the VCS if the service is not available.	You can change it, for example, to redirect to an answer service or recorded message. For more information, see Default CPL for policy services [p.519].

4. Click **Save**.
   The VCS should connect to the policy service server and start using the service for Call Policy decisions. Any connection problems will be reported on this page. Check the **Status** area at the bottom of the page and check for additional information messages against the **Server address** fields.

Supported address formats

The destination address that is entered using the caller's endpoint can take a number of different formats, and this affects the specific process that the VCS follows when attempting to locate the destination endpoint. The address formats supported by the VCS are:

- IP address, for example **10.44.10.1** or **3ffe:80ee:3706::10:35**
- H.323 ID, for example **john.smith** or **john.smith@example.com** (note that an H.323 ID can be in the form of a URI)
- E.164 alias, for example **441189876432** or **6432**
- URI, for example **john.smith@example.com**
- ENUM, for example **441189876432** or **6432**

Each of these address formats may require some configuration of the VCS in order for them to be supported. These configuration requirements are described below.

Dialing by IP address

Dialing by IP address is necessary when the destination endpoint is not registered with any system (such as a VCS or other gatekeeper). See the Dialing by IP address [p.225] section for more information.

Endpoints registered to a VCS Expressway

Calls made by dialing the IP address of an H.323 endpoint registered directly with a VCS Expressway are forced to route through the VCS Expressway. The call will therefore be subject to any restrictions configured on that system.

Dialing by H.323 ID or E.164 alias

No special configuration is required to place a call using an H.323 ID or E.164 alias.

The VCS follows the usual call routing process, applying any transforms and then searching the Local Zone and external zones for the alias, according to the search rules.

Note that SIP endpoints always register using an AOR in the form of a URI. You are recommended to ensure that H.323 endpoints also register with an H.323 ID in the form of a URI to facilitate interworking.

Dialing by H.323 or SIP URI

When a user places a call using URI dialing, they will typically dial **name@example.com**.

If the destination endpoint is locally registered or registered to a neighbor system, no special configuration is required for the call to be placed. The VCS follows the usual search process, applying any transforms and then searching the Local Zone and external zones for the alias, according to the search rules.

If the destination endpoint is not locally registered, URI dialing may make use of DNS to locate the destination endpoint. To support URI dialing via DNS, you must configure the VCS with at least one DNS server and at least one DNS zone.

Full instructions on how to configure the VCS to support URI dialing via DNS (both outbound and inbound) are given in the URI dialing section.

Dialing by ENUM

ENUM dialing allows an endpoint to be contacted by a caller dialing an E.164 number - a telephone number - even if that endpoint has registered using a different format of alias. The E.164 number is converted into a URI by the DNS system, and the rules for URI dialing are then followed to place the call.

The ENUM dialing facility allows you to retain the flexibility of URI dialing while having the simplicity of being called using just a number - particularly important if any of your callers are restricted to dialing using a numeric keypad.

To support ENUM dialing on the VCS you must configure it with at least one DNS server and the appropriate ENUM zones.

Full instructions on how to configure the VCS to support ENUM dialing (both outbound and inbound) are given in the ENUM dialing section.

Dialing by IP address

Dialing by IP address is necessary when the destination endpoint is not registered with any system.

If the destination endpoint is registered, it may be possible to call it using its IP address but the call may not succeed if the endpoint is on a private network or behind a firewall. For this reason you are recommended to place calls to registered endpoints via other address formats, such as its AOR or H.323 ID. Similarly, callers outside of your network should not try to contact endpoints within your network via their IP addresses.

Calls to unknown IP addresses

Although the VCS supports dialing by IP address, it is sometimes undesirable for the VCS to be allowed to place a call directly to an IP address that is not local. Instead, you may want a neighbor to place the call on behalf of the VCS, or not allow such calls at all. The **Calls to unknown IP addresses** setting (on the **Dial plan configuration** page) configures how the VCS handles calls made to IP addresses which are not on its local network, or registered with it or one of its neighbors.

The VCS considers an IP address to be "known" if it either:

- is the IP address of a locally registered endpoint
- falls within the IP address range of one of the subzone membership rules configured on the VCS

The VCS will always attempt to place calls to known IP addresses (providing there is a search rule for *Any IP Address* against the Local Zone).

All other IP addresses are considered to be "unknown" and are handled by the VCS according to the **Calls to Unknown IP addresses** setting:

- *Direct*: the VCS attempts to place the call directly to the unknown IP address without querying any neighbors.
- *Indirect*: the VCS forwards the search request to its neighbors in accordance with its normal search process, meaning any zones that are the target of search rules with an *Any IP Address* mode. If a match is found and the neighbor's configuration allows it to connect a call to that IP address, the VCS will pass the call to that neighbor for completion.
- *Off*: the VCS will not attempt to place the call, either directly or indirectly to any of its neighbors.

The default setting is *Indirect*.

This setting applies to the call's destination address prior to any zone transforms, but after any pre-search transforms, Call Policy or User Policy rules have been applied.

Note that in addition to controlling calls, this setting also determines the behavior of provisioning and presence messages to SIP devices, as these messages are routed to IP addresses.

Calling unregistered endpoints

An unregistered endpoint is any device that is not registered with an H.323 gatekeeper or SIP registrar. Although most calls are made between endpoints that are registered with such systems, it is sometimes necessary to place a call to an unregistered endpoint.

There are two ways to call to an unregistered endpoint:

- by dialing its URI (this requires that the local VCS is configured to support URI dialing, and a DNS record exists for that URI that resolves to the unregistered endpoint's IP address)
- by dialing its IP address

Recommended configuration for firewall traversal

When a VCS Expressway is neighbored with a VCS Control for firewall traversal, you should typically set **Calls to unknown IP addresses** to *Indirect* on the VCS Control and *Direct* on the VCS Expressway. When a caller inside the firewall attempts to place a call to an IP address outside the firewall, it will be routed as follows:

1. The call will go from the endpoint to the VCS Control with which it is registered.
2. As the IP address being called is not registered to that VCS, and its **Calls to unknown IP addresses** setting is *Indirect*, the VCS will not place the call directly. Instead, it will query its neighbor VCS Expressway to see if that system is able to place the call on the VCS Control's behalf. Note that you need to configure a search rule for *Any IP Address* against the traversal server zone.
3. The VCS Expressway receives the call and because its **Calls to unknown IP addresses** setting is *Direct*, it will make the call directly to the called IP address.

About URI dialing

A URI address typically takes the form **name@example.com**, where **name** is the alias and **example.com** is the domain.

URI dialing can make use of DNS to enable endpoints registered with different systems to locate and call each other. Without DNS, the endpoints would need to be registered to the same or neighbored systems in order to locate each other.

URI dialing without DNS

Without the use of DNS, calls made by a locally registered endpoint using URI dialing will be placed only if the destination endpoint is also locally registered, or is accessible via a neighbor system. This is because these endpoints would be located using the search and zone transform process, rather than a DNS query.

If you want to use URI dialing from your network without the use of DNS, you would need to ensure that all the systems in your network were connected to each other by neighbor relationships - either directly or indirectly. This would ensure that any one system could locate an endpoint registered to itself or any another system, by searching for the endpoint's URI.

This does not scale well as the number of systems grows. It is also not particularly practical, as it means that endpoints within your network will not be able to dial endpoints registered to systems outside your network (for example when placing calls to another company) if there is not already a neighbor relationship between the two systems.

If a DNS zone and a DNS server have not been configured on the local VCS, calls to endpoints that are not registered locally or to a neighbor system could still be placed if the local VCS is neighbored (either directly or indirectly) with another VCS that has been configured for URI dialing via DNS. In this case, any URI-dialed calls that are picked up by search rules that refer to that neighbor zone will go via that neighbor, which will perform the DNS lookup.

This configuration is useful if you want all URI dialing to be made via one particular system, such as a VCS Expressway.

If you do not want to use DNS as part of URI dialing within your network, then no special configuration is required. Endpoints will register with an alias in the form of a URI, and when calls are placed to that URI the VCS will query its local zone and neighbors for that URI.

If the VCS does not have DNS configured and your network includes H.323 endpoints, then in order for these endpoints to be reachable using URI dialing either:

- the H.323 endpoints should register with the VCS using an address in the format of a URI
- an appropriate transform should be written to convert URIs into the format used by the H.323 registrations. An example would be a deployment where H.323 endpoints register with an **alias**, and incoming calls are made to **alias@domain.com**. A local transform is then configured to strip the **@domain**, and the search is made locally for **alias**. See Stripping @domain for dialing to H.323 numbers [p.210] for an example of how to do this.

SIP endpoints always register with an AOR in the form of a URI, so no special configuration is required.

URI dialing via DNS

By using DNS as part of URI dialing, it is possible to find an endpoint even though it may be registered to an unknown system. The VCS uses a DNS lookup to locate the domain in the URI address and then queries that domain for the alias. See the URI resolution process using DNS [p.228] section for more information.

URI dialing via DNS is enabled separately for outgoing and incoming calls.

Outgoing calls

To enable your VCS to locate endpoints using URI dialing via DNS, you must:

- configure at least one DNS zone and an associated search rule
- configure at least one DNS server

This is described in the URI dialing via DNS for outgoing calls [p.229] section.

Incoming calls

To enable endpoints registered to your VCS to receive calls from non-locally registered endpoints using URI dialing via DNS, you must:

- ensure all endpoints are registered with an AOR (SIP) or H.323 ID in the form of a URI
- configure appropriate DNS records, depending on the protocols and transport types you want to use

This is described in the URI dialing via DNS for incoming calls [p.231] section.

Firewall traversal calls

To configure your system so that you can place and receive calls using URI dialing through a firewall, see the URI dialing and firewall traversal [p.233] section.

URI resolution process using DNS

When the VCS attempts to locate a destination URI address using the DNS system, the general process is as follows:

H.323

1. The VCS sends a query to its DNS server for an SRV record for the domain in the URI. (If more than one DNS server has been configured on the VCS, the query will be sent to all servers at the same time, and all responses will be prioritized by the VCS with only the most relevant SRV record being used.) If available, this SRV record returns information (such as the FQDN and listening port) about either the device itself or the authoritative H.323 gatekeeper for that domain.
   - If the domain part of the URI address was resolved successfully using an H.323 Location SRV record (that is, for _h323ls) then the VCS will send an A/AAAA record query for each name record returned. These will resolve to one or more IP addresses, and the VCS then sends, in priority order, an LRQ for the full URI to those IP addresses.
   - If the domain part of the URI address was resolved using an H.323 Call Signaling SRV record (that is, for _h323cs) then the VCS will send an A/AAAA record query for each name record returned. These will resolve to one or more IP addresses, and the VCS then routes the call, in priority order to the IP addresses returned in those records. (An exception to this is where the original dial string has a port specified - for example, **`user@example.com:1719`** - in which case the address returned is queried via an LRQ for the full URI address.)

2. If a relevant SRV record cannot be located:
   - If the **Include address record** setting for the DNS zone being queried is set to *On*, the system will fall back to looking for an A or AAAA record for the domain in the URI. If such a record is found, the call will be routed to that IP address and the search will terminate. Note that if the A and AAAA records that are found at this domain are for systems other than those that support SIP or H.323, the VCS will still forward the call to this zone, and the call will therefore fail. For this reason, you are recommended to use the default setting of *Off*.
   - If the **Include address record** setting for the DNS zone being queried is set to *Off*, the VCS will not query for A and AAAA records and instead will continue with the search, querying the remaining lower priority zones.

SIP

The VCS supports the SIP resolution process as outlined in *RFC 3263*. An example of how the VCS implements this process is as follows:

1. The VCS sends a NAPTR query for the domain in the URI. If available, the result set of this query describes a prioritized list of SRV records and transport protocols that should be used to contact that domain.
   If no NAPTR records are present in DNS for this domain name then the VCS will use a default list of **`_sips._tcp.<domain>`**, **`_sip._tcp.<domain>`** and **`_sip._udp.<domain>`** for that domain as if they had been returned from the NAPTR query.
   - The VCS sends SRV queries for each result returned from the NAPTR record lookup. A prioritized list of A/AAAA records returned is built.
   - The VCS sends an A/AAAA record query for each name record returned by the SRV record lookup.

   The above steps will result in a tree of IP addresses, port and transport protocols to be used to contact the target domain. The tree is sub-divided by NAPTR record priority and then by SRV record priority. When the tree of locations is used, the searching process will stop on the first location to return a response that indicates that the target destination has been contacted.

2. If the search process does not return a relevant SRV record:
   - If the **Include address record** setting for the DNS zone being queried is set to *On*, the system will fall back to looking for an A or AAAA record for the domain in the URI. If such a record is found, the call will be routed to that IP address and the search will terminate. Note that if the A and AAAA records that are found at this domain are for systems other than those that support SIP or H.323, the VCS will still forward the call to this zone, and the call will therefore fail. For this reason, you are recommended to use the default setting of *Off*.
   - If the **Include address record** setting for the DNS zone being queried is set to *Off*, the VCS will not query for A and AAAA records and instead will continue with the search, querying the remaining lower priority zones.

URI dialing via DNS for outgoing calls

When a user places a call using URI dialing, they will typically dial an address in the form **`name@example.com`** from their endpoint. Below is the process that is followed when a URI address is dialed from an endpoint registered with your VCS, or received as a query from a neighbor system:

1. The VCS checks its search rules to see if any of them are configured with a **Mode** of either:
   - *Any alias*, or
   - *Alias pattern match* with a pattern that matches the URI address

2. The associated target zones are queried, in rule priority order, for the URI.
   - If one of the target zones is a DNS zone, the VCS attempts to locate the endpoint through a DNS lookup. It does this by querying the DNS server configured on the VCS for the location of the domain as per the URI resolution process via DNS. If the domain part of the URI address is resolved successfully the request is forwarded to those addresses.
   - If one of the target zones is a neighbor, traversal client or traversal server zones, those zones are queried for the URI. If that system supports URI dialing via DNS, it may route the call itself.

Adding and configuring DNS zones

To enable URI dialing via DNS, you must configure at least one DNS zone. To do this:

1. Go to **Configuration > Zones > Zones**.
2. Click **New**. You are taken to the **Create zone** page.
3. Enter a **Name** for the zone and select a **Type** of *DNS*.
4. Configure the DNS zone settings as follows:

Field	Guidelines
Hop count	When dialing by URI via DNS, the hop count used is that configured for the DNS zone associated with the search rule that matches the URI address (if this is lower than the hop count currently assigned to the call). If URI address isn't matched to a DNS zone, the query may be forwarded to a neighbor. In this case, the hop count used will be that configured for the neighbor zone (if this is lower than the hop count currently assigned to the call).
H.323 and **SIP modes**	The H.323 and SIP sections allow you to filter calls to systems and endpoints located via this zone, based on whether the call is located using SIP or H.323 SRV lookups.
Include address record	This setting determines whether, if no NAPTR (SIP) or SRV (SIP and H.323) records have been found for the dialed alias via this zone, the VCS will then query for A and AAAA DNS records before moving on to query lower priority zones. You are recommended to use the default setting of *Off*, meaning that the VCS will not query for A and AAAA records, and instead will continue with the search, querying the remaining lower priority zones. This is because, unlike for NAPTR and SRV records, there is no guarantee that the A/AAAA records will point to a system capable of processing the relevant SIP or H.323 messages (LRQs, Setups, etc.) - the system may instead be a web server that processes http messages, or a mail server that processes mail messages. If this setting is *On*, when a system is found using A/AAAA lookup, the VCS will send the signaling to that destination and will not continue the search process. If the system does not support SIP or H.323, the call will fail.
Zone profile	For most deployments, this option should be left as *Default*.

5. Click **Create zone**.

Configuring search rules for DNS zones

If you want your local VCS to use DNS to locate endpoints outside your network, you must:

- configure the DNS servers used by the VCS for DNS queries
- create a DNS zone and set up associated search rules that use the **Pattern string** and **Pattern type** fields to define the aliases that will trigger a DNS query

For example, rules with:

- a **Pattern string** of *.*@.** and a **Pattern type** of *Regex* will query DNS for all aliases in the form of typical URI addresses
- a **Pattern string** of *(?!.*@example.com$).** and a **Pattern type** of *Regex* will query DNS for all aliases in the form of typical URI addresses except those for the domain *example.com*

To set up further filters, configure extra search rules that target the same DNS zone. You do not need to create new DNS zones for each rule unless you want to filter based on the protocol (SIP or H.323) or use different hop counts.

Note: you are not recommended to configure search rules with a **Mode** of *Any alias* for DNS zones. This will result in DNS always being queried for all aliases, including those that may be locally registered and those that are not in the form of URI addresses.

URI dialing via DNS for incoming calls

DNS record types

The ability of the VCS to receive incoming calls (and other messages, such as registrations) made using URI dialing via DNS relies on the presence of DNS records for each domain the VCS is hosting.

These records can be of various types including:

- A records, which provide the IPv4 address of the VCS
- AAAA records, which provide the IPv6 address of the VCS
- Service (SRV) records, which specify the FQDN of the VCS and the port on it to be queried for a particular protocol and transport type.
- NAPTR records, which specify SRV record and transport preferences for a SIP domain.

You must provide an SRV or NAPTR record for each combination of domain hosted and protocol and transport type enabled on the VCS.

Incoming call process

When an incoming call has been placed using URI dialing via DNS, the VCS will have been located by the calling system using one of the DNS record lookups described above. The VCS will receive the request containing the dialed URI in the form user@example.com. This will appear as coming from the Default Zone. The VCS will then search for the URI in accordance with its normal call routing process, applying any pre-search transforms, Call Policy and FindMe policy, then searching its Local Zone and other configured zones, in order of search rule priority.

SRV record format

The format of SRV records is defined by *RFC 2782* as:

```
_Service._Proto.Name TTL Class SRV Priority Weight Port Target
```

For the VCS, these are as follows:

- **`_Service`** and **`_Proto`** will be different for H.323 and SIP, and will depend on the protocol and transport type being used
- **`Name`** is the domain in the URI that the VCS is hosting (such as **`example.com`**)

- **Port** is the IP port on the VCS that has been configured to listen for that particular service and protocol combination
- **Target** is the FQDN of the VCS.

Configuring H.323 SRV records

Annex O of *ITU Specification: H.323* defines the procedures for using DNS to locate gatekeepers and endpoints and for resolving H.323 URL aliases. It also defines parameters for use with the H.323 URL.

The VCS supports the location, call and registration service types of SRV record as defined by this Annex.

Location service SRV records

Location records are required for gatekeepers that route calls to the VCS. For each domain hosted by the VCS, you should configure a location service SRV record as follows:

- **_Service** is **_h323ls**
- **_Proto** is **_udp**
- Port is the port number that has been configured from **Configuration > Protocols > H.323** as the **Registration UDP port**

Call signaling SRV records

Call signaling SRV records (and A/AAAA records) are intended primarily for use by non-registered endpoints which cannot participate in a location transaction, exchanging LRQ and LCF. For each domain hosted by the VCS, you should configure a call signaling SRV record as follows:

- **_Service** is **_h323cs**
- **_Proto** is **_tcp**
- Port is the port number that has been configured from **Configuration > Protocols > H.323** as the **Call signaling TCP port**.

Registration service SRV records

Registration records are used by devices attempting to register to the VCS. For each domain hosted by the VCS, you should configure a registration service SRV record as follows:

- **_Service** is **_h323rs**
- **_Proto** is **_udp**
- Port is the port number that has been configured from **Configuration > Protocols > H.323** as the **Registration UDP port**

Configuring SIP SRV records

RFC 3263 describes the DNS procedures used to resolve a SIP URI into the IP address, port, and transport protocol of the next hop to contact.

If you want the VCS to be contactable using SIP URI dialing, you should configure an SRV record for each SIP transport protocol enabled on the VCS (that is, UDP, TCP or TLS) as follows:

- Valid combinations of **_Service** and **_Proto** are:
  - **_sips._tcp**
  - **_sip._tcp**
  - **_sip._udp** (although not recommended)

- Port is the IP port number that has been configured from **Configuration > Protocols > SIP** as the port for that particular transport protocol.

_sip._udp is not recommended because SIP messages for video systems are too large to be carried on a packet based (rather than stream based) transport. UDP is often used for audio only devices. Also, UDP tends to be spammed more than TCP or TLS.

Example DNS record configuration

A company with the domain name **example.com** wants to enable incoming H.323 and SIP calls using URI addresses in the format **user@example.com**. The VCS hosting the domain has the FQDN **vcs.example.com**.

Their DNS records would typically be as follows:

- SRV record for **_h323ls._udp.example.com** returns **vcs.example.com**
- SRV record for **_h323cs._tcp.example.com** returns **vcs.example.com**
- SRV record for **_h323rs._tcp.example.com** returns **vcs.example.com**
- NAPTR record for **example.com** returns
  - **_sip._tcp.example.com** and
  - **_sips._tcp.example.com**
- SRV record for **_sip._tcp.example.com** returns **vcs.example.com**
- SRV record for **_sips._tcp.example.com** returns **vcs.example.com**
- A record for **vcs.example.com** returns the IPv4 address of the VCS
- AAAA record for **vcs.example.com** returns the IPv6 address of the VCS

How you add the DNS records depends on the type of DNS server you are using. Instructions for setting up two common DNS servers are given in the DNS configuration examples [p.408] section.

For locally registered H.323 endpoints to be reached using URI dialing, either:

- the H.323 endpoints should register with the VCS using an address in the format of a URI
- an appropriate transform should be written to convert URIs into the format used by the H.323 registrations. An example would be a deployment where H.323 endpoints register with an alias, and incoming calls are made to alias@domain.com. A local transform is then configured to strip the @domain, and the search is made locally for alias. See Stripping @domain for dialing to H.323 numbers [p.210] for an example of how to do this.

SIP endpoints always register with an AOR in the form of a URI, so no special configuration is required.

Several mechanisms could have been used to locate the VCS. You may want to enable calls placed to **user@<IP_address>** to be routed to an existing registration for **user@example.com**. In this case you would configure a pre-search transform that would strip the IP_address suffix from the incoming URI and replace it with the suffix of **example.com**.

URI dialing and firewall traversal

If URI dialing via DNS is being used in conjunction with firewall traversal, DNS zones should be configured on the VCS Expressway and any VCSs on the public network only. VCSs behind the firewall should not have any DNS zones configured. This will ensure that any outgoing URI calls made by endpoints registered with the VCS will be routed through the VCS Expressway.

In addition, the DNS records for incoming calls should be configured with the address of the VCS Expressway as the authoritative gatekeeper/proxy for the enterprise (the DNS configuration examples [p.408] section for more information). This ensures that incoming calls placed using URI dialing enter the enterprise through the VCS Expressway, allowing successful traversal of the firewall.

About ENUM dialing

ENUM dialing allows an endpoint to be contacted by a caller dialing an E.164 number - a telephone number - even if that endpoint has registered using a different format of alias.

Using ENUM dialing, when an E.164 number is dialed it is converted into a URI using information stored in DNS. The VCS then attempts to find the endpoint based on the URI that has been returned.

The ENUM dialing facility allows you to retain the flexibility of URI dialing while having the simplicity of being called using just a number - particularly important if any of your callers are restricted to dialing using a numeric keypad.

The VCS supports outward ENUM dialing by allowing you to configure ENUM zones on the VCS. When an ENUM zone is queried, this triggers the VCS to transform the E.164 number that was dialed into an ENUM domain which is then queried for using DNS.

Note: ENUM dialing relies on the presence of relevant DNS NAPTR records for the ENUM domain being queried. These are the responsibility of the administrator of that domain.

ENUM dialing process

When the VCS attempts to locate a destination endpoint using ENUM, the general process is as follows:

1. The user dials the E.164 number from their endpoint.
2. The VCS converts the E.164 number into an ENUM domain as follows:
   a. The digits are reversed and separated by a dot.
   b. The name of the domain that is hosting the NAPTR records for that E.164 number is added as a suffix.
3. DNS is then queried for the resulting ENUM domain.
4. If a NAPTR record exists for that ENUM domain, this will advise how the number should be converted into one (or possibly more) H.323/SIP URIs.
5. The VCS begins the search again, this time for the converted URI as per the URI dialing process. Note that this is considered to be a completely new search, and so pre-search transforms and Call Policy will therefore apply.

Enabling ENUM dialing

ENUM dialing is enabled separately for incoming and outgoing calls.

Outgoing calls

To allow locally registered endpoints to dial out to other endpoints using ENUM, you must:

- configure at least one ENUM zone, and
- configure at least one DNS Server

This is described in the ENUM dialing for outgoing calls [p.236] section.

Incoming calls

To enable endpoints in your enterprise to receive incoming calls from other endpoints via ENUM dialing, you must configure a DNS NAPTR record mapping your endpoints' E.164 numbers to their SIP/H.323 URIs. See the ENUM dialing for incoming calls [p.239] section for instructions on how to do this.

Note: if an ENUM zone and a DNS server have not been configured on the local VCS, calls made using ENUM dialing could still be placed if the local VCS is neighbored with another VCS that has been appropriately configured for ENUM dialing. Any ENUM dialed calls will go via the neighbor. This configuration is useful if you want all ENUM dialing from your enterprise to be configured on one particular system.

ENUM dialing for outgoing calls

For a local endpoint to be able to dial another endpoint using ENUM via your VCS, the following conditions must be met:

- There must be a NAPTR record available in DNS that maps the called endpoint's E.164 number to its URI. It is the responsibility of the administrator of the enterprise to which the called endpoint belongs to provide this record, and they will only make it available if they want the endpoints in their enterprise to be contactable via ENUM dialing.
- You must configure an ENUM zone on your local VCS. This ENUM zone must have a DNS Suffix that is the same as the domain where the NAPTR record for the called endpoint is held.
- You must configure your local VCS with the address of at least one DNS server that it can query for the NAPTR record (and if necessary any resulting URI).

After the ENUM process has returned one or more URIs, a new search will begin for each of these URIs in accordance with the URI dialing process. If the URIs belong to locally registered endpoints, no further configuration is required. However, if one or more of the URIs are not locally registered, you may also need to configure a DNS zone if they are to be located using a DNS lookup.

Calling process

The process below is followed when an ENUM (E.164) number is dialed from an endpoint registered with your VCS:

1. The user dials the E.164 number from their endpoint.
2. The VCS initiates a search for the E.164 number as dialed. It follows the usual call routing process.
3. After applying any pre-search transforms, the VCS checks its search rules to see if any of them are configured with a **Mode** of either:
   - *Any alias*, or
   - *Alias pattern match* with a pattern that matches the E.164 number
4. The target zones associated with any matching search rules are queried in rule priority order.
   - If a target zone is a neighbor zone, the neighbor is queried for the E.164 number. If the neighbor supports ENUM dialing, it may route the call itself.
   - If a target zone is an ENUM zone, the VCS attempts to locate the endpoint through ENUM. As and when each ENUM zone configured on the VCS is queried, the E.164 number is transformed into an ENUM domain as follows:
     i. The digits are reversed and separated by a dot.
     ii. The **DNS suffix** configured for that ENUM zone is appended.
5. DNS is then queried for the resulting ENUM domain.
6. If the DNS server finds at that ENUM domain a NAPTR record that matches the transformed E.164 number (that is, after it has been reversed and separated by a dot), it returns the associated URI to the VCS.
7. The VCS then initiates a new search for that URI (maintaining the existing hop count). The VCS starts at the beginning of the search process (applying any pre-search transforms, then searching local and external

zones in priority order).From this point, as it is now searching for a SIP/H.323 URI, the process for URI dialing is followed.

In this example, we want to call Fred at Example Corp. Fred's endpoint is actually registered with the URI **fred@example.com**, but to make it easier to contact him his system administrator has configured a DNS NAPTR record mapping this alias to his E.164 number: **+44123456789**.

We know that the NAPTR record for **example.com** uses the DNS domain of **e164.arpa**.

1. We create an ENUM zone on our local VCS with a **DNS suffix** of **e164.arpa**.
2. We configure a search rule with a **Pattern match mode** of *Any alias*, and set the **Target** to the ENUM zone. This means that ENUM will always be queried regardless of the format of the alias being searched for.
3. We dial **44123456789** from our endpoint.
4. The VCS initiates a search for a registration of **44123456789** and the search rule of *Any alias* means the ENUM zone is queried. (Note that other higher priority searches could potentially match the number first.)
5. Because the zone being queried is an ENUM zone, the VCS is automatically triggered to transform the number into an ENUM domain as follows:
   a. The digits are reversed and separated by a dot: **9.8.7.6.5.4.3.2.1.4.4**.
   b. The **DNS suffix** configured for this ENUM zone, **e164.arpa**, is appended. This results in a transformed domain of **9.8.7.6.5.4.3.2.1.4.4.e164.arpa**.
6. DNS is then queried for that ENUM domain.
7. The DNS server finds the domain and returns the information in the associated NAPTR record. This tells the VCS that the E.164 number we have dialed is mapped to the SIP URI of **fred@example.com**.
8. The VCS then starts another search, this time for **fred@example.com**. From this point the process for URI dialing is followed, and results in the call being forwarded to Fred's endpoint.

Configuring zones and search rules for ENUM dialing

To support ENUM dialing, you must configure an ENUM zone and related search rules for each ENUM service used by remote endpoints.

Adding and configuring ENUM zones

To set up an ENUM zone:

1. Go to **Configuration > Zones > Zones**.
2. Click **New**. You are taken to the **Create zone** page.
3. Enter a **Name** for the zone and select a **Type** of *ENUM*.
4. Configure the ENUM zone settings as follows:

Field	Guidelines
Hop count	The hop count specified for an ENUM zone is applied in the same manner as hop counts for other zone types. The currently applicable hop count is maintained when the VCS initiates a new search process for the alias returned by the DNS lookup.
DNS suffix	The suffix to append to a transformed E.164 number to create an ENUM host name. It represents the DNS zone (in the domain name space) to be queried for a NAPTR record.

Field	Guidelines
H.323 mode	Controls if H.323 records are looked up for this zone.
SIP mode	Controls if SIP records are looked up for this zone.

5. Click **Create zone**.

Note that:

- Any number of ENUM zones may be configured on the VCS. You should configure at least one ENUM zone for each DNS suffix that your endpoints may use.
- Normal search rule pattern matching and prioritization rules apply to ENUM zones.
- You must also configure the VCS with details of DNS servers to be used when searching for NAPTR records.

Configuring search rules for ENUM zones

If you want locally registered endpoints to be able to make ENUM calls via the VCS, then at a minimum you should configure an ENUM zone and a related search rule with:

- a **DNS suffix** of **`e164.arpa`** (the domain specified by the ENUM standard)
- a related search rule with a **Mode** of *Any alias*

This results in DNS always being queried for all types of aliases, not just ENUMs. It also means that ENUM dialing will only be successful if the enterprise being dialed uses the **`e164.arpa`** domain. To ensure successful ENUM dialing, you must configure an ENUM zone for each domain that holds NAPTR records for endpoints that callers in your enterprise might want to dial.

You can then set up search rules that filter the queries sent to each ENUM zone as follows:

- use a **Mode** of *Alias pattern match*
- use the **Pattern string** and **Pattern type** fields to define the aliases for each domain that will trigger an ENUM lookup

For example, you want to enable ENUM dialing from your network to a remote office in the UK where the endpoints' E.164 numbers start with **`44`**. You would configure an ENUM zone on your VCS, and then an associated search rule with:

- **Mode** of *Alias pattern match*
- **Pattern string** of **`44`**
- **Pattern type** of *Prefix*

This results in an ENUM query being sent to that zone only when someone dials a number starting with **`44`**.

Configuring transforms for ENUM zones

You can configure transforms for ENUM zones in the same way as any other zones (see the Search and zone transform process [p.202] section for full information).

Any ENUM zone transforms are applied before the number is converted to an ENUM domain.

For example, you want to enable ENUM dialing from your network to endpoints at a remote site using a prefix of **8** followed by the last 4 digits of the remote endpoints' E.164 number. You would configure an ENUM zone on your VCS and then an associated search rule with:

- **Mode** of *Alias pattern match*
- **Pattern string** of `8(\d{4})`
- **Pattern type** of *Regex*
- **Pattern behavior** of *Replace*
- **Replace string** of `44123123(\1)`

With this configuration, it is the resulting string (`44123123xxxx`) that is converted into an ENUM domain and queried for via DNS.

To verify you have configured your outward ENUM dialing correctly, use the Locate tool (**Maintenance > Tools > Locate**) to try to resolve an E.164 alias.

ENUM dialing for incoming calls

For your locally registered endpoints to be reached using ENUM dialing, you must configure a DNS NAPTR record that maps your endpoints' E.164 numbers to their SIP/H.323 URIs. This record must be located at an appropriate DNS domain where it can be found by any systems attempting to reach you by using ENUM dialing.

About DNS domains for ENUM

ENUM relies on the presence of NAPTR records to provide the mapping between E.164 numbers and their SIP/H.323 URIs.

RFC 3761, which is part of a suite of documents that define the ENUM standard, specifies that the domain for ENUM - where the NAPTR records should be located for public ENUM deployments - is `e164.arpa`. However, use of this domain requires that your E.164 numbers are assigned by an appropriate national regulatory body. Not all countries are yet participating in ENUM, so you may want to use an alternative domain for your NAPTR records. This domain could reside within your corporate network (for internal use of ENUM) or it could use a public ENUM database such as `http://www.e164.org`.

Configuring DNS NAPTR records

ENUM relies on the presence of NAPTR records, as defined by *RFC 2915*. These are used to obtain an H.323 or SIP URI from an E.164 number.

The record format that the VCS supports is:

```
order flag preference service regex replacement
```

where:

- `order` and `preference` determine the order in which NAPTR records are processed. The record with the lowest order is processed first, with those with the lowest preference being processed first in the case of matching order.
- `flag` determines the interpretation of the other fields in this record. Only the value `u` (indicating that this is a terminal rule) is currently supported, and this is mandatory.
- `service` states whether this record is intended to describe E.164 to URI conversion for H.323 or for SIP. Its value must be either `E2U+h323` or `E2U+SIP`.
- `regex` is a regular expression that describes the conversion from the given E.164 number to an H.323 or SIP URI.
- `replacement` is not currently used by the VCS and should be set to `.` (the full stop character).

Non-terminal rules in ENUM are not currently supported by the VCS. For more information on these, see section 2.4.1 of *RFC 3761*.

For example, the record:

```
IN NAPTR 10 100 "u" "E2U+h323" "!^(.*)$!h323:\1@example.com!" .
```

would be interpreted as follows:

- **10** is the **order**
- **100** is the **preference**
- **u** is the **flag**
- **E2U+h323** states that this record is for an H.323 URI
- **!^(.*)$!h323:\1@example.com!** describes the conversion:
  - **!** is a field separator
  - the first field represents the string to be converted. In this example, **^(.*)$** represents the entire E.164 number
  - the second field represents the H.323 URI that will be generated. In this example, **h323:\1@example.com** states that the E.164 number will be concatenated with **@example.com**. For example, **1234** will be mapped to **1234@example.com**.
- **.** shows that the replacement field has not been used.

Configuring DNS servers for ENUM and URI dialing

DNS servers are required to support ENUM and URI dialing:

- **ENUM dialing**: to query for NAPTR records that map E.164 numbers to URIs
- **URI dialing**: to look up endpoints that are not locally registered or cannot be accessed via neighbor systems

To configure the DNS servers used by the VCS for DNS queries:

1. Go to the **DNS** page (**System > DNS**).
2. Enter in the **Address 1** to **Address 5** fields the IP addresses of up to 5 DNS servers that the VCS will query when attempting to locate a domain. These fields must use an IP address, not a FQDN.

Configuring call routing and signaling

The **Call routing** page (**Configuration > Call routing**) is used to configure the VCS's call routing and signaling functionality.

Call signaling optimization

Calls are made up of two components - signaling and media. For traversal calls, the VCS always handles both the media and the signaling. For non-traversal calls, the VCS does not handle the media, and may or may not need to handle the signaling.

The **Call signaling optimization** setting specifies whether the VCS removes itself, where it can, from the call signaling path after the call has been set up. The options for this setting are:

- *Off*: the VCS always handles the call signaling. The call consumes either a traversal call license or a local (non-traversal) call license on the VCS.
- *On*: the VCS handles the call signaling when the call is one of:
  - a traversal call
  - an H.323 call that has been modified by Call Policy or FindMe such that:
    - the call resolves to more than one alias
    - the source alias of the call has been modified to display the associated FindMe ID
    - the FindMe has a "no answer" or "busy" device configured
  - one of the endpoints in the call is locally registered
  - a SIP call where the incoming transport protocol (UDP, TCP, TLS) is different from the outgoing protocol

  In all other cases the VCS removes itself from the call signaling path after the call has been set up. The VCS does not consume a call license for any such calls, and the call signaling path is simplified. This setting is useful in a hierarchical dial plan, when used on the directory VCS. In such deployments the directory VCS is used to look up and locate endpoints and it does not have any endpoints registered directly to it.

Call loop detection mode

Your dial plan or that of networks to which you are neighbored may be configured in such a way that there are potential signaling loops. An example of this is a structured dial plan, where all systems are neighbored together in a mesh. In such a configuration, if the hop counts are set too high, a single search request may be sent repeatedly around the network until the hop count reaches 0, consuming resources unnecessarily.

The VCS can be configured to detect search loops within your network and terminate such searches through the **Call loop detection mode** setting, thus saving network resources. The options for this setting are:

- *On*: the VCS will fail any branch of a search that contains a loop, recording it as a level 2 "loop detected" event. Two searches are considered to be a loop if they meet all of the following criteria:
  - have same call tag
  - are for the same destination alias
  - use the same protocol
  - originate from the same zone
- *Off*: the VCS will not detect and fail search loops. You are recommended to use this setting only in advanced deployments.

Identifying calls

Each call that passes through the VCS is assigned a Call ID and a Call Serial Number. Calls also have a Call Tag assigned if one does not already exist.

Call ID

The VCS assigns each call currently in progress a different Call ID. The Call ID numbers start at 1 and go up to the maximum number of calls allowed on that system.

Each time a call is made, the VCS will assign that call the lowest available Call ID number. For example, if there is already a call in progress with a Call ID of 1, the next call will be assigned a Call ID of 2. If Call 1 is then disconnected, the third call to be made will be assigned a Call ID of 1.

The Call ID is not therefore a unique identifier: while no two calls in progress at the same time will have the same Call ID, the same Call ID will be assigned to more than one call over time.

Note that the VCS web interface does not show the Call ID.

Call Serial Number

The VCS assigns a unique Call Serial Number to every call passing through it. No two calls on a VCS will ever have the same Call Serial Number. A single call passing between two or more VCSs will be identified by a different Call Serial Number on each system.

Call Tag

Call Tags are used to track calls passing through a number of VCSs. When the VCS receives a call, it checks to see if there is a Call Tag already assigned to it. If so, the VCS will use the existing Call Tag; if not, it will assign a new Call Tag to the call. This Call Tag is then included in the call's details when the call is forwarded on. A single call passing between two or more VCSs will be assigned a different Call Serial Number each time it arrives at a VCS (including one it has already passed through) but can be identified as the same call by use of the Call Tag. This is particularly useful if you are using a remote syslog server to collate events across a number of VCSs in your network.

The Call Tag also helps identify loops in your network - it is used as part of the automatic call loop detection feature, and you can also search the Event Log for all events relating to a single call tag. Loops occur when a query is sent to a neighbor zone and passes through one or more systems before being routed back to the original VCS. In this situation the outgoing and incoming query will have different Call Serial Numbers and may even be for different destination aliases (depending on whether any transforms were applied). However, the call will still have the same Call Tag.

Note: If a call passes through a system that is not a VCS or TelePresence Conductor then the Call Tag information will be lost.

Identifying calls in the CLI

To control a call using the CLI, you must reference the call using either its Call ID or Call Serial Number. These can be obtained using the command:

```
xStatus Calls
```

This returns details of each call currently in progress in order of their Call ID. The second line of each entry lists the Call Serial Number, and the third lists the Call Tag.

Disconnecting calls

Disconnecting a call using the web interface

To disconnect one or more existing calls using the web interface:

1. Go to the **Calls** page (**Status > Calls**).
2. If you want to confirm the details of the call, including the Call Serial Number and Call Tag, click **View**. Click the back button on your browser to return to the **Calls** page.
3. Select the box next to the calls you want to terminate and click **Disconnect**.

Note that if your VCS is part of a cluster you have to be logged into the peer through which the call is associated to be able to disconnect the call.

Disconnecting a call using the CLI

To disconnect an existing call using the CLI, you must first obtain either the call ID number or the call serial number (see Identifying calls [p.243]). Then use either one of the following commands as appropriate:

- **`xCommand DisconnectCall Call: <ID number>`**
- **`xCommand DisconnectCall CallSerialNumber: <serial number>`**

While it is quicker to use the call ID number to reference the call to be disconnected, there is a risk that in the meantime the call has already been disconnected and the call ID assigned to a new call. For this reason, the VCS also allows you to reference the call using the longer but unique call serial number.

Note that when disconnecting a call, only the call with that Call Serial Number is disconnected. Other calls with the same Call Tag but a different Call Serial Number may not be affected.

Limitations when disconnecting SIP calls

Call disconnection works differently for H.323 and SIP calls due to differences in the way the protocols work.

For H.323 calls, and interworked calls, the **`Disconnect`** command actually disconnects the call.

For SIP calls, the **`Disconnect`** command causes the VCS to release all resources used for the call; the call will appear as disconnected on the VCS. However, endpoints will still consider themselves to be in the call. SIP calls are peer-to-peer, and as the VCS is a SIP proxy it has no authority over the endpoints. Releasing the resources on the VCS means that the next time there is any signaling from the endpoint to the VCS, the VCS will respond with a '481 Call/Transaction Does Not Exist' causing the endpoint to clear the call.

Note that endpoints that support SIP session timers (see RFC 4028) have a call refresh timer which allows them to detect a hung call (signaling lost between endpoints). The endpoints will release their resources after the next session-timer message exchange.

Bandwidth control

This section describes how to control the bandwidth that is used for calls within your Local Zone, as well as calls out to other zones (**Configuration > Local Zone** and **Configuration > Bandwidth**).

About bandwidth control 246
Configuring bandwidth controls 247
About subzones 248
Links and pipes 254
Bandwidth control examples 257

About bandwidth control

The VCS allows you to control the amount of bandwidth used by endpoints on your network. This is done by grouping endpoints into subzones, and then using links and pipes to apply limits to the bandwidth that can be used:

- within each subzone
- between a subzone and another subzone
- between a subzone and a zone

Bandwidth limits may be set on a call-by-call basis and/or on a total concurrent usage basis. This flexibility allows you to set appropriate bandwidth controls on individual components of your network.

Calls will fail if links are not configured correctly. You can check whether a call will succeed, and what bandwidth will be allocated to it, using the command **`xCommand CheckBandwidth`**.

For specific information about how bandwidth is managed across peers in a cluster, see Sharing bandwidth across peers [p.190].

Example network deployment

The following diagram shows a typical network deployment:

- a broadband LAN between the Enterprise and the internet, where high bandwidth calls are acceptable
- a pipe to the internet (Pipe A) with restricted bandwidth
- two satellite offices, Branch and Home, each with their own internet connections and restricted pipes

In this example each pool of endpoints has been assigned to a different subzone, so that suitable limitations can be applied to the bandwidth used within and between each subzone based on the amount of bandwidth they have available via their internet connections.

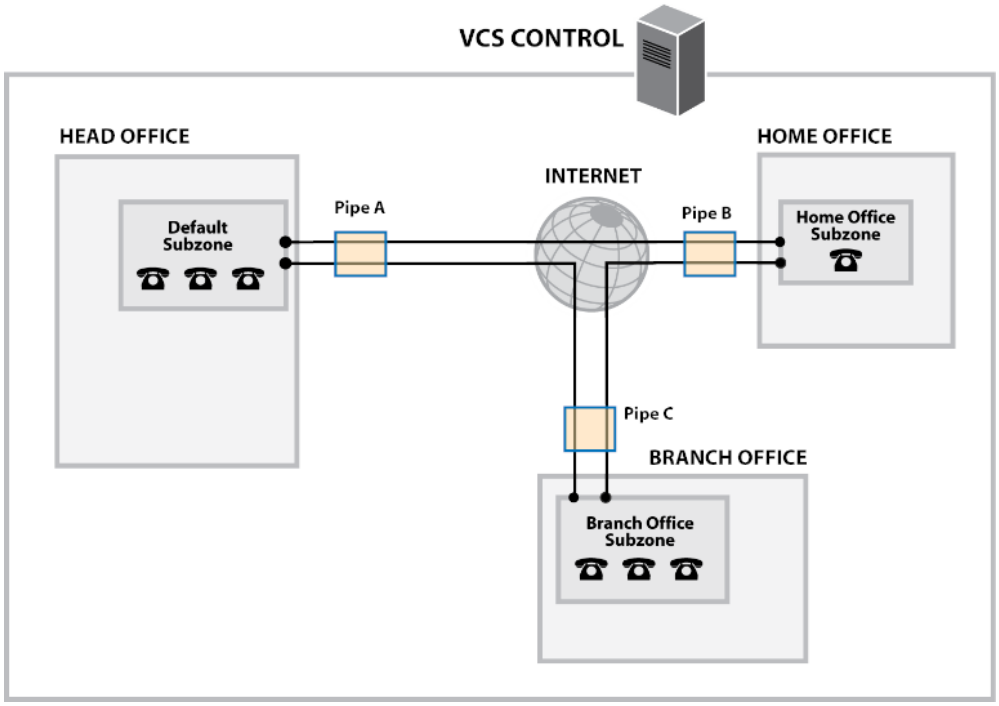

Configuring bandwidth controls

The **Bandwidth configuration** page (**Configuration > Bandwidth > Configuration**) is used to specify how the VCS behaves in situations when it receives a call with no bandwidth specified, and when it receives a call that requests more bandwidth than is currently available.

The configurable options are:

Field	Description	Usage tips
Default call bandwidth (kbps)	The bandwidth to use for calls for which no bandwidth value has been specified by the system that initiated the call. It also defines the minimum bandwidth to use on SIP to H.323 interworked calls. This value cannot be blank. The default value is 384kbps.	Usually, when a call is initiated the endpoint will include in the request the amount of bandwidth it wants to use.
Downspeed per call mode	Determines what happens if the **per-call** bandwidth restrictions on a subzone or pipe mean that there is insufficient bandwidth available to place a call at the requested rate. *On*: the call will be downspeeded. *Off*: the call will not be placed.	
Downspeed total mode	Determines what happens if the **total** bandwidth restrictions on a subzone or pipe mean that there is insufficient bandwidth available to place a call at the requested rate. *On*: the call will be downspeeded. *Off*: the call will not be placed.	

About downspeeding

If bandwidth control is in use, there may be situations when there is insufficient bandwidth available to place a call at the requested rate. By default (and assuming that there is some bandwidth still available) the VCS will still attempt to connect the call, but at a reduced bandwidth – this is known as **downspeeding**.

Downspeeding can be configured so that it is applied in either or both of the following scenarios:

- when the requested bandwidth for the call exceeds the lowest per-call limit for the subzone or pipes
- when placing the call at the requested bandwidth would mean that the total bandwidth limits for that subzone or pipes would be exceeded

You can turn off downspeeding, in which case if there is insufficient bandwidth to place the call at the originally requested rate, the call will not be placed at all. This could be used if, when your network is nearing capacity, you would rather a call failed to connect at all than be connected at a lower than requested speed. In this situation endpoint users will get one of the following messages, depending on the system that initiated the search:

- "Exceeds Call Capacity"
- "Gatekeeper Resources Unavailable"

About subzones

The Local Zone is made up of subzones. Subzones are used to control the bandwidth used by various parts of your network, and to control the VCS's registration, authentication and media encryption policies.

When an endpoint registers with the VCS it is allocated to an appropriate subzone, determined by subzone membership rules based on endpoint IP address ranges or alias pattern matches.

You can create and configure subzones through the **Subzones** page (**Configuration > Local Zone > Subzones**).

Three special subzones — the Default Subzone, the Traversal Subzone and the Cluster Subzone (only applies if the VCS is in a cluster) — are automatically created and cannot be deleted.

Default links between subzones

The VCS is shipped with the Default Subzone and Traversal Subzone (and Default Zone) already created, and with links between them. If the VCS is added to a cluster then default links to the Cluster Subzone are also established automatically. You can delete or amend these default links if you need to model restrictions of your network.

About the Traversal Subzone

The Traversal Subzone is a conceptual subzone. No endpoints can be registered to the Traversal Subzone; its sole purpose is to control the bandwidth used by traversal calls.

The **Traversal Subzone** page (**Configuration > Local Zone > Traversal Subzone**) allows you to place bandwidth restrictions on calls being handled by the Traversal Subzone and to configure the range of ports used for the media in traversal calls.

Configuring bandwidth limitations

All traversal calls pass through the Traversal Subzone, so by applying bandwidth limitations to the Traversal Subzone you can control how much processing of media the VCS will perform at any one time. These limitations can be applied on a total concurrent usage basis, and on a per-call basis.

See Applying bandwidth limitations to subzones [p.252] for more details.

Configuring the Traversal Subzone ports

You can configure the range of ports used for the media in traversal calls. A single traversal call can consist of up to 5 types of media (audio, video, far end camera control, dual streams and BFCP) and each type of media may require a pair of ports – for example, audio and video each require one port for RTP, and one for RTCP. Separate pairs of ports are required for the inbound and outbound portions of a call. A single traversal call can therefore take up to 20 ports; if the B2BUA is invoked this increases to 40 ports (or even more if extra media lines are required) as the call is routed through the B2BUA hosted on the VCS.

On new installations of X8.1 or later, the default media traversal port range is 36000 to 59999, and is set on the VCS Control (**Configuration > Local Zones > Traversal Subzone**). In Large VCS Expressway systems the first 12 ports in the range – 36000 to 36011 by default – are always reserved for multiplexed traffic. The VCS Expressway listens on these ports. You cannot configure a distinct range of demultiplex listening ports on Large systems: they always use the first 6 pairs in the media port range. On Small/Medium systems you can explicitly specify which 2 ports listen for multiplexed RTP/RTCP traffic, on the VCS Expressway (**Configuration > Traversal > Ports**). On upgrades to X8.2 or later, the VCS Control retains the media traversal port range from the previous version (could be 50000 - 54999 or 36000 - 59999, depending on source version). The VCS Expressway retains the previously configured demultiplexing pair (either 2776

& 2777 or 50000 & 50001 by default, depending on upgrade path) and the switch **Use configured demultiplexing ports** is set to *Yes*. If you do not want to use a particular pair of ports, switch **Use configured demultiplexing ports** to *No*, then the VCS Expressway will listen on the first pair of ports in the media traversal port range (36000 and 36001 by default). In this case, we recommend that you close the previously configured ports after you configure the firewall for the new ports. The port range can be changed to any values between 1024 and 65533. Ports are allocated from this range in pairs, with the first port number of each pair being an even number. Therefore the range must start with an even number and end with an odd number.

To configure the ports used for media in traversal calls, go to **Configuration > Local Zone > Traversal Subzone**.

You must ensure that the port range is large enough to support the maximum number of traversal calls available on your VCS. A single traversal call can take up to 40 ports. So for example, if your VCS is licensed for 5 traversal calls you must ensure that the range of ports configured for traversal media is at least 200. If you add extra traversal call licenses to your system, you must also ensure that the range of ports available is sufficient.

Configuring the Default Subzone

The **Default Subzone** page (**Configuration > Local Zone > Default Subzone**) is used to place bandwidth restrictions on calls involving endpoints in the Default Subzone, and to specify the Default Subzone's registration, authentication and media encryption policies.

When an endpoint registers with the VCS, its IP address and alias is checked against the subzone membership rules and it is assigned to the appropriate subzone. If no subzones have been created, or the endpoint's IP address or alias does not match any of the subzone membership rules, it is assigned to the Default Subzone (subject to the Default Subzone's **Registration policy** and **Authentication policy**).

The use of a Default Subzone on its own (without any other manually created subzones) is suitable only if you have uniform bandwidth available between all your endpoints. Note that if your Local Zone contains two or more different networks with different bandwidth limitations, you should configure separate subzones for each different part of the network.

Default Subzone configuration options

The Default Subzone can be configured in the same manner as any other manually created subzone.

Configuring subzones

The **Subzones** page (**Configuration > Local Zone > Subzones**) lists all the subzones that have been configured on the VCS, and allows you to create, edit and delete subzones. For each subzone, it shows how many membership rules it has, how many devices are currently registered to it, and the current number of calls and bandwidth in use. Up to 1000 subzones can be configured.

After configuring a subzone you should set up the Subzone membership rules which control which subzone an endpoint device is assigned to when it registers with the VCS as opposed to defaulting to the Default Subzone.

The configurable options are:

Field / section	Description
Registration policy	When an endpoint registers with the VCS, its IP address and alias is checked against the subzone membership rules and it is assigned to the appropriate subzone. If no subzones have been created, or the endpoint's IP address or alias does not match any of the subzone membership rules, it is assigned to the Default Subzone. In addition to using a registration restriction policy to control whether an endpoint can register with the VCS, you can also configure a subzone's **Registration policy** as to whether it will accept registrations assigned to it via the subzone membership rules. This provides additional flexibility when defining your registration policy. For example you can: ■ Deny registrations based on IP address subnet. You can do this by creating a subzone with associated membership rules based on an IP address subnet range, and then setting that subzone to deny registrations. ■ Configure the Default Subzone to deny registrations. This would cause any registration requests that do not match any of the subzone membership rules, and hence fall into the Default Subzone, to be denied. Note that registration requests have to fulfill any registration restriction policy rules before any subzone membership and subzone registration policy rules are applied.
Authentication policy	The **Authentication policy** setting controls how the VCS challenges incoming messages to the Default Subzone. See Authentication policy configuration options [p.130] for more information.
Media encryption mode	The **Media encryption mode** setting controls the media encryption capabilities for SIP calls flowing through the subzone. See Configuring media encryption policy [p.160] for more information. Note that if H.323 is enabled and the subzone has a media encryption mode of *Force encrypted* or *Force unencrypted*, any H.323 and SIP to H.323 interworked calls through this subzone will ignore this mode.
ICE support for media	Controls whether ICE messages are supported by the devices in this subzone.
Bandwidth controls	When configuring your subzones you can apply bandwidth limits to: ■ individual calls between two endpoints within the subzone ■ individual calls between an endpoint within the subzone and another endpoint outside of the subzone ■ the total of calls to or from endpoints within the subzone See Applying bandwidth limitations to subzones [p.252] for information about how bandwidth limits are set and managed.

Configuring subzone membership rules

The **Subzone membership rules** page (**Configuration > Local Zone > Subzone membership rules**) is used to configure the rules that determine, based on the address of the device, to which subzone an endpoint is assigned when it registers with the VCS.

The page lists all the subzone membership rules that have been configured on the VCS, and lets you create, edit, delete, enable and disable rules. Rule properties include:

- rule name and description
- priority

- the subnet or alias pattern matching configuration
- the subzone to which endpoints whose addresses satisfy this rule are assigned

Note that if an endpoint's IP address or registration alias does not match any of the membership rules, it is assigned to the Default Subzone.

Up to 3000 subzone membership rules can be configured.

The configurable options are:

Field	Description	Usage tips
Rule name	A descriptive name for the membership rule.	
Description	An optional free-form description of the rule.	The description appears as a tooltip if you hover your mouse pointer over a rule in the list.
Priority	The order in which the rules are applied (and thus to which subzone the endpoint is assigned) if an endpoint's address satisfies multiple rules.	The rules with the highest priority (1, then 2, then 3 and so on) are applied first. If multiple *Subnet* rules have the same priority, the rule with the largest prefix length is applied first. *Alias pattern match* rules at the same priority are searched in configuration order.
Type	Determines how a device's address is checked: *Subnet*: assigns the device if its IP address falls within the configured IP address subnet. *Alias pattern match*: assigns the device if its alias matches the configured pattern.	Pattern matching is useful, for example, for home workers on dynamic IP addresses; rather than having to continually update the subnet to match what has been allocated, you can match against their alias instead.
Subnet address and **Prefix length**	These two fields together determine the range of IP addresses that will belong to this subzone. The **Address range** field shows the range of IP addresses to be allocated to this subzone, based on the combination of the **Subnet address** and **Prefix length**.	Applies only if the **Type** is *Subnet*.
Pattern type	How the **Pattern string** must match the alias for the rule to be applied. Options are: *Exact*: the entire string must exactly match the alias character for character. *Prefix*: the string must appear at the beginning of the alias. *Suffix*: the string must appear at the end of the alias. *Regex*: treats the string as a regular expression.	Applies only if the **Type** is *Alias pattern match*.
Pattern string	The pattern against which the alias is compared.	Applies only if the **Type** is *Alias pattern match*.
Target subzone	The subzone to which an endpoint is assigned if its address satisfies this rule.	
State	Indicates if the rule is enabled or not.	Use this setting to test configuration changes, or to temporarily disable certain rules. Any disabled rules still appear in the rules list but are ignored.

Applying bandwidth limitations to subzones

You can apply bandwidth limits to the Traversal Subzone as follows:

You can apply bandwidth limits to the Default Subzone, Traversal Subzone and all manually configured subzones. The limits you can apply vary depending on the type of subzone, as follows:

Limitation	Description	Can be applied to
Total	Limits the total concurrent bandwidth being used by all endpoints in the subzone at any one time. In the case of the Traversal Subzone, this is the maximum bandwidth available for all concurrent traversal calls.	Default Subzone Traversal Subzone Manually configured subzones
Calls entirely within...	Limits the bandwidth of any individual call between two endpoints within the subzone.	Default Subzone Manually configured subzones
Calls into or out of...	Limits the bandwidth of any individual call between an endpoint in the subzone, and an endpoint in another subzone or zone.	Default Subzone Manually configured subzones
Calls handled by...	The maximum bandwidth available to any individual traversal call.	Traversal Subzone

For all the above limitations, the **Bandwidth restriction** setting has the following effect:

- *No bandwidth*: no bandwidth is allocated and therefore no calls can be made.
- *Limited*: limits are applied. You must also enter a value in the corresponding bandwidth (kbps) field.
- *Unlimited*: no restrictions are applied to the amount of bandwidth being used.

Use subzone bandwidth limits if you want to configure the bandwidth available between one specific subzone and **all other** subzones or zones.

Use pipes if you want to configure the bandwidth available between one specific subzone and **another specific** subzone or zone.

If your bandwidth configuration is such that multiple types of bandwidth restrictions are placed on a call (for example, if there are subzone bandwidth limits and pipe limits), the lowest limit will always apply to that call.

How different bandwidth limitations are managed

In situations where there are differing bandwidth limitations applied to the same link, the lower limit will always be the one used when routing the call and taking bandwidth limitations into account.

For example, Subzone A may have a per call inter bandwidth of 128. This means that any calls between Subzone A and any other subzone or zone will be limited to 128kbps. However, Subzone A also has a link configured between it and Subzone B. This link uses a pipe with a limit of 512kbps. In this situation, the lower limit of 128kbps will apply to calls between the two, regardless of the larger capacity of the pipe.

In the reverse situation, where Subzone A has a per call inter bandwidth limit of 512kbps and a link to Subzone B with a pipe of 128kbps, any calls between the two subzones will still be limited to 128kbps.

Bandwidth consumption of traversal calls

A non-traversal call between two endpoints within the same subzone would consume from that subzone the amount of bandwidth of that call.

A traversal call between two endpoints within the same subzone must, like all traversal calls, pass through the Traversal Subzone. This means that such calls consume an amount of bandwidth from the originating subzone's total concurrent allocation that is equal to twice the bandwidth of the call – once for the call from the subzone to the Traversal Subzone, and again for the call from the Traversal Subzone back to the originating subzone. In addition, as this call passes through the Traversal Subzone, it will consume an amount of bandwidth from the Traversal Subzone equal to that of the call.

Links and pipes

Configuring links

Links connect local subzones with other subzones and zones. For a call to take place, the endpoints involved must each reside in subzones or zones that have a link between them. The link does not need to be direct; the two endpoints may be linked via one or more intermediary subzones.

Links are used to calculate how a call is routed over the network and therefore which zones and subzones are involved and how much bandwidth is available. If multiple routes are possible, your VCS will perform the bandwidth calculations using the one with the fewest links.

The **Links** page (**Configuration > Bandwidth > Links**) lists all existing links and allows you to create, edit and delete links.

The following information is displayed:

Field	Description
Name	The name of the link. Automatically created links have names based on the nodes that the link is between.
Node 1 and **Node 2**	The Traversal Subzone and the zone that the link is between. The two subzones, or one subzone and one zone, that the link is between.
Pipe 1 and Pipe 2	Any pipes that have been used to apply bandwidth limitations to the link. See Applying pipes to links [p.256] for more information. Note that in order to apply a pipe, you must first have created it via the Pipes page.
Calls	Shows the total number of calls currently traversing the link.
Bandwidth used	Shows the total amount of bandwidth currently being consumed by all calls traversing the link.

You can configure up to 3000 links. Some links are created automatically when a subzone or zone is created.

Default links

If a subzone has no links configured, then endpoints within the subzone are only able to call other endpoints within the same subzone. For this reason, the VCS comes shipped with a set of pre-configured links and will also automatically create new links each time you create a new subzone.

Pre-configured links

The VCS is shipped with the Default Subzone, Traversal Subzone and Default Zone already created, and with default links pre-configured between them as follows: *DefaultSZtoTraversalSZ*, *DefaultSZtoDefaultZ* and *TraversalSZtoDefaultZ*. If the VCS is in a cluster, an additional link, *DefaultSZtoClusterSZ*, between the Default Subzone and the Cluster Subzone is also established.

You can edit any of these default links in the same way you would edit manually configured links. If any of these links have been deleted you can re-create them, either:

- manually through the web interface
- automatically by using the CLI command **`xCommand DefaultLinksAdd`**

Automatically created links

Whenever a new subzone or zone is created, links are automatically created as follows:

New zone/subzone type	Default links are created to...
Subzone	Default Subzone and Traversal Subzone
Neighbor zone	Default Subzone and Traversal Subzone
DNS zone	Default Subzone and Traversal Subzone
ENUM zone	Default Subzone and Traversal Subzone
Traversal client zone	Traversal Subzone
Traversal server zone	Traversal Subzone

Along with the pre-configured default links this ensures that, by default, any new subzone or zone has connectivity to all other subzones and zones. You may rename, delete and amend any of these default links.

Note: calls will fail if links are not configured correctly. You can check whether a call will succeed, and what bandwidth will be allocated to it, using the CLI command **`xCommand CheckBandwidth`**.

Configuring pipes

Pipes are used to control the amount of bandwidth used on calls between specific subzones and zones. The limits can be applied to the total concurrent bandwidth used at any one time, or to the bandwidth used by any individual call.

To apply these limits, you must first create a pipe and configure it with the required bandwidth limitations. Then when configuring links you assign the pipe to one or more links. Calls using the link will then have the pipe's bandwidth limitations applied to them. See Applying pipes to links [p.256] for more information.

The **Pipes** page (**Configuration > Bandwidth > Pipes**) lists all the pipes that have been configured on the VCS and allows you to create, edit and delete pipes.

The following information is displayed:

Field	Description
Name	The name of the pipe.
Total bandwidth	The upper limit on the total bandwidth used at any one time by all calls on all links to which this pipe is applied.
Per call bandwidth	The maximum bandwidth of any one call on the links to which this pipe is applied.
Calls	Shows the total number of calls currently traversing all links to which the pipe is applied.
Bandwidth used	Shows the total amount of bandwidth currently being consumed by all calls traversing all links to which the pipe is applied.

You can configure up to 1000 pipes.

See Applying bandwidth limitations to subzones [p.252] for more information about how the bandwidth limits are set and managed.

Applying pipes to links

Pipes are used to restrict the bandwidth of a link. When a pipe is applied to a link, it restricts the bandwidth of calls made between the two nodes of the link - the restrictions apply to calls in either direction. Normally a single pipe would be applied to a single link. However, one or more pipes may be applied to one or more links, depending on how you want to model your network.

One pipe, one link

Applying a single pipe to a single link is useful when you want to apply specific limits to calls between a subzone and another specific subzone or zone.

One pipe, two or more links

Each pipe may be applied to multiple links. This is used to model the situation where one site communicates with several other sites over the same broadband connection to the Internet. A pipe should be configured to represent the broadband connection, and then applied to all the links. This allows you to configure the bandwidth options for calls in and out of that site.

In the diagram below, Pipe A has been applied to two links: the link between the Default Subzone and the Home Office subzone, and the link between the Default Subzone and the Branch Office subzone. In this case, Pipe A represents the Head Office's broadband connection to the internet, and would have total and per-call restrictions placed on it.

Two pipes, one link

Each link may have up to two pipes associated with it. This is used to model the situation where the two nodes of a link are not directly connected, for example two sites that each have their own broadband connection to the Internet. Each connection should have its own pipe, meaning that a link between the two nodes should be subject to the bandwidth restrictions of both pipes.

In the diagram below, the link between the Default Subzone and the Home Office Subzone has two pipes associated with it: Pipe A, which represents the Head Office's broadband connection to the internet, and Pipe B, which represents the Home Office's dial-up connection to the internet. Each pipe would have bandwidth restrictions placed on it to represent its maximum capacity, and a call placed via this link would have the lower of the two bandwidth restrictions applied.

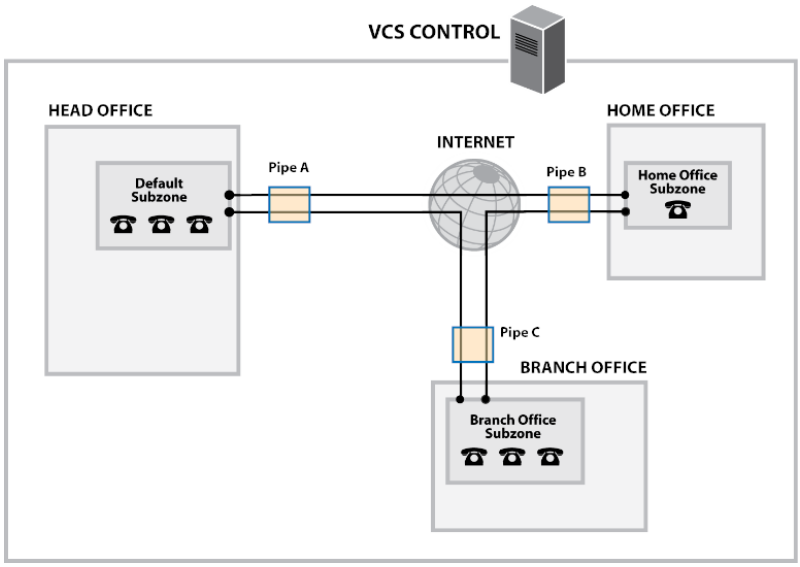

Bandwidth control examples

Without a firewall

In the example below, there are three geographically separate offices: Head, Branch and Home. All endpoints in the Head Office register with the VCS Control, as do those in the Branch and Home offices.

Each of the three offices is represented as a separate subzone on the VCS, with bandwidth configured according to local policy.

The enterprise's leased line connection to the Internet, and the DSL connections to the remote offices are modeled as separate pipes.

There are no firewalls involved in this scenario, so direct links can be configured between each of the offices. Each link is then assigned two pipes, representing the Internet connections of the offices at each end of the link.

In this scenario, a call placed between the Home Office and Branch Office will consume bandwidth from the Home and Branch subzones and on the Home and Branch pipes (Pipe B and Pipe C). The Head Office's bandwidth budget will be unaffected by the call.

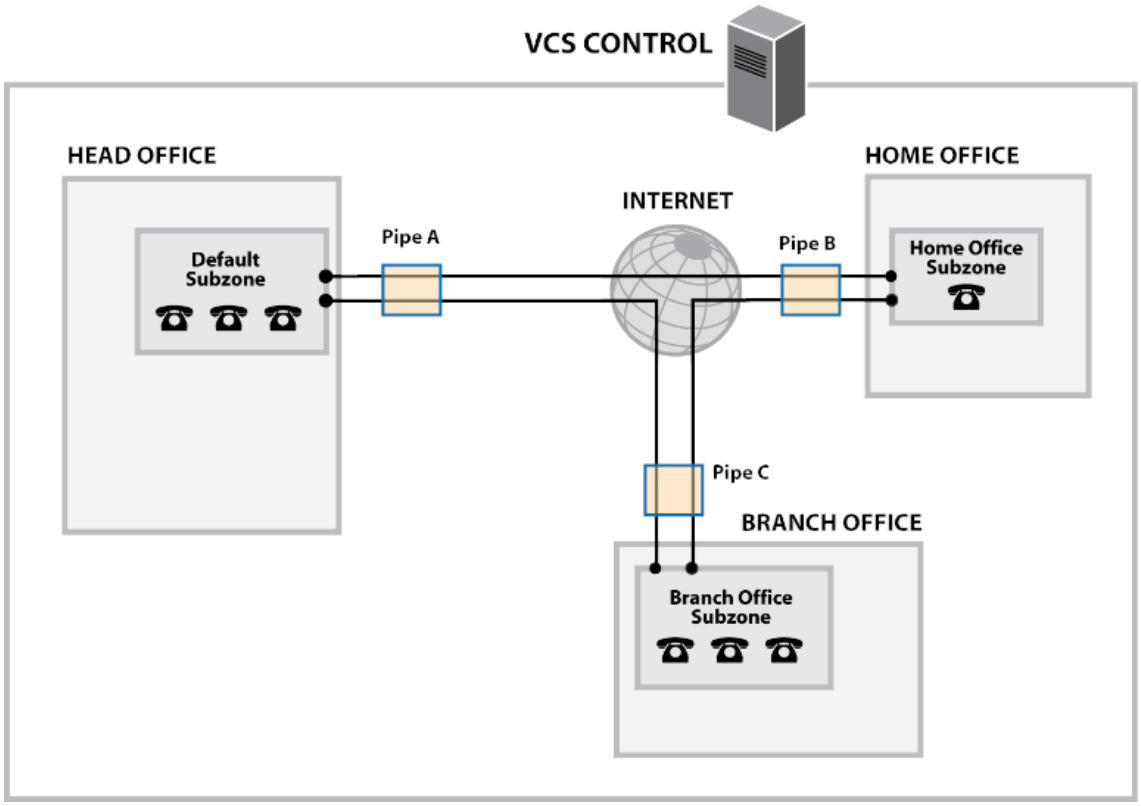

With a firewall

If the example deployment above is modified to include firewalls between the offices, we can use Cisco's Expressway firewall traversal solution to maintain connectivity. We do this by adding a VCS Expressway outside the firewall on the public internet, which will work in conjunction with the VCS Control and Home and Branch office endpoints to traverse the firewalls.

In this example, shown below, the endpoints in the Head Office register with the VCS Control, while those in the Branch and Home offices register with the VCS Expressway. The introduction of the firewalls means that there is no longer any direct connectivity between the Branch and Home offices. All traffic must be routed through the VCS Expressway. This is shown by the absence of a link between the Home and Branch subzones.

The VCS Expressway has subzones configured for the Home Office and Branch Office. These are linked to the VCS Expressway's Traversal Subzone, with pipes placed on each link. All calls from the VCS Expressway to the VCS Control must go through the Traversal Subzone and will consume bandwidth from this subzone. Note also that calls from the Home Office to the Branch Office must also go through the Traversal Subzone, and will also consume bandwidth from this subzone as well as the Home and Branch subzones and Home Office, Branch Office and Head Office pipes.

This example assumes that there is no bottleneck on the link between the VCS Expressway and the Head Office network, so a pipe has not been placed on this link. If you want to limit the amount of traffic flowing through your firewall, you could provision a pipe on this link.

Because the VCS Control is only managing endpoints on the Head Office LAN, its configuration is simpler. All of the endpoints in the Head Office are assigned to the Default Subzone. This is linked to the Traversal Subzone, through which all calls leaving the Head Office must pass.

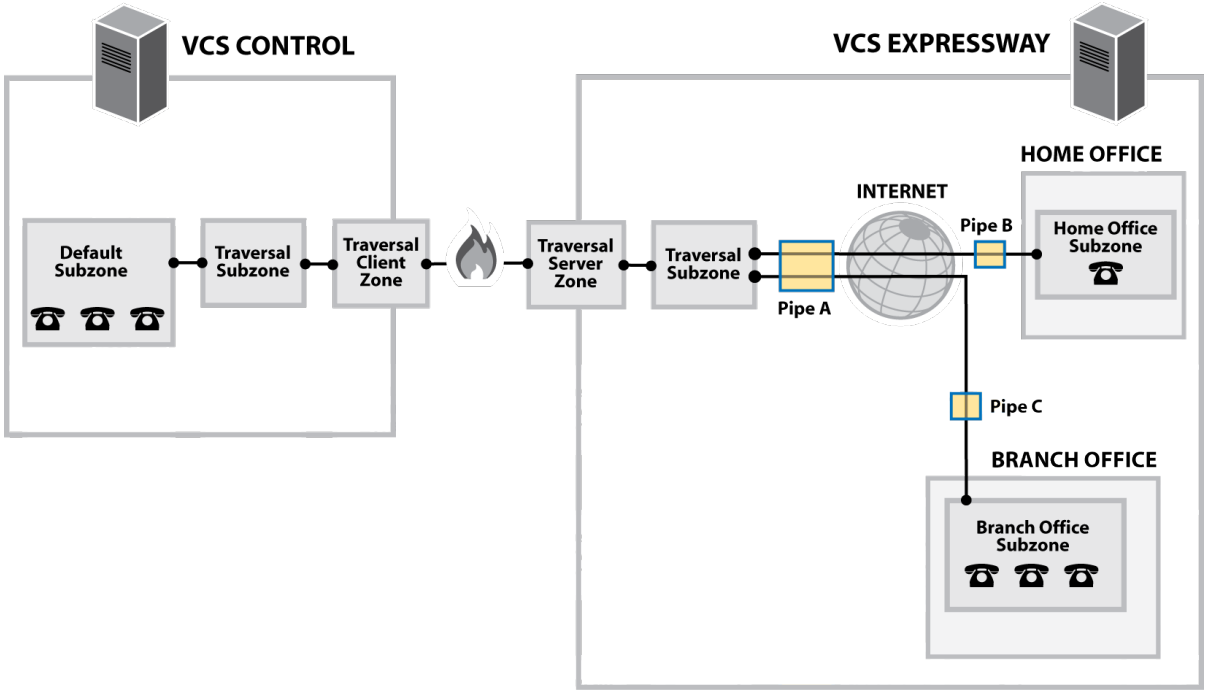

Applications

This section provides information about each of the additional services that are available under the **Applications** menu of the VCS.

Configuring Conference Factory 260
Presence 262
B2BUA (back-to-back user agent) overview 267
FindMe™ 275
Cisco TMS provisioning 279

Configuring Conference Factory

The **Conference Factory** page (**Applications > Conference Factory**) allows you to enable and disable the Conference Factory application, and configure the alias and template it uses.

The Conference Factory application allows the VCS to support the Multiway feature. Multiway enables endpoint users to create a conference while in a call even if their endpoint does not have this functionality built in.

Multiway is supported in Cisco TelePresence endpoints including the E20 (software version TE1.0 or later) and MXP range (software version F8.0 or later). Check with your Cisco representative for an up-to-date list of the Cisco endpoints and infrastructure products that support Multiway.

Conference creation process

When the Multiway feature is activated from the endpoint:

1. The endpoint calls a pre-configured alias which routes to the Conference Factory on the VCS.
2. The VCS replies to the endpoint with the alias that the endpoint should use for the Multiway conference. This alias will route to an MCU.
3. The endpoint then places the call to the MCU using the given alias, and informs the other participating endpoints to do the same.

The configurable options are:

Field	Description	Usage tips
Mode	Enables or disables the Conference Factory application.	
Alias	The alias that will be dialed by the endpoints when the Multiway feature is activated. This must also be configured on all endpoints that may be used to initiate the Multiway feature. An example could be `multiway@example.com`.	
Template	The alias that the VCS tells the endpoint to dial to create a Multiway conference on the MCU.	To ensure that each conference has a different alias, you should use *%%* as a part of the template. The *%%* will be replaced by a unique number each time the VCS receives a new conference request.
Number range start / end	The first and last numbers in the range that replaces *%%* in the template used to generate a conference alias.	For example, your **Template** could be `563%%@example.com` with a range of 10 - 999. The first conference will use the alias `563010@example.com`, the next conference will use `563011@example.com` and so on up to `563999@example.com`, after which it will loop round and start again at `563010@example.com`. (Note that the %% represents a fixed number of digits – with leading zeroes where required – based upon the length of the upper range limit.)

Note that:

- You must use a different **Template** on each VCS in your network that has the Conference Factory application enabled. If your VCS is part of a cluster, the **Template** must be different for each peer in the

cluster.

- The alias generated by the **Template** must be a fully-qualified SIP alias and must route to the MCU. The MCU must be configured to process this alias. No other special configuration is required on the MCU in order to support the Conference Factory application.
- **SIP mode** must be set to *On* (**Configuration > Protocols > SIP**) for the Conference Factory application to function. If you want to be able to initiate calls to the Conference Factory from H.323 endpoints, you must also set **H.323 mode** to *On* (**Configuration > Protocols > H.323**), and ensure that **H.323 <-> SIP interworking mode** is set to *Registered only* or *On* (**Configuration > Protocols > Interworking**).

See *Cisco TelePresence Multiway Deployment Guide* for full details on how to configure individual components of your network (endpoints, MCUs and VCSs) in order to use Multiway in your deployment.

Presence

Presence is the ability of endpoints to provide information to other users about their current status - such as whether they are offline, online, or in a call. Any entity which provides presence information, or about whom presence information can be requested, is known as a presentity. Presentities publish information about their own presence status, and also subscribe to the information being published by other presentities and FindMe users.

Endpoints that support presence, such as Jabber Video, can publish their own status information. The VCS can also provide basic presence information on behalf of endpoints that do not support presence, including H.323 endpoints, as long as they have registered with an alias in the form of a URI.

If FindMe is enabled, the VCS can also provide presence information about FindMe users by aggregating the information provided by each presentity configured for that FindMe user.

The Presence application on the VCS supports the SIP-based SIMPLE standard and is made up of two separate services. These are the Presence Server and the Presence User Agent (PUA). These services can be enabled and disabled separately.

The Presence status pages provide information about the presentities who are providing presence information and the users who are requesting presence information on others. The status pages are organized into:

- Publishers
- Presentities
- Subscribers

Note that any one presentity can only subscribe to a maximum of 100 other presentities, and can only have a maximum of 100 other presentities subscribed to it.

Presence is supported by clustering. For specific information about how Presence information is managed across peers in a cluster, see Clustering and Presence [p.191].

Presence Server

The Presence Server application on the VCS is responsible for managing the presence information for all presentities in the SIP domains for which the VCS is authoritative. The Presence Server can manage the presence information for locally registered endpoints and presentities whose information has been received via a SIP proxy (such as another VCS).

The Presence Server is made up of the following services, all of which are enabled (or disabled) simultaneously when the Presence Server is enabled (or disabled):

- **Publication Manager**: receives PUBLISH messages, which contain the status information about a presentity, and writes this information to the Presence Database. PUBLISH messages are generated by presence-enabled endpoints and by the Presence User Agent (PUA).
- **Subscription Manager**: handles SUBSCRIBE messages, which request information about the status of a presentity. Upon receipt of a SUBSCRIBE message, the Subscription Manager sends a request to the Presentity Manager for information about that presentity, and forwards the information that is returned to the subscriber. The Subscription Manager also receives notifications from the Presentity Manager when a presentity's status has changed, and sends this information to all subscribers.
- **Presentity Manager**: an interface to the Presence Database. It is used to support VCS features such as FindMe and the PUA, where the presence information provided by a number of different devices must be

aggregated in order to provide an overall presence status for one particular presentity. When the Presentity Manager receives a request from the subscription manager for information on a presentity, it queries the Presence Database for all information available on all the endpoints associated with that particular presentity. The Presentity Manager then aggregates this information to determine the presentity's current status, and returns this to the Subscription Manager.

- **Presence Database**: stores current presence information received in the form of PUBLISH messages. Also sends NOTIFY messages to the Presentity Manager to inform it of any changes.

Presence and device authentication

The Presence Server accepts presence PUBLISH messages only if they have already been authenticated:

- The authentication of presence messages by the VCS is controlled by the authentication policy setting on the Default Subzone (or relevant alternative subzone) if the endpoint is registered (which is the usual case), or by the authentication policy setting on the Default Zone if the endpoint is not registered.
- The relevant **Authentication policy** must be set to either *Check credentials* or *Treat as authenticated*, otherwise PUBLISH messages will fail, meaning that endpoints will not be able to publish their presence status.

See Presence and authentication policy [p.139] for more information.

Presence User Agent (PUA)

Endpoints that do not support presence can have status published on their behalf by the VCS. The service that publishes this information is called the Presence User Agent (PUA).

The PUA takes information from the local registration database and the call manager and determines, for each endpoint that is currently locally registered, whether or not it is currently in a call. The PUA then provides this status information via a PUBLISH message.

For the PUA to successfully provide presence information about a locally registered endpoint:

- The endpoint must be registered with an alias in the form of a URI.
- The domain part of the URI must be able to be routed to a SIP registrar that has a presence server enabled. (This could be either the local Presence Server, if enabled, or another Presence Server on a remote system.)

When enabled, the PUA generates presence information for all endpoints registered to the VCS, including those which already support presence. The status information provided by the PUA is either:

- *online* (registered but not in a call)
- *in call* (registered and currently in a call)

Aggregation of presence information

When enabled, the PUA generates presence information for all endpoints registered to the VCS, including those which already support presence. However, endpoints that support presence may provide other, more detailed status, for example away or do not disturb. For this reason, information provided by the PUA is used by the Presentity Manager as follows:

- Where presence information is provided by the PUA and one other source, the non-PUA presence information will always be used in preference to the PUA presence information. This is because it is assumed that the other source of information is the presentity itself, and this information is more accurate.

- Where presence information is provided by the PUA and two or more other sources, the Presence Server will aggregate the presence information from all presentities to give the "highest interest" information, e.g. *online* rather than *offline*, and *in call* rather than *away*.
- If no information is being published about an endpoint, either by the endpoint itself or by the PUA, the endpoint's status will be *offline*. If the PUA is enabled, the *offline* status indicates that the endpoint is not currently registered.

FindMe presence

When the Presentity Manager receives a request for information about the presences of a FindMe alias, it looks up the presence information for each endpoint that makes up that FindMe alias. It then aggregates this information as follows:

- If the FindMe alias is set to *Individual* mode, if any one of the endpoints making up that FindMe is in a call the FindMe presentity's status will be reported as *in call*.
- If the FindMe alias is set to *Group* mode, if any one of the endpoints is online (i.e. not in call or offline) then the FindMe presentity's status will be reported as *online*.

Registration refresh period

The PUA will update and publish presence information on receipt of:

- a registration request (for new registrations)
- a registration refresh (for existing registrations)
- a deregistration request
- call setup and cleardown information

For non-traversal H.323 registrations the default registration refresh period is 30 minutes. This means that when the PUA is enabled on a VCS with existing registrations, it may take up to 30 minutes before an H.323 registration refresh is received and *available* presence information is published for that endpoint.

It also means that if an H.323 endpoint becomes unavailable without sending a deregistration message, it may take up to 30 minutes for its status to change to *offline*. To ensure more timely publication of presence information for H.323 endpoints, you should decrease the H.323 registration refresh period (using **Configuration > Protocols > H.323 > Gatekeeper > Time to live**).

The default registration refresh period for SIP is 60 seconds, so it will take no more than a minute for the PUA to publish updated presence information on behalf of any SIP endpoints.

Configuring Presence

The **Presence** page (**Applications > Presence**) allows you to enable and configure Presence services on the VCS.

These services can be enabled and disabled separately from each other, depending on the nature of your deployment. Both are disabled by default.

Note that **SIP mode** must be enabled for the Presence services to function.

Presence User Agent (PUA)

The PUA provides presence information on behalf of registered endpoints.

- *Enabled*: if the PUA is enabled, it will publish presence information for all locally registered endpoints, whether or not those endpoints are also publishing their own presence information. Information published by the PUA will be routed to a Presence Server acting for the endpoint's domain. This could be the local Presence Server, or (if this is disabled) a Presence Server on another system that is authoritative for that domain.
- *Disabled*: if the PUA is disabled, only those endpoints that support presence will publish presence information. No information will be available for endpoints that do not support presence.

You can also configure the **Default published status for registered endpoints**. This is the presentity status published by the Presence User Agent for registered endpoints when they are not "In-Call". The options are either *Online* or *Offline*. Note that:

- If this is set to *Online*, any permanently registered video endpoints and FindMe entries that include those endpoints will appear as permanently "Online".
- The status of non-registered endpoints always appears as "Offline".
- "Online" status appears as "Available" in Lync clients.

Presence Server

The Presence Server manages the presence information for all presentities in the SIP domains for which the VCS is authoritative.

- *Enabled*: if the local Presence Server is enabled, it will process any PUBLISH messages intended for the SIP domains for which the local VCS is authoritative. All other PUBLISH messages will be proxied on in accordance with the VCS's SIP routing rules. Note that SIP routes are configured using the CLI only.
  - The Presence Server requires that any messages it receives have been pre-authenticated (the Presence Server does not do its own authentication challenge).
    You must ensure that the subzone through which PUBLISH messages are being received has its **Authentication policy** is set to either *Check credentials* or *Treat as authenticated*, otherwise the messages will be rejected.
- *Disabled*: if the local Presence Server is disabled, the VCS will proxy on all PUBLISH messages to one or more of its neighbor zones in accordance with its locally configured call routing rules. The local VCS will do this regardless of whether or not it is authoritative for the presentity's domain. If one of these neighbors is authoritative for the domain, and has a Presence Server enabled, then that neighbor will provide presence information for the presentity.

Regardless of whether or not the Presence Server is enabled, the VCS will still continue to receive PUBLISH messages if they are sent to it from any of the following sources:

- locally registered endpoints that support presence
- the local PUA (if enabled)
- remote SIP Proxies

Note that Presence Server is automatically enabled when the **Starter Pack** option key is installed.

Recommendations

- **VCS Expressway and VCS Control**: the recommended configuration for a VCS Expressway when acting as a traversal server for a VCS Control is to enable the PUA and disable the Presence Server on the VCS Expressway, and enable the Presence Server on the VCS Control. This will ensure that all PUBLISH messages generated by the PUA are routed to the VCS Control.

- **VCS neighbors**: if you have a deployment with two or more VCSs neighbored together, you are recommended to enable only one presence server per domain. This will ensure a central source of information for all presentities in your network.
- **VCS clusters**: for information about how Presence works within a cluster, see Clustering and Presence [p.191].

Note: any defined transforms also apply to any Publication, Subscription or Notify URIs handled by the Presence Services.

B2BUA (back-to-back user agent) overview

A B2BUA operates between both endpoints of a SIP call and divides the communication channel into two independent call legs. Unlike a proxy server, the B2BUA maintains complete state for the calls it handles. Both legs of the call are shown as separate calls on the **Call status** and **Call history** pages.

B2BUA instances are hosted on the VCS. They are used in the following scenarios:

- to apply media encryption policy; this usage does not require any explicit B2BUA configuration
- to support ICE messaging; the only B2BUA-related configuration required is to define the set of TURN servers required to support ICE calls
- to route SIP calls between the VCS and a Microsoft Edge Server; this requires the manual configuration of the Microsoft Lync B2BUA and the set of TURN servers available for use by the B2BUA

Configuring B2BUA TURN servers

The **B2BUA TURN servers** page (**Applications > B2BUA > B2BUA TURN servers**) is used to configure the set of TURN servers available for use by a B2BUA instance. The page lists all the currently configured TURN servers and lets you create, edit and delete TURN servers.

The B2BUA chooses which TURN server to offer via random load-balancing between all of the available servers. There is no limit to the number of servers that can be configured for the B2BUA to choose from.

To use these TURN servers with the Microsoft Lync B2BUA, you must enable **Offer TURN services** on the Lync B2BUA configuration page. They are used automatically by the B2BUA instance used when ICE messaging is enabled for a zone or subzone.

The configurable options are:

Field	Description	Usage tips
TURN server address	The IP address of a TURN server to offer when establishing ICE calls (for example, with a Microsoft Lync Edge server).	The TURN server must be RFC 5245 compliant, for example a VCS Expressway TURN server.
TURN server port	The listening port on the TURN server. Default is 3478.	
Description	A free-form description of the TURN server.	
TURN services username and **password**	The username and password that are required to access the TURN server.	

If the TURN server is running on a Large VCS Expressway, you can make use of its scaling capabilities by specifying additional address/port combinations.

Microsoft Lync B2BUA

The Microsoft Lync back-to-back user agent (Lync B2BUA) on the VCS is used to route SIP calls between the VCS and a Microsoft Lync Server.

It provides interworking between Microsoft ICE (used by Lync clients) and media for communications with standard video endpoints. It also provides call hold, call transfer and Multiway support for calls with Lync clients, and can share FindMe presence information with Lync.

The setting up of the Lync B2BUA includes the following tasks:

- Configuring and enabling the B2BUA for Microsoft Lync communications.
- Configuring the transcoders that may be used by the B2BUA and any policy rules used to control routing through them (this is optional and are typically only used with Lync 2010).
- Defining the B2BUA's trusted hosts — the devices that may send signaling messages to the B2BUA.
- Defining the set of TURN servers available for use by the B2BUA when establishing ICE calls.
- Setting up search rules to route calls to the Lync domain via the B2BUA — when the B2BUA is enabled a non-configurable neighbor zone (named "**To Microsoft Lync server via B2BUA**") is automatically created; this zone must be selected as the target zone of the search rules.

A service restart is sometimes required to enable certain configuration changes to the Lync B2BUA to take effect. A system alarm is raised if a service restart is necessary.

Microsoft Lync 2010

The **Microsoft Interoperability** option key must be installed to enable encrypted calls to and from Microsoft Lync 2010 Server (for both native SIP calls and calls interworked from H.323). It is also required by the B2BUA when establishing ICE calls to Lync 2010 clients.

The B2BUA can use the Cisco AM GW to transcode between standard codecs (such as H.264) and Microsoft RT Video and RT Audio to allow high definition calls between Microsoft Lync 2010 clients and Cisco endpoints.

Microsoft Lync 2013

The B2BUA provides interworking between standard H.264 AVC and Lync 2013's H.264UC SVC codec. You can still configure the B2BUA to use Cisco AM GW transcoders with Lync 2013, but it is not necessary and we recommend that they are not deployed with Lync 2013.

Lync 2013 no longer supports H.263, so X8.1 or later software is required to interoperate successfully with Lync 2013. X7.2 or earlier software will work with Lync 2013 only if calls are routed through a Cisco AM GW transcoder.

The **Microsoft Interoperability** option key is required for all types of communication with Lync 2013.

Usage features and limitations

- The Lync B2BUA has a maximum simultaneous call capability of 100 calls (for all system sizes, including Large systems); however, calls that use transcoder resources count as 2 calls.

- If a call is routed through the Lync B2BUA, the B2BUA always takes the media and always remains in the signaling path. The call component that is routed through the B2BUA can be identified in the call history details as having a component type of *Microsoft Lync B2BUA*.
- The Lync B2BUA does not consume any call licenses in addition to the license required by the leg of the call between the endpoint and the VCS.
- If all configured transcoders reach their capacity limits, any calls that would normally route via a transcoder will not fail; the call will still connect as usual but will not be transcoded.
- The Lync B2BUA supports multiple TURN servers. TURN servers are recommended for calls traversing a Microsoft Lync Edge server.
- Bandwidth controls can be applied to the leg of the call between the endpoint and the B2BUA, but cannot be applied to the B2BUA to Microsoft Lync leg of the call. However, as the B2BUA forwards the media it receives without any manipulation, any bandwidth controls applied to the VCS to B2BUA leg in effect also controls the B2BUA to Lync leg implicitly.
- The non-configurable neighbor zone (named "**To Microsoft Lync server via B2BUA**") that connects the VCS to the Lync B2BUA uses a special zone profile of *Microsoft Lync* — this profile is only used by the Lync B2BUA and cannot be selected against any manually configured zones.

For more information about configuring VCS and Microsoft Lync see:

- Microsoft Lync B2BUA port reference [p.424]
- *Microsoft Lync and VCS Deployment Guide*
- *Microsoft Lync 2010, Cisco AM GW and VCS Deployment Guide*

Configuring the Microsoft Lync B2BUA

The **Microsoft Lync B2BUA configuration** page (**Applications > B2BUA > Microsoft Lync > Configuration**) is used to enable and configure the B2BUA's connection to Microsoft Lync devices.

The configurable options are:

Field	Description	Usage tips
Configuration section:		
Microsoft Lync B2BUA	Enables or disables the Microsoft Lync B2BUA.	
Lync signaling destination address	The IP address or Fully Qualified Domain Name (FQDN) of the Hardware Load Balancer, Director or Front End Processor to which the VCS sends the signaling messages.	You must also configure the IP addresses of the trusted hosts. These are the Lync devices that may send signaling messages to the VCS.
Lync signaling destination port	The IP port on the Hardware Load Balancer, Director or Front End Processor to which the VCS sends the signaling messages. Default port is 5061.	
Lync signaling transport	The transport type used for connection to the Microsoft Lync server. The default is *TLS*.	
Capabilities section:		

Field	Description	Usage tips
Register FindMe users as clients on Lync	Controls whether to register FindMe users to the Microsoft Lync server so that it can forward calls to FindMe aliases and share FindMe presence information. Default is *Yes*.	This feature only applies if FindMe is enabled. Note that Lync only allows FindMe users to register if the FindMe ID being registered is a valid user in the Lync Active Directory (in the same way that Lync users can only register if they have a valid account enabled in the Lync AD).
Lync domain	The SIP domain in use on the Microsoft Lync server. This must be selected from one of the SIP domains already configured on the VCS.	Only FindMe names with this domain will be registered to Lync.
Transcoders section:		
Enable transcoders for this B2BUA	Controls whether calls may be routed through a transcoder.	You should enable this option if you need to use a transcoder such as the Cisco TelePresence Advanced Media Gateway to transcode between standard codecs (such as H.264) and Microsoft RT Video and RT Audio.
Port on B2BUA for transcoder communications	The IP port used on the B2BUA for communicating with the transcoders. Default is 65080.	All transcoder communications are carried out over TLS.
Use transcoder policy rules	Specifies whether the transcoder policy rules are used to control access to the transcoders. Default is No.	If **Enable transcoders for this B2BUA** is *Yes*, then all calls are routed via the transcoders by default. If transcoder resources need to be reserved for specific types of calls, you can use this option to limit the types of calls that are routed via the transcoders. Set this option to *Yes* and then define the required policy rules.
TURN section:		
Offer TURN services	Controls whether the B2BUA offers TURN services. Default is *No*.	This is recommended for calls traversing a Microsoft Lync Edge server. To configure the associated TURN servers, click **Configure B2BUA TURN servers**.
Advanced settings: you should only modify the advanced settings on the advice of Cisco customer support.		

Field	Description	Usage tips
Encryption	Controls how the B2BUA handles encrypted and unencrypted call legs. *Required*: both legs of the call must be encrypted. *Auto*: encrypted and unencrypted combinations are supported. The default is *Auto*.	A call via the B2BUA comprises two legs: one leg from the B2BUA to a standard video endpoint, and one leg from the B2BUA to the Lync client. Either leg of the call could be encrypted or unencrypted. A setting of *Auto* means that the call can be established for any of the encrypted and unencrypted call leg combinations. Thus, one leg of the call could be encrypted while the other leg could be unencrypted.
B2BUA media port range start/end	The port range used by the B2BUA for handling media. Default range is 56000–57000.	Ensure that the port range does not overlap with other port ranges used by this VCS or this VCS's TURN server.
Hop count	Specifies the Max-Forwards value to use in SIP messages. Default is 70.	
Session refresh interval	The maximum time allowed between session refresh requests for SIP calls. Default is 1800 seconds.	For further information see the definition of *Session-Expires* in RFC 4028.
Minimum session refresh interval	The minimum value the B2BUA will negotiate for the session refresh interval for SIP calls. Default is 500 seconds.	For further information see the definition of *Min-SE header* in RFC 4028.
Port on B2BUA for VCS communications	The port used on the B2BUA for communicating with the VCS. Default is 65070.	
Port on B2BUA for Lync call communications	The port used on the B2BUA for call communications with the Microsoft Lync server. Default is 65072.	

Configuring the B2BUA's trusted hosts

The **B2BUA trusted hosts** page (**Applications > B2BUA > Microsoft Lync > B2BUA trusted hosts**) is used to specify the devices that may send signaling messages to the Lync B2BUA.

The B2BUA only accepts messages from devices whose IP address is included in the list of trusted hosts.

Note that trusted host verification only applies to calls initiated by Lync that are inbound to the VCS video network. It is not necessary to configure trusted hosts if calls are only ever to be initiated from the VCS video network.

The VCS has a limit of 25 trusted hosts. If there are more than 25 trusted hosts, the VCS raises an alarm. You can work around this limit by adding another "Lync gateway" VCS, or by pointing some of the Lync servers to a Lync proxy and then trusting the proxy instead.

The configurable options are:

Field	Description	Usage tips
Name	An optional free-form description of the trusted host device.	The name is not used as part of the "trusted" criteria. It is provided only to help distinguish between multiple devices, rather than having to rely on their IP addresses.
IP address	The IP address of the trusted host device.	
Type	The type of device that may send signaling messages to the B2BUA. *Lync device*: this includes Hardware Load Balancers, Directors and Front End Processors *Transcoder*: a transcoder device such as a Cisco TelePresence Advanced Media Gateway	

Configuring transcoder policy rules

The **Microsoft Lync B2BUA transcoder policy rules** page (**Applications > B2BUA > Microsoft Lync > Transcoder policy rules**) is used to define the rules that control which Lync B2BUA calls are routed via a transcoder.

If **Enable transcoders for this B2BUA** (configured on the **Microsoft Lync B2BUA configuration** page) is *Yes*, then all calls are routed via the transcoders by default. If transcoder resources need to be reserved for specific types of calls then you can specify rules to limit the types of calls that are routed via the transcoders.

- The rules on this page are only applied if **Use transcoder policy rules** (also configured on the **Microsoft Lync B2BUA configuration** page) is set to *Yes*.
- A rule is applied if it matches either the source or destination alias of a call.
- If the aliases associated with a call do not match any of the policy rules, the call will be routed via the transcoder. Therefore you may want to consider having a general low priority rule with a regex pattern match for all aliases that denies transcoder resources, and then have more specific rules with a higher priority that define the participants that are allowed to use the transcoder resources.

The page lists all the currently configured rules and lets you create, edit, delete, enable and disable rules. Note that you can click on a column heading to sort the list, for example by **Rule name** or **Priority**.

The configurable options are:

Field	Description	Usage tips
Name	The name assigned to the rule.	
Description	An optional free-form description of the rule.	The description appears as a tooltip if you hover your mouse pointer over a rule in the list.
Priority	Sets the order in which the rules are applied. The rules with the highest priority (1, then 2, then 3 and so on) are applied first.	Multiple rules with the same priority are applied in configuration order. For clarity you are recommended to use unique priority settings for each rule.

Field	Description	Usage tips
Pattern type	The way in which the **Pattern string** must match either the source or destination alias of the call. *Exact*: the entire string must exactly match the alias character for character. *Prefix*: the string must appear at the beginning of the alias. *Suffix*: the string must appear at the end of the alias. *Regex*: treats the string as a regular expression.	You can test whether a pattern matches a particular alias and is transformed in the expected way by using the Check pattern tool (**Maintenance > Tools > Check pattern**).
Pattern string	The pattern against which the alias is compared.	
Action	The action to take if the source or destination alias of the call matches this policy rule. *Allow*: the call can connect via the transcoder. *Deny*: the call can connect but it will not use transcoder resources.	
State	Indicates if the rule is enabled or not.	Use this setting to test configuration changes, or to temporarily disable certain rules. Any disabled rules still appear in the rules list but are ignored.

Configuring B2BUA transcoders

Transcoders are used to convert digital media from one format to another. The only transcoder currently supported by the Lync B2BUA is the Cisco TelePresence Advanced Media Gateway (Cisco AM GW).

The B2BUA can use the Cisco AM GW to transcode between standard codecs (such as H.264) and Microsoft RT Video and RT Audio to allow high definition calls between Microsoft Lync clients and Cisco endpoints.

The **Transcoders** page (**Applications > B2BUA > Microsoft Lync > Transcoders**) is used to manage the set of transcoders available to the B2BUA.

- Multiple transcoders can be configured for load balancing purposes; the B2BUA automatically manages which transcoder to use.
- The status of each transcoder is shown, this includes:
  - whether the transcoder is accessible or not
  - the number of available connections; note that Cisco AM GW calls require 2 connections per call
- You can use the B2BUA configuration page to control whether the B2BUA uses transcoder resources and whether specific policy rules are used to filter which calls are allowed to be routed through the transcoders. Note that the B2BUA can operate without any associated transcoders (calls will still connect but will not be transcoded).

The configurable options are:

Field	Description	Usage tips
Name	An optional free-form description of the transcoder.	

Field	Description	Usage tips
Address	The IP address or Fully Qualified Domain Name (FQDN) of the transcoder.	If you have several transcoders you are recommended to either use their IP addresses or to give each device a different FQDN. You may encounter problems if you use an FQDN that resolves to multiple transcoders (via DNS-based load balancing). This is because the B2BUA will first use DNS to discover the number of available ports on a transcoder, and then use DNS again to route a call to the transcoder. If the DNS lookup can resolve to different transcoders there is no guarantee that the call will be directed to the same transcoder that provided the resource information.
Port	The listening port on the transcoder.	

Restarting the B2BUA service

The **B2BUA service restart** page (**Applications > B2BUA > Microsoft Lync > B2BUA service restart**) is used to restart the Lync B2BUA service.

A restart is sometimes required to enable certain configuration changes to the B2BUA to take effect. A system alarm will be raised if a service restart is necessary.

Note that this function only restarts the B2BUA service; it does not restart the VCS. However, restarting the service will cause any active calls being managed by the B2BUA to be lost.

To restart the B2BUA service:

1. Go to **Applications > B2BUA > Microsoft Lync > B2BUA service restart**.
2. Check the number of active calls currently in place.
3. Click **Restart service**.

The service should restart after a few seconds. The status of the B2BUA service is displayed on the B2BUA configuration page.

Clustered VCS systems

On a clustered VCS you have to restart the Lync B2BUA service on every peer. You are recommended to ensure the service is configured and running correctly on the master peer before restarting the B2BUA service on the other peers.

FindMe™

FindMe is a form of User Policy, which is the set of rules that determines what happens to a call for a particular user or group when it is received by the VCS.

The FindMe feature lets you assign a single FindMe ID to individuals or teams in your enterprise. By logging into their FindMe account, users can set up a list of locations such as "at home" or "in the office" and associate their devices with those locations. They can then specify which devices are called when their FindMe ID is dialed, and what happens if those devices are busy or go unanswered. Each user can specify up to 15 devices and 10 locations.

This means that potential callers can be given a single FindMe alias on which they can contact an individual or group in your enterprise — callers won't have to know details of all the devices on which that person or group might be available.

To enable this feature you must purchase and install the **FindMe** option key. Standard operation is to use the VCS's own FindMe manager. However, you can use an off-box FindMe manager; this feature is intended for future third-party integration.

End-user FindMe account configuration

From VCS version X7.1, the way that users can configure their FindMe settings depends upon whether or not the VCS is using Cisco TMS provisioning:

- If Cisco TMS provisioning is enabled:
  - Users manage their FindMe settings by logging into their FindMe account via Cisco TMS.
  - User account and FindMe data is provided by Cisco TMS to VCS via the TMS Provisioning Extension services.
- If you are using FindMe without Cisco TMS (known as "standalone FindMe") then users manage their FindMe settings by logging into their FindMe account via VCS.

See *FindMe Deployment Guide* for more details about setting up FindMe accounts.

How are devices specified?

When configuring their FindMe account, users are asked to specify the devices to which calls to their FindMe ID are routed.

It is possible to specify aliases and even other FindMe IDs as one or more of the devices. However, care must be taken in these situations to avoid circular configurations.

For this reason, we recommend that users specify the physical devices they want to ring when their FindMe ID is called by entering the alias with which that device has registered.

Principal devices

A FindMe user's account should be configured with one or more principal devices. These are the main devices associated with that account.

Users are not allowed to delete or change the address of their principal devices. This is to stop users from unintentionally changing their basic FindMe configuration.

Principal devices are also used by the VCS to decide which FindMe ID to display as a **Caller ID** if the same device address is associated with more than one FindMe ID. Only an administrator (and not FindMe users themselves) can configure which of a FindMe user's devices are their principal devices.

FindMe process overview

When the VCS receives a call for a particular alias it applies its User Policy as follows:

- It first checks to see if FindMe is enabled. If so, it checks if the alias is a FindMe ID, and, if it is, the call is forwarded to the aliases associated with the active location for that user's FindMe configuration.
- If FindMe is not enabled, or the alias is not a FindMe ID, the VCS continues to search for the alias in the usual manner.

Note that User Policy is invoked after any Call Policy configured on the VCS has been applied. See Call routing process [p.196] for more information.

Recommendations when deploying FindMe

- The FindMe ID should be in the form of a URI, and should be the individual's primary URI.
- Endpoints should not register with an alias that is the same as an existing FindMe ID. You can prevent this by including all FindMe IDs on the Deny List.

Example

Users at Example Corp. have a FindMe ID in the format **`john.smith@example.com`**. Each of the user's endpoints are registered with a slightly different alias that identifies its physical location. For example their office endpoint is registered with an alias in the format **`john.smith.office@example.com`** and their home endpoint as **`john.smith.home@example.com`**.

Both of these endpoints are included in the list of devices to ring when the FindMe ID is dialed. The alias **`john.smith@example.com`** is added to the Deny List, to prevent an individual endpoint registering with that alias.

Configuring FindMe

The **FindMe configuration** page (**Applications > FindMe**) is used to enable and configure FindMe User Policy.

Note that the **FindMe configuration** page can only be accessed if the **FindMe** option key is installed.

The configurable options are:

Field	Description	Usage tips
FindMe mode	Determines whether or not FindMe is enabled, and if a third-party manager is to be used. *Off*: disables FindMe. *On*: enables FindMe and uses the VCS's local FindMe manager. *Remote service*: enables FindMe and uses a FindMe manager located on an off-box system. This feature is intended for advanced deployments with third-party integrators.	Call Policy is always applied regardless of the FindMe mode. If you enable FindMe, you must ensure a **Cluster name** is specified (you do this on the Clustering page). Note that **FindMe mode** is automatically set to *On* when the **Starter Pack** option key is installed.
Caller ID	Determines how the source of an incoming call is presented to the callee. *Incoming ID*: displays the address of the endpoint from which the call was placed. *FindMe ID*: displays the FindMe ID associated with the originating endpoint's address.	Using *FindMe ID* means that if the recipient subsequently returns that call, all the devices associated with that FindMe account will be called. For H.323 calls placed through an ISDN gateway, the E.164 phone number associated with the FindMe account is signaled instead as that is a more appropriate number to dial when returning the call. Note that the ISDN gateway must be registered to the same VCS as the call recipient. The FindMe ID is only displayed if the source endpoint has been authenticated (or treated as authenticated). If it is not authenticated the Incoming ID is displayed. See About device authentication [p.127] for more details.
Restrict users from configuring their devices	Controls if users are restricted from adding, deleting or modifying their own devices. The default is *Off*.	By default FindMe users are allowed to configure further devices in addition to any principal or provisioned devices assigned to them by the system administrator. This setting can be used to stop users from adding their own devices and restrict them to being able to only maintain their locations and their associated devices. This setting only applies if you are using FindMe without Cisco TMS (known as "standalone FindMe").

Field	Description	Usage tips

Device creation message	Only applies when **FindMe mode** is *On*.
	The text entered here is displayed to users when they add a device to their FindMe configuration.
	A limited set of HTML markup is supported in the message which is previewed in the window at the bottom of the page when you click **Save**. The following tags (without any attributes) are allowed:
	`b i tt big small strike s u em strong cite dfn samp kbd var abbr acronym sub sup ins del br`
	`<a href="…">` is also supported, but the URL can only contain A-Z 0-9, dot, "?" "=" and "%"; note that the URL is relative to the current page so you must prefix it with, for example, http:// if you want to refer to an external site.
		It can be used to provide information about how to format the device address or number, for example any dial prefixes that must be included.
		An example message could be:
		`Phone numbers: use the prefix <b>9</b>`
		`Endpoints: use the suffix <b>@video.test.com</b>`
		This setting only applies if you are using FindMe without Cisco TMS (known as "standalone FindMe").

The following options apply when **FindMe mode** is *Remote service*:

Field	Description
Protocol	The protocol used to connect to the remote service.
Address	The IP address or domain name of the remote service.
Path	The URL of the remote service.
Username	The username used by the VCS to log in and query the remote service.
Password	The password used by the VCS to log in and query the remote service.

If the **Starter Pack** option key is installed the Presence Server and FindMe are automatically enabled.

Management and storage of FindMe data

If you use FindMe without Cisco TMS (known as "standalone FindMe") or the **Starter Pack** option key is installed, the VCS's local database is used to store FindMe data and share it across all peers in a cluster.

If you use FindMe and want to use Cisco TMS to manage your FindMe data, you must configure Cisco TMSPE services to provide the VCS with FindMe data.

Note that if you have the **Device Provisioning** option key installed, you must use Cisco TMSPE services to obtain FindMe configuration data from Cisco TMS.

Cisco TMS provisioning

Cisco TMS provisioning is the mechanism through which the VCS and Cisco TMS share FindMe and device provisioning data. The shared data includes:

- user account, device and phone book data that is used by the VCS to service provisioning requests from endpoint devices
- FindMe account configuration data that is used by the VCS to provide FindMe services

The **FindMe** and **Device Provisioning** option keys must be installed on the VCS for it to provide FindMe and provisioning services.

As from version X8.1, the VCS supports only the Cisco TelePresence Management Suite Provisioning Extension (Cisco TMSPE) services to provide the VCS with provisioning and FindMe data. In this mode all provisioning and FindMe data is managed and maintained exclusively within Cisco TMS.

Size limitations for clusters and provisioning

A VCS cluster of any size supports up to:

- 10,000 FindMe accounts
- 10,000 users for provisioning
- 200,000 phonebook entries

Note that:

- Small/Medium systems can support up to 2,500 device registrations per peer, subject to a maximum of 10,000 registrations per cluster. Typically this means one device per FindMe account.
- Large systems can support up to 5,000 device registrations per peer (with a maximum of 20,000 registrations per cluster). However, you are still limited to 10,000 FindMe accounts/users and 10,000 provisioned devices per cluster.

If you need to provision more than 10,000 devices, your network will require additional VCS clusters with an appropriately designed and configured dial plan.

See *Cisco TMS Provisioning Extension Deployment Guide* for full information about how to configure provisioning in Cisco TMS and VCS.

Cisco TMSPE services

When TMS provisioning is enabled, the VCS uses the following Cisco TMSPE services (which are hosted on Cisco TMS) to provide the VCS (or VCS cluster) with provisioning and FindMe data:

Service	Description
User Preference	The data provided by the User Preference service enables the VCS to configure a device with settings that pertain to a specific user (a user is essentially a SIP URI). Devices such as Jabber Video are configured entirely using this service. This service also provides connection details to a TURN server (typically the VCS Expressway).
FindMe	The FindMe service provides the details of users' FindMe accounts, in particular the locations and devices associated with each FindMe ID. This allows the VCS to apply its User Policy, and to be able to change a caller's source alias to its corresponding FindMe ID.

Service	Description
Phone books	The Phone books service provides the data that allows users to search for contacts within phone books. Access to phone books is controlled on a per user basis according to any access control lists that have been defined (within Cisco TMS).
Devices	The Devices service exchanges provisioning licensing information between the VCS and Cisco TMS. Information is exchanged every 30 seconds — the VCS is provided with the current number of free licenses available across the range of VCS clusters being managed by Cisco TMS, and the VCS updates Cisco TMS with the status of provisioning licenses being used by this VCS (or VCS cluster). If the Devices service is not active, the VCS's Provisioning Server will not be able to provision any devices.

The current status of the services is displayed on the TMS Provisioning Extension service status page.

- The VCS periodically polls the Cisco TMSPE services to ensure the data held on VCS is kept up to date. The polling interval can be defined for each service. In typical deployments you are recommended to use the default settings which provide frequent (every 2 minutes) updates to FindMe and user provisioning data, and daily updates to phone book data.
  If you have a cluster of VCSs, only one of the cluster peers maintains the physical connection to Cisco TMS. The data obtained from Cisco TMS is then shared between other peers in the cluster through the VCS's cluster replication mechanism.
- A full and immediate resynchronization of all data between the VCS and Cisco TMS can be triggered at any time by clicking **Perform full synchronization** (at the bottom of the of the **TMS Provisioning Extension services** page). Note that this will result in a temporary (a few seconds) lack of service on the VCS while the data is deleted and fully refreshed. If you only need to ensure that all of the latest updates within Cisco TMS have been supplied to the VCS then click **Check for updates** instead.

You are recommended to use Cisco TMS to make any changes to the Cisco TMSPE services' configuration settings. You can configure the services on the VCS through the **TMS Provisioning Extension services** page, but any changes made to the settings via this page will not be applied within Cisco TMS.

Using FindMe without Cisco TMS

If you use FindMe without TMS (known as "standalone FindMe"), then all FindMe account information is stored and managed locally on the VCS. See *FindMe Deployment Guide* for more information.

VCS Provisioning Server

The VCS Provisioning Server provides provisioning-related services to provisioned devices, using data supplied by Cisco TMS through the Cisco TMS provisioning mechanism. The server only operates if the **Device Provisioning** option key is installed.

As from version X8.1, the VCS supports only the Cisco TelePresence Management Suite Provisioning Extension (Cisco TMSPE) services to provide the VCS with provisioning and FindMe data. In this mode all provisioning and FindMe data is managed and maintained exclusively within Cisco TMS.

Provisioning server status

Comprehensive status information can be found under the VCS's (**Status > Applications > TMS Provisioning Extension services**) menu options.

Provisioning licenses

There is a limit to the number of devices that can be provisioned concurrently by the Provisioning Server. VCS and Cisco TMS manage the number of available provisioning licenses by exchanging information through the Cisco TMSPE Devices service. If the Devices service is not active, the VCS's Provisioning Server will not be able to provision any devices.

The VCS is provided with the current number of free licenses available across the range of VCS clusters being managed by Cisco TMS, and the VCS updates Cisco TMS with the status of provisioning licenses being used by this VCS (or VCS cluster). License limits can be managed at a per device type basis.

- Go to **Status > Applications > TMS Provisioning Extension services > Device requests** to see a summary status of the provisioning licenses that are available within your system.
- Go to **Status > Applications > TMS Provisioning Extension services > Provisioned device status** to see a list of all of the devices that have submitted provisioning requests to the Provisioning Server.

Note that some devices, including Jabber Video 4.x, do not inform the VCS when they sign out (unsubscribe) from being provisioned. The VCS manages these devices by applying a 1 hour timeout interval before releasing the license.

Provisioning and device authentication

The Provisioning Server requires that any provisioning or phone book requests it receives have already been authenticated at the zone or subzone point of entry into the VCS. The Provisioning Server does not do its own authentication challenge and will reject any unauthenticated messages.

See Device provisioning and authentication policy [p.137] for more information.

Starter Pack provisioning

The VCS's Starter Pack Provisioning Server provides basic device provisioning, including phone book support, for a range of endpoint device types without the need for Cisco TMS.

The **Starter Pack** option key must be installed to use basic device provisioning. It cannot be used in combination with device provisioning managed through TMS. Note that the **Starter Pack** option key is designed for single box deployments and is only available as a pre-configured factory setting.

Starter Pack

The Starter Pack is suitable for small enterprises. It provides basic VCS functionality and includes Expressway and FindMe functionality automatically.

The following license restrictions apply by default:

- 50 registrations
- 5 traversal calls (extra traversal call license option keys can be added if required)
- 900 TURN relays

Note that:

- non-traversal calls are supported (a traversal license is used when one occurs)
- the Starter Pack has a maximum limit of 25 calls

When the **Starter Pack** option key is installed the Presence Server and FindMe are automatically enabled.

Configuring Starter Pack provisioning

The **Provisioning** page (**Applications > Provisioning**) is used to configure the VCS's Provisioning Server when the VCS is running in Starter Pack mode.

The Starter Pack Provisioning Server provides basic device provisioning and is automatically enabled when the **Starter Pack** option key is installed. It can be monitored on the Starter Pack status page.

Bandwidth limits

The **Bandwidth limits** section lists each supported device type and lets you choose whether or not to enable the provisioning of bandwidth limits for that device. If you enable the bandwidth limits option for a device type you can then configure the maximum incoming and outgoing bandwidth (in kbps) values to set on the provisioned devices.

ClearPath

The **ClearPath** section lists each supported device type and lets you choose whether or not to enable the provisioning of ClearPath for that device.

Provisioning users

To provision individual users, you must set up FindMe accounts. When you configure a FindMe account, you can choose the devices to provision for that user. The FindMe account is also used to configure the user's FindMe settings.

See *VCS Starter Pack Express Deployment Guide* for full details on setting up Starter Pack provisioning.

User accounts

This section provides information about how to configure administrator and FindMe user accounts, and how to display the details of all active administrator and FindMe sessions.

About user accounts 284
Configuring password security 286
Configuring administrator accounts 287
Configuring remote account authentication using LDAP 289
Configuring FindMe accounts 295
Resetting forgotten passwords 298
Using the root account 299

About user accounts

The VCS has two types of user account for normal operation:

- **Administrator accounts**: used to configure the VCS.
- **FindMe accounts**: used by individuals in an enterprise to configure their FindMe profile. They can also be used to enable basic device provisioning when the **Starter Pack** option key is installed.

Note that FindMe account configuration via VCS does not apply if the VCS is using the TMS Provisioning Extension services to provide FindMe data.

Account authentication

Administrator and FindMe accounts must be authenticated before access is allowed to the VCS.

VCS can authenticate accounts either locally or against a remote directory service using LDAP (currently, only Windows Active Directory is supported), or it can use a combination of local and remotely managed accounts. The remote option allows administration groups to be set up in the directory service for all VCSs in an enterprise, removing the need to have separate accounts on each VCS.

See Configuring remote account authentication using LDAP [p.289] and *Authenticating VCS Accounts using LDAP Deployment Guide* for more information about setting up remote authentication.

If a remote source is used for either administrator or FindMe account authentication, you also need to configure the VCS with:

- appropriate LDAP server connection settings
- administrator groups and/or FindMe groups that match the corresponding group names already set up in the remote directory service to manage administrator and FindMe access to this VCS (see Configuring administrator groups [p.292] and Configuring FindMe groups [p.294])

The VCS can also be configured to use certificate-based authentication. This would typically be required if the VCS was deployed in a highly-secure environment.

Account types

Administrator accounts

Administrator accounts are used to configure the VCS.

- The VCS has a default **admin** local administrator account with full read-write access. It can be used to access the VCS using the web interface, the API interface or the CLI. Note that you cannot access the VCS via the default **admin** account if a *Remote only* authentication source is in use.
- You can add additional local administrator accounts which can be used to access the VCS using the web and API interfaces only.
- Remotely managed administrator accounts can be used to access the VCS using the web and API interfaces only.

You can configure the complexity requirements for local administrator passwords on the Password security page (**Users > Password security**). All passwords and usernames are case sensitive.

Note that:

- The Configuration Log records all login attempts and configuration changes made using the web interface, and can be used as an audit trail. This is particularly useful when you have multiple administrator accounts.
- More than one administrator session can be running at the same time. These sessions could be using the web interface, command line interface, or a mixture of both. This may cause confusion if each administrator session attempts to modify the same configuration settings - changes made in one session will overwrite changes made in another session.
- You can configure account session limits and inactivity timeouts (see Configuring system name and access settings [p.36]).
- If the system is in advanced account security mode, a **Login history** page is displayed immediately after logging in. It shows the recent activity of the currently logged in account.

See the Configuring administrator accounts [p.287] section for more information.

FindMe accounts

FindMe accounts are used by individuals in an enterprise to configure the devices and locations on which they can be contacted through their FindMe ID.

Each FindMe account is accessed using a username and password.

- If local FindMe account authentication is selected, each FindMe account must be created locally by the VCS administrator.
- If remote FindMe account authentication is selected, the VCS administrator must set up FindMe groups to match the corresponding group names in the remote directory service. Note that only the username and password details are managed remotely. All other properties of the FindMe account, such as the FindMe ID, devices and locations are stored in the local VCS database.

See the Configuring FindMe accounts [p.295] section for more information about defining FindMe account details and their associated FindMe devices and locations, and for enabling basic **Starter Pack** provisioning.

We recommend that you use Cisco TMS if you need to provision a large number of FindMe accounts. See *Cisco TMS Provisioning Extension Deployment Guide* for more details on configuring FindMe and user accounts.

Root account

The VCS provides a root account which can be used to log in to the VCS operating system. The **root** account should not be used in normal operation, and in particular system configuration should not be conducted using this account. Use the **admin** account instead.

See the Using the root account [p.299] section for more information.

Note: remember to change the passwords for the **admin** and **root** accounts from their default values.

Configuring password security

The **Password security** page (**Users > Password security**) controls whether or not local administrator account passwords must meet a minimum level of complexity before they are accepted.

If **Enforce strict passwords** is set to *On*, all subsequently configured local administrator account passwords must conform to the following rules for what constitutes a strict password.

Configurable rules

The following rules apply by default but can be customized.

The password must contain at least 15 ASCII characters made up of at least:

- 2 numeric values ['0'..'9']
- 2 uppercase letters ['A'..'Z']
- 2 lowercase letters ['a'..'z']
- 2 special characters [such as '@' or '$']

You can also specify:

- the minimum number of the 4 character classes (numeric , lower case, upper case, and special characters) that must be present; use this setting if you want to mandate the use of 2-3 different character classes without requiring all of them to be present
- the maximum number of times the same character can be repeated consecutively; by default there is no restriction

Additional non-configurable rules

The following strict password rules always apply and cannot be configured. Passwords must not:

- be based on a dictionary word
- contain too many consecutive characters such as "abc" or "123"
- contain too few different characters
- be palindromes

If **Enforce strict passwords** is set to *Off*, no checks are made on administrator passwords.

Note that:

- Regardless of this setting, it is not possible to set a blank password for any administrator account.
- This setting affects local administrator account passwords only. It does not affect any other passwords used on the VCS such as in the local authentication database, LDAP server, external registration credentials, user account passwords, or administrator account passwords stored on remote credential directories.
- All passwords and usernames are case sensitive.

Configuring administrator accounts

The **Administrator accounts** page (**Users > Administrator accounts**) lists all the local administrator accounts that have been configured on the VCS, and lets you add, edit and delete accounts.

Default administrator account

The VCS has a default local administrator account with full *Read-write* access. This account is used to access the VCS using the web UI, the API interface or the CLI. Note that you can still access the VCS via the **admin** account even if a *Remote* authentication source is in use.

The username for this account is **admin** (all lower case) and the default password is TANDBERG (all upper case). You cannot delete the default administrator account or change its **admin** username, but you should change the password as soon as possible. Choose a strong password, particularly if administration over IP is enabled. The access level of the default admin account cannot be changed from *Read-write* but it is possible to disable its web and API access.

If you forget the password for the **admin** account, you can log in as another administrator account with read-write access and change the password for the **admin** account. If there are no other administrator accounts, or you have forgotten those passwords as well, you can still reset the password for the **admin** account providing you have physical access to the VCS. See Resetting forgotten passwords [p.298] for details.

Additional administrator accounts

You can add additional local administrator accounts, which can be used to access the VCS over the web and API interfaces, but not the CLI.

The configurable options are:

Field	Description	Usage tips
Name	The username for the administrator account.	Some names such as "root" are reserved. Local administrator account user names are case sensitive.
Access level	The access level of the administrator account: *Read-write*: allows all configuration information to be viewed and changed. This provides the same rights as the default **admin** account. *Read-only*: allows status and configuration information to be viewed only and not changed. Some pages, such as the **Upgrade** page, are blocked to read-only accounts. *Auditor*: allows access to the **Event Log**, **Configuration Log**, **Network Log**, **Alarms** and **Overview** pages only . Default: *Read-write*	The access permissions of the currently logged in user are shown in the system information bar at the bottom of each web page. The access level of the default **admin** account cannot be changed from *Read-write*.

Field	Description	Usage tips
Password	The password that this administrator will use to log in to the VCS.	All passwords on the VCS are encrypted, so you only see placeholder characters here. When entering passwords, the bar next to the **Password** field changes color to indicate the complexity of the password. You can configure the complexity requirements for local administrator passwords on the Password security page (**Users > Password security**). You cannot set blank passwords.
Web access	Determines whether this account is allowed to log in to the system using the web interface. Default: *Yes*	
API access	Determines whether this account is allowed to access the system's status and configuration using the Application Programming Interface (API). Default: *Yes*	This controls access to the XML and REST APIs by systems such as Cisco TMS.
State	Indicates if the account is enabled or disabled. Access will be denied to disabled accounts.	

Viewing active administrator sessions

The **Active administrator sessions** page (**Users > Active administrator sessions**) lists all administrator accounts that are currently logged in to this VCS.

It displays details of their session including their login time, session type, IP address and port, and when they last accessed this VCS.

You can terminate active web sessions by selecting the required sessions and clicking **Terminate session**.

You may see many sessions listed on this page if a zero **Session time out** value is configured. This typically occurs if an administrator ends their session by closing down their browser without first logging out of the VCS.

Login history

The **Login history** page is displayed immediately after logging in, when the system is in advanced account security mode. It shows the recent activity of the currently logged in account.

This session

This section shows the login date and time of the currently logged in account, and the IP address from where the login originated.

Previous sessions (for this account)

This section shows the date, time and source IP address of the last successful login for this account. If applicable it also shows details of the last failed login attempt for this account, and the number of failed login attempts since the last successful login.

Configuring remote account authentication using LDAP

The **LDAP configuration** page (**Users > LDAP configuration**) is used to configure an LDAP connection to a remote directory service for administrator account authentication. It can also provide user account authentication if you are using FindMe without Cisco TMS.

The configurable options are:

Field	Description	Usage tips
Remote account authentication: this section allows you to enable or disable the use of LDAP for remote account authentication.		
Administrator authentication source	Defines where administrator login credentials are authenticated. *Local only*: credentials are verified against a local database stored on the system. *Remote only*: credentials are verified against an external credentials directory. *Both*: credentials are verified first against a local database stored on the system, and then if no matching account is found the external credentials directory is used instead. The default is *Local only*.	*Both* allows you to continue to use locally-defined accounts. This is useful while troubleshooting any connection or authorization issues with the LDAP server. You cannot log in using a locally-configured administrator account, including the default **admin** account, if *Remote only* authentication is in use. Note: do not use *Remote only* if VCS is managed by Cisco TMS.
FindMe authentication source	Defines where FindMe account credentials are authenticated: *Remote*: credentials are verified against an external credentials directory (the VCS currently supports only Windows Active Directory). *Local*: credentials are verified against a local database stored on the VCS. The default is *Local*.	This option applies only if you are using FindMe without Cisco TMS.
LDAP server configuration: this section specifies the connection details to the LDAP server.		
FQDN address resolution	Defines how the LDAP server address is resolved. *SRV record*: DNS SRV record lookup. *Address record*: DNS A or AAAA record lookup. *IP address*: entered directly as an IP address. The default is *Address record*.	

Field	Description	Usage tips
Host name and **Domain** or **Server address**	The way in which the server address is specified depends on the **FQDN address resolution** setting: *SRV record*: only the **Domain** portion of the server address is required. *Address record*: enter the **Host name** and **Domain**. These are then combined to provide the full server address for the DNS address record lookup. *IP address*: the **Server address** is entered directly as an IP address.	If using TLS, the address entered here must match the CN (common name) contained within the certificate presented by the LDAP server.
Port	The IP port to use on the LDAP server.	Typically, non-secure connections use *389* and secure connections use *636*.
Encryption	Determines whether the connection to the LDAP server is encrypted using Transport Layer Security (TLS). *TLS*: uses TLS encryption for the connection to the LDAP server. *Off*: no encryption is used. The default is *TLS*.	When TLS is enabled, the LDAP server's certificate must be signed by an authority within the VCS's trusted CA certificates file. Click **Upload a CA certificate file for TLS** (in the **Related tasks** section) to go to the Managing the trusted CA certificate list [p.309] page.
Certificate revocation list (CRL) checking	Specifies whether certificate revocation lists (CRLs) are checked when forming a TLS connection with the LDAP server. *None*: no CRL checking is performed. *Peer*: only the CRL associated with the CA that issued the LDAP server's certificate is checked. *All*: all CRLs in the trusted certificate chain of the CA that issued the LDAP server's certificate are checked. The default is *None*.	If you are using revocation lists, any required CRL data must also be included within the CA certificate file.
Authentication configuration: this section specifies the VCS's authentication credentials to use when binding to the LDAP server.		
Bind DN	The distinguished name (case insensitive) used by the VCS when binding to the LDAP server. It is important to specify the DN in the order cn=, then ou=, then dc=	Any special characters within a name must be escaped with a backslash as per the LDAP standard (*RFC 4514*). Do not escape the separator character between names. The bind account is usually a read-only account with no special privileges.
Bind password	The password (case sensitive) used by the VCS when binding to the LDAP server.	The maximum plaintext length is 60 characters, which is then encrypted.
SASL	The SASL (Simple Authentication and Security Layer) mechanism to use when binding to the LDAP server. *None*: no mechanism is used. *DIGEST-MD5*: the DIGEST-MD5 mechanism is used. The default is *DIGEST-MD5*.	Enable Simple Authentication and Security Layer if it is company policy to do so.

Field	Description	Usage tips
Bind username	Username of the account that the VCS will use to log in to the LDAP server (case sensitive). Only required if SASL is enabled.	Configure this to be the sAMAccountName; Security Access Manager Account Name (in AD this is the account's user logon name).
Directory configuration: this section specifies the base distinguished names to use when searching for account and group names.		
Base DN for accounts	The ou= and dc= definition of the Distinguished Name where a search for user accounts should start in the database structure (case insensitive). It is important to specify the DN in the order ou=, then dc=	This is for authentication of both administrator login and user login requests. The Base DN for accounts and groups must be at or below the dc level (include all dc= values and ou= values if necessary). LDAP authentication does not look into sub dc accounts, only lower ou= and cn= levels.
Base DN for groups	The ou= and dc= definition of the Distinguished Name where a search for groups should start in the database structure (case insensitive). It is important to specify the DN in the order ou=, then dc=	This is for authorization of an authenticated user to log in as an administrator or to log in to a user account. If no **Base DN for groups** is specified, then the Base DN for accounts will be used for both groups and accounts.

Checking the LDAP server connection status

The status of the connection to LDAP server is displayed at the bottom of the page.

State = Active

No error messages are displayed.

State = Failed

The following error messages may be displayed:

Error message	Reason / resolution
DNS unable to do reverse lookup	Reverse DNS lookup is required for SASL authentication.
DNS unable to resolve LDAP server address	Check that a valid DNS server is configured, and check the spelling of the LDAP server address.
Failed to connect to LDAP server. Check server address and port	Check that the LDAP server details are correct.
Failed to setup TLS connection. Check your CA certificate	CA certificate, private key and server certificate are required for TLS.
Failure connecting to server. Returned code<return code>	Other non-specific problem.
Invalid Base DN for accounts	Check **Base DN for accounts**; the current value does not describe a valid part of the LDAP directory.

Error message	Reason / resolution
Invalid server name or DNS failure	DNS resolution of the LDAP server name is failing.
Invalid bind credentials	Check **Bind DN** and **Bind password**, this error can also be displayed if SASL is set to *DIGEST-MD5* when it should be set to *None*.
Invalid bind DN	Check **Bind DN**; the current value does not describe a valid account in the LDAP director. This failed state may be wrongly reported if the **Bind DN** is 74 or more characters in length. To check whether there is a real failure or not, set up an administrator group on the VCS using a valid group name. If VCS reports “saved” then there is not a problem (the VCS checks that it can find the group specified). If it reports that the group cannot be found then either the **Bind DN** is wrong, the group is wrong or one of the other configuration items may be wrong.
There is no CA certificate installed	CA certificate, private key and server certificate are required for TLS.
Unable to get configuration	LDAP server information may be missing or incorrect.

Configuring administrator groups

The **Administrator groups** page (**Users > Administrator groups**) lists all the administrator groups that have been configured on the VCS, and lets you add, edit and delete groups.

Administrator groups only apply if remote account authentication is enabled.

When an administrator logs in to the VCS web interface, their credentials are authenticated against the remote directory service and they are assigned the access rights associated with the group to which the administrator belongs. If the administrator account belongs to more than one group, the highest level permission is assigned.

The configurable options are:

Field	Description	Usage tips
Name	The name of the administrator group. It cannot contain any of the following characters: / \ [ ] : ; | = , + * ? > < @ "	The group names defined in the VCS must match the group names that have been set up in the remote directory service to manage administrator access to this VCS.

Field	Description	Usage tips
Access level	The access level given to members of the administrator group: *Read-write*: allows all configuration information to be viewed and changed. This provides the same rights as the default **admin** account. *Read-only*: allows status and configuration information to be viewed only and not changed. Some pages, such as the **Upgrade** page, are blocked to read-only accounts. *Auditor*: allows access to the **Event Log**, **Configuration Log**, **Network Log**, **Alarms** and **Overview** pages only . *None*: no access is allowed. Default: *Read-write*	If an administrator belongs to more than one group, it is assigned the highest level permission for each of the access settings across all of the groups to which it belongs (any groups in a disabled state are ignored). See Determining the access level for accounts that belong in multiple groups [p.293] below for more information.
Web access	Determines whether members of this group are allowed to log in to the system using the web interface. Default: *Yes*	
API access	Determines whether members of this group are allowed to access the system's status and configuration using the Application Programming Interface (API). Default: *Yes*	This controls access to the XML and REST APIs by systems such as Cisco TMS.
State	Indicates if the group is enabled or disabled. Access will be denied to members of disabled groups.	If an administrator account belongs to more than one administrator group with a combination of both *Enabled* and *Disabled* states, their access will be *Enabled*.

Determining the access level for accounts that belong in multiple groups

If an administrator account belongs to more than one administrator group, the effective settings for **Access level**, **Web access** and **API access** will be the highest of each group to which the account belongs. Any groups in a disabled state are ignored.

For example, if the following groups were configured:

Group name	Access level	Web access	API access
Administrators	Read-write	-	-
Region A	Read-only	Yes	-
Region B	Read-only	-	Yes
Region C	Read-only	Yes	Yes

the following table shows examples of the access permissions that would be granted for accounts that belong in one or more of those groups:

Groups belonged to	Access permissions granted
Administrators and **Region A**	read-write access to the web interface but no API access

Groups belonged to	Access permissions granted
Administrators and **Region B**	read-write access to the API interface, but no web interface access
Administrators and **Region C**	read-write access to the web and API interfaces
Region A only	read-only access to the web interface and no API access

Configuring FindMe groups

The **FindMe groups** page (**Users > FindMe groups**) lists all the FindMe groups that have been configured on the VCS, and lets you add, edit and delete groups.

Note that this page does not apply if the VCS is using TMS Provisioning Extension services to provide FindMe account data; in this case, FindMe accounts are maintained through Cisco TMS.

- FindMe groups are only active when remote FindMe authentication is enabled.
- FindMe groups determine which access rights members of the group have after they have been successfully authenticated to use the VCS.

When a FindMe user logs in to the VCS their credentials are authenticated against the remote directory service and they are assigned the access rights associated with the group to which that user belongs. If the user account belongs to more than one group, the highest level permission is assigned.

The configurable options are:

Field	Description	Usage tips
Name	The name of the FindMe group. It cannot contain any of the following characters: / \ [ ] : ; | = , + * ? > < @ "	The group names defined in the VCS must match the group names that have been set up in the remote directory service to manage FindMe accounts.
State	Indicates if the group is enabled or disabled. *Enabled*: users can view and modify their personal FindMe details, devices and locations. *Disabled*: users are not allowed to log in to their account. Default: *Enabled*	

Configuring FindMe accounts

The **FindMe accounts** page (**Users > FindMe accounts**) lists all the FindMe accounts that have been configured on the VCS, and lets you add, edit and delete accounts.

Note that this page does not apply if the VCS is using TMS Provisioning Extension services to provide FindMe account data; in this case, FindMe accounts are maintained through Cisco TMS.

FindMe accounts are used by individuals in an enterprise to configure the devices and locations on which they can be contacted through their FindMe ID. Each FindMe account is accessed using a username and password.

- If local FindMe account authentication is selected, each FindMe account must be created locally by the VCS administrator.
- If remote FindMe account authentication is selected, the VCS administrator must set up FindMe groups to match the corresponding group names in the remote directory service.

Filtering the view

The **Filter** section lets you filter the set of records. Enter the word or phrase you want to search for and click **Filter**. Only those records that contain the word or phrase you entered are shown.

Configuring an account

Click **New** to set up a new account, or click **View/Edit** (or the username) to edit an existing FindMe account.

The configurable options for a FindMe account are:

Field	Description	Usage tips
Username	The account name. It is used (along with a password) by the user to log in to the VCS and configure their FindMe details. The username cannot be changed after the account has been created.	If remote authentication is enabled, the username defined in the VCS must match the username set up in the remote directory service.
Display name	A free-form display name for the user (rather than the user's **Username** or **FindMe ID**).	The **Display name** is used in phone books and as the caller display name in SIP calls.
Phone number	The numeric caller ID presented when making an outbound call through an ISDN gateway.	To allow call return, this number could be configured to route to the associated FindMe ID by mapping incoming numbers to the FindMe ID using ENUM, search rules or CPL. See *FindMe Deployment Guide* for more information.
FindMe ID	The FindMe alias — the dialable address — by which the user can be contacted.	The **FindMe ID** can be any string of up to 60 characters. However, not all endpoints are able to dial aliases with spaces or other non-alphanumeric characters so we recommend that these are not used in your FindMe IDs.

Field	Description	Usage tips
Principal device address	The address or alias of the user's first principal device. An administrator (or FindMe users themselves) can add more endpoint addresses after an account has been created.	After the account has been created any non-principal devices (including any devices added by FindMe users themselves) can be set as principal devices. This has the effect of stopping the user from being able to delete that device. To do this, click **Edit principal devices** from the **Edit FindMe account** page. If the **Starter Pack** option key is installed, there is a separate section for specifying the user's principal devices (see below).
Password	The password to be used, along with the **Username**, when logging into this account. You must confirm any new or modified password.	FindMe users can change their password after they have logged in. Note that passwords are case sensitive, and that the password fields are not shown if remote authentication is enabled.
FindMe type	Specifies if the account is for an individual person or a group of people, and affects how calls are diverted when endpoints in the user's primary list are busy. *Individual*: calls immediately divert if any primary endpoint is busy. *Group of people*: calls immediately divert only if all primary endpoints are busy.	If the **Starter Pack** option key is installed all FindMe IDs are created as *Individual* accounts.

You can control general FindMe behavior, including whether users are allowed to add their own devices, on the Configuring FindMe [p.276] page.

Principal devices (Starter Pack)

The **Principal devices** section is used to specify the principal devices that are associated with the FindMe profile and to enable provisioning for those devices. This section only displays if the **Starter Pack** option key is installed.

Principal devices are devices assigned to the profile by the system administrator and cannot be deleted by the FindMe user. Note that users can add other, non-principal, devices to their FindMe profiles.

To assign a principal device, select *On* for the relevant device type. The page will then display the URI that will be assigned for that user and device type. You can assign as many devices as required.

The device URI is based on a combination of the **Username**, **FindMe ID** and device type. It takes the format **`<username>.<device type>@<domain portion of FindMe ID>`**.

For example, if the **Username** is **`Alice.Smith`** and the **FindMe ID** is **`asmith@example.com`**, then the URI for an E20 device would be **`alice.smith.e20@example.com`**.

- Each selected device is automatically provisioned (with bandwidth limits and phone book information, for example) when that device registers to the VCS.
- You can specify an additional principal device by setting **Other device** to *On* and then specifying the required **URI** of the device. If required, you can add further non-principal devices by clicking **Edit user** from the **Edit FindMe account** page.

Note that the VCS only sends provisioning information to the pre-configured device types (Jabber Video, E20 and so on). Other principal devices added by the administrator or any other devices added by the FindMe user are not provisioned by the VCS.

If your system's authentication policy is configured to check credentials, then authentication credentials for the provisioned devices must be set up in the relevant credential store (typically the local database). The credential name must be the same as account username and the credential password must be the same as the password configured on the provisioned devices. See About device authentication [p.127] for more information.

Note: all device address URIs are converted to lower case.

Configuring a FindMe account's principal devices

The **Edit principal devices** page (**Users > FindMe accounts**, click **View/Edit** or the username to open the **Edit FindMe account** page, and then click **Edit principal devices**) is used to configure which of the user's devices are their principal devices associated with their FindMe ID.

Note that this page does not apply if the VCS is using TMS Provisioning Extension services to provide FindMe account data; in this case, FindMe accounts are maintained through Cisco TMS.

Users are not allowed to delete or change the address of their principal devices; they can only change the **Device name**. This is to stop users from unintentionally changing their basic FindMe configuration. Principal devices are also used by the VCS to decide which FindMe name to display as a **Caller ID** if the same device address is associated with more than one account.

The page lists all of the devices currently associated with the selected user. The **Principal device** column indicates each device's current status as a principal device or not.

- To set devices as a principal device, select the box next to the required devices and click **Set as principal device**.
- To set devices so they are no longer principal devices, select the required devices and click **Unset as principal device**.

Note that only an administrator (and not users themselves) can configure which of a user's devices are their principal devices.

Active FindMe sessions

The **Active FindMe sessions** page (**Users > Active FindMe sessions**) lists all FindMe accounts that are currently logged in to this VCS.

It displays details of their session including their login time, IP address and port, and when they last accessed this VCS.

You can terminate active web sessions by selecting the required sessions and clicking **Terminate session**.

You may see many sessions listed on this page if a zero **Session time out** value is configured. This typically occurs if a user ends their session by closing down their browser without first logging out of the VCS.

Note that this page does not apply if the VCS is using TMS Provisioning Extension services to provide FindMe account data; in this case, FindMe accounts are maintained through Cisco TMS.

Resetting forgotten passwords

You can reset any account password by logging in to the VCS as the default **admin** account or as any other administrator account that has read-write access. If this is not possible you can reset the **admin** or **root** password via a serial connection.

Resetting your root or admin password via a serial connection

If you have forgotten the password for either the **admin** account or the **root** account, you can reset it using the following procedure:

1. Connect a PC to the VCS using the serial cable as per the instructions in *VCS Getting Started Guide*. Serial port / console access is always enabled for one minute following a restart, even if it is normally disabled.
2. Restart the VCS.
3. Log in from the PC with the username **pwrec**. No password is required.
4. If the administrator account authentication source is set to *Remote*, you are given the option to change the setting to *Both*; this will allow local administrator accounts to access the system.
5. Select the account (**root** or **admin**) whose password you want to change.
6. You will be prompted for a new password.

The **pwrec** account is only active for one minute following a restart. After that time you will have to restart the system again to change the password.

Resetting FindMe account passwords

To change a password on behalf of a FindMe user without knowing their existing password (for example, when a user forgets their password):

1. Go to the **Edit FindMe account** page (**Users > FindMe accounts**, then click **View/Edit** or the username) for the account whose password you want to reset.
2. Enter the new password to be used when logging into this account into the **New password** and **Confirm password** fields and click **Save**.

This procedure only applies if local FindMe account authentication is enabled. If remote authentication is enabled, passwords are managed through your remote directory server instead.

Using the root account

The VCS provides a root account which can be used to log in to the VCS operating system. This account has a username of **root** (all lower case) and a default password of **TANDBERG** (all upper case). For security reasons you must change the password as soon as possible. An alarm is displayed on the web interface and the CLI if the **root** account has the default password set.

Note: the **root** account may allow access to sensitive information and it should not be used in normal operation, and in particular system configuration should not be conducted using this account. Use the **admin** account instead.

Changing the root account password

To change the password for the **root** account:

1. Log in to the VCS as **root** using the existing password. By default you can only do this using a serial connection or SSH.
2. Type the command **`passwd`**.
   You will be asked for the new password.
3. Enter the new password and when prompted, retype the password.
4. Type **`exit`** to log out of the root account.

Accessing the root account over SSH

The root account can be accessed over a serial connection or SSH only.

To enable and disable access to the root account using SSH:

1. Log in to the VCS as **root**.
2. Type one of the following commands:
   - **`rootaccess --ssh on`** to enable access using SSH
   - **`rootaccess --ssh off`** to disable access using SSH
3. Type **`exit`** to log out of the root account.

If you have disabled SSH access while logged in using SSH, your current session will remain active until you log out, but all future SSH access will be denied.

Maintenance

This section describes the pages that appear under the **Configuration > Maintenance** menu of the VCS web interface.

Enabling maintenance mode 301
About upgrading software components 302
Configuring logging 305
Managing option keys 307
About security certificates 309
Advanced security 320
Configuring language settings 324
Backing up and restoring VCS data 326
Diagnostics tools 328
Incident reporting 331
Checking the effect of a pattern 334
Locating an alias 335
Port usage 336
Network utilities 338
Restarting, rebooting and shutting down 342
Developer resources 344

Enabling maintenance mode

Maintenance mode is typically used when you need to upgrade or take out of service a VCS peer that is part of a cluster. It allows the other cluster peers to continue to operate normally while the peer that is in maintenance mode is upgraded or serviced.

Putting a peer into maintenance mode provides a controlled method of stopping any further registrations or calls from being managed by that peer:

- Standard VCS sessions:
  - New calls and registrations will be handled by another peer in the cluster.
  - Existing registrations are allowed to expire and they then should re-register to another peer (see *VCS Cluster Creation and Maintenance Deployment Guide* for more information about endpoint configuration and setting up DNS SRV records).
  - Existing calls will continue until the call is terminated. If necessary, you can manually remove any calls on this peer that do not clear automatically by going to **Status > Calls**, selecting the check box next to the calls you want to terminate and clicking **Disconnect** (note that SIP calls may not disconnect immediately).
- Unified CM mobile and remote access sessions:
  - Any existing calls passing through that VCS will be dropped.
  - Jabber clients will failover automatically and re-register through another peer in the cluster.
  - Clients running TC software will not failover automatically will have to be restarted.

To maintain capacity, we recommend that you only enable maintenance mode on one peer at a time.

To enable maintenance mode:

1. Log in the relevant peer.
2. Go to the **Maintenance mode** page (**Maintenance > Maintenance mode**).
3. Set **Maintenance mode** to *On*.
4. Click **Save** and click **OK** on the confirmation dialog.

Note that:

- An alarm is raised while the peer is in maintenance mode.
- You can monitor the **Resource usage** page (**Status > System > Resource usage**) to check how many registrations and calls are currently being handled by that peer.
- Maintenance mode is automatically disabled if the peer is restarted.

About upgrading software components

You can install new releases of the VCS software components on your existing hardware. Component upgrades can be performed in one of two ways:

- Using the web interface - this is the recommended process.
- Using secure copy (SCP/PSCP).

This guide describes how both of these methods are used to perform upgrades. You can also upgrade the **System platform** component using Cisco TMS (see the Cisco TMS documentation for more information).

- We recommended that you upgrade VCS components while the system is inactive.
- If you are upgrading a cluster, you must follow the directions in *VCS Cluster Creation and Maintenance Deployment Guide*
- If you are currently running non-clustered VCS X5.1, X5.1.1 or X5.2, you must first upgrade to X6.1, then upgrade from X6.1 to X8.n.
- If you are currently running non-clustered VCS X5.0 or earlier, you must first upgrade to X5.2, then upgrade from X5.2 to X6.1, and then upgrade from X6.1 to X8.n.

VCS software components

All existing installed components are listed on the **Upgrade** page (**Maintenance > Upgrade**), showing their current version and associated release key where appropriate.

The main component is the **System platform**, and when upgraded this will typically include automatic upgrades of some or all of the other components. However, you can independently upgrade the other components if required to do so. The upgrade process ensures that compatibility is maintained across all components.

Upgrade prerequisites

The upgrade requires you to have:

- a valid **Release key**, if you are upgrading to the next major release of the **System platform**, for example from X7.2 to X8.1; it is not required for dot releases, for example X8.1 to X8.2
- a software image file for the component you want to upgrade, and it is stored in a network location that is locally accessible from your client computer; use the standard .tar.gz software image file when upgrading a virtual machine (the .ova file is only required for the initial install of the VCS software on VMware)
- release notes for the software version you are upgrading to — additional manual steps may be required

Contact your Cisco representative for more information on how to obtain these.

Backing up before upgrading

You should backup your system configuration before upgrading. Click **System backup** to go to the Backup and restore page.

Upgrading and option keys

All existing option keys are retained through the upgrade from one version of the **System platform** to the next, including upgrades to the next major release. However, you are recommended to take note of your existing option keys before performing the upgrade.

New features may also become available with each major release of the **System platform** component, and you may need to install new option keys to take advantage of these new features. Contact your Cisco representative for more information on all the options available for the latest release of VCS software.

Installing and rebooting

Upgrading the **System platform** component is a two-stage process. First, the new software image is uploaded onto the VCS. At the same time, the current configuration of the system is recorded, so that this can be restored after the upgrade. During this initial stage the system will continue running on its existing software version, and all normal system processes will continue.

The second part of the upgrade involves rebooting the system. It is only during the reboot that the VCS installs the new software version and restores the previous configuration. Rebooting causes all current calls to terminate, and all current registrations to be ended.

This means that you can upload the new software at any time, and then wait until a convenient moment (for example, when no calls are taking place) to switch to the new version by rebooting the system.

Note: any configuration changes made between the software upload and the reboot will be lost when the system restarts using the new software version.

The upgrade of components other than the **System platform** does not involve a system reboot, however the services provided by that component will be temporarily stopped while the upgrade process completes.

Upgrading VCS software

The **Upgrade** page (**Maintenance > Upgrade**) is used to install new (or to downgrade) versions of VCS software components.

To upgrade a component using the web interface:

1. Review the relevant release notes to see if any special steps are required either before or after installing the software image file.
2. Go to the **Upgrade** page (**Maintenance > Upgrade**).
3. Click **Browse** and select the software image file for the component you want to upgrade.
   The VCS automatically detects which component you are upgrading based upon the selected software image file.
4. Enter the **Release key** if required.
5. Click **Upgrade**.
   The VCS will start loading the file. This may take a few minutes.
6. For upgrades to the **System platform** component, the **Upgrade confirmation** page is displayed:
   a. Check that:
      - the expected **New software version** number is displayed
      - the **MD5 hash** and **SHA1 hash** values match the values displayed on the cisco.com page, where you have downloaded the software image file

   b. Click **Continue with upgrade**.
      The **System upgrade** page opens and displays a progress bar while the software installs.
      When the software has installed, a summary of active calls and registrations is displayed. These will be lost when you reboot the system.
   c. Click **Reboot system**.
      Note that if you make any configuration changes between uploading the software and rebooting, those changes will be lost when the system restarts.
      After the reboot is complete you are taken to the **Login** page.

7. For upgrades to other components, the software is automatically installed. No reboot is required.

The upgrade is now complete. The **Overview** and **Upgrade** pages now show the upgraded software component version numbers.

Note that some components may require option keys to enable them; this is done through the Option keys page (**Maintenance > Option keys**).

Downgrading

If you need to downgrade to an earlier release of the **System platform**, configuration changes, including changes made to FindMe or Provisioning, will be lost. When the downgrade has completed you will have to restore a backup of the system configuration that was made against the release you have just reinstalled. Other manual steps may be required — you must review the release notes for the version you are downgrading from.

- To downgrade a component to an older release you should follow the same instructions as above for upgrading, but select the appropriate software image file for the software version you want to downgrade to.
- As with upgrading, you are recommended to backup your system configuration before downgrading.

Upgrading using secure copy (SCP/PSCP)

To upgrade using a secure copy program such as SCP or PSCP (part of the PuTTY free package) you need to transfer two files to the VCS:

- A text file containing just the 16-character Release Key (required for the **System platform** component only). Ensure there is no extraneous white space in this file.
- The file containing the software image.

To transfer these files:

1. If you are upgrading the **System platform** component, upload the Release Key file using SCP/PSCP to the **/tmp/** folder on the system. The target name must be **release-key**, for example:
   `scp release-key root@10.0.0.1:/tmp/release-key`
   - Enter the root password when prompted.
   - The Release Key file must be uploaded before the image file.
2. Upload the software image using SCP/PSCP.
   - For the **System platform** component:
     Upload to the **/tmp** folder on the system. The target name must be **/tmp/tandberg-image.tar.gz**, for example: `scp s42700x8_1_0.tar.gz root@10.0.0.1:/tmp/tandberg-image.tar.gz`
   - For other components:
     Upload to the **/tmp/pkgs/new/** folder on the system, preserving the file name and extension, for example: `scp root@10.0.0.1:/tmp/pkgs/new/vcs-lang-es-es_8.1_amd64.tlp`
3. Enter the root password when prompted.
   The software installation begins automatically. Wait until the software has installed completely. This should not take more than five minutes.
4. If you have upgraded the **System platform** component, log in to the VCS, either using the web interface or CLI, and reboot the VCS. After about five minutes the system will be ready to use.

Note: if you make any further configuration changes before rebooting, those changes will be lost when the system restarts, so you are recommended to reboot your system immediately.

Configuring logging

The VCS provides an event logging facility for troubleshooting and auditing purposes. The Event Log records information about such things as calls, registrations, and messages sent and received.

The VCS's logging options are configured on the **Logging** page (**Maintenance > Logging**) from where you can:

- specify the **Log level** to set the amount of information to record
- copy the Event Log to a **remote syslog server**

Event Log levels

You can control which events are logged by the VCS by setting the **Log level**.

All events have an associated level in the range 1-4, with Level 1 Events considered the most important. The table below gives an overview of the levels assigned to different events.

Level	Assigned events
1	High-level events such as registration requests and call attempts. Easily human readable. For example: ■ call attempt/connected/disconnected ■ registration attempt/accepted/rejected
2	All Level 1 events, plus: ■ logs of protocol messages sent and received (SIP, H.323, LDAP and so on) excluding noisy messages such as H.460.18 keepalives and H.245 video fast-updates
3	All Level 1 and Level 2 events, plus: ■ protocol keepalives ■ call-related SIP signaling messages
4	The most verbose level: all Level 1, Level 2 and Level 3 events, plus: ■ network level SIP messages

See the Events and levels section for a complete list of all events that are logged by the VCS, and the level at which they are logged.

Note that:

- Logging at level 3 or level 4 is not usually recommended as the Event Log holds a maximum of 2GB of data and logging at these levels on a busy system may cause the Event Log to be recycled too quickly.
- Changes to the log level affect both the Event Log that you can view via the web interface, and the information that is copied to any remote log server.
- Changes to the log level are not retrospective — they only affect what is logged from that point onwards.

Remote logging of events

The Event Log is always stored locally on the VCS. However, it is often convenient to collect copies of all event logs from various systems in a single location. This is referred to as remote logging. This is particularly recommended for peers in a cluster.

- You can configure the VCS to copy event log messages to up to 4 remote syslog servers.
- The syslog server must support the BSD (as defined in *RFC 3164*) or IETF (as defined in *RFC 5424*) syslog protocols.

Configuring a remote syslog server

To enable remote logging, configure the VCS with the IP addresses or Fully Qualified Domain Names (FQDNs) of the **Remote syslog servers** to which the Event Log will be written.

For each server you must also specify the syslog protocol **Mode** to use when sending messages to that server, either *Legacy BSD format*, *IETF syslog format* or *IETF using TLS connection*. Alternatively, choose *Custom* to configure individually the **Transport**, **Port** and **Format** to use.

If a TLS connection is used you must ensure that a suitable CA certificate file has been configured on the VCS. Note that CRL checking is disabled by default; to enable CRL checking you must select the *Custom* mode, set **CRL check** to *On* and ensure that relevant certificate revocation lists (CRLs) are loaded. See About security certificates [p.309] for more information.

Note that:

- The remote server cannot be another VCS.
- A VCS cannot act as a remote log server for other systems.
- Events are always logged locally (to the Event Log) regardless of whether or not remote logging is enabled.
- If more than one remote syslog server is configured, the same information is sent to each server.
- The VCS may use any of the 23 available syslog facilities for different messages. Specifically, LOCAL0..LOCAL7 (facilities 16..23) are used by different software components of the VCS.

Managing option keys

Options are used to add additional features to the VCS. Option keys can either be valid for a fixed time period or have an unlimited duration. Your VCS may have been shipped with one or more optional features pre-installed. To purchase further options, contact your Cisco representative.

The **Option keys** page (**Maintenance > Option keys**) lists all the existing options currently installed on the VCS, and allows you to add new options.

The **System information** section summarizes the existing features installed on the VCS and displays the **Validity period** of each installed key. The options that you may see here include:

- **Traversal Server**: enables the VCS to work as a firewall traversal server.
- **H.323 to SIP Interworking gateway**: enables H.323 calls to be translated to SIP and vice versa.
- **FindMe™**: enables FindMe functionality.
- **Advanced Networking**: enables the LAN 2 port on a VCS, and enables static NAT functionality on a VCS Expressway.
- **Device Provisioning**: enables the VCS's Provisioning Server. This allows VCS to provision endpoints with configuration information on request and to supply endpoints with phone book information. (Endpoints including Jabber Video, E20, and the EX and MX Series can request to be provisioned.) Note that the VCS must use Cisco TMS to obtain configuration and phone book information for distribution.
- **Starter Pack**: allows the VCS to offer basic device provisioning without the need for Cisco TMS (see Provisioning (Starter Pack)).
- **Traversal calls**: determines the number of traversal calls allowed on the VCS (or VCS cluster) at any one time. Note that traversal calls that are passing through the VCS from one neighbor to another but where neither endpoint in the call is locally registered will still be counted as one traversal call. See the Call types and licensing [p.430] section for more information.
- **Non-traversal calls**: determines the number of non-traversal calls allowed on the VCS (or VCS cluster) at any one time. Note that non-traversal calls that are passing through the VCS from one neighbor to another but where neither endpoint in the call is locally registered may or may not require a non-traversal call license, depending on the Call signaling optimization setting. Note that a non-traversal call on a VCS Expressway will consume a traversal license if there are no non-traversal call licenses available.
- **Registrations**: the number of concurrent registrations allowed on the VCS. An endpoint can register with more than one alias and this will be considered to be a single registration. However, an endpoint that supports both SIP and H.323 and registers using both protocols will count as two registrations. H.323 systems such as gateways, MCUs and Content Servers can also register with the VCS, and these will each count as one registration.
- **TURN Relays**: the number of concurrent TURN relays that can be allocated by this VCS (or VCS cluster). See About ICE and TURN services [p.61] for more information.
- **Encryption**: indicates that AES (and DES) encryption is supported by this software build.
- **Advanced account security**: enables advanced security features and restrictions for high-security installations.
- **Microsoft Interoperability**: enables encrypted calls to and from Microsoft Lync 2010 Server (for both native SIP calls and calls interworked from H.323). It is also required by the Lync B2BUA when establishing ICE calls to Lync 2010 clients. It is required for all types of communication with Lync 2013.

See License usage within a cluster [p.184] for more information about how traversal call, non-traversal call and TURN relay option key licenses are shared across all peers in the cluster.

Adding option keys using the web interface

To add an option key:

1. In the **Add option key** field, enter the key that has been provided to you for the option you want to add.
2. Click **Add option**.

Some option keys require that the VCS is restarted before the option key will take effect. In such cases you will receive an alarm on the web interface, which will remain in place as a reminder until the system has been restarted. However, you can continue to use and configure the VCS in the meantime.

Adding option keys using the CLI

To return the indexes of all the option keys that are already installed on your system:

```
xStatus Options
```

To add a new option key to your system:

```
xConfiguration Option [1..64] Key
```

Note: when using the CLI to add an extra option key, you can use any unused option index. If you chose an existing option index, that option will be overwritten and the extra functionality provided by that option key will no longer exist. To see which indexes are currently in use, type **`xConfiguration option`**.

About security certificates

For extra security, you may want to have the VCS communicate with other systems (such as LDAP servers, neighbor VCSs, or clients such as SIP endpoints and web browsers) using TLS encryption.

For this to work successfully in a connection between a client and server:

- The server must have a certificate installed that verifies its identity. This certificate must be signed by a Certificate Authority (CA).
- The client must trust the CA that signed the certificate used by the server.

The VCS allows you to install appropriate files so that it can act as either a client or a server in connections using TLS. The VCS can also authenticate client connections (typically from a web browser) over HTTPS. You can also upload certificate revocation lists (CRLs) for the CAs used to verify LDAP server and HTTPS client certificates.

The VCS can generate server certificate signing requests (CSRs). This removes the need to use an external mechanism to generate and obtain certificate requests.

For secure communications (HTTPS and SIP/TLS) we recommend that you replace the VCS default certificate with a certificate generated by a trusted certificate authority.

Note that in connections:

- to an endpoint, the VCS acts as the TLS server
- to an LDAP server , the VCS is a client
- between two VCS systems, either VCS may be the client with the other VCS being the TLS server
- via HTTPS, the web browser is the client and the VCS is the server

TLS can be difficult to configure. For example, when using it with an LDAP server we recommend that you confirm that your system is working correctly before you attempt to secure the connection with TLS. You are also recommended to use a third party LDAP browser to verify that your LDAP server is correctly configured to use TLS.

Note: be careful not to allow your CA certificates or CRLs to expire as this may cause certificates signed by those CAs to be rejected.

Certificate and CRL files can only be managed via the web interface. They cannot be installed using the CLI.

See Managing the trusted CA certificate list [p.309] and Managing the VCS's server certificate [p.310] for instructions about how to install certificates. For further information, see *Certificate Creation and Use with VCS Deployment Guide*.

Managing the trusted CA certificate list

The **Trusted CA certificate** page (**Maintenance > Security certificates > Trusted CA certificate**) allows you to manage the list of certificates for the Certificate Authorities (CAs) trusted by this VCS. When a TLS connection to VCS mandates certificate verification, the certificate presented to the VCS must be signed by a trusted CA in this list and there must be a full chain of trust (intermediate CAs) to the root CA.

- To upload a new file containing one or more CA certificates, **Browse** to the required PEM file and click **Append CA certificate**. This will append any new certificates to the existing list of CA certificates. Note that if you are replacing existing certificates for a particular issuer and subject, you have to manually

delete the previous certificates.

- To replace all of the currently uploaded CA certificates with the system's original list of trusted CA certificates, click **Reset to default CA certificate**.
- To view the entire list of currently uploaded trusted CA certificates, click **Show all (decoded)** to view it in a human-readable form, or click **Show all (PEM file)** to view the file in its raw format.
- To view an individual trusted CA certificate, click on **View (decoded)** in the row for the specific CA certificate.
- To delete one or more CA certificates, tick the box(es) next to the relevant CA certificate(s) and click **Delete**.

Note: if you have enabled certificate revocation list (CRL) checking for TLS encrypted connections to an LDAP server (for account authentication), you must add the PEM encoded CRL data to your trusted CA certificate file.

Managing the VCS's server certificate

The **Server certificate** page (**Maintenance > Security certificates > Server certificate**) is used to manage the VCS's server certificate. This certificate is used to identify the VCS when it communicates with client systems using TLS encryption, and with web browsers over HTTPS. You can:

- view details about the currently loaded certificate
- generate a certificate signing request
- upload a new server certificate

Viewing the currently uploaded certificate

The **Server certificate data** section shows information about the server certificate currently loaded on the VCS.

- To view the currently uploaded server certificate file, click **Show (decoded)** to view it in a human-readable form, or click **Show (PEM file)** to view the file in its raw format.
  Note that if a certificate contains SRV-ID or XMPP-ID formatted entries, when that certificate is viewed those entries will show as '<unsupported>'. That does not mean the certificate is invalid, but that the openssl code does not know how to display those identifiers.
- To replace the currently uploaded server certificate with the VCS's original certificate, click **Reset to default server certificate**.

Note: do not allow your server certificate to expire as this may cause other external systems to reject your certificate and prevent the VCS from being able to connect to those systems.

Generating a certificate signing request (CSR)

The VCS can generate server certificate signing requests. This removes the need to use an external mechanism to generate and obtain certificate requests.

To generate a CSR:

1. Go to **Maintenance > Security certificates > Server certificate**.
2. Click **Generate CSR** to go to the **Generate CSR** page.

3. Enter the required properties for the certificate.
   - See Server certificates and clustered systems [p.311] if your VCS is part of a cluster.
   - See Server certificate requirements for Unified Communications [p.99] if this VCS is part of a Unified Communications solution.
   - The certificate request includes automatically the public key that will be used in the certificate, and the client and server authentication Enhanced Key Usage (EKU) extension.
4. Click **Generate CSR**. The system will produce a signing request and an associated private key.
   Note that the private key is stored securely on the VCS and cannot be viewed or downloaded. You must never disclose your private key, not even to the certificate authority.
5. You are returned to the **Server certificate** page. From here you can:
   - **Download** the request to your local file system so that it can be sent to a certificate authority. You are prompted to save the file (the exact wording depends on your browser).
   - View the current request (click **Show (decoded)** to view it in a human-readable form, or click **Show (PEM file)** to view the file in its raw format).

Note that only one signing request can be in progress at any one time. This is because the VCS has to keep track of the private key file associated with the current request. To discard the current request and start a new request, click **Discard CSR**.

When the signed server certificate is received back from the certificate authority it must be uploaded to the VCS as described below.

Uploading a new server certificate

The **Upload new certificate** section is used to replace the VCS's current server certificate with a new certificate.

To upload a server certificate:

1. Go to **Maintenance > Security certificates > Server certificate**.
2. Use the **Browse** button in the **Upload new certificate** section to select and upload the **server certificate** PEM file.
3. If you used an external system to generate the Certificate Signing Request (CSR) you must also upload the **server private key** PEM file that was used to encrypt the server certificate. (The private key file will have been automatically generated and stored earlier if the VCS was used to produce the CSR for this server certificate.)
   - The **server private key** PEM file must not be password protected.
   - You cannot upload a server private key if a certificate signing request is in progress.
4. Click **Upload server certificate data**.

Server certificates and clustered systems

When a CSR is generated, a single request and private key combination is generated for that peer only.

If you have a cluster of VCSs, you must generate a separate signing request on each peer. Those requests must then be sent to the certificate authority and the returned server certificates uploaded to each relevant peer.

You must ensure that the correct server certificate is uploaded to the appropriate peer, otherwise the stored private key on each peer will not correspond to the uploaded certificate.

Server certificates and Unified Communications

VCS Control server certificate requirements

The VCS Control server certificate needs to include the following elements in its list of subject alternate names:

- **Unified CM phone security profile names**: the names, in FQDN format, of all of the **Phone Security Profiles** in Unified CM that are configured for encrypted TLS and are used for devices requiring remote access. This ensures that Unified CM can communicate with VCS Control via a TLS connection when it is forwarding messages from devices that are configured with those security profiles.
- **IM and Presence chat node aliases (federated group chat)**: the **Chat Node Aliases** (e.g. chatroom1.example.com) that are configured on the IM and Presence servers. These are required only for Unified Communications XMPP federation deployments that intend to support group chat over TLS with federated contacts.
  The VCS Control automatically includes the chat node aliases in the CSR, providing it has discovered a set of IM&P servers.
  We recommend that you use DNS format for the chat node aliases when generating the CSR. You must include the same chat node aliases in the VCS Expressway server certificate's alternative names.

Figure 7: Entering subject alternative names for security profiles and chat node aliases on the VCS Control's CSR generator

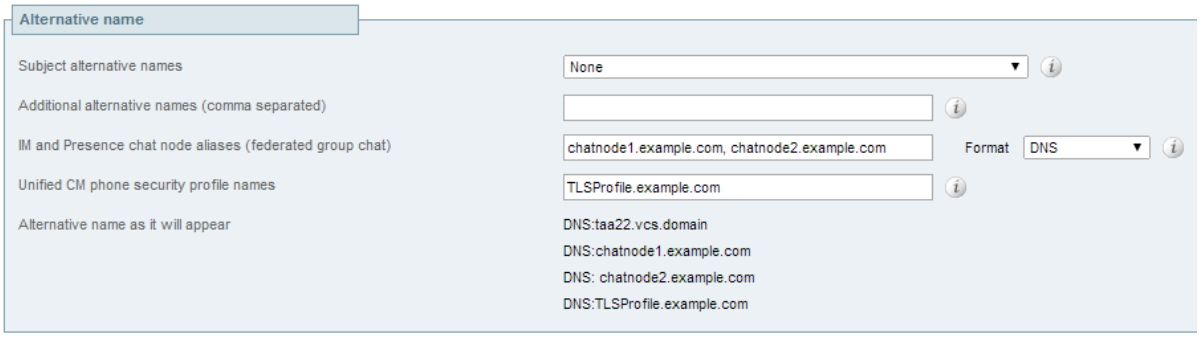

VCS Expressway server certificate requirements

The VCS Expressway server certificate needs to include the following elements in its list of subject alternate names:

- **Unified CM registrations domains**: all of the domains which are configured on the VCS Control for Unified CM registrations. They are required for secure communications between endpoint devices and VCS Expressway.
  You must select the *DNS* format and manually specify the required FQDNs, separated by commas if you need multiple domains. The *SRVName* format may not be supported by your chosen CA.
  You must also prefix each with `collab-edge.` (see example in following screenshot).
- **XMPP federation domains**: the domains used for point-to-point XMPP federation. These are configured on the IM&P servers and should also be configured on the VCS Control as domains for XMPP federation. We recommend that you select the *DNS* format and manually specify the required FQDNs, separated by commas if you need multiple domains. The *XMPPAddress* format may not be supported by your chosen CA.
- **IM and Presence chat node aliases (federated group chat)**: the same set of **Chat Node Aliases** as

entered on the VCS Control's certificate. They are only required for voice and presence deployments which will support group chat over TLS with federated contacts.
We recommend that you select the *DNS* format and manually specify the required FQDNs, separated by commas if you need multiple domains. The *XMPPAddress* format may not be supported by your chosen CA.
Note that the list of required aliases can be viewed (and copy-pasted) from the equivalent **Generate CSR** page on the VCS Control.

Figure 8: Entering subject alternative names for Unified CM registration domains, XMPP federation domains, and chat node aliases, on the VCS Expressway's CSR generator

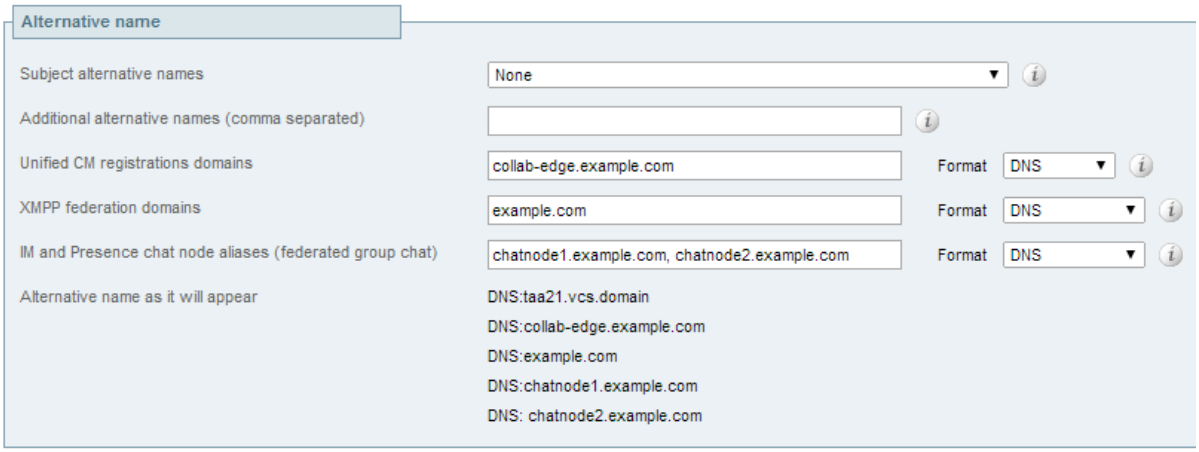

Managing certificate revocation lists (CRLs)

Certificate revocation list (CRL) files are used by the VCS to validate certificates presented by client browsers and external systems that communicate with the VCS over TLS/HTTPS. A CRL identifies those certificates that have been revoked and can no longer be used to communicate with the VCS.

We recommend that you upload CRL data for the CAs that sign TLS/HTTPS client and server certificates. When enabled, CRL checking is applied for every CA in the chain of trust.

CRL sources

The VCS can obtain CRL information from multiple sources:

- automatic downloads of CRL data from CRL distribution points
- through OCSP (Online Certificate Status Protocol) responder URIs in the certificate to be checked (SIP TLS only)
- manual upload of CRL data
- CRL data embedded within the VCS's **Trusted CA certificate** file

The following limitations and usage guidelines apply:

- when establishing SIP TLS connections, the CRL data sources are subject to the **Certificate revocation checking** settings on the **SIP** configuration page
- automatically uploaded CRL files override any manually loaded CRL files (except for when verifying SIP TLS connections, when both manually uploaded or automatically downloaded CRL data may be used)

- when validating certificates presented by external policy servers, the VCS uses manually loaded CRLs only
- when validating TLS connections with an LDAP server for remote login account authentication, the VCS uses CRL data within the **Trusted CA certificate** only

Automatic CRL updates

We recommend that the VCS is configured to perform automatic CRL updates. This ensures that the latest CRLs are available for certificate validation.

To configure the VCS to use automatic CRL updates:

1. Go to **Maintenance > Security certificates > CRL management**.
2. Set **Automatic CRL updates** to *Enabled*.
3. Enter the set of **HTTP(S) distribution points** from where the VCS can obtain CRL files. Note that:
   - you must specify each distribution point on a new line
   - only HTTP(S) distribution points are supported; if HTTPS is used, the distribution point server itself must have a valid certificate
   - PEM and DER encoded CRL files are supported
   - the distribution point may point directly to a CRL file or to ZIP and GZIP archives containing multiple CRL files
   - the file extensions in the URL or on any files unpacked from a downloaded archive do not matter as the VCS will determine the underlying file type for itself; however, typical URLs could be in the format:
     - http://example.com/crl.pem
     - http://example.com/crl.der
     - http://example.com/ca.crl
     - https://example.com/allcrls.zip
     - https://example.com/allcrls.gz
4. Enter the **Daily update time** (in UTC). This is the approximate time of day when the VCS will attempt to update its CRLs from the distribution points.
5. Click **Save**.

Manual CRL updates

CRL files can also be uploaded manually to the VCS. Certificates presented by external policy servers can only be validated against manually loaded CRLs.

To upload a CRL file:

1. Go to **Maintenance > Security certificates > CRL management**.
2. Click **Browse** and select the required file from your file system. It must be in PEM encoded format.
3. Click **Upload CRL file**.
   This uploads the selected file and replaces any previously uploaded CRL file.

Click **Remove revocation list** if you want to remove the manually uploaded file from the VCS.

Note that if a certificate authority's CRL expires, all certificates issued by that CA will be treated as revoked.

Configuring revocation checking for SIP TLS connections

You must also configure how certificate revocation checking is managed for SIP TLS connections.

1. Go to **Configuration > SIP**.
2. Scroll down to the **Certificate revocation checking** section and configure the settings accordingly:

Field	Description	Usage tips
Certificate revocation checking mode	Controls whether revocation checking is performed for certificates exchanged during SIP TLS connection establishment.	We recommend that revocation checking is enabled.
Use OCSP	Controls whether the Online Certificate Status Protocol (OCSP) may be used to perform certificate revocation checking.	To use OCSP, the X.509 certificate to be checked must contain an OCSP responder URI.
Use CRLs	Controls whether Certificate Revocation Lists (CRLs) are used to perform certificate revocation checking.	CRLs can be used if the certificate does not support OCSP. CRLs can be loaded manually onto the VCS, downloaded automatically from preconfigured URIs (see Managing certificate revocation lists (CRLs) [p.313]), or downloaded automatically from a CRL distribution point (CDP) URI contained in the X.509 certificate.
Allow CRL downloads from CDPs	Controls whether the download of CRLs from the CDP URIs contained in X.509 certificates is allowed.	
Fallback behavior	Controls the revocation checking behavior if the revocation status cannot be established, for example if the revocation source cannot be contacted. *Treat as revoked*: treat the certificate as revoked (and thus do not allow the TLS connection). *Treat as not revoked*: treat the certificate as not revoked. Default: *Treat as not revoked*	*Treat as not revoked* ensures that your system continues to operate in a normal manner if the revocation source cannot be contacted, however it does potentially mean that revoked certificates will be accepted.

Configuring certificate-based authentication

The **Certificate-based authentication configuration** page (**Maintenance > Security certificates > Certificate-based authentication configuration**) is used to configure how the VCS retrieves authorization credentials (the username) from a client browser's certificate.

This configuration is required if **Client certificate-based security** (as defined on the System page) has been set to *Certificate-based authentication.* This setting means that the standard login mechanism is no longer available and that administrators (and FindMe accounts, if accessed via the VCS) can log in only if they present a valid browser certificate — typically provided via a smart card (also referred to as a Common Access Card or CAC) — and the certificate contains appropriate credentials that have a suitable authorization level.

Enabling certificate-based authentication

The recommended procedure for enabling certificate-based authentication is described below:

1. Add the VCS's trusted CA and server certificate files (on the **Trusted CA certificate** and **Server certificate** pages, respectively).
2. Configure certificate revocation lists (on the **CRL management** page).
3. Use the **Client certificate testing** page to verify that the client certificate you intend to use is valid.
4. Set **Client certificate-based security** to *Certificate validation* (on the **System administration** page).
5. Restart the VCS.
6. Use the **Client certificate testing** page again to set up the required regex and format patterns to extract the username credentials from the certificate.
7. Only when you are sure that the correct username is being extracted from the certificate, set **Client certificate-based security** to *Certificate-based authentication*.

Authentication versus authorization

When the VCS is operating in certificate-based authentication mode, user authentication is managed by a process external to the VCS.

When a user attempts to log in to the VCS, the VCS will request a certificate from the client browser. The browser may then interact with a card reader to obtain the certificate from the smart card (or alternatively the certificate may already be loaded into the browser). To release the certificate from the card/browser, the user will typically be requested to authenticate themselves by entering a PIN. If the client certificate received by the VCS is valid (signed by a trusted certificate authority, in date and not revoked by a CRL) then the user is deemed to be authenticated.

To determine the user's authorization level (read-write, read-only and so on) the VCS must extract the user's authorization username from the certificate and present it to the relevant local or remote authorization mechanism.

The following diagram shows an example authorization and authentication process. It shows how a certificate is obtained from a card reader and then validated by the VCS. It then shows how the VCS obtains the user's authorization level from an Active Directory service.

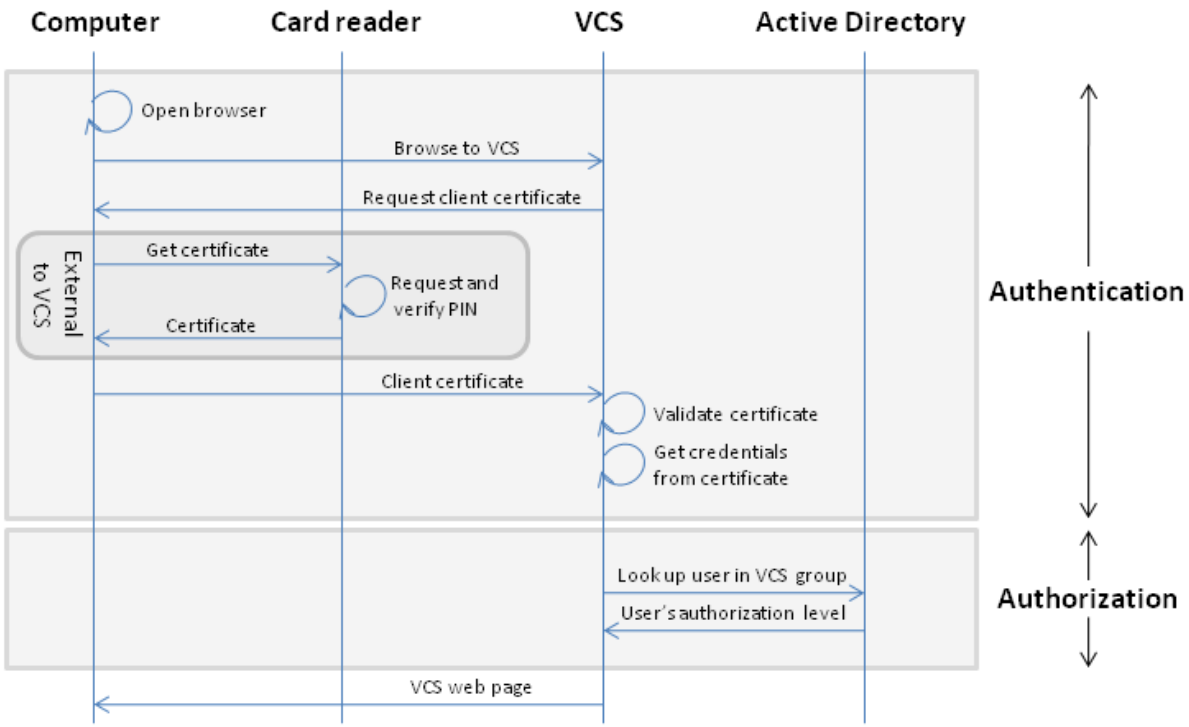

Note that if the client certificate is not protected (by a PIN or some other mechanism) then unauthenticated access to the VCS may be possible. This lack of protection may also apply if the certificates are stored in the browser, although some browsers do allow you to password protect their certificate store.

Obtaining the username from the certificate

The username is extracted from the client browser's certificate according to the patterns defined in the **Regex** and **Username format** fields on the **Certificate-based authentication configuration** page:

- In the **Regex** field, use the `(?<name>regex)` syntax to supply names for capture groups so that matching sub-patterns can be substituted in the associated **Username format** field, for example, `/(Subject:.*, CN=(?<Group1>.*))/m`.
  The regex defined here must conform to *PHP regex guidelines*.
- The **Username format** field can contain a mixture of fixed text and the capture group names used in the **Regex**. Delimit each capture group name with `#`, for example, `prefix#Group1#suffix`. Each capture group name will be replaced with the text obtained from the regular expression processing.

You can use the Client certificate testing page to test the outcome of applying different **Regex** and **Username format** combinations to a certificate.

Testing client certificates

The **Client certificate testing** page (**Maintenance > Security certificates > Client certificate testing**) is used to check client certificates before enabling client certificate validation. You can:

- Test whether a client certificate is valid when checked against the VCS's current trusted CA list and, if loaded, the revocation list (see Managing certificate revocation lists (CRLs) [p.313]).

- Test the outcome of applying the regex and template patterns that retrieve a certificate's authorization credentials (the username).

You can test against:

- a certificate on your local file system
- the browser's currently loaded certificate

To test if a certificate is valid:

1. Select the **Certificate source**. You can choose to:
   - upload a test file from your file system in either PEM or plain text format; if so click **Browse** to select the certificate file you want to test
   - test against the certificate currently loaded into your browser (only available if the system is already configured to use *Certificate validation* and a certificate is currently loaded)
2. Ignore the **Certificate-based authentication pattern** section - this is only relevant if you are extracting authorization credentials from the certificate.
3. Click **Check certificate**.
4. The results of the test are shown in the **Certificate test results** section.

To retrieve authorization credentials (username) from the certificate:

1. Select the **Certificate source** as described above.
2. Configure the **Regex** and **Username format** fields as required. Their purpose is to extract a username from the nominated certificate by supplying a regular expression that will look for an appropriate string pattern within the certificate. The fields default to the currently configured settings on the **Certificate-based authentication configuration** page but you can change them as required.
   - In the **Regex** field, use the `(?<name>regex)` syntax to supply names for capture groups so that matching sub-patterns can be substituted in the associated **Username format** field, for example, `/(Subject:.*, CN=(?<Group1>.*))/m`.
     The regex defined here must conform to *PHP regex guidelines*.
   - The **Username format** field can contain a mixture of fixed text and the capture group names used in the **Regex**. Delimit each capture group name with `#`, for example, `prefix#Group1#suffix`. Each capture group name will be replaced with the text obtained from the regular expression processing.
3. Click **Check certificate**.
   The results of the test are shown in the **Certificate test results** section. The **Resulting string** item is the username credential that would be checked against the relevant authorization mechanism to determine that user's authorization (account access) level.
4. If necessary, you can modify the **Regex** and **Username format** fields and repeat the test until the correct results are produced.
   Note that if the **Certificate source** is an uploaded PEM or plain text file, the selected file is temporarily uploaded to the VCS when the test is first performed:
   - if you want to keep testing different **Regex** and **Username format** combinations against the same file, you do not have to reselect the file for every test
   - if you change the contents of your test file on your file system, or you want to choose a different file, you must click **Browse** again and select the new or modified file to upload
5. If you have changed the **Regex** and **Username format** fields from their default values and want to use these values in the VCS's actual configuration (as specified on the **Certificate-based authentication configuration** page) then click **Make these settings permanent**.

Note:

- Any uploaded test file is automatically deleted from the VCS at the end of your login session.
- The regex is applied to a plain text version of an encoded certificate. The system uses the command **`openssl x509 -text -nameopt RFC2253 -noout`** to extract the plain text certificate from its encoded format.

Advanced security

The **Advanced security** page (**Maintenance > Advanced security**) is used to configure the VCS for use in highly secure environments. This page can only be accessed if the **Advanced Account Security** option key is installed.

You can configure the system for:

- Advanced account security mode
- FIPS140-2 cryptographic mode

Configuring advanced account security mode

Enabling advanced account security limits login access to remotely authenticated users using the web interface only, and also restricts access to some system features. To indicate that the VCS is in advanced account security mode, any text specified as the **Classification banner** message is displayed on every web page.

Note that a system reboot is required for changes to the advanced account security mode to take effect.

Prerequisites

Before advanced account security mode can be enabled:

- the system must be configured to use remote account authentication for administrator accounts
- the **Advanced Account Security** option key must be installed

CAUTION: ensure that the remote directory service is working properly, as after advanced account security is enabled you will not be able to log in to the VCS via the local **admin** account or as **root**.

You are also recommended to configure your system so that:

- SNMP is disabled
- the session time out period is set to a non-zero value
- HTTPS client certificate validation is enabled
- user account LDAP server configuration uses TLS encryption and has certificate revocation list (CRL) checking set to *All*
- remote logging is disabled
- incident reporting is disabled
- any connection to an external manager uses HTTPS and has certificate checking enabled

Alarms are raised for any non-recommended configuration settings.

Enabling advanced account security

To enable advanced account security:

1. Go to **Maintenance > Advanced security**.
2. Enter a **Classification banner**.
   The text entered here is displayed on every web page.

3. Set **Advanced account security mode** to *On*.
4. Click **Save**.
5. Reboot the VCS (**Maintenance > Reboot**).

VCS functionality: changes and limitations

When in secure mode, the following changes and limitations to standard VCS functionality apply:

- access over SSH and through the serial port is disabled and cannot be turned on (the pwrec password recovery function is also unavailable)
- access over HTTPS is enabled and cannot be turned off
- the command line interface (CLI) and API access are unavailable
- the root account, the admin account and any other local administrator accounts are disabled
- administrator account authentication source is set to *Remote only* and cannot be changed
- if there are three consecutive failed attempts to log in (by the same or different users), login access to the VCS is blocked for 60 seconds
- immediately after logging in, the current user is shown statistics of when they previously logged in and details of any failed attempts to log in using that account
- administrator accounts with read-only or read-write access levels cannot view the Event Log, Configuration Log and Network Log pages (these pages can be viewed only by accounts with *Auditor* access level)
- the **Upgrade** page only displays the **System platform** component
- downgrades to version X5.0 or below are not allowed

The Event Log, Configuration Log, Network Log, call history, search history and registration history are cleared whenever the VCS is taken out of advanced account security mode. Note that if intrusion protection is enabled, this will cause any existing blocked addresses to become unblocked.

Configuring FIPS140-2 cryptographic mode

FIPS140 is a U.S. and Canadian government standard that specifies security requirements for cryptographic modules. FIPS140-1 became a mandatory standard for the protection of sensitive data in 1994 and was superseded by FIPS140-2 in 2001.

VCS X8.1 or later implements FIPS140-2 compliant features. When in FIPS140-2 cryptographic mode, system performance may be affected due to the increased cryptographic workload.

Prerequisites

Before FIPS140-2 mode can be enabled:

- Ensure that the system is not using NTLM protocol challenges with a direct Active Directory Service connection for device authentication; NTLM cannot be used while in FIPS140-2 mode.
- If login authentication via a remote LDAP server is configured, ensure that it uses TLS encryption if it is using SASL binding.
- The **Advanced Account Security** option key must be installed.

FIPS140-2 compliance also requires the following configuration settings:

- System-wide SIP transport mode settings must be TLS: *On*, TCP: *Off* and UDP: *Off*.
- All SIP zones must use TLS.
- The VCS cannot be a part of a cluster.
- SNMP and NTP server configuration cannot use MD5 hashing or DES encryption.

If your system is running as a virtualized application and has never been through an upgrade process:

1. Ensure it has a valid release key (check this via **Maintenance > Option keys**).
2. Perform a system upgrade. You can upgrade the system to the same software release version that it is currently running.
   If you do not complete this step, the activation process described below will fail.

Enabling FIPS140-2 cryptographic mode

CAUTION: The transition to FIPS140-2 cryptographic mode requires a system reset to be performed. This will remove all existing configuration data except IP addresses and option keys. To preserve your data you should take a backup immediately prior to performing the reset, and then restore the backup file when the reset has completed.
The reset removes all administrator account information and reinstates the default security certificates. To log in after the reset has completed you will have to use the default admin/TANDBERG credentials. We recommend that you limit network access to the system during this process until you have secured your system by restoring previous data or by changing the admin account password from its default value. The **root** account password will also be reset to TANDBERG.

To turn your system into a compliant FIPS140-2 cryptographic system:

1. Enable FIPS140-2 cryptographic mode:
   a. Go to **Maintenance > Advanced security**.
   b. Set **FIPS140-2 cryptographic mode** to *On*.
   c. Click **Save**.
2. Fix any alarms that have been raised that report non-compliant configuration.
3. Take a system backup if you want to preserve your current configuration data.
   Note that backups taken while in FIPS140-2 mode require password protection.
4. Reset the system and complete the activation of FIPS140-2 mode:
   a. Log in to VCS as **root**.
   b. Type `fips-activate`
   The reset takes approximately 30 minutes to complete.
5. When the system has restarted, log in using the default admin/TANDBERG credentials.
   You will see several alarms related to non-FIPS140-2 compliance, insecure passwords and missing default links. You can ignore these alarms if you intend to restore the backup taken prior to the reset.
6. Restore your previous data, if required.
   Note that while in FIPS140-2 mode, you can only restore backup files that were taken when **FIPS140-2 cryptographic mode** was set *On*. Any previous administrator account information and passwords will be restored, however the previous **root** account password will not be restored. If the data you are restoring contains untrusted security certificates, the restart that occurs as part of the restore process may take up to 6 minutes to complete.

FIPS140-2 compliant features

The following VCS features are FIPS140-2 compliant / use FIPS140-2 compliant algorithms:

- Administration over the web interface
- XML and REST APIs
- SSH access (restricted to only use AES or 3DES ciphers)
- Login authentication via a remote LDAP server (must use TLS if using SASL binding)
- Client certificate verification
- SNMP (SNMPv3 authentication is restricted to SHA1, and SNMPv3 privacy is restricted to AES)
- NTP (NTP server authentication using symmetric key is restricted to SHA1)
- Device authentication against the local database
- SIP connections to/from the VCS providing they use TLS
- H.323 connections to/from the VCS
- Delegated credential checking
- SRTP media encryption
- SIP/H.323 interworking
- TURN server authentication
- Encrypted backup/restore operations
- Connections to an external manager
- Connections to external policy services
- Remote logging
- Incident reporting
- CSR generation

Other VCS features are not FIPS140-2 compliant, including:

- SIP certificate revocation features
- Any SIP media encryption policy other than *Auto*
- SIP authentication over NTLM / Active Directory
- SIP/H.323 device authentication against an H.350 directory service
- Microsoft Lync B2BUA
- Unified Communications mobile and remote access
- Clustering
- Use of Cisco TMSPE

Configuring language settings

The **Language** page (**Maintenance > Language**) controls which language is used for text displayed in the web user interface.

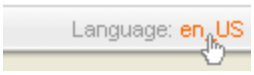

You can also get to the **Language** page by clicking on the **Language** link at the bottom of every page.

Changing the language

You can configure both the default language and the language to use on an individual browser:

Field	Description	Usage tips
System default language	The default language used on the web interface.	This applies to administrator and user (FindMe) sessions. You can select from the set of installed language packs.
This browser	The language used by the current browser on the current client computer. It can be set to use either the system default language or a specific alternative language.	This setting applies to the browser currently in use on the client computer. If you access the VCS user interface using a different browser or a different computer, a different language setting may be in place.

Installing language packs

You can install new language packs or install an updated version of an existing language pack.

Language packs are downloaded from the same area on cisco.com from where you obtain your VCS software files. All available languages are contained in one language pack zip file. Download the appropriate language pack version that matches your software release.

After downloading the language pack, unzip the file to extract a set of .tlp files, one per supported language.

To install a .tlp language pack file:

1. Go to **Maintenance > Language**.
2. Click **Browse** and select the **.tlp** language pack file you want to upload.
3. Click **Install**.
   The selected language pack is then verified and uploaded. This may take several seconds.
4. Repeat steps 2 and 3 for any other languages you want to install.

For the list of available languages, see the relevant release notes for your software version.

Note that:

- English (en_us) is installed by default and is always available.
- You cannot create your own language packs. Language packs can be obtained only from Cisco.
- If you upgrade to a later version of VCS software you will see a "Language pack mismatch" alarm. You may need to install a later version of the associated language pack to ensure that all text is available in the chosen language.

Removing language packs

To remove a language pack:

1. Go to the **Language** page (**Maintenance > Language**).
2. From the list of installed language packs, select the language packs you want to remove.
3. Click **Remove**.
4. Click **Yes** when asked to confirm their removal.
   The selected language packs are then removed. This may take several seconds.

Backing up and restoring VCS data

The **Backup and restore** page (**Maintenance > Backup and restore**) is used to create and restore backup files of your VCS data.

When to create a backup

You are recommended to create a backup in the following situations:

- before performing an upgrade
- before performing a system restore
- in demonstration and test environments if you want to be able to restore the VCS to a known configuration

Content of the backup file

The data in the backup includes:

- system configuration settings
- clustering configuration
- security certificates
- administrator account details
- call detail records (if the CDR service on VCS is enabled)

Note that log files are not included in the backup files.

Limitations

The following limitations apply:

- Backups can only be restored to a system running the same version of software from which the backup was made.
- You can create a backup on one VCS and restore it to a different VCS, for example if the original system has failed. However, before performing the restore you must install on the new system the same set of option keys that were installed on the old system. If you attempt to restore a backup made on a different VCS, you will receive a warning message, but you will be allowed to continue.
- Backups should not be used to copy data between VCSs, because system specific information, such as IP addresses, will be duplicated.

Note: we recommend that you take the VCS unit out of service before performing a restore.

For extra information about backing up and restoring peers in a cluster, see the Cluster upgrades, backup and restore [p.191] section.

Creating a system backup

To create a backup of VCS system data:

1. Go to **Maintenance > Backup and restore**.
2. Optionally, enter an **Encryption password** with which to encrypt the backup file.
   If a password is specified, the same password will be required to restore the file.
3. Click **Create system backup file**.
4. After the backup file has been prepared, a pop-up window appears and prompts you to save the file (the exact wording depends on your browser). The default name is in the format:
   <software version>_<hardware serial number>_<date>_<time>_backup.tar.gz.
   (The file extension is normally **.tar.gz.enc** if an encryption password is specified. However, if you use Internet Explorer to create an encrypted backup file, the filename extension will be **.tar.gz.gz** by default. These different filename extensions have no operational impact; you can create and restore encrypted backup files using any supported browser.)
   The preparation of the system backup file may take several minutes. Do not navigate away from this page while the file is being prepared.
5. Save the file to a designated location.

Log files are not included in the system backup file.

Restoring a previous backup

To restore the VCS to a previous configuration of system data:

1. Go to **Maintenance > Backup and restore**.
2. In the **Restore** section, **Browse** to the backup file containing the configuration you want to restore.
3. In the **Decryption password** field, enter the password that was used to create the backup file, or leave it blank if the backup file was created without a password.
4. Click **Upload system backup file**.
5. The VCS checks the file and takes you to the **Restore confirmation** page.
   - If the backup file is not valid or an incorrect decryption password is entered, you will receive an error message at the top of the **Backup and restore** page.
   - You are shown the current software version and the number of calls and registrations.
6. Read all the warning messages that appear before proceeding with the restore.
7. Click **Continue with system restore** to continue with the restore process.
   This will restart your system, so ensure that there are no active calls.

After the system restarts, you are taken to the **Login** page.

Diagnostics tools

This section provides information about how to use the diagnostics tools:

- diagnostic logging
- system snapshot
- Network Log and Support Log advanced logging configuration tools
- incident reporting

Configuring diagnostic logging

The **Diagnostic logging** tool (**Maintenance > Diagnostics > Diagnostic logging**) can be used to assist in troubleshooting system issues.

It allows you to generate a diagnostic log of system activity over a period of time, and then to download the log so that it can be sent to your Cisco customer support representative. You can also take and subsequently download a tcpdump while logging is in progress.

To use this tool:

1. Go to **Maintenance > Diagnostics > Diagnostic logging**.
2. Optionally, select **Take tcpdump while logging**.
3. Click **Start new log**.
4. (Optional) Enter some **Marker** text and click **Add marker**.
   - The marker facility can be used to add comment text to the log file before certain activities are performed. This helps to subsequently identify the relevant sections in the downloaded diagnostic log file.
   - You can add as many markers as required, at any time while the diagnostic logging is in progress.
   - Marker text is added to the log with a "`DEBUG_MARKER`" tag.
5. Reproduce the system issue you want to trace in the diagnostic log.
6. Click **Stop logging**.
7. Click **Download log** to save the diagnostic log archive to your local file system. You are prompted to save the archive (the exact wording depends on your browser).

The downloaded diagnostic log archive contains the following files:

- loggingsnapshot.txt - containing log messages in response to the activities performed during the logging period
- xconf_dump.txt - containing information about the configuration of the system at the time the logging was started
- xstat_dump.txt - containing information about the status of the system at the time the logging was started
- (if relevant) diagnostic_logging_tcpdump.pcap - containing the packets captured during the logging period

These files can be sent to your Cisco support representative, if you have been requested to do so.

CAUTION: tcpdump files may contain sensitive information. Only send tcpdump files to trusted recipients. Consider encrypting the file before sending it, and also send the decrypt password out-of-band.

Note that:

- Only one diagnostic log can be produced at a time; creating a new diagnostic log will replace any previously produced log.
- The VCS continually logs all system activity to a unified log file. The diagnostic logging facility works by extracting a portion of this unified log. On busy systems the unified log file may become full over time and will discard historic log data so that it can continue logging current activity. This means that all or part of your diagnostic log could be overwritten. The system will warn you if you attempt to download a partial diagnostic log file.
- The diagnostic log will continue logging all system activity until it is stopped, including over multiple login sessions and system restarts.
- When starting a diagnostic log, the relevant system modules have their log levels automatically set to "debug". You can ignore any "Verbose log levels configured" alarms; the log levels are reset to their original values when you stop logging.
- Diagnostic logging can only be controlled through the web interface; there is no CLI option.
- The tcpdump has a maximum file size limit of 50 MB.

Clustered systems

Diagnostic logging can also be used if your VCS is a part of a cluster, however some activities only apply to the "current" peer (the peer to which you are currently logged in to as an administrator):

- The start and stop logging operations are applied to every peer in the cluster, regardless of the current peer.
- The taking a tcpdump operation is applied to every peer in the cluster, regardless of the current peer.
- Each cluster peer maintains its own unified log, and logs activity that occurs only on that peer.
- Marker text is only applied to log of the current peer.
- You can only download the diagnostic log from the current peer.
- To add markers to other peers' logs, or to download diagnostic logs from other peers, you must log in as an administrator to that other peer.

To collect comprehensive information for debugging purposes, we recommend that you extract the diagnostic log for each peer in a cluster.

Creating a system snapshot

The **System snapshot** page (**Maintenance > Diagnostics > System snapshot**) lets you create files that can be used for diagnostic purposes. The files should be sent to your support representative at their request to assist them in troubleshooting issues you may be experiencing.

You can create several types of snapshot file:

- **Status snapshot**: contains the system's current configuration and status settings.
- **Logs snapshot**: contains log file information (including the Event Log, Configuration Log and Network Log).
- **Full snapshot**: contains a complete download of all system information. The preparation of this snapshot file may take several minutes to complete and may lead to a drop in system performance while the snapshot is in progress.

To create a system snapshot file:

1. Click one of the snapshot buttons to start the download of the snapshot file. Typically your support representative will tell you which type of snapshot file is required.
   - The snapshot creation process will start. This process runs in the background. If required, you can navigate away from the snapshot page and return to it later to download the generated snapshot file.
   - When the snapshot file has been created, a **Download snapshot** button will appear.
2. Click **Download snapshot**. A pop-up window appears and prompts you to save the file (the exact wording depends on your browser). Select a location from where you can easily send the file to your support representative.

Configuring Network Log levels

The **Network Log configuration** page (**Maintenance > Diagnostics > Advanced > Network Log configuration**) is used to configure the log levels for the range of Network Log message modules.

CAUTION: changing the logging levels can affect the performance of your system. You should only change a log level on the advice of Cisco customer support.

To change a logging level:

1. Click on the **Name** of the module whose log level you want to modify.
2. Choose the required **Level** from the drop-down list.
   - A log level of *Fatal* is the least verbose; *Trace* is the most verbose.
   - Each message category has a log level of *Info* by default.
3. Click **Save**.

Configuring Support Log levels

The **Support Log configuration** page (**Maintenance > Diagnostics > Advanced > Support Log configuration**) is used to configure the log levels for the range of Support Log message modules.

CAUTION: changing the logging levels can affect the performance of your system. You should only change a log level on the advice of Cisco customer support.

To change a logging level:

1. Click on the **Name** of the module whose log level you want to modify.
2. Choose the required **Level** from the drop-down list.
   - A log level of *Fatal* is the least verbose; *Trace* is the most verbose.
   - Each message category has a log level of *Info* by default.
3. Click **Save**.

Incident reporting

The incident reporting feature of the VCS automatically saves information about critical system issues such as application failures. You can:

- configure the VCS to send the reports automatically to Cisco customer support
- view the reports from the VCS web interface
- download and send the reports manually to Cisco (usually at the request of Cisco customer support)

The information contained in these reports can then be used by Cisco customer support to diagnose the cause of the failures. All information gathered during this process will be held in confidence and used by Cisco personnel for the sole purpose of issue diagnosis and problem resolution.

Incident reporting caution: privacy-protected personal data

IN NO EVENT SHOULD PRIVACY-PROTECTED PERSONAL DATA BE INCLUDED IN ANY REPORTS TO CISCO.

Privacy-Protected Personal Data means any information about persons or entities that the Customer receives or derives in any manner from any source that contains any personal information about prospective, former, and existing customers, employees or any other person or entity. Privacy-Protected Personal Data includes, without limitation, names, addresses, telephone numbers, electronic addresses, social security numbers, credit card numbers, customer proprietary network information (as defined under 47 U.S.C. § 222 and its implementing regulations), IP addresses or other handset identifiers, account information, credit information, demographic information, and any other information that, either alone or in combination with other data, could provide information specific to a particular person.

PLEASE BE SURE THAT PRIVACY-PROTECTED PERSONAL DATA IS NOT SENT TO CISCO WHEN THE VCS IS CONFIGURED TO AUTOMATICALLY SEND REPORTS.

IF DISCLOSURE OF SUCH INFORMATION CANNOT BE PREVENTED, PLEASE DO NOT USE THE AUTOMATIC CONFIGURATION FEATURE. Instead, copy the data from the Incident detail page and paste it into a text file. You can then edit out any sensitive information before forwarding the file on to Cisco customer support.

Incident reports are always saved locally, and can be viewed via the Incident view page.

Enabling automatic incident reporting

Read the privacy-protected personal data caution before you decide whether to enable automatic incident reporting.

To configure the VCS to send incident reports automatically to Cisco customer support:

1. Go to **Maintenance > Diagnostics > Incident reporting > Configuration**.
2. Set the **Incident reports sending mode** to *On*.
3. Specify the **Incident reports URL** of the web service to which any error reports are to be sent. The default is `https://cc-reports.cisco.com/submitapplicationerror/`.
4. Optional. Specify a **Contact email address** that can be used by Cisco customer support to follow up any error reports.
5. Optional. Specify a **Proxy server** to use for the connection to the incident reporting server.

Use the format (http|https)://address:port/ such as **`http://www.example.com:3128/`**

6. Ensure that **Create core dumps** is *On*; this is the recommended setting as it provides useful diagnostic information.

Note that if the **Incident reports sending mode** is *Off*, incidents will not be sent to any URL but they will still be saved locally and can be viewed and downloaded from the **Incident detail** page.

Sending incident reports manually

Read the privacy-protected personal data caution before you decide whether to send an incident report manually to Cisco.

To send an incident report manually to Cisco customer support:

1. Go to **Maintenance > Diagnostics > Incident reporting > View**.
2. Click on the incident you want to send. You will be taken to the **Incident detail** page.
3. Scroll down to the bottom of the page and click **Download incident report**. You will be given the option to save the file.
4. Save the file in a location from where it can be forwarded to Cisco customer support.

Removing sensitive information from a report

The details in the downloaded incident report are Base64-encoded, so you will not be able to meaningfully view or edit the information within the file.

If you need to edit the report before sending it to Cisco (for example, if you need to remove any potentially sensitive information) you must copy and paste the information from the **Incident detail** page into a text file, and edit the information in that file before sending it to Cisco.

Viewing incident reports

The **Incident view** page (**Maintenance > Diagnostics > Incident reporting > View**) shows a list of all incident reports that have occurred since the VCS was last upgraded. A report is generated for each incident, and the information contained in these reports can then be used by Cisco customer support to diagnose the cause of the failures.

For each report the following information is shown:

Field	Description
Time	The date and time when the incident occurred.
Version	The VCS software version running when the incident occurred.
Build	The internal build number of the VCS software version running when the incident occurred.
State	The current state of the incident: *Pending*: indicates that the incident has been saved locally but not sent. *Sent*: indicates that details of the incident have been sent to the URL specified in the Incident reporting configuration page.

To view the information contained in a particular incident report, click on the report's **Time**. You will be taken to the Incident detail page, from where you can view the report on screen, or download it as an XML file for forwarding manually to Cisco customer support.

Incident report details

The **Incident detail** page (**Maintenance > Diagnostics > Incident reporting > View**, then click on a report's **Time**) shows the information contained in a particular incident report.

This is the information that is sent to the external web service if you have enabled **Incident reports sending mode** (via **Maintenance > Diagnostics > Incident reporting > Configuration**). It is also the same information that is downloaded as a Base64-encoded XML file if you click **Download incident report**.

The information contained in the report is:

Field	Description
Time	The date and time when the incident occurred.
Version	The VCS software version running when the incident occurred.
Build	The internal build number of the VCS software version running when the incident occurred.
Name	The name of the software.
System	The system name (if configured), otherwise the IP address.
Serial number	The hardware serial number.
Process ID	The process ID the VCS application had when the incident occurred.
Release	A true/false flag indicating if this is a release build (rather than a development build).
User name	The name of the person that built this software. This is blank for release builds.
Stack	The trace of the thread of execution that caused the incident.
Debug information	A full trace of the application call stack for all threads and the values of the registers.

CAUTION: for each call stack, the Debug information includes the contents of variables which may contain some sensitive information, for example alias values and IP addresses. If your deployment is such that this information could contain information specific to a particular person, read the caution regarding privacy-protected personal data before you decide whether to enable automatic incident reporting.

Checking the effect of a pattern

The **Check pattern** tool (**Maintenance > Tools > Check pattern**) lets you test whether a pattern or transform you intend to configure on the VCS will have the expected result.

Patterns can be used when configuring:

- Allow lists and Deny lists to specify aliases to be included in the lists
- Transforms to specify aliases to be transformed before any searches take place
- Search rules to filter searches based on the alias being searched for, and to transform an alias before the search is sent to a zone
- Subzone membership rules to determine, based on the address of the device, to which subzone an endpoint is assigned when it registers with the VCS

To use this tool:

1. Enter an **Alias** against which you want to test the transform.
2. In the **Pattern** section, enter the combination of **Pattern type** and **Pattern behavior** for the **Pattern string** being tested.
   - If you select a **Pattern behavior** of *Replace*, you also need to enter a **Replace string**.
   - If you select a **Pattern behavior** of *Add prefix* or *Add suffix*, you also need to enter an **Additional text** string to append/prepend to the **Pattern string**.
   - The VCS has a set of predefined pattern matching variables that can be used to match against certain configuration elements.
3. Click **Check pattern** to test whether the alias matches the pattern.
   The **Result** section shows whether the alias matched the pattern, and displays the resulting alias (including the effect of any transform if appropriate).

Locating an alias

The **Locate** tool (**Maintenance > Tools > Locate**) lets you test whether the VCS can find an endpoint identified by the given alias, within the specified number of "hops", without actually placing a call to that endpoint.

This tool is useful when diagnosing dial plan and network deployment issues.

To use this tool:

1. Enter the **Alias** you want to locate.
2. Enter the **Hop count** for the search.
3. Select the **Protocol** used to initiate the search, either *H.323* or *SIP*. The search may be interworked during the search process, but the VCS always uses the native protocol first to search those target zones and policy services associated with search rules at the same priority, before searching those zones again using the alternative protocol.
4. Select the **Source** from which to simulate the search request. Choose from the *Default Zone* (an unknown remote system), the *Default Subzone* (a locally registered endpoint) or any other configured zone or subzone.
5. Select whether the request should be treated as **Authenticated** or not (search rules can be restricted so that they only apply to authenticated messages).
6. Optionally, you can enter a **Source alias**. Typically, this is only relevant if the routing process uses CPL that has rules dependent on the source alias. (If no value is specified a default alias of `xcom-locate` is used.)
7. Click **Locate** to start the search.
   The status bar shows **Searching...** followed by **Search completed**. The results include the list of zones that were searched, any transforms and Call Policy that were applied, and if found, the zone in which the alias was located.

The locate process performs the search as though the VCS received a call request from the selected **Source zone**. For more information, see the Call routing process [p.196] section.

Port usage

The pages under the **Maintenance > Tools > Port usage** menu show, in table format, all the IP ports that have been configured on the VCS.

The information shown on these pages is specific to that particular VCS and varies depending on the VCS's configuration, the option keys that have been installed and the features that have been enabled.

The information can be sorted according to any of the columns on the page, so for example you can sort the list by IP port, or by IP address.

Each page contains an **Export to CSV** option. This lets you save the information in a CSV (comma separated values) format file suitable for opening in a spreadsheet application.

Note that IP ports cannot be configured separately for IPv4 and IPv6 addresses, nor for each of the two LAN interfaces. In other words, after an IP port has been configured for a particular service, for example SIP UDP, this will apply to all IP addresses of that service on the VCS. Because the tables on these pages list all IP ports and all IP addresses, a single IP port may appear on the list up to 4 times, depending on your VCS configuration.

The port information is split into the following pages:

- Local inbound ports [p.336]
- Local outbound ports [p.336]
- Remote listening ports [p.337]

On a VCS Expressway you can also configure the specific listening ports used for firewall traversal via **Configuration > Traversal > Ports**.

See Port reference [p.416] for more information about the specific ports used by the VCS.

Local inbound ports

The **Local inbound ports** page (**Maintenance > Tools > Port usage > Local inbound ports**) shows the listening IP ports on the VCS that are used to receive inbound communications from other systems.

For each port listed on this page, if there is a firewall between the VCS and the source of the inbound communications, your firewall must allow:

- inbound traffic to the IP port on the VCS from the source of the inbound communications, and
- return traffic from that same VCS IP port back out to the source of the inbound communication.

Note: this firewall configuration is particularly important if this VCS is a traversal client or traversal server, in order for Expressway firewall traversal to function correctly.

Local outbound ports

The **Local outbound ports** page (**Maintenance > Tools > Port usage > Local outbound ports**) shows the source IP ports on the VCS that are used to send outbound communications to other systems.

For each port listed on this page, if there is a firewall between the VCS and the destination of the outbound communications, your firewall must allow:

- outbound traffic out from the IP port on the VCS to the destination of the outbound communications, and
- return traffic from that destination back to the same VCS IP port.

Note: this firewall configuration is particularly important if this VCS is a traversal client or traversal server, in order for Expressway firewall traversal to function correctly.

Remote listening ports

The **Remote listening ports** page (**Maintenance > Tools > Port usage > Remote listening ports**) shows the destination IP addresses and IP ports of remote systems with which the VCS communicates.

Your firewall must be configured to allow traffic originating from the local VCS to the remote devices identified by the IP addresses and IP ports listed on this page.

Note: there are other remote devices not listed here to which the VCS will be sending media and signaling, but the ports on which these devices receive traffic from the VCS is determined by the configuration of the destination device, so they cannot be listed here. If you have opened all the ports listed in the Local outbound ports page, the VCS will be able to communicate with all remote devices. You only need to use the information on this page if you want to limit the IP ports opened on your firewall to these remote systems and ports.

Network utilities

This section provides information about how to use the network utility tools:

- Ping: allows you to check that a particular host system is contactable from the VCS and that your network is correctly configured to reach it.
- Traceroute: allows you to discover the details of the route taken by a network packet sent from the VCS to a particular destination host system.
- Tracepath: allows you to discover the path taken by a network packet sent from the VCS to a particular destination host system.
- DNS lookup: allows you to check which domain name server (DNS server) is responding to a request for a particular hostname.

Ping

The **Ping** tool (**Maintenance > Tools > Network utilities > Ping**) can be used to assist in troubleshooting system issues.

It allows you to check that a particular host system is contactable and that your network is correctly configured to reach it. It reports details of the time taken for a message to be sent from the VCS to the destination host system.

To use this tool:

1. In the **Host** field, enter the IP address or hostname of the host system you want to try to contact.
2. Click **Ping**.

A new section will appear showing the results of the contact attempt. If successful, it will display the following information:

Host	The hostname and IP address returned by the host system that was queried.
Response time (ms)	The time taken (in ms) for the request to be sent from the VCS to the host system and back again.

Traceroute

The **Traceroute** tool (**Maintenance > Tools > Network utilities > Traceroute**) can be used to assist in troubleshooting system issues.

It allows you to discover the route taken by a network packet sent from the VCS to a particular destination host system. It reports the details of each node along the path, and the time taken for each node to respond to the request.

To use this tool:

1. In the **Host** field, enter the IP address or hostname of the host system to which you want to trace the path.
2. Click **Traceroute**.

A new section will appear with a banner stating the results of the trace, and showing the following information for each node in the path:

TTL	(Time to Live). This is the hop count of the request, showing the sequential number of the node.
Response	This shows the IP address of the node, and the time taken (in ms) to respond to each packet received from the VCS. *** indicates that the node did not respond to the request.

The route taken between the VCS and a particular host may vary for each traceroute request.

Tracepath

The **Tracepath** tool (**Maintenance > Tools > Network utilities > Tracepath**) can be used to assist in troubleshooting system issues.

It allows you to discover the route taken by a network packet sent from the VCS to a particular destination host system.

To use this tool:

1. In the **Host** field, enter the IP address or hostname of the host system to which you want to trace the route.
2. Click **Tracepath**.

A new section will appear with a banner stating the results of the trace, and showing the details of each node along the path, the time taken for each node to respond to the request, and the maximum transmission units (MTU).

The route taken between the VCS and a particular host may vary for each tracepath request.

DNS lookup

The **DNS lookup** tool (**Maintenance > Tools > Network utilities > DNS lookup**) can be used to assist in troubleshooting system issues.

It allows you to query DNS for a supplied hostname and display the results of the query if the lookup was successful.

To use this tool:

1. In the **Host** field, enter either:
   - the name of the host you want to query, or
   - an IPv4 or IPv6 address if you want to perform a reverse DNS lookup
2. In the **Query type** field, select the type of record you want to search for:
   (for reverse lookups the **Query type** is ignored - the search automatically looks for PTR records)

Option	Searches for...
All	any type of record
A (IPv4 address)	a record that maps the hostname to the host's IPv4 address

Option	Searches for...
AAAA (IPv6 address)	a record that maps the hostname to the host's IPv6 address
SRV (services)	SRV records (which includes those specific to H.323, SIP, Unified Communications and TURN services, see below)
NAPTR (Name authority pointer)	a record that rewrites a domain name (into a URI or other domain name for example)

3. By default the system will submit the query to all of the system's default DNS servers (**System > DNS**). To query specific servers only, set **Check against the following DNS servers** to *Custom* and then select the DNS servers you want to use.
4. Click **Lookup**.

A separate DNS query is performed for each selected **Query type**. The domain that is included within the query sent to DNS depends upon whether the supplied **Host** is fully qualified or not (a fully qualified host name contains at least one "dot"):

- If the supplied **Host** is fully qualified:
  - DNS is queried first for **Host**
  - If the lookup for **Host** fails, then an additional query for **Host.<system_domain>** is performed (where **<system_domain>** is the **Domain name** as configured on the **DNS** page)
- If the supplied **Host** is not fully qualified:
  - DNS is queried first for **Host.<system_domain>**
  - If the lookup for **Host.<system_domain>** fails, then an additional query for **Host** is performed

For SRV record type lookups, multiple DNS queries are performed. An SRV query is made for each of the following _service._protocol combinations:

- _h323ls._udp.<domain>
- _h323rs._udp.<domain>
- _h323cs._tcp.<domain>
- _sips._tcp.<domain>
- _sip._tcp.<domain>
- _sip._udp.<domain>
- _collab-edge._tls
- _cuplogin._tcp
- _cisco-uds._tcp
- _turn._udp.<domain>
- _turn._tcp.<domain>

In each case, as for all other query types, either one or two queries may be performed for a <domain> of either **Host** and/or **Host.<system_domain>**.

Results

A new section will appear showing the results of all of the queries. If successful, it will display the following information:

Query type	The type of query that was sent by the VCS.
Name	The hostname contained in the response to the query.
TTL	The length of time (in seconds) that the results of this query will be cached by the VCS.
Class	`IN` (internet) indicates that the response was a DNS record involving an internet hostname, server or IP address.
Type	The record type contained in the response to the query.
Response	The content of the record received in response to the query for this **Name** and **Type**.

Restarting, rebooting and shutting down

The **Restart options** page (**Maintenance > Restart options**) allows you to restart, reboot or shut down the VCS without having physical access to the hardware.

CAUTION: do not restart, reboot or shut down the VCS while the red ALM LED on the front of the unit is on. This indicates a hardware fault. Contact your Cisco customer support representative.

Restarting

The restart function shuts down and restarts the VCS application software, but not the operating system or hardware. A restart takes approximately 3 minutes.

A restart is typically required in order for some configuration changes to take effect, or when the system is being added to, or removed from, a cluster. In these cases a system alarm is raised and will remain in place until the system is restarted.

If the VCS is part of a cluster and other peers in the cluster also require a restart, we recommend that you wait until each peer has restarted before restarting the next peer.

Rebooting

The reboot function shuts down and restarts the VCS application software, operating system and hardware. A reboot takes approximately 5 minutes.

Reboots are normally only required after software upgrades and are performed as part of the upgrade process. A reboot may also be required when you are trying to resolve unexpected system errors.

Shutting down

A shutdown is typically required if you want to unplug your unit, prior to maintenance or relocation for example. The system must be shut down before it is unplugged. Avoid uncontrolled shutdowns, in particular the removal of power to the system during normal operation.

After the system has been shut down, the only way it can be restarted (unless it is a virtual appliance) is by pressing the soft power button on the unit itself. You must therefore have physical access to the unit if you want to restart it after it has been shut down.

Effect on active calls and registrations

Any of these restart options will cause all active calls and registrations to be terminated. (If the VCS is part of a cluster, only those calls for which the VCS is taking the signaling will be terminated.)

For this reason, the **System status** section displays the number of current calls and registrations, so you can check these before you restart the system. If you do not restart the system immediately, you should refresh this page before restarting to check the current status of calls and registrations.

If **Mobile and remote access** is enabled, the number of currently provisioned sessions is displayed (VCS Control only).

Restarting, rebooting or shutting down using the web interface

To restart the VCS using the web interface:

1. Go to **Maintenance > Restart options**.
2. Check the number of calls and registrations currently in place.
3. Click **Restart**, **Reboot** or **Shutdown** as appropriate and confirm the action.

Sometimes only one of these options, such as **Restart** for example, may be available. This typically occurs when you access the **Restart options** page after following a link in an alarm or a banner message.

- Restart/reboot: the **Restarting**/**Rebooting** page appears, with an orange bar indicating progress. After the system has successfully restarted or rebooted, you are automatically taken to the **Login** page.
- Shutdown: the **Shutting down** page appears.
  This page remains in place after the system has successfully shut down but any attempts to refresh the page or access the VCS will be unsuccessful.

Developer resources

The VCS includes some features that are intended for the use of Cisco support and development teams only. Do not access these pages unless it is under the advice and supervision of your Cisco support representative.

CAUTION: incorrect usage of the features on these pages could cause the system operation to become unstable, cause performance problems and cause persistent corruption of system configuration.

These features are:

- Debugging and system administration tools [p.344]
- Experimental menu [p.344]

Debugging and system administration tools

CAUTION: these features are not intended for customer use unless on the advice of a Cisco support representative. Incorrect usage of these features could cause the system operation to become unstable, cause performance problems and cause persistent corruption of system configuration.

The VCS includes a number of debugging and system admin tools that allow administrators to inspect what is happening at a detailed level on a live system, including accessing and modifying configuration data and accessing network traffic.

To access these tools:

1. Open an SSH session.
2. Log in as admin or root as required.
3. Follow the instructions provided by your Cisco support representative.

Experimental menu

The VCS web interface contains a number of pages that are not intended for use by customers. These pages exist for the use of Cisco support and development teams only. Do not access these pages unless it is under the advice and supervision of your Cisco support representative.

CAUTION: incorrect usage of the features on these pages could cause the system operation to become unstable, cause performance problems and cause persistent corruption of system configuration.

To access these pages:

1. Go to `https://<VCS host name or IP address>/setaccess`.
   The **Set access** page appears.
2. In the **Access password** field, enter `qwertsys`.
3. Click **Enable access**.

A new top-level **Experimental** menu will appear to the right of the existing menu items.

Overview and status information

You can view information about the current status, registrations, current calls and call history, and configuration of the VCS by using the **Status** menu options.

Status overview 346
System information 348
Ethernet status 349
IP status 350
Resource usage 351
Registration status 353
Call status 355
B2BUA calls 357
Search history 358
Search details 359
Local Zone status 360
Zone status 361
Bandwidth 362
Policy server status and resiliency 363
TURN relay usage 364
Unified Communications status 365
Presence 366
Lync B2BUA 368
TMS Provisioning Extension service status 369
Starter Pack Provisioning Server status 373
Managing alarms 374
Logs 375
Hardware status 379

Status overview

The **Overview** page (**Status > Overview**) provides an overview of the current status of the VCS (or VCS cluster, if applicable). This page is displayed by default after logging in to the VCS as an administrator.

The following information is displayed:

Field	Description
System information: many of the items in this section are configurable; click on the item name to go to its configuration page.	
System name	The name that has been assigned to the VCS.
Up time	The amount of time that has elapsed since the system last restarted.
Software version	The version of software that is currently installed on the VCS.
IPv4 address	The VCS's IPv4 addresses.
IPv6 address	The VCS's IPv6 addresses.
Options	The maximum number of calls and registrations, and the availability of additional VCS features such as TURN Relays, FindMe™, Device Provisioning and Advanced Networking, are controlled through the use of option keys. This section shows all the options that are currently installed on the VCS.

Resource usage

This section provides statistics about the current and cumulative license usage for calls and registrations.

It shows current and peak (highest concurrent) usage broken down by:

- Unified CM remote session calls (if Unified Communications **Mobile and remote access** is enabled)
- Traversal calls
- Non-traversal calls
- SIP traversal audio-only calls
- Registrations
- TURN relays (VCS Expressway only)

It also displays resource and license usage information:

- Monitored resource usage, expressed as a percentage of the system capacity.
- Current and peak license usage, expressed as a percentage of the available licenses for each license type. Each traversal call license allows either 1 video call or 2 audio-only SIP calls. Hence, a 100 traversal call license would allow, for example, 90 video and 20 SIP audio-only simultaneous calls. Any other audio-only call (non-traversal, H.323 or interworked) will consume a standard video call license (traversal or non-traversal as appropriate).

You can view details of current calls or registrations by clicking on the relevant item in the section.

All statistics are based on data since the system was last restarted. The information on this page refreshes automatically every 5 seconds.

Total usage statistics are also shown (unless Unified Communications **Mobile and remote access** is enabled, in which case this data is shown on the **Resource usage** page only).

Clustered VCS systems

If the VCS is part of a cluster, then details for each peer are shown as well as totals for the entire cluster.

See About clusters [p.182] for more information.

System information

The **System information** page (**Status > System > Information**) provides details of the software, hardware, and time settings of the VCS.

Many of the items in the **System information** and **Time information** sections are configurable; click on the item name to be taken to its configuration page.

The following information is displayed:

Field	Description
System information section:	
System name	The name that has been assigned to the VCS.
Product	This identifies the VCS.
Software version	The version of software that is currently installed on the VCS.
Software build	The build number of this software version.
Software release date	The date on which this version of the software was released.
Software name	The internal reference number for this software release.
Software options	The maximum number of calls, and the availability of additional VCS features such as FindMe™, Device Provisioning and Advanced Networking, are controlled through the use of option keys. This section shows all the optional features currently installed on the VCS.
Hardware version	The version number of the hardware on which the VCS software is installed.
Serial number	The serial number of the hardware or virtual machine on which the VCS software is installed.
Time information section:	
Up time	The amount of time that has elapsed since the system last restarted.
System time (UTC)	The time as determined by the NTP server. If no NTP server is configured, this shows *Time Not Set*.
Time zone	The time zone that has been configured on the **Time** page.
Local time	If an NTP server is configured, the system time is shown in local time (UTC adjusted according to the local time zone). If no NTP server is configured, the time according to the VCS's operating system is shown.
Active sessions section:	
Administrator sessions	The number of current active administrator sessions. Click on the link to see the list of active sessions.
FindMe sessions	The number of current active FindMe sessions. Click on the link to see the list of active sessions.

Ethernet status

The **Ethernet** page (**Status > System > Ethernet**) shows the MAC address and Ethernet speed of the VCS.

The page displays the following information for the LAN 1 port and, if the Advanced Networking option key has been installed, the LAN 2 port:

Field	Description
MAC address	The MAC address of the VCS's Ethernet device for that LAN port.
Speed	The speed of the connection between the LAN port on the VCS and the Ethernet switch.

The Ethernet speed can be configured via the Ethernet page.

IP status

The **IP status** page (**Status > System > IP**) shows the current IP settings of the VCS.

The following information is displayed:

Field	Description
IP section:	
Protocol	Indicates the IP protocol supported by the VCS: ■ *IPv4*: it only accepts registrations from endpoints using an IPv4 address, and only takes calls between two endpoints communicating via IPv4. It communicates with other systems via IPv4 only. ■ *IPv6*: it only accepts registrations from endpoints using an IPv6 address, and only takes calls between two endpoints communicating via IPv6. It communicates with other systems via IPv6 only. ■ *Both*: it accepts registrations from endpoints using either an IPv4 or IPv6 address, and takes calls using either protocol. If a call is between an IPv4-only and an IPv6-only endpoint, the VCS acts as an IPv4 to IPv6 gateway. It communicates with other systems via either protocol.
IPv4 gateway	The IPv4 gateway used by VCS.
IPv6 gateway	The IPv6 gateway used by VCS.
Advanced Networking	Indicates whether the second LAN port has been enabled. This is done by installing the **Advanced Networking** option key.
LAN 1	Shows the IPv4 address and subnet mask, and IPv6 address of the LAN 1 port.
LAN 2	If the **Advanced Networking** option key has been installed, this shows the IPv4 address and subnet mask, and IPv6 address of the LAN 2 port.
DNS section:	
Server 1..5 address	The IP addresses of each of the DNS servers that are queried when resolving domain names. Up to 5 DNS servers may be configured.
Domain	Specifies the name to be appended to the host name before a query to the DNS server is executed.

The IP settings can be configured via the IP page.

Resource usage

The **Resource usage** page (**Status > System > Resource usage**) provides statistics about the current and cumulative license usage for calls and registrations.

It shows current and peak (highest concurrent) usage broken down by:

- Unified CM remote session calls (if Unified Communications **Mobile and remote access** is enabled)
- Traversal calls
- Non-traversal calls
- SIP traversal audio-only calls
- Registrations
- TURN relays (VCS Expressway only)

It also displays resource and license usage information:

- Monitored resource usage, expressed as a percentage of the system capacity.
- Current and peak license usage, expressed as a percentage of the available licenses for each license type. Each traversal call license allows either 1 video call or 2 audio-only SIP calls. Hence, a 100 traversal call license would allow, for example, 90 video and 20 SIP audio-only simultaneous calls. Any other audio-only call (non-traversal, H.323 or interworked) will consume a standard video call license (traversal or non-traversal as appropriate).

You can view details of current calls or registrations by clicking on the relevant item in the section.

All statistics are based on data since the system was last restarted. The information on this page refreshes automatically every 5 seconds.

Clustered VCS systems

If the VCS is part of a cluster, details for each peer are shown as well as totals for the entire cluster.

The following types of licenses are pooled for use by any peer in a cluster, irrespective of which peer the licenses are installed on:

- Traversal or non-traversal call licenses
- TURN relay licenses

License usage is limited by the maximum physical capacity of each VCS system according to the type of appliance or VM:

Table 6: Maximum physical capacity per peer

	Small / Medium systems	Large systems
Traversal calls	150	500
Non-traversal calls	750	750
Registrations	2500	5000
TURN relays *	1800	6000

* On a Large system, the total TURN capacity of 6000 relays is spread evenly across 6 ports; each port is limited to handling 1000 relays. On a Small/Medium system, there is a single TURN port that handles up to 1800 relays.

Note that each VCS comes pre-installed with 2,500 registration licenses, and that registration licenses are not shared across a cluster.

If two endpoints are registered to different cluster peers, and a SIP call is made between them, two non-traversal licenses are used. If the call is made over H.323, only one non-traversal license is used.

You can cluster up to 6 VCS systems to increase capacity by a maximum factor of 4 (see Performance capabilities [p.381] for more information).

If a cluster peer becomes unavailable, the shareable licenses installed on that peer remain available to the rest of the cluster peers for two weeks from the time the cluster lost contact with the peer. This will maintain the overall license capacity of the cluster — however, note that each peer is still limited by its physical capacity as listed above. After this two week period, the licenses associated with the unavailable peer are removed from the cluster. To maintain the same capacity for your cluster, you should ensure that either the problem with the peer is resolved or new option keys are installed on another peer in the cluster.

Note that you are also limited to the number of call license option keys that can be installed (purchased) per VCS peer as follows:

Table 7: Maximum call license option keys that can be installed (purchased) per peer

	Small / Medium systems	Large systems
Traversal calls	100	500
Non-traversal calls	500	500
TURN relays	1800	6000

You can see a summary of all of the call, registration and TURN relay licenses installed on each cluster peer by going to the **Option keys** page and scrolling down to the **Current licenses** section.

See About clusters [p.182] for more information.

Registration status

Registration status information can be displayed for both current and historic registrations. If the VCS is part of a cluster, all registrations that apply to any peer in the cluster are shown.

- The **Registrations by device** page (**Status > Registrations > By device**) lists each device currently registered with the VCS, and allows you to remove a device's registration. If the VCS is part of a cluster, all registrations across the cluster are shown. Note that an H.323 device can register with more than one alias; in such cases this page will show only one alias and (when present) one E.164 number for that device. Note also that a single device can support both the SIP and H.323 protocols; in such a case the SIP registration and the H.323 registration will appear as separate entries on this page.
- The **Registrations by alias** page (**Status > Registrations > By alias**) lists all the aliases, E.164 numbers and prefixes used by all endpoints and systems currently registered with the VCS. Note that a single H.323 device can register with more than one alias, and each will appear as a separate entry on this page.
- The **Registration history** page (**Status > Registrations > History**) lists all the registrations that are no longer current. It contains all historical registrations since the VCS was last restarted.

The following information is displayed:

Field	Description
Name	For H.323 devices, this is one of its aliases. If the device has registered with more than one alias, this will be (in order of preference) its H.323 ID, URI or email address. For MCUs and Gateways this will be its alias or, if it has not registered an alias, one of its prefixes. For SIP devices, this is its SIP AOR.
Number	For H.323 devices that have registered one or more E.164 numbers, the first will be shown here. For SIP devices this will always be blank because they cannot register E.164 numbers. (This is shown in the **Alias** column in the registration by alias view.)
Alias	The H.323 alias, E.164 number, prefix or SIP AOR registered by a device. (Registration by alias view only.)
Type	Indicates the nature of the registration. This will most commonly be Endpoint, MCU, Gateway, or SIP UA. The registration by alias view shows whether the alias is an H.323 ID, E.164 number, prefix or SIP AOR.
Protocol	Indicates whether the registration is for a SIP or H.323 device.
Creation time	The date and time at which the registration was accepted. If an NTP server has not been configured, this will say *Time not set*.
Address	For H.323 devices this is its RAS address, and for SIP UAs it is the Contact address presented in the REGISTER request.
End time	The date and time at which the registration was terminated. (Registration history view only.)
Duration	The length of time that the registration was in place. (Registration history view only.)
Reason	The reason why the registration was terminated. (Registration history view only.)
Peer	Identifies the cluster peer to which the device is registered.
Actions	Click **View** to go to the **Registration details** page to see further detailed information about the registration.

Registration details

The information shown on the **Registration details** page depends on the device's protocol, and whether the registration is still current. For example, SIP registrations include the AOR, contact and, if applicable, public GRUU details. H.323 registration details include all of the registered aliases. It also provides related tasks that let you **View active calls involving this registration** and **View previous calls involving this registration**; these options take you to the **Calls by registration** page, showing the relevant current or historic call status information filtered for that particular registration.

Unregistering and blocking devices

The registration status pages provide options to manually unregister and block devices.

- Click **Unregister** to unregister the device. Note that the device may automatically re-register after a period of time, depending on its configuration. To prevent this, you must also use a registration restriction policy such as an Allow List or Deny List.
- Click **Unregister and block** to unregister the device and add the alias to the Deny List page, thus preventing the device from automatically re-registering. (This option is only available if the **Restriction policy** is set to *Deny List*.)

Note that if your VCS is part of a cluster you have to be logged into the peer to which the device is registered to be able to unregister it.

Call status

Call status information can be displayed for both current and completed calls:

- **Current calls**: the **Call status** page (**Status > Calls > Calls**) lists all the calls currently taking place to or from devices registered with the VCS, or that are passing through the VCS.
- **Completed calls**: the **Call history** page (**Status > Calls > History**) lists all the calls that are no longer active. The list is limited to the most recent 500 calls, and only includes calls that have taken place since the VCS was last restarted.

The same set of call status information is also shown on the **Calls by registration** page (accessed via the **Registration details** page).

If the VCS is part of a cluster, all calls that apply to any peer in the cluster are shown, although the list is limited to the most recent 500 calls per peer.

Call summary information

The following summary information is displayed initially:

Field	Description
Start time	The date and time when the call was placed.
End time	The date and time when the call ended (completed calls only).
Duration	The length of time of the call.
Source	The alias of the device that placed the call. (If the call passes through more than one VCS and User Policy is enabled, the caller's FindMe ID may be displayed instead.)
Destination	The alias dialed from the device. This may be different from the alias to which the call was placed, which may have been transformed (due to pre-search transforms, zone transforms or User Policy).
Type	Indicates either a traversal or non-traversal call.
Protocol	Shows whether the call used H.323, SIP, or both protocols. For calls passing through the B2BUA, this may show "Multiple components"; you can view the call component summary section to see the protocol of each individual call component.
Status	The reason the call ended (completed calls only).
Peer	Identifies the cluster peer through which the call is being made.
Actions	Click **View** to see further information about the call, including a list of all of the call components that comprise that call.

Call components summary information

After selecting a call from the primary list (as described above) you are shown further details of that call, including a list of all of the call components that comprise that call.

Each call component may be one of the following types:

- *VCS*: a standard VCS call
- *B2BUA*: a call component that is routed through the B2BUA to apply a media encryption policy or ICE messaging support
- *Microsoft Lync B2BUA*: a call component that is routed through the Microsoft Lync B2BUA

You can view full details of each call component by clicking on the **Local call serial number** associated with each component. This will open the **Call details** page which lists full information about that component, including all call legs and sessions. It also provides further links to the **Call media** page which lists the individual media channels (audio, video, data and so on) for the most relevant session for a traversal call.

If the VCS is part of a cluster and the call passes through two cluster peers, you can click **View associated call on other cluster peer** to see the details of the other leg of the call.

Identifying mobile and remote access calls

The call status and call history pages show all call types: Unified CM remote sessions (if mobile and remote access is enabled) as well as VCS traversal and non-traversal calls.

To distinguish between the call types you must drill down into the call components. Mobile and remote access calls have different component characteristics depending on whether the call is being viewed on the VCS Control or VCS Expressway:

- On a VCS Control, a Unified CM remote session will have 3 components (as it uses the B2BUA to enforce media encryption). One of the VCS components will route the call through one of the automatically generated neighbor zones (with a name prefixed by either **CEtcp** or **CEtls**) between VCS and Unified CM.
- On a VCS Expressway, there will be one component and that will route the call through the **CollaborationEdgeZone**.

Note that if both endpoints are outside of the enterprise (i.e. off premises), you will see this treated as 2 separate calls.

Disconnecting calls

Click **Disconnect** to disconnect the selected calls. Note that if your VCS is part of a cluster you have to be logged into the peer through which the call is associated to be able to disconnect the call.

Call disconnection works differently for H.323 and SIP calls due to differences in the way the protocols work:

- H.323 calls, and interworked H.323 to SIP calls: the **Disconnect** command will actually disconnect the call.
- SIP to SIP calls: the **Disconnect** command will cause the VCS to release all resources used for the call and the call will appear on the system as disconnected. However, SIP calls are peer-to-peer and as a SIP proxy the VCS has no authority over the endpoints. Although releasing the resources may have the side-effect of disconnecting the SIP call, it is also possible that the call signaling, media or both may stay up (depending on the type of call being made). The call will not actually disconnect until the SIP endpoints involved have also cleared their resources.
- SIP calls via the B2BUA: as the B2BUA can control the state of a call, if you disconnect the leg of the call that is passing through the B2BUA (where the **Type** is *B2BUA*), the call will fully disconnect. Note that the call may take a few seconds to disappear from the **Call status** page — you may have to refresh the page on your browser.

B2BUA calls

The **B2BUA calls** page (**Status > Calls > Calls** or **Status > Calls > History**, then click **View** for a particular B2BUA call) provides overview information about a call routed through the B2BUA.

Calls are routed through the B2BUA if:

- a media encryption policy (any encryption setting other than *Auto*) has been applied to the call
- ICE messaging support has been triggered
- the Microsoft Lync B2BUA service is enabled and the call has been routed through the **To Microsoft Lync server via B2BUA** neighbor zone

Note that for Microsoft Lync B2BUA calls, you can click the **Corresponding VCS call** link to see details of the leg passing through the VCS.

Viewing B2BUA call media details

The **B2BUA call media** page (accessed from the B2BUA calls page by clicking **View media statistics for this call**) shows information about the media channels (audio and video) that made up the call passing through the B2BUA. For calls using the Microsoft Lync B2BUA, this comprises legs between the VCS, the Lync server and, if applicable, the transcoder.

Search history

The **Search history** page (**Status > Search history**) lists the most recent 255 searches that have taken place since the VCS was last restarted.

About searches

Before a call can be placed, the endpoint being called must be located. The VCS sends and receives a series of messages during its attempt to locate the endpoint being called; these messages are each known as searches. An individual call can have one or more searches associated with it, and these searches can be of different types.

The type of search message that is sent depends on whether the call is for SIP or H.323, and whether the call request was received locally or from an external zone, as follows:

- H.323 calls that are placed locally: two messages are sent - the first is an **ARQ** which locates the device being called, and the second is the call **Setup** which sends a request to the device asking it to accept the call. Each message shows up as a separate search in the **Search history** page, but only the **Setup** message is associated with a particular call.
- H.323 searches originating from external zones: an **LRQ** will appear in the **Search history** page.
- SIP: a single message is sent in order to place a call: this is either a SIP **INVITE** or a SIP **OPTIONS**.

Note that an individual call can have one or more searches associated with it, and these searches can be of different types. Each search has an individual *Search ID*; each call has an individual *Call Tag* (see Identifying calls [p.243]).

The VCS supports up to 500 concurrent searches.

Search history list

The search history summary list shows the following information:

Field	Description
Start time	The date and time at which the search was initiated.
Search type	The type of message being sent.
Source	The alias of the endpoint that initiated the call.
Destination	The alias that was dialed from the endpoint. This may be different from the alias to which the call was actually placed, as the original alias may have been transformed either locally or before the neighbor was queried.
Status	Indicates whether or not the search was successful.
Actions	Allows you to click **View** to go to the Search details page, which lists full details of this search.

Filtering the list

To limit the list of searches, enter one or more characters in the **Filter** field and click **Filter**. Only those searches that contain (in any of the displayed fields) the characters you entered are shown.

To return to the full list of searches, click **Reset**.

Search details

The **Search details** page lists full information about either an individual search, or all searches associated with a single call (depending on how you reached the page). The information shown includes:

- the subzones and zones that were searched
- the call path and hops
- any transforms that were applied to the alias being searched for
- use of policies such as Admin Policy or User Policy (FindMe)
- any policy services that were used

Other information associated with the search and (if it was successful) the resulting call can be viewed via the links in the **Related tasks** section at the bottom of the page:

- **View all events associated with this call tag** takes you to the Event Log page, filtered to show only those events associated with the Call Tag relating to this search.
- **View call information associated with this call tag** takes you to the **Call details** page, where you can view overview information about the call.
- **View all searches associated with this call tag** is shown if you are viewing details of an individual search and there are other searches associated with the same call. It takes you to a new **Search details** page which lists full information about all the searches associated with the call's Call Tag.

Local Zone status

The **Local Zone status** page (**Status > Local Zone**) lists all of the subzones on the VCS that together make up the Local Zone. This always includes the Default Subzone and the Traversal Subzone, plus any other subzones that have been configured.

The following information is displayed:

Field	Description
Subzone name	The names of each subzone currently configured on this VCS. Clicking on a **Subzone name** takes you to the configuration page for that subzone.
Registrations	The number of devices currently registered within the subzone. Note that devices cannot be registered to the Traversal Subzone.
Calls	The number of calls currently passing through the subzone. Note that a single call may pass through more than one subzone, depending on the route it takes. For example, traversal calls from a locally registered endpoint will always pass through the Traversal Subzone, so they will show up twice; once in the originating subzone and once in the Traversal Subzone.
Bandwidth used	The total amount of bandwidth used by all calls passing through the subzone.

Zone status

The **Zone status** page (**Status > Zones**) lists all of the external zones on the VCS. It shows the number of calls and amount of bandwidth being used by each zone.

The list of zones always includes the Default Zone, plus any other zones that have been created.

The following information is displayed:

Field	Description
Name	The names of each zone currently configured on this VCS. Clicking on a zone **Name** takes you to the configuration page for that zone.
Type	The type of zone.
Calls	The number of calls currently passing out to or received in from each zone.
Bandwidth used	The total amount of bandwidth used by all calls passing out to or received in from each zone.
H.323 / SIP status	Indicates the zone's H.323 or SIP connection status: ■ *Off*: the protocol is disabled at either the zone or system level ■ *Active*: the protocol is enabled for that zone and it has at least one active connection; if multiple connections are configured and some of those connections have failed, the display indicates how many of the connections are *Active* ■ *On*: applies to DNS and ENUM zones only and indicates that the protocol is enabled for that zone ■ *Failed*: the protocol is enabled for that zone but its connection has failed ■ *Checking*: the protocol is enabled for that zone and the system is currently trying to establish a connection
Search rule status	This area is used to indicate if that zone is not a target of any search rules.

Bandwidth

Link status

The **Link status** page (**Status > Bandwidth > Links**) lists all of the links currently configured on the VCS, along with the number of calls and the bandwidth being used by each link.

The following information is displayed:

Field	Description
Name	The name of each link. Clicking on a link **Name** takes you to the configuration page for that link.
Calls	The total number of calls currently traversing the link. Note that a single call may traverse more than one link, depending on how your system is configured.
Bandwidth used	The total bandwidth of all the calls currently traversing the link.

Pipe status

The **Pipe status** page (**Status > Bandwidth > Pipes**) lists all of the pipes currently configured on the VCS, along with the number of calls and the bandwidth being used by each pipe.

The following information is displayed:

Field	Description
Name	The name of each pipe. Clicking on a pipe **Name** takes you to the configuration page for that pipe.
Calls	The total number of calls currently traversing the pipe. Note that a single call may traverse more than one pipe, depending on how your system is configured.
Bandwidth used	The total bandwidth of all the calls currently traversing the pipe.

Policy server status and resiliency

You must specify a **Status path** when configuring the VCS's connection to a policy server. It identifies the path from where the status of the remote service can be obtained. By default this is *status*.

Up to 3 different policy server addresses may be specified. The VCS polls each address on the specified path every 60 seconds to test the reachability of that address. The VCS accepts standard HTTP(S) response status codes. (Note that the developers of the policy service must ensure that this provides the appropriate status of the service.)

If a server does not respond to status requests, VCS will deem that server's status to be in a failed state and it will not be queried for policy service requests until it returns to an active state. Its availability will not be checked again until after the 60 second polling interval has elapsed.

When the VCS needs to make a policy service request, it attempts to contact the service via one of the configured server addresses. It will try each address in turn, starting with **Server 1 address**, and then if necessary - and if configured - via the **Server 2 address** and then the **Server 3 address**. The VCS only tries to use a server address if it is in an active state, based on its most recent status query.

The VCS has a non-configurable 30 seconds timeout value for each attempt it makes to contact a policy server. However, if the server is not reachable, the connection failure will occur almost instantaneously. (Note that the TCP connection timeout is usually 75 seconds. Therefore, in practice, a TCP connection timeout is unlikely to occur as either the connection will be instantly unreachable or the 30 second request timeout will occur first.)

The VCS uses the configured **Default CPL** if it fails to contact the policy service via any of the configured addresses.

Note that this method provides resiliency but not load balancing i.e. all requests will be sent to **Server 1 address**, providing that server address is functioning correctly.

Viewing policy server status via the VCS

A summarized view of the status of the connection to each policy service can be viewed by going to the **Policy service status** page (**Status > Policy services**).

The set of policy services includes all of the services defined on the **Policy services** page (**Configuration > Dial plan > Policy services**), plus if a remote service has been selected for either Call Policy or for registration restriction policy it will also display a **Call Policy** or a **Registration restriction** service respectively.

The following information is displayed:

Field	Description
Name	The name of the policy service. Clicking on a **Name** takes you to the configuration page for that service where you can change any of the settings or see the details of any connection problems.
URL	The address of the service. Note that each service can be configured with multiple server addresses for resiliency. This field displays the server address currently selected for use by the VCS.
Status	The current status of the service based on the last attempt to poll that server.
Last used	Indicates when the service was last requested by the VCS.

TURN relay usage

The **TURN relay usage** page (**Status > TURN relay usage**) provides a summary list of all the clients that are connected to the TURN server.

Note that TURN services are available on VCS Expressway systems only; they are configured via **Configuration > Traversal > TURN**.

The following information is displayed:

Field	Description
Client	The IP address of the client that requested the relay.
Media destinations	The address of destination system the media is being relayed to.
Connection protocol	Indicates if the client is connected over TCP or UDP.
Relays	Number of current relays being used by the client.

Viewing TURN relay details for a client connection

You can click on a specific client to see all of the relays and ports that it is using.

For each relay, its associated relay peer address/port is displayed. It also displays each relay's associated peer address/port (the TURN server relay port from which the media is being sent to the destination system). To see specific statistics about a relay, click **View** to go to the TURN relay summary page.

TURN relay summary

The **TURN relay summary** page provides overview information about a particular relay, including a summary count of the permissions, channels and requests associated with that relay.

To access this page, go to **Status > TURN relay usage**, then click **View** for a TURN client, and then **View** again for the required relay.

Further detailed information about the relay can be viewed by using the links in the **Related tasks** section at the bottom of the page. These let you:

- **View permissions for this relay**: information about the permissions that have been defined on this relay.
- **View channels for this relay**: information about the channel bindings that have been defined on this relay.
- **View counters for this relay**: information about the number of TURN requests received, and the number of TURN success or error responses sent. It also shows counts of the number of packets forwarded to and from the client that allocated this relay.

Unified Communications status

The **Unified Communications status** page (**Status > Unified Communications**) shows the current status of the Unified Communications services including:

- the number of configured Unified CM and IM&P servers (VCS Control only)
- the current number of active provisioning sessions (VCS Control only)
- the number of current calls
- all the domains and zones that have been configured for Unified Communications services

If any configuration or connectivity problems are detected, appropriate messages are displayed with either links or guidelines as to how to resolve the issue.

You can also view some advanced status information, including:

- a list of all current and recent (shown in red) provisioning sessions (VCS Control only)
- a list of the automatically-generated SSH tunnels servicing requests through the traversal zone

Presence

Presence publishers

The **Publishers** page (**Status > Applications > Presence > Publishers**) lists each presentity whose presence information is being managed by (that is, published to) the local Presence Server.

All presentities are listed here regardless of whether or not anyone is requesting their presence information. If there are no publishers listed, this could mean that the presence server is not enabled on this VCS.

Note: FindMe users are not listed here as they do not have their status individually published. The status of a FindMe user is based on the published status of the endpoints and/or presentities that make up the FindMe user, and is determined by the presentity manager.

URI

The address of the presentity whose presence information is being published.

Publisher count

The number of sources of information that are being published for this particular presentity. All endpoints that are registered to the VCS have information published on their behalf by the PUA (as long as they are registered with an alias in the form of a URI). If an endpoint supports presence, it may also publish its own presence information. This means that some presentities have more than one source of information about their presence. It is the job of the presentity manager to aggregate this information and determine the actual status of the presentity.

Presence presentities

The **Presentities** page (**Status > Applications > Presence > Presentities**) lists each presentity whose presence information is being managed by (that is, published to) the local Presence Server and whose presence information has been requested by a subscriber. Presentities are listed here whether or not there is any information currently available about that presentity. If a presentity has been subscribed to but there is no information being published about it, then it will be listed here if the local presence server is authoritative for the presentity's domain.

Presentities are listed here regardless of whether the subscriber that requested the information is registered locally or to a remote system.

Note: FindMe users are listed here if their presence information has been requested by a subscriber.

URI

The address of the presentity whose presence information has been requested.

Subscriber count

The number of endpoints who have requested information about that particular presentity.

To view the list of all subscribers who are requesting information about a particular presentity, click on the presentity's URI.

Presence subscribers

The **Subscribers** page (**Status > Applications > Presence > Subscribers**) lists each endpoint that has requested information about one or more presentities whose information is managed by (that is, published to) the local Presence Server.

Endpoints requesting this information are listed here regardless of whether they are registered locally or to a remote server.

Note that FindMe users are not listed here as a FindMe entity cannot subscribe to presence information. However, one or more of the endpoints that make up a FindMe user may be requesting presence information, in which case that endpoint will be listed here.

URI

The address of the endpoint that has requested presence information.

Subscription count

The number of local presentities about whom this endpoint is requesting information.

To view the list of all local presentities whose information is being requested by a particular endpoint, click on the endpoint's URI.

Lync B2BUA

Lync user status

The **Lync user status** page (**Status > Applications > Lync users**) lists and shows the current status of all the FindMe IDs being handled by the Microsoft Lync B2BUA.

It applies to deployments that use both Lync clients and FindMe, if they both use the same SIP domain. To enable this feature, **Register FindMe users as clients on Lync** must be set to *Yes* on the Microsoft Lync B2BUA configuration page.

The following information is displayed:

Field	Description
URI	The FindMe ID being handled by the B2BUA Presence Relay application.
Presence state	Shows the presence information currently being published for the FindMe ID.
Registration state	Indicates whether the FindMe ID has registered successfully with Lync. Doing so allows Lync to forward calls to the FindMe ID. Note that Lync only allows FindMe users to register if the FindMe ID being registered is a valid user in the Lync Active Directory (in the same way that Lync users can only register if they have a valid account enabled in the Lync AD).
Subscription state	Indicates whether the B2BUA Presence Relay application has subscribed successfully to the FindMe ID's presence information. Doing so allows Lync clients to view the presence information of FindMe users.
Peer	The cluster peer that is registering the URI.

You can view further status information for each FindMe ID by clicking **Edit** in the **Action** column. This can help diagnose registration or subscription failures.

Lync B2BUA status

The **Lync B2BUA status** page (**Status > Applications > Lync B2BUA**) displays the status of the Microsoft Lync B2BUA service.

The Microsoft Lync back-to-back user agent (B2BUA) on the VCS is used to route SIP calls between the VCS and a Microsoft Lync Server.

The information shown includes:

- the number of current calls passing through the Lync B2BUA
- resource usage as a percentage of the number of allowed Lync B2BUA calls

TMS Provisioning Extension service status

The **TMS Provisioning Extension service status** page (**Status > Applications > TMS Provisioning Extension services > TMS Provisioning Extension service status**) shows the status of each of the Cisco TMSPE services to which the VCS is connected (or to which it is attempting to connect).

Summary details of each service are shown including:

- the current status of the connection
- when the most recent update of new data occurred
- when the service was last polled for updates
- the scheduled time of the next poll

Click **View** to display further details about a service, including:

- additional connection status and configuration information, including troubleshooting information about any connection failures
- which VCS in the cluster has the actual connection to the Cisco TMSPE services (only displayed if the VCS is part of a cluster)
- details of each of the data tables provided by the service, including the revision number of the most recent update, and the ability to **View** the records in those tables

You are recommended to use Cisco TMS to make any changes to the services' configuration settings, however you can modify the current configuration for this VCS from the **TMS Provisioning Extension services** page (**System > TMS Provisioning Extension services**).

See the Provisioning Server section for more information.

Provisioning Server device requests status (Cisco TMSPE)

The **Device requests status** page (**Status > Applications > TMS Provisioning Extension services > Device requests**) shows the status of the VCS Provisioning Server when using Cisco TMSPE.

The VCS Provisioning Server provides provisioning-related services to provisioned devices, using data supplied by Cisco TMS through the Cisco TMS provisioning mechanism. The server only operates if the **Device Provisioning** option key is installed.

As from version X8.1, the VCS supports only the Cisco TelePresence Management Suite Provisioning Extension (Cisco TMSPE) services to provide the VCS with provisioning and FindMe data. In this mode all provisioning and FindMe data is managed and maintained exclusively within Cisco TMS.

Provisioning server

This section displays the server's status and summarizes the subscription requests received by the server since the VCS was last restarted. It shows counts of:

- the total number of subscription requests received
- how many requests were sent a successful provisioning response
- failed requests because the account requesting provisioning could not be found
- failed requests because the account requesting provisioning had no provisioned devices associated with it

Model licenses

This section shows the status of the provisioning licenses that are available within your system. Information displayed includes:

- the total license limit and the number of licenses still available (free) for use
- the number of licenses currently being used by devices that are registered to this VCS (or VCS cluster); this information is broken down by the device types that can be provisioned by this VCS

License information is exchanged between Cisco TMS and VCS by the Cisco TMSPE Devices service. If the Devices service is not active, the VCS's Provisioning Server will not be able to provision any devices.

The license limit and the number of free licenses indicate the overall number of licenses that are available to all of the VCSs or VCS clusters that are being managed by Cisco TMS, hence the difference between the license limit and free counts may not equal the sum of the number of used licenses shown for this particular VCS or VCS cluster

Phone book server

The phone book server provides phone book directory and lookup facilities to provisioned users.

This section displays the server's status and summarizes the number of phone book search requests received by the server from provisioned users since the VCS was last restarted.

User records provided by Cisco TMSPE services

You can view the data records provided by the Cisco TMSPE **Users** service by going to **Status > Applications > TMS Provisioning Extension services > Users > ...** and then the relevant table:

- **Accounts**
- **Groups**
- **Templates**

All the records in the chosen table are listed. Note that some tables can contain several thousand records and you may experience a delay before the data is displayed.

Filtering the view

The **Filter** section lets you filter the set of records that are shown. It is displayed only if there is more than one page of information to display. Status pages show 200 records per page.

Enter a text string or select a value with which to filter each relevant field, and then click **Filter**.

Only those records that match all of the selected filter options are shown. Note that text string filtering is case insensitive.

Viewing more details and related records

You can click **View** to display further details about the selected record. Many views also allow you to click on related information to see the data records associated with that item. For example, when viewing user groups, you can also access the related user templates. When viewing user accounts you can check the data that would be provisioned to that user by clicking Check provisioned data.

FindMe records provided by Cisco TMSPE services

You can view the data records provided by the Cisco TMSPE **FindMe** service by going to **Status > Applications > TMS Provisioning Extension services > FindMe > ...** and then the relevant table:

- **Accounts**
- **Locations**
- **Devices**

All the records in the chosen table are listed. Note that some tables can contain several thousand records and you may experience a delay before the data is displayed.

Filtering the view

The **Filter** section lets you filter the set of records that are shown. It is displayed only if there is more than one page of information to display. Status pages show 200 records per page.

Enter a text string or select a value with which to filter each relevant field, and then click **Filter**.

Only those records that match all of the selected filter options are shown. Note that text string filtering is case insensitive.

Viewing more details and related records

You can click **View** to display further details about the selected record. Many views also allow you to click on related information to see the data records associated with that item. For example, when viewing a FindMe user, you can also access the related location and device records.

Phone book records provided by Cisco TMSPE services

You can view the data records provided by the Cisco TMSPE **Phone books** service by going to **Status > Applications > TMS Provisioning Extension services > Phone book > ...** and then the relevant table:

- **Folders**
- **Entries**
- **Contact methods**
- **User access**

All the records in the chosen table are listed. Note that some tables can contain several thousand records and you may experience a delay before the data is displayed.

Filtering the view

The **Filter** section lets you filter the set of records that are shown. It is displayed only if there is more than one page of information to display. Status pages show 200 records per page.

Enter a text string or select a value with which to filter each relevant field, and then click **Filter**.

Only those records that match all of the selected filter options are shown. Note that text string filtering is case insensitive.

Viewing more details and related records

You can click **View** to display further details about the selected record. Many views also allow you to click on related information to see the data records associated with that item. For example, when viewing a phone

book entry, you can also access the related contact method or folder.

Provisioned devices

The **Provisioned device status** page (**Status > Applications > TMS Provisioning Extension services > Provisioned device status**) displays a list of all of the devices that have submitted provisioning requests to the VCS's Provisioning Server.

Filtering the view

The **Filter** section lets you filter the set of records that are shown. It is displayed only if there is more than one page of information to display. Status pages show 200 records per page.

Enter a text string or select a value with which to filter each relevant field, and then click **Filter**.

Only those records that match all of the selected filter options are shown. Note that text string filtering is case insensitive.

The list shows all current and historically provisioned devices. A device appears in the list after it has made its first provisioning request. The **Active** column indicates if the device is currently being provisioned (and is thus consuming a provisioning license).

Checking provisioned data

The **Check provisioned data** page is used to check the configuration data that the VCS's Provisioning Server will provision to a specific user and device combination.

You can get to this page only through the **User accounts** status page (**Status > Applications > TMS Provisioning Extension services > Users > Accounts**, locate the user you want to check and then click **Check provisioned data**).

To check provisioned data:

1. Verify that the **User account name** is displaying the name of the user account you want to check.
2. Select the **Model** and **Version** of the user's endpoint device.
   If the actual **Version** used by the endpoint is not listed, select the nearest earlier version.
3. Click **Check provisioned data**.

The **Results** section will show the data that would be provisioned out to that user and device combination.

Starter Pack Provisioning Server status

The **Starter Pack status** page (**Status > Applications > Starter Pack > Starter Pack status**) shows the status of the VCS's Provisioning Server when running as a Starter Pack.

The Starter Pack Provisioning Server provides basic provisioning-related services to provisioned devices, without the need for Cisco TMS.

Provisioning server

This section displays the server's status and summarizes the subscription requests received by the server since the VCS was last restarted. It shows counts of:

- the total number of subscription requests received
- how many requests were sent a successful provisioning response
- failed requests because the account requesting provisioning could not be found
- failed requests because the account requesting provisioning had no provisioned devices associated with it

Model licenses

This section shows the number of licenses currently being used by devices that are registered to this VCS. This information is broken down by the device types that can be provisioned by this VCS.

Phone book server

The phone book server provides phone book directory and lookup facilities to provisioned users.

This section displays the server's status and summarizes the number of phone book search requests received by the server from provisioned users since the VCS was last restarted.

Managing alarms

Alarms occur when an event or configuration change has taken place on the VCS that requires some manual administrator intervention, such as a restart. Alarms may also be raised for hardware and environmental issues such as faulty disks and fans or high temperatures.

The **Alarms** page (**Status > Alarms**) provides a list of all the alarms currently in place on your system (and, where applicable, their proposed resolution). When there are unacknowledged alarms in place on the VCS, an alarm icon appears at the top right of all pages. You can also access the **Alarms** page by clicking on the alarm icon.

Each alarm is identified by a 5-digit **Alarm ID**, shown in the rightmost column in the alarms list. The first 2 digits of the **Alarm ID** categorize the alarm as follows:

Alarm ID prefix	Category
10nnn	Hardware issues
15nnn	Software issues
20nnn	Cluster-related issues
25nnn	Network and network services settings
30nnn	Licensing / resources / option keys
35nnn	External applications and services (such as policy services or LDAP/AD configuration)
40nnn	Security issues (such as certificates, passwords or insecure configuration)
45nnn	General VCS configuration issues
55nnn	B2BUA issues

All alarms raised on the VCS are also raised as Cisco TMS tickets. All the attributes of an alarm (its ID, severity and so on) are included in the information sent to Cisco TMS.

Alarms are dealt with by clicking each **Action** hyperlink and making the necessary configuration changes to resolve the problem.

Acknowledging an alarm (by selecting an alarm and clicking on the **Acknowledge** button) removes the alarm icon from the web UI, but the alarm will still be listed on the **Alarms** page with a status of *Acknowledged*. If a new alarm occurs, the alarm icon will reappear.

- You cannot delete alarms from the **Alarms** page. Alarms are removed by the VCS only after the required action or configuration change has been made.
- After a restart of the VCS, any *Acknowledged* alarms that are still in place on the VCS will reappear with a status of *New*, and must be re-acknowledged.
- The display indicates when the alarm was first and last raised since the VCS was last restarted.
- If your VCS is a part of a cluster, the **Alarms** page shows all of the alarms raised by any of the cluster peers. However, you can acknowledge only those alarms that have been raised by the "current" peer (the peer to which you are currently logged in to as an administrator).
- You can click the Alarm ID to generate a filtered view of the Event Log, showing all occurrences of when that alarm has been raised and lowered.

See the alarms list for further information about the specific alarms that can be raised.

Logs

Event Log

The **Event Log** page (**Status > Logs > Event Log**) lets you view and search the Event Log, which is a list of the events that have occurred on your system since the last upgrade.

The Event Log holds a maximum of 2GB of data; when this size is reached, the oldest entries are overwritten. However, only the first 50MB of Event Log data can be displayed through the web interface.

Filtering the Event Log

The **Filter** section lets you filter the Event Log. It is displayed only if there is more than one page of information to display. Log pages show 1000 records per page.

Enter the words you want to search for and click **Filter**. Only those events that contain all the words you entered are shown.

To do more advanced filtering, click **more options**. This gives you additional filtering methods:

- **Contains the string**: only includes events containing the exact phrase entered here.
- **Contains any of the words**: includes any events that contain at least one of the words entered here.
- **Not containing any of the words**: filters out any events containing any of the words entered here.

Note: use spaces to separate each word you want to filter by.

Click **Filter** to reapply any modified filter conditions. To return to the complete log listing, click **Reset**.

Reconfiguring the log settings

Clicking **Configure the log settings** takes you to the Logging configuration page. From this page, you can set the level of events that are recorded in the Event Log, and also set up a remote server to which the Event Log can be copied.

Saving the results to a local disk

Click **Download this page** if you want to download the contents of the results section to a text file on your local PC or server.

Results section

The **Results** section shows all the events matching the current filter conditions, with the most recent being shown first.

Most **tvcs** events contain hyperlinks in one or more of the fields (such fields change color when you hover over them). You can click on the hyperlink to show only those events that contain the same text string. For example, clicking on the text that appears after **Event=** filters the list to show all the events of that particular type. Likewise, clicking on a particular **Call-Id** shows just those events that contain a reference to that particular call.

Event Log color coding

Certain events in the Event Log are color-coded so that you can identify them more easily. These events are as follows:

Green events:

- System Start
- Admin Session Start/Finish
- Installation of <item> succeeded
- Registration Accepted
- Call Connected
- Request Successful
- Beginning System Restore
- Completed System Restore

Orange events:

- System Shutdown
- Intrusion Protection Unblocking

Purple events:

- Diagnostic Logging

Red events:

- Registration Rejected
- Registration Refresh Rejected
- Call Rejected
- Security Alert
- License Limit Reached
- Decode Error
- TLS Negotiation Error
- External Server Communications Failure
- Application Failed
- Request Failed
- System Backup Error
- System Restore Error
- Authorization Failure
- Intrusion Protection Blocking

For more information about the format and content of the Event Log see Event Log format [p.382] and Events and levels [p.385].

Configuration Log

The **Configuration Log** page (**Status > Logs > Configuration Log**) provides a list of all changes to the VCS configuration.

The Configuration Log holds a maximum of 30MB of data; when this size is reached, the oldest entries are overwritten. The entire Configuration Log can be displayed through the web interface.

Filtering the Configuration Log

The **Filter** section lets you filter the Configuration Log. It is displayed only if there is more than one page of information to display. Log pages show 1000 records per page.

Enter the words you want to search for and click **Filter**. Only those events that contain all the words you entered are shown.

To do more advanced filtering, click **more options**. This gives you additional filtering methods:

- **Contains the string**: only includes events containing the exact phrase entered here.
- **Contains any of the words**: includes any events that contain at least one of the words entered here.
- **Not containing any of the words**: filters out any events containing any of the words entered here.

Note: use spaces to separate each word you want to filter by.

Click **Filter** to reapply any modified filter conditions. To return to the complete log listing, click **Reset**.

Results section

The **Results** section shows all the web-based events, with the most recent being shown first.

Most events contain hyperlinks in one or more of the fields (such fields change color when you hover over them). You can click on the hyperlink to show only those events that contain the same text string. For example, clicking on the text that appears after **Event=** filters the list to show all the events of that particular type. Likewise, clicking on a particular **user** shows just those events relating to that particular administrator account.

All events that appear in the Configuration Log are recorded as Level 1 Events, so any changes to the logging levels will not affect their presence in the Configuration Log.

Configuration Log events

Changes to the VCS configuration made by administrators using the web interface have an Event field of *System Configuration Changed*.

The **Detail** field of each of these events shows:

- the configuration item that was affected
- what it was changed from and to
- the name of the administrator user who made the change, and their IP address
- the date and time that the change was made

Network Log

The **Network Log** page (**Status > Logs > Network Log**) provides a list of the call signaling messages that have been logged on this VCS.

The Network Log holds a maximum of 2GB of data; when this size is reached, the oldest entries are overwritten. However, only the first 50MB of Network Log data can be displayed through the web interface.

Filtering the Network Log

The **Filter** section lets you filter the Network Log. It is displayed only if there is more than one page of information to display. Log pages show 1000 records per page.

Enter the words you want to search for and click **Filter**. Only those events that contain all the words you entered are shown.

To do more advanced filtering, click **more options**. This gives you additional filtering methods:

- **Contains the string**: only includes events containing the exact phrase entered here.
- **Contains any of the words**: includes any events that contain at least one of the words entered here.
- **Not containing any of the words**: filters out any events containing any of the words entered here.

Note: use spaces to separate each word you want to filter by.

Click **Filter** to reapply any modified filter conditions. To return to the complete log listing, click **Reset**.

Reconfiguring the log settings

Clicking **Configure the log settings** takes you to the Network Log configuration page. From this page, you can set the level of events that are recorded in the Network Log.

Saving the results to a local disk

Click **Download this page** if you want to download the contents of the results section to a text file on your local PC or server.

Results section

The **Results** section shows the events logged by each of the Network Log modules.

Most events contain hyperlinks in one or more of the fields (such fields change color when you hover over them). You can click on the hyperlink to show only those events that contain the same text string. For example, clicking on the text that appears after **Module=** filters the list to show all the events of that particular type.

The events that appear in the Network Log are dependent on the log levels configured on the Network Log configuration page.

Hardware status

The **Hardware** page (**Status > Hardware**) provides information about the physical status of your VCS appliance.

Information displayed includes:

- fan speeds
- component temperatures
- component voltages

Any appropriate minimum or maximum levels are shown to help identify any components operating outside of their standard limits.

WARNING: do not attempt to service the apparatus yourself as opening or removing covers may expose you to dangerous voltages or other hazards, and will void the warranty. Refer all servicing to qualified service personnel.

Note that hardware status information is not displayed if the VCS is running on VMware.

Reference material

This section provides supplementary information about the features and administration of the VCS.

Performance capabilities 381
About Event Log levels 382
CPL reference 391
LDAP server configuration for device authentication 402
DNS configuration examples 408
Changing the default SSH key 410
Restoring default configuration (factory reset) 411
Password encryption 413
Pattern matching variables 414
Port reference 416
Mobile and remote access port reference 422
Microsoft Lync B2BUA port reference 424
Device authentication port reference 426
Regular expressions 427
Supported characters 429
Call types and licensing 430
Alarms 432
Command reference — xConfiguration 449
Command reference — xCommand 496
Command reference — xStatus 515
External policy overview 517
Flash status word reference table 520
Supported RFCs 521
Software version history 523
Related documentation 538
Legal notices 540

Performance capabilities

The performance capabilities of VCS X8.2 software are summarized below. In all cases, note that:

- You can cluster up to 6 VCSs to increase capacity by a maximum factor of 4.
- Logging is at default levels.
- Performance capacity will be reduced by features such as presence, provisioning, TURN relay services, and by configuring large numbers of zones and search rules.
- VM hardware requires a minimum of 6GB RAM.
- The VCS supports up to 500 concurrent searches.

CE1000 appliances or Large VM servers (minimum 8 cores with 2 x 10Gb NIC)

Supports the following set of concurrent calls and registrations:

- 500 encrypted traversal calls @ 768kbps or 1000 encrypted SIP audio traversal calls @ 64kbps; and
- 500 non-traversal calls; and
- 5000 registrations

This assumes a maximum sustained call rate of 10 calls per second.

CE500 or legacy appliances, or Small/Medium VM servers (2 cores and 1Gb NIC)

Supports the following set of concurrent calls and registrations:

- 100 encrypted traversal calls @ 768kbps; and
- 500 non-traversal calls; and
- 2500 registrations

This assumes a maximum sustained call rate of 5 calls per second.

About Event Log levels

All events have an associated level in the range 1-4, with Level 1 Events considered the most important. The table below gives an overview of the levels assigned to different events.

Level	Assigned events
1	High-level events such as registration requests and call attempts. Easily human readable. For example: ■ call attempt/connected/disconnected ■ registration attempt/accepted/rejected
2	All Level 1 events, plus: ■ logs of protocol messages sent and received (SIP, H.323, LDAP and so on) excluding noisy messages such as H.460.18 keepalives and H.245 video fast-updates
3	All Level 1 and Level 2 events, plus: ■ protocol keepalives ■ call-related SIP signaling messages
4	The most verbose level: all Level 1, Level 2 and Level 3 events, plus: ■ network level SIP messages

See the Events and levels section for a complete list of all events that are logged by the VCS, and the level at which they are logged.

Event Log format

The Event Log is displayed in an extension of the UNIX syslog format:

```
date time process_name: message_details
```

where:

Field	Description
date	The local date on which the message was logged.
time	The local time at which the message was logged.
process_name	The name of the program generating the log message. This could include: ■ **tvcs** for all messages originating from VCS processes ■ **web** for all web login and configuration events ■ **licensemanager** for messages originating from the call license manager ■ **provisioning** for provisioning server events ■ **b2bua** for B2BUA events ■ **presencerelay** for B2BUA Presence Relay application events ■ **portforwarding** for internal communications between the VCS Control and the VCS Expressway ■ **ssh** for ssh tunnels between the VCS Control and the VCS Expressway but will differ for messages from other applications running on the VCS.
message_details	The body of the message (see the Message details field section for further information).

Administrator and FindMe user events

Administrator session related events are:

- Admin Session Start
- Admin Session Finish
- Admin Session Login Failure

FindMe user session related events are:

- User Session Start
- User Session Finish
- User Session Login Failure

For both administrator and FindMe user related events, the Detail field includes:

- the name of the administrator or FindMe user to whom the session relates, and their IP address
- the date and time that the login was attempted, started, or ended

Message details field

For all messages logged from the **`tvcs`** process, the **`message_details`** field, which contains the body of the message, consists of a number of human-readable **`name=value`** pairs, separated by a space.

The first name element within the **`message_details`** field is always **`Event`** and the last name element is always **`Level`**.

The table below shows all the possible name elements within the **`message_details`** field, in the order that they would normally appear, along with a description of each.

Note: in addition to the events described below, a **`syslog.info`** event containing the string **`MARK`** is logged after each hour of inactivity to provide confirmation that logging is still active.

Name	Description
Event	The event which caused the log message to be generated. See Events and levels for a list of all events that are logged by the VCS, and the level at which they are logged.
User	The username that was entered when a login attempt was made.
ipaddr	The source IP address of the user who has logged in.
Protocol	Specifies which protocol was used for the communication. Valid values are: ■ TCP ■ UDP ■ TLS
Reason	Textual string containing any reason information associated with the event.

Name	Description
Service	Specifies which protocol was used for the communication. Will be one of: ■ H323 ■ SIP ■ H.225 ■ H.245 ■ LDAP ■ Q.931 ■ NeighbourGatekeeper ■ Clustering ■ ConferenceFactory
Message Type	Specifies the type of the message.
Response-code	SIP response code or, for H.323 and interworked calls, a SIP equivalent response code.
Src-ip	Source IP address (the IP address of the device attempting to establish communications). This can be an IPv4 address or an IPv6 address.
Dst-ip	Destination IP address (the IP address of the destination for a communication attempt). The destination IP is recorded in the same format as Src-ip.
Src-port	Source port: the IP port of the device attempting to establish communications.
Dst-port	Destination port: the IP port of the destination for a communication attempt.
Src-alias	If present, the first H.323 alias associated with the originator of the message. If present, the first E.164 alias associated with the originator of the message.
Dst-alias	If present, the first H.323 alias associated with the recipient of the message. If present, the first E.164 alias associated with the recipient of the message.
Detail	Descriptive detail of the Event.
Auth	Whether the call attempt has been authenticated successfully.
Method	SIP method (INVITE, BYE, UPDATE, REGISTER, SUBSCRIBE, etc).
Contact	Contact: header from REGISTER.
AOR	Address of record.
Call-id	The Call-ID header field uniquely identifies a particular invitation or all registrations of a particular client.
Call-serial-number	The local Call Serial Number that is common to all protocol messages for a particular call.
Tag	The Tag is common to all searches and protocol messages across a VCS network for all forks of a call.
Call-routed	Indicates if the VCS took the signaling for the call.

Name	Description
To	■ for REGISTER requests: the AOR for the REGISTER request ■ for INVITEs: the original alias that was dialed ■ for all other SIP messages: the AOR of the destination.
Request-URI	The SIP or SIPS URI indicating the user or service to which this request is being addressed.
Num-bytes	The number of bytes sent/received in the message.
Protocol-buffer	Shows the data contained in the buffer when a message could not be decoded.
Duration	Request/granted registration expiry duration.
Time	A full UTC timestamp in YYYY/MM/DD-HH:MM:SS format. Using this format permits simple ASCII text sorting/ordering to naturally sort by time. This is included due to the limitations of standard syslog timestamps.
Level	The level of the event as defined in the About Event Log levels section.
UTCTime	Time the event occurred, shown in UTC format.

Events and levels

The following table lists the events that can appear in the Event Log.

Event	Description	Level
Alarm acknowledged	An administrator has acknowledged an alarm. The **Detail** event parameter provides information about the nature of the issue.	1
Alarm lowered	The issue that caused an alarm to be raised has been resolved. The **Detail** event parameter provides information about the nature of the issue.	1
Alarm raised	The VCS has detected an issue and raised an alarm. The **Detail** event parameter provides information about the nature of the issue.	1
Admin Session CBA Authorization Failure	An unsuccessful attempt has been made to log in when the VCS is configured to use certificate-based authentication.	1
Admin Session Finish	An administrator has logged off the system.	1
Admin Session Login Failure	An unsuccessful attempt has been made to log in as an administrator. This could be because an incorrect username or password (or both) was entered.	1
Admin Session Start	An administrator has logged onto the system.	1
Application Exit	The VCS application has been exited. Further information may be provided in the **Detail** event parameter.	1
Application Failed	The VCS application is out of service due to an unexpected failure.	1
Application Start	The VCS has started. Further detail may be provided in the **Detail** event parameter.	1

Event	Description	Level
Application Warning	The VCS application is still running but has experienced a recoverable problem. Further detail may be provided in the **Detail** event parameter.	1
Authorization Failure	The user has either entered invalid credentials, does not belong to an access group, or belongs to a group that has an access level of "None". Applies when remote authentication is enabled.	1
Beginning System Backup	A system backup has started.	1
Beginning System Restore	A system restore has started.	1
Call Answer Attempted	An attempt to answer a call has been made.	1
Call Attempted	A call has been attempted.	1
Call Bandwidth Changed	The endpoints in a call have renegotiated call bandwidth.	1
Call Connected	A call has been connected.	1
Call Diverted	A call has been diverted.	1
Call Disconnected	A call has been disconnected.	1
Call Inactivity Timer	A call has been disconnected due to inactivity.	1
Call Rejected	A call has been rejected. The **Reason** event parameter contains a textual representation of the H.225 additional cause code.	1
Call Rerouted	The VCS has **Call signaling optimization** set to *On* and has removed itself from the call signaling path.	1
CBA Authorization Failure	An attempt to log in using certificate-based authentication has been rejected due to authorization failure.	1
Certificate Management	Indicates that security certificates have been uploaded. See the **Detail** event parameter for more information.	1
Completed System Backup	A system backup has completed.	1
Completed System restore	A system restore has completed.	1
Configlog Cleared	An operator cleared the Configuration Log.	1
Decode Error	A syntax error was encountered when decoding a SIP or H.323 message.	1
Diagnostic Logging	Indicates that diagnostic logging is in progress. The **Detail** event parameter provides additional details.	1
Error Response Sent	The TURN server has sent an error message to a client (using STUN protocol).	3
Eventlog Cleared	An operator cleared the Event Log.	1

Event	Description	Level
External Server Communication Failure	Communication with an external server failed unexpectedly. The **Detail** event parameter should differentiate between "no response" and "request rejected". Servers concerned are: ■ DNS ■ LDAP servers ■ Neighbor Gatekeeper ■ NTP servers ■ Peers	1
FindMe Search Failed	A search of the FindMe database has failed, for example due to no alias being provided.	1
Hardware Failure	There is an issue with the VCS hardware. If the problem persists, contact your Cisco support representative.	1
License Limit Reached	Licensing limits for a given feature have been reached. The **Detail** event parameter specifies the facility/limits concerned. Possible values for the detail field are: ■ Non Traversal Call Limit Reached ■ Traversal Call Limit Reached If this occurs frequently, you may want to contact your Cisco representative to purchase more licenses.	1
Message Received	An incoming RAS message has been received.	2
Message Received	An incoming RAS NSM Keepalive, H.225, H.245 or a RAS message between peers has been received.	3
Message Received	(SIP) An incoming message has been received.	4
Message Rejected	This could be for one of two reasons: ■ If authentication is enabled and an endpoint has unsuccessfully attempted to send a message (such as a registration request) to the VCS. This could be either because the endpoint has not supplied any authentication credentials, or because its credentials do not match those expected by the VCS. ■ Clustering is enabled but bandwidth across the cluster has not been configured identically, and the VCS has received a message relating to an unknown peer, link, pipe, subzone or zone.	1
Message Sent	An outgoing RAS message has been sent.	2
Message Sent	An outgoing RAS NSM Keepalive, H.225, H.245 or a RAS message between peers has been sent.	3
Message Sent	(SIP) An outgoing message has been sent.	4
Operator Call Disconnect	An administrator has disconnected a call.	1
Outbound TLS Negotiation Error	The VCS is unable to communicate with another system over TLS. The event parameters provide more information.	1
Package Install	A package, for example a language pack, has been installed or removed.	2

Event	Description	Level
Policy Change	A policy file has been updated.	1
POST request failed	A HTTP POST request was submitted from an unauthorized session.	1
Provisioning	Diagnostic messages from the provisioning server. The **Detail** event parameter provides additional information.	1
Reboot Requested	A system reboot has been requested. The **Reason** event parameter provides specific information.	1
Registration Accepted	A registration request has been accepted.	1
Registration Refresh Accepted	A request to refresh or keep a registration alive has been accepted.	3
Registration Refresh Rejected	A request to refresh a registration has been rejected.	1
Registration Refresh Requested	A request to refresh or keep a registration alive has been received.	3
Registration Rejected	A registration request has been rejected. The **Reason** and **Detail** event parameters provide more information about the nature of the rejection.	1
Registration Removed	A registration has been removed by the VCS. The **Reason** event parameter specifies the reason why the registration was removed. This is one of: ■ Authentication change ■ Conflicting zones ■ Operator forced removal ■ Operator forced removal (all registrations removed) ■ Registration superseded.	1
Registration Requested	A registration has been requested.	1
Relay Allocated	A TURN server relay has been allocated.	2
Relay Deleted	A TURN server relay has been deleted.	2
Relay Expired	A TURN server relay has expired.	2
Request Failed	A request sent to the Conference Factory has failed.	1
Request Received	A call-related SIP request has been received.	2
Request Received	A non-call-related SIP request has been received.	3
Request Sent	A call-related SIP request has been sent.	2
Request Sent	A non-call-related SIP request has been sent.	3
Request Successful	A successful request was sent to the Conference Factory.	1

Event	Description	Level
Response Received	A call-related SIP response has been received.	2
Response Received	A non-call-related SIP response has been received.	3
Response Sent	A call-related SIP response has been sent.	2
Response Sent	A non-call-related SIP response has been sent.	3
Restart Requested	A system restart has been requested. The **Reason** event parameter provides specific information.	1
Search Attempted	A search has been attempted.	1
Search Cancelled	A search has been cancelled.	1
Search Completed	A search has been completed.	1
Search Loop detected	The VCS is in **Call loop detection** mode and has identified and terminated a looped branch of a search.	2
Secure mode disabled	The VCS has successfully exited **Advanced account security** mode.	1
Secure mode enabled	The VCS has successfully entered **Advanced account security** mode.	1
Security Alert	A potential security-related attack on the VCS has been detected.	1
Source Aliases Rewritten	A source alias has been changed to indicate the caller's FindMe ID.	1
Success Response Sent	The TURN server has sent a success message to a client (using STUN protocol).	3
System backup completed	The system backup process has completed.	1
System Backup error	An error occurred while attempting a system backup.	1
System backup started	The system backup process has started.	1
System Configuration Changed	An item of configuration on the system has changed. The **Detail** event parameter contains the name of the changed configuration item and its new value.	1
System restore completed	The system restore process has completed.	1
System restore backing up current config	System restore process has started backing up the current configuration	1

Event	Description	Level
System restore backup of current config completed	System restore process has completed backing up the current configuration	1
System restore error	An error occurred while attempting a system restore.	1
System restore started	The system restore process has started.	1
System Shutdown	The operating system was shutdown.	1
System snapshot started	A system snapshot has been initiated.	1
System snapshot completed	A system snapshot has completed.	1
System Start	The operating system has started. The **Detail** event parameter may contain additional information if there are startup problems.	1
TLS Negotiation Error	Transport Layer Security (TLS) connection failed to negotiate.	1
Unregistration Accepted	An unregistration request has been accepted.	1
Unregistration Rejected	An unregistration request has been rejected.	1
Unregistration Requested	An unregistration request has been received.	1
Upgrade	Messages related to the software upgrade process. The **Detail** event parameter provides specific information.	1
User session finish	A FindMe user has logged out of the system.	1
User session Login failure	An unsuccessful attempt has been made to log in as a FindMe user. This could be because either an incorrect username or password (or both) was entered.	1
User session start	A FindMe user has logged on to the system.	1

CPL reference

Call Processing Language (CPL) is an XML-based language for defining call handling. This section gives details of the VCS's implementation of the CPL language and should be read in conjunction with the CPL standard *RFC 3880*.

The VCS has many powerful inbuilt transform features so CPL should be required only if advanced call handling rules are required.

The VCS supports most of the CPL standard along with some TANDBERG-defined extensions. It does not support the top level actions **<incoming>** and **<outgoing>** as described in *RFC 3880*. Instead it supports a single section of CPL within a **<taa:routed>** section.

When Call Policy is implemented by uploading a CPL script to the VCS, the script is checked against an XML schema to verify the syntax. There are two schemas - one for the basic CPL specification and one for the TANDBERG extensions. Both of these schemas can be downloaded from the web interface and used to validate your script before uploading to the VCS.

The following example shows the correct use of namespaces to make the syntax acceptable:

```
<?xml version="1.0" encoding="UTF-8" ?>
<cpl xmlns="urn:ietf:params:xml:ns:cpl"
  xmlns:taa="http://www.tandberg.net/cpl-extensions"
  xmlns:xsi="http://www.w3.org/2001/XMLSchema-instance"
  xsi:schemaLocation="urn:ietf:params:xml:ns:cpl cpl.xsd">
  <taa:routed>
    <address-switch field="destination">
      <address is="reception@example.com">
        <proxy/>
      </address>
    </address-switch>
  </taa:routed>
</cpl>
```

Source and destination address formats

When the descriptions in this section refer to the source or destination aliases of a call, this means all supported address formats (URIs, IP addresses, E.164 aliases and so on).

CPL address-switch node

The **address-switch** node allows the script to run different actions based on the source or destination aliases of the call. It specifies which fields to match, and then a list of address nodes contains the possible matches and their associated actions.

The address-switch has two node parameters: **field** and **subfield**.

address

The **address** construct is used within an **address-switch** to specify addresses to match. It supports the use of regular expressions.

Valid values are:

is=string	Selected field and subfield exactly match the given string.
contains=string	Selected field and subfield contain the given string. Note that the CPL standard only allows for this matching on the display subfield; however the VCS allows it on any type of field.
subdomain-of=string	If the selected field is numeric (for example, the tel subfield) then this matches as a prefix; so **address subdomain-of="555"** matches **5556734** and so on. If the field is not numeric then normal domain name matching is applied; so **address subdomain-of="company.com"** matches **nodeA.company.com** and so on.
regex="regular expression"	Selected field and subfield match the given regular expression.

All address comparisons ignore upper/lower case differences so **address is="Fred"** will also match **fred**, **freD** and so on.

field

Within the **address-switch** node, the mandatory **field** parameter specifies which address is to be considered. The supported attributes and their interpretation are shown below:

Field parameter attributes	SIP	H.323
unauthenticated-origin	The "From" and "ReplyTo" fields of the incoming message.	The source aliases from the original LRQ or ARQ that started the call. If a SETUP is received without a preceding RAS message then the origin is taken from the SETUP.
authenticated-origin and **origin**	The "From" and "ReplyTo" fields of the message if it authenticated correctly (or where the relevant **Authentication Policy** is *Treat as authenticated*), otherwise **not-present**.	The source aliases from the original LRQ or ARQ that started the call if it authenticated correctly (or where the relevant **Authentication Policy** is *Treat as authenticated*) otherwise **not-present**. Because SETUP messages are not authenticated, if the VCS receives a SETUP without a preceding RAS message the origin will always be **not-present**.
originating-zone	The name of the zone or subzone for the originating leg of the call. If the call originates from a neighbor, traversal server or traversal client zone then this will equate to the zone name. If it comes from an endpoint within one of the local subzones this will be the name of the subzone. If the call originates from any other locally registered endpoint this will be "DefaultSubZone". In all other cases this will be "DefaultZone".	
originating-user	If the relevant **Authentication Policy** is *Check credentials* or *Treat as authenticated* this is the username used for authentication, otherwise **not-present**.	
registered-origin	If the call originates from a registered endpoint this is the list of all aliases it has registered, otherwise **not-present**.	
destination	The destination aliases.	
original-destination	The destination aliases.	

Note that any Authentication Policy settings that apply are those configured for the relevant zone or subzone according to the source of the incoming message.

If the selected field contains multiple aliases then the VCS will attempt to match each address node with all of the aliases before proceeding to the next address node, that is, an address node matches if it matches any alias.

subfield

Within the address-switch node, the optional subfield parameter specifies which part of the address is to be considered. The following table gives the definition of subfields for each alias type.

If a subfield is not specified for the alias type being matched then the **not-present** action is taken.

address-type	Either **h323** or **sip**, based on the type of endpoint that originated the call.
user	For URI aliases this selects the username part. For H.323 IDs it is the entire ID and for E.164 numbers it is the entire number.
host	For URI aliases this selects the domain name part. If the alias is an IP address then this subfield is the complete address in dotted decimal form.
tel	For E.164 numbers this selects the entire string of digits.
alias-type	Gives a string representation of the type of alias. The type is inferred from the format of the alias. Possible types are: ■ Address Type ■ Result ■ URI ■ url-ID ■ H.323 ID ■ h323-ID ■ Dialed Digits ■ dialedDigits

otherwise

The **otherwise** node is executed if the address specified in the **address-switch** was found but none of the preceding address nodes matched.

not-present

The **not-present** node is executed when the address specified in the **address-switch** was not present in the call setup message. This form is most useful when authentication is being used. With authentication enabled the VCS will only use authenticated aliases when running policy so the not-present action can be used to take appropriate action when a call is received from an unauthenticated user (see the example Call screening of authenticated users).

location

As the CPL script is evaluated it maintains a list of addresses (H.323 IDs, URLs and E.164 numbers) which are used as the destination of the call if a **proxy** node is executed. The **taa:location** node allows the location set to be modified so that calls can be redirected to different destinations.

At the start of script execution the location set is initialized to the original destination.

The following attributes are supported on **taa:location** nodes. It supports the use of regular expressions.

Clear = "yes" | "no"	Specifies whether to clear the current location set before adding the new location. The default is to append this location to the end of the set.
url=string	The new location to be added to the location set. The given string can specify a URL (for example, **user@domain.com**), H.323 ID or an E.164 number.
priority=<0.0..1.0> | "random"	Specified either as a floating point number in the range 0.0 to 1.0, or **random**, which assigns a random number within the same range. 1.0 is the highest priority. Locations with the same priority are searched in parallel.
regex="<regular expression>" replace="<string>"	Specifies the way in which a location matching the regular expression is to be changed.
source-url-for-message="<string>"	Replaces the From header (source alias) with the specified string. Note that this will override any User Policy that may have been applied.
source-url-for-message-regex="<regular expression>" together with **source-url-for-message-replace="<string>"**	Replaces any From header (source alias) that matches the regular expression with the specified replacement string. If there are multiple From headers (applies to H.323 only) then any From headers that do not match are left unchanged. Note that this will override any User Policy that may have been applied.

If the source URL of a From header is modified, any corresponding display name is also modified to match the username part of the modified source URL.

rule-switch

This extension to CPL is provided to simplify Call Policy scripts that need to make decisions based on both the source and destination of the call. A **taa:rule-switch** can contain any number of rules that are tested in sequence; as soon as a match is found the CPL within that rule element is executed.

Each rule must take one of the following forms:

```
<taa:rule-switch>
  <taa:rule origin="<regular expression>" destination="<regular expression>" message-rege
x="<regular expression>">
  <taa:rule authenticated-origin="<regular expression>" destination="<regular expressio
n>" message-regex="<regular expression>">
  <taa:rule unauthenticated-origin="<regular expression>" destination="<regular expressio
n>" message-regex="<regular expression>">
  <taa:rule registered-origin="<regular expression>" destination="<regular expression>" m
essage-regex="<regular expression>">
  <taa:rule originating-user="<regular expression>" destination="<regular expression>" me
ssage-regex="<regular expression>">
  <taa:rule originating-zone="<regular expression>" destination="<regular expression>" me
ssage-regex="<regular expression>">
</taa:rule-switch>
```

The meaning of the various **origin** selectors is as described in the field section.

The **message-regex** parameter allows a regular expression to be matched against the entire incoming SIP message.

Note that any rule containing a message-regex parameter will never match an H.323 call.

proxy

On executing a proxy node the VCS attempts to forward the call to the locations specified in the current location set. If multiple entries are in the location set then this results in a forked call. If the current location set is empty the call is forwarded to its original destination.

The proxy node supports the following optional parameters:

timeout=<1..86400>	Timeout duration, specified in seconds
stop-on-busy = "yes" | "no"	Whether to stop searching if a busy response is received

The proxy action can lead to the results shown in the table below.

failure	The proxy failed to route the call
busy	Destination is found but is busy
noanswer	Destination is found but does not answer
redirection	VCS is asked to redirect the call
default	CPL to run if the other results do not apply

The CPL can perform further actions based on these results. Any results nodes must be contained within the **proxy** node. For example:

```
<proxy timeout="10">
  <busy>
    <!--If busy route to recording service-->
    <location clear="yes" url="recorder">
      <proxy/>
    </location>
  </busy>
</proxy>
```

reject

If a **reject** node is executed the VCS stops any further script processing and rejects the current call.

The custom reject strings **status=string** and **reason=string** options are supported here and should be used together to ensure consistency of the strings.

Unsupported CPL elements

The VCS does not currently support some elements that are described in the CPL RFC. If an attempt is made to upload a script containing any of the following elements an error message will be generated and the VCS will continue to use its existing policy.

The following elements are not currently supported:

- time-switch
- string-switch
- language-switch

- priority-switch
- redirect
- mail
- log
- subaction
- lookup
- remove-location

CPL examples

This section provides a selection of CPL examples:

- Call screening of authenticated users
- Call screening based on alias
- Call screening based on domain
- Change of domain name
- Allow calls from locally registered endpoints only
- Block calls from Default Zone and Default Subzone
- Restricting access to a local gateway
- Redirecting failed calls based on status code
- Reject attempts to subscribe to a presentity

CPL example: call screening of authenticated users

In this example, only calls from users with authenticated source addresses are allowed. See About device authentication [p.127] for details on how to enable authentication.

```
<?xml version="1.0" encoding="UTF-8" ?>
<cpl xmlns="urn:ietf:params:xml:ns:cpl"
  xmlns:taa="http://www.tandberg.net/cpl-extensions"
  xmlns:xsi="http://www.w3.org/2001/XMLSchema-instance"
  xsi:schemaLocation="urn:ietf:params:xml:ns:cpl cpl.xsd">
  <taa:routed>
    <address-switch field="authenticated-origin">
      <not-present>
        <!-- Reject call with a status code of 403 (Forbidden) -->
        <reject status="403" reason="Denied by policy"/>
      </not-present>
    </address-switch>
  </taa:routed>
</cpl>
```

CPL example: call screening based on alias

In this example, user **ceo** will only accept calls from users **vpsales**, **vpmarketing** or **vpengineering**.

```
<?xml version="1.0" encoding="UTF-8" ?>
<cpl xmlns="urn:ietf:params:xml:ns:cpl"
  xmlns:taa="http://www.tandberg.net/cpl-extensions"
  xmlns:xsi="http://www.w3.org/2001/XMLSchema-instance"
  xsi:schemaLocation="urn:ietf:params:xml:ns:cpl cpl.xsd">
```

```
  <taa:routed>
    <address-switch field="destination">
      <address is="ceo">
        <address-switch field="authenticated-origin">
          <address regex="vpsales|vpmarketing|vpengineering">
            <!-- Allow the call -->
            <proxy/>
          </address>
          <not-present>
            <!-- Unauthenticated user -->
            <!-- Reject call with a status code of 403 (Forbidden) -->
            <reject status="403" reason="Denied by policy"/>
          </not-present>
          <otherwise>
            <!-- Reject call with a status code of 403 (Forbidden) -->
            <reject status="403" reason="Denied by policy"/>
          </otherwise>
        </address-switch>
      </address>
    </address-switch>
  </taa:routed>
</cpl>
```

CPL example: call screening based on domain

In this example, user fred will not accept calls from anyone at **annoying.com**, or from any unauthenticated users. All other users will allow any calls.

```
<?xml version="1.0" encoding="UTF-8" ?>
<cpl xmlns="urn:ietf:params:xml:ns:cpl"
  xmlns:taa="http://www.tandberg.net/cpl-extensions"
  xmlns:xsi="http://www.w3.org/2001/XMLSchema-instance"
  xsi:schemaLocation="urn:ietf:params:xml:ns:cpl cpl.xsd">
  <taa:routed>
    <address-switch field="destination">
      <address is="fred">
        <address-switch field="authenticated-origin" subfield="host">
          <address subdomain-of="annoying.com">
            <!-- Don't accept calls from this source -->
            <!-- Reject call with a status code of 403 (Forbidden) -->
            <reject status="403" reason="Denied by policy"/>
          </address>
          <not-present>
            <!-- Don't accept calls from unauthenticated sources -->
            <!-- Reject call with a status code of 403 (Forbidden) -->
            <reject status="403" reason="Denied by policy"/>
          </not-present>
          <otherwise>
            <!-- All other calls allowed -->
            <proxy/>
          </otherwise>
        </address-switch>
      </address>
    </address-switch>
  </taa:routed>
</cpl>
```

CPL example: change of domain name

In this example, **Example Inc** has changed its domain from **example.net** to **example.com**. For a period of time some users are still registered at **example.net**. The following script would attempt to connect calls to **user@example.com** first and if that fails then fallback to **example.net**.

```
<?xml version="1.0" encoding="UTF-8" ?>
<cpl xmlns="urn:ietf:params:xml:ns:cpl"
  xmlns:taa="http://www.tandberg.net/cpl-extensions"
  xmlns:xsi="http://www.w3.org/2001/XMLSchema-instance"
  xsi:schemaLocation="urn:ietf:params:xml:ns:cpl cpl.xsd">
  <taa:routed>
    <address-switch field="destination">
      <address regex="(.*)@example.com">
        <proxy>
          <failure>
            <!-- Failed to contact using example.com, retry the request with example.net
-->
            <taa:location clear="yes" regex="(.*)@example.com" replace="\1@example.net">
              <proxy/>
            </taa:location>
          </failure>
        </proxy>
      </address>
    </address-switch>
  </taa:routed>
</cpl>
```

CPL example: allow calls from locally registered endpoints only

In this example, the administrator only wants to allow calls that originate from locally registered endpoints.

```
<?xml version="1.0" encoding="UTF-8" ?>
<cpl xmlns="urn:ietf:params:xml:ns:cpl"
  xmlns:taa="http://www.tandberg.net/cpl-extensions"
  xmlns:xsi="http://www.w3.org/2001/XMLSchema-instance"
  xsi:schemaLocation="urn:ietf:params:xml:ns:cpl cpl.xsd">
  <taa:routed>
    <address-switch field="registered-origin">
      <not-present>
        <reject status="403" reason="Only local endpoints can use this VCS"/>
      </not-present>
    </address-switch>
  </taa:routed>
</cpl>
```

CPL example: block calls from Default Zone and Default Subzone

The script to allow calls from locally registered endpoints only can be extended to also allow calls from configured zones but not from the Default Zone or Default Subzone.

```
<?xml version="1.0" encoding="UTF-8" ?>
<cpl xmlns="urn:ietf:params:xml:ns:cpl"
  xmlns:taa="http://www.tandberg.net/cpl-extensions"
  xmlns:xsi="http://www.w3.org/2001/XMLSchema-instance"
  xsi:schemaLocation="urn:ietf:params:xml:ns:cpl cpl.xsd">
```

```
  <taa:routed>
    <address-switch field="registered-origin">
      <not-present>
        <address-switch field="originating-zone">
          <address is="DefaultZone">
            <!-- Reject call with a status code of 403 (Forbidden) -->
            <reject status="403" reason="Denied by policy"/>
          </address>
          <address is="DefaultSubZone">
            <!-- Reject call with a status code of 403 (Forbidden) -->
            <reject status="403" reason="Denied by policy"/>
          </address>
          <otherwise>
            <proxy/>
          </otherwise>
        </address-switch>
      </not-present>
    </address-switch>
  </taa:routed>
</cpl>
```

CPL example: restricting access to a local gateway

In these examples, a gateway is registered to the VCS with a prefix of 9 and the administrator wants to stop calls from outside the organization being routed through it.

This can be done in two ways: using the **`address-switch`** node or the **`taa:rule-switch`** node. Examples of each are shown below.

Using the address-switch node

```
<?xml version="1.0" encoding="UTF-8" ?>
<cpl xmlns="urn:ietf:params:xml:ns:cpl"
  xmlns:taa="http://www.tandberg.net/cpl-extensions"
  xmlns:xsi="http://www.w3.org/2001/XMLSchema-instance"
  xsi:schemaLocation="urn:ietf:params:xml:ns:cpl cpl.xsd">
  <taa:routed>
    <address-switch field="destination">
      <address regex="9(.*)">
        <address-switch field="originating-zone">
          <!-- Calls coming from the traversal zone are not allowed to use this gateway -
->
          <address is="TraversalZone">
            <!-- Reject call with a status code of 403 (Forbidden) -->
            <reject status="403" reason="Denied by policy"/>
          </address>
        </address-switch>
      </address>
    </address-switch>
  </taa:routed>
</cpl>
```

Using the taa:rule-switch node

```
<?xml version="1.0" encoding="UTF-8" ?>
<cpl xmlns="urn:ietf:params:xml:ns:cpl"
  xmlns:taa="http://www.tandberg.net/cpl-extensions"
```

```
  xmlns:xsi="http://www.w3.org/2001/XMLSchema-instance"
  xsi:schemaLocation="urn:ietf:params:xml:ns:cpl cpl.xsd">
  <taa:routed>
    <taa:rule-switch>
      <taa:rule originating-zone="TraversalZone" destination="9(.*)">
        <!-- Calls coming from the traversal zone are not allowed to use this gateway -->
        <!-- Reject call with a status code of 403 (Forbidden) -->
        <reject status="403" reason="Denied by policy"/>
      </taa:rule>
      <taa:rule origin="(.*)" destination="(.*)">
        <!-- All other calls allowed -->
        <proxy/>
      </taa:rule>
    </taa:rule-switch>
  </taa:routed>
</cpl>
```

CPL example: redirecting failed calls based on status code

The output from a **`proxy`** node allow actions to be taken based on the result of the proxy operation. In base CPL a single failure output is allowed which is invoked if the call attempt fails for any reason (see section 6.1 of *RFC 3880* for details).

The VCS supports an extension to the base CPL specification that allows a status code to be specified so that the failure action is only invoked if the call attempt fails for the specified reason. In addition the VCS allows multiple failure outputs to be specified within a single proxy node. This allows a script to redirect the call to different locations (such as different recorded messages) based on the exact reason for call failure.

For example:

```
<?xml version="1.0" encoding="UTF-8" ?>
<cpl xmlns="urn:ietf:params:xml:ns:cpl"
  xmlns:taa="http://www.tandberg.net/cpl-extensions"
  xmlns:xsi="http://www.w3.org/2001/XMLSchema-instance"
  xsi:schemaLocation="urn:ietf:params:xml:ns:cpl cpl.xsd">
  <taa:routed>
    <!-- Proxy the call normally, but redirect to different recorded messages based on --
>
    <!-- the particular error response we get -->
    <proxy>
      <failure status="403">
        <!-- Call attempt failed with 403 (Forbidden) -->
        <taa:location url="forbidden-message@example.com" clear="yes">
          <proxy/>
        </taa:location>
      </failure>
      <failure status="404">
        <!-- Call attempt failed with 404 (Not Found) -->
        <taa:location url="notfound-message@example.com" clear="yes">
          <proxy/>
        </taa:location>
      </failure>
      <failure>
        <!-- General catch-all failure handler for all other error responses -->
        <taa:location url="failed-message@example.com" clear="yes">
          <proxy/>
        </taa:location>
```

```
      </failure>
    </proxy>
  </taa:routed>
</cpl>
```

CPL example: reject attempts to subscribe to a presentity

In this example, attempts to subscribe to the presence of **user@example.com** are rejected.

```
<?xml version="1.0" encoding="UTF-8" ?>
<cpl xmlns="urn:ietf:params:xml:ns:cpl"
  xmlns:taa="http://www.tandberg.net/cpl-extensions"
  xmlns:xsi="http://www.w3.org/2001/XMLSchema-instance"
  xsi:schemaLocation="urn:ietf:params:xml:ns:cpl cpl.xsd">
  <taa:routed>
    <taa:rule-switch>
      <taa:rule origin=".*" destination="user@example.com" message-regex="^SUBSCRIBE.*">
        <!-- Cannot subscribe to user@example.com -->
        <!-- Reject call with a status code of 403 (Forbidden) -->
        <reject status="403" reason="Denied by policy"/>
      </taa:rule>
    </taa:rule-switch>
  </taa:routed>
</cpl>
```

LDAP server configuration for device authentication

The VCS can be configured to authenticate devices against an H.350 directory service on an LDAP server.

This section describes how to:

- download the schemas that must be installed on the LDAP server
- install and configure two common types of LDAP servers for use with the VCS:
  - Microsoft Active Directory
  - OpenLDAP

Downloading the H.350 schemas

The following ITU specifications describe the schemas which are required to be installed on the LDAP server:

H.350	Directory services architecture for multimedia conferencing - an LDAP schema to represent endpoints on the network.
H.350.1	Directory services architecture for H.323 - an LDAP schema to represent H.323 endpoints.
H.350.2	Directory services architecture for H.235 - an LDAP schema to represent H.235 elements.
H.350.4	Directory services architecture for SIP - an LDAP schema to represent SIP endpoints.

The schemas can be downloaded from the web interface on the VCS. To do this:

1. Go to **Configuration > Authentication > Devices > H.350 directory schemas**. You are presented with a list of downloadable schemas.
2. Click on the **Download** button next to each file to open it.
3. Use your browser's **Save As** command to store it on your file system.

Configuring a Microsoft Active Directory LDAP server

Prerequisites

These instructions assume that Active Directory has already been installed. For details on installing Active Directory please consult your Windows documentation.

The following instructions are for Windows Server 2003 Enterprise Edition. If you are not using this version of Windows, your instructions may vary.

Installing the H.350 schemas

After you have downloaded the H.350 schemas, install them as follows:

Open an elevated command prompt by right-clicking Command Prompt and selecting 'Run as administrator'. For each file execute the following command:

```
ldifde -i -c DC=X <ldap_base> -f filename.ldf
```

where:

<ldap_base> is the base DN for your Active Directory server.

Adding H.350 objects

Create the organizational hierarchy:

1. Open up the Active Directory **Users and Computers** MMC snap-in.
2. Under your BaseDN right-click and select **New Organizational Unit**.
3. Create an Organizational unit called *h350*.

It is good practice to keep the H.350 directory in its own organizational unit to separate out H.350 objects from other types of objects. This allows access controls to be setup which only allow the VCS read access to the BaseDN and therefore limit access to other sections of the directory.

Add the H.350 objects:

1. Create an ldif file with the following contents:

```
# MeetingRoom1 endpoint
dn: commUniqueId=comm1,ou=h350,DC=X
objectClass: commObject
objectClass: h323Identity
objectClass: h235Identity
objectClass: SIPIdentity
commUniqueId: comm1
h323Identityh323-ID: MeetingRoom1
h323IdentitydialedDigits: 626262
h235IdentityEndpointID: meetingroom1
h235IdentityPassword: mypassword
SIPIdentityUserName: meetingroom1
SIPIdentityPassword: mypassword
SIPIdentitySIPURI: sip:MeetingRoom@X
```

2. Add the ldif file to the server using the command:
   ldifde -i -c DC=X <ldap_base> -f filename.ldf
   where:
   <ldap_base> is the base DN of your Active Directory Server.

The example above will add a single endpoint with an H.323 ID alias of **MeetingRoom1**, an E.164 alias of **626262** and a SIP URI of **MeetingRoom@X**. The entry also has H.235 and SIP credentials of ID **meetingroom1** and password **mypassword** which are used during authentication.

H.323 registrations will look for the H.323 and H.235 attributes; SIP will look for the SIP attributes. Therefore if your endpoint is registering with just one protocol you do not need to include elements relating to the other.

Note: the SIP URI in the **ldif** file must be prefixed by **sip:**.

For information about what happens when an alias is not in the LDAP database see **Source of aliases for registration** in the Using an H.350 directory service lookup via LDAP [p.145] section.

Securing with TLS

To enable Active Directory to use TLS, you must request and install a certificate on the Active Directory server. The certificate must meet the following requirements:

- Be located in the Local Computer's Personal certificate store. This can be seen using the **Certificates** MMC snap-in.
- Have the private details on how to obtain a key associated for use with it stored locally. When viewing the certificate you should see a message saying "You have a private key that corresponds to this certificate''.
- Have a private key that does not have strong private key protection enabled. This is an attribute that can be added to a key request.
- The Enhanced Key Usage extension includes the Server Authentication object identifier, again this forms part of the key request.
- Issued by a CA that both the domain controller and the client trust.
- Include the Active Directory fully qualified domain name of the domain controller in the common name in the subject field and/or the DNS entry in the subject alternative name extension.

To configure the VCS to use TLS on the connection to the LDAP server you must upload the CA's certificate as a trusted CA certificate. This can be done on the VCS by going to: **Maintenance > Security certificates > Trusted CA certificate**.

Configuring an OpenLDAP server

Prerequisites

These instructions assume that an OpenLDAP server has already been installed. For details on installing OpenLDAP see the documentation at http://www.openldap.org.

The following examples use a standard OpenLDAP installation on the Linux platform. For installations on other platforms the location of the OpenLDAP configuration files may be different. See the OpenLDAP installation documentation for details.

Installing the H.350 schemas

1. Download all the schema files from the VCS (**Configuration > Authentication > Devices > LDAP schemas**). Ensure that all characters in the filename are in lowercase and name each file with a .schema extension. Hence:
   commobject.schema
   h323identity.schema
   h235identity.schema
   sipidentity.schema
2. Determine the index of each schema file via **`slapcat`**. For example,for **commobject.schema**:
   `sudo slapcat -f schema_convert.conf -F ldif_output -n 0 | grep commobject,cn=schema`
   will return something similar to: **`dn: cn={14}commobject,cn=schema,cn=config`**
   The index value inside the curly brackets {} will vary.
3. Convert each schema file into ldif format via **`slapcat`**. Use the index value returned by the previous command. For example, for **commobject.schema**:
   `slapcat -f schema_convert.conf -F ldif_output -n0 -H ldap:///cn={14}commobject,cn=schema,cn=config -l cn=commobject.ldif`
4. Use a text editor to edit the newly created file (**cn=commobject.ldif** in the case of the commobject file) and remove the following lines:
   `structuralObjectClass:`
   `entryUUID:`
   `creatorsName:`
   `createTimestamp:`
   `entryCSN:`
   `modifiersName:`
   `modifyTimestamp:`
5. Add each schema to the ldap database via **`ldapadd`**. For example, for **cn=commobject.ldif**:
   `sudo ldapadd -Q -Y EXTERNAL -H ldapi:/// -f cn\=commobject.ldif`
   (the backslash after **`cn`** is an escape character)
6. Repeat these steps for every schema file.

More information is available at https://help.ubuntu.com/13.04/serverguide/openldap-server.html.

Adding H.350 objects

Create the organizational hierarchy:

1. Create an **`ldif`** file with the following contents:

```
# This example creates a single organizational unit to contain the H.350 objects
dn: ou=h350,dc=my-domain,dc=com
objectClass: organizationalUnit
ou: h350
```

2. Add the ldif file to the server via **`slapadd`** using the format:
   `slapadd -l <ldif_file>`

This organizational unit will form the BaseDN to which the VCS will issue searches. In this example the BaseDN will be: **`ou=h350,dc=my-domain,dc=com`**.

It is good practice to keep the H.350 directory in its own organizational unit to separate out H.350 objects from other types of objects. This allows access controls to be setup which only allow the VCS read access to the BaseDN and therefore limit access to other sections of the directory.

Note: the SIP URI in the **ldif** file must be prefixed by **sip:**

Add the H.350 objects:

1. Create an ldif file with the following contents:

```
# MeetingRoom1 endpoint
dn: commUniqueId=comm1,ou=h350,dc=mydomain,dc=com
objectClass: commObject
objectClass: h323Identity
objectClass: h235Identity
objectClass: SIPIdentity
commUniqueId: comm1
h323Identityh323-ID: MeetingRoom1
h323IdentitydialedDigits: 626262
h235IdentityEndpointID: meetingroom1
h235IdentityPassword: mypassword
SIPIdentityUserName: meetingroom1
SIPIdentityPassword: mypassword
SIPIdentitySIPURI: sip:MeetingRoom@domain.com
```

2. Add the ldif file to the server via **slapadd** using the format:
   slapadd -l <ldif_file>

The example above will add a single endpoint with an H.323 ID alias of **MeetingRoom1**, an E.164 alias of **626262** and a SIP URI of **MeetingRoom@domain.com**. The entry also has H.235 and SIP credentials of ID **meetingroom1** and password **mypassword** which are used during authentication.

H.323 registrations will look for the H.323 and H.235 attributes; SIP will look for the SIP attributes. Therefore if your endpoint is registering with just one protocol you do not need to include elements relating to the other.

For information about what happens when an alias is not in the LDAP database see **Source of aliases for registration** in the Using an H.350 directory service lookup via LDAP [p.145] section.

Securing with TLS

The connection to the LDAP server can be encrypted by enabling Transport Level Security (TLS) on the connection. To do this you must create an X.509 certificate for the LDAP server to allow the VCS to verify the server's identity. After the certificate has been created you will need to install the following three files associated with the certificate onto the LDAP server:

- the certificate for the LDAP server
- the private key for the LDAP server
- the certificate of the Certificate Authority (CA) that was used to sign the LDAP server's certificate

All three files should be in PEM file format.

The LDAP server must be configured to use the certificate. To do this:

- Edit /etc/openldap/slapd.conf and add the following three lines:
  TLSCACertificateFile <path to CA certificate>
  TLSCertificateFile <path to LDAP server certificate>
  TLSCertificateKeyFile <path to LDAP private key>

The OpenLDAP daemon (**`slapd`**) must be restarted for the TLS settings to take effect.

To configure the VCS to use TLS on the connection to the LDAP server you must upload the CA's certificate as a trusted CA certificate. This can be done on the VCS by going to: **Maintenance > Security certificates > Trusted CA certificate**.

DNS configuration examples

This section gives examples of DNS configuration using Microsoft DNS Server and BIND 8 & 9.

These examples show how to set up an SRV record to handle H.323 URIs of the form **user@example.com**. These are handled by the system with the fully qualified domain name of **vcs.example.com** which is listening on port 1719, the default registration port.

It is assumed that both A and AAAA records already exist for **vcs.example.com**. If not, you will need to add them.

Verifying the SRV record

There are a range of tools available to investigate DNS records. One commonly found on Microsoft Windows and UNIX platforms is **nslookup**. Use this to verify that everything is working as expected. For example:

```
nslookup -querytype=srv_h323ls._udp.example.com
```

and check the output.

Microsoft DNS server

Using Microsoft DNS Server you can add the SRV record using either the command line or the MMC snap-in.

To use the command line, on the DNS server open a command window and enter:

```
dnscmd . /RecordAdd domain service_name SRV Priority Weight Port Target
```

where:

domain	is the domain into which you want to insert the record
service_name	is the name of the service you are adding
Priority	is the priority as defined by *RFC 2782*
Weight	is the weight as defined by *RFC 2782*
Port	is the port on which the system hosting the domain is listening
Target	is the FQDN of the system hosting the domain

For example:

```
dnscmd . /RecordAdd example.com_h323ls._udp SRV 1 0 1719 vcs.example.com
```

BIND 8 & 9

BIND is a commonly used DNS server on UNIX and Linux systems. Configuration is based around two sets of text files: **named.conf** which describes which zones are represented by the server, and a selection of zone files which describe the detail of each zone.

BIND is sometimes run chrooted for increased security. This gives the program a new root directory, which means that the configuration files may not appear where you expect them to be. To see if this is the case on your system, run

```
ps aux | grep named
```

This will give the command line that named (the BIND server) was invoked with. If there is a `-t` option, then the path following that is the new root directory and your files will be located relative to that root.

In **/etc/named.conf** look for a directory entry within the options section. This will give the directory in which the zone files are stored, possibly relative to a new root directory. In the appropriate zone section, a file entry will give the name of the file containing the zone details.

For more details of how to configure BIND servers and the DNS system in general see the publication *DNS and BIND*.

Changing the default SSH key

Using the default key means that SSH sessions established to the VCS may be vulnerable to "man-in-the-middle" attacks, so you are recommended to generate new SSH keys which are unique to your VCS.

An alarm message "Security alert: the SSH service is using the default key" is displayed if your VCS is still configured with its factory default SSH key.

To generate a new SSH key for the VCS:

1. Log into the CLI as *root*.
2. Type **`regeneratesshkey`**.
3. Type **`exit`** to log out of the root account.
4. Log in to the web interface.
5. Go to **Maintenance > Restart**. You are taken to the **Restart** page.
6. Check the number of calls and registrations currently in place.
7. Click **Restart system** and then confirm the restart when asked.

If you have a clustered VCS system you must generate new SSH keys for every cluster peer. Log into each peer in turn and follow the instructions above. You do not have to decluster or disable replication.

When you next log in to the VCS over SSH you may receive a warning that the key identity of the VCS has changed. Please follow the appropriate process for your SSH client to suppress this warning.

If your VCS is subsequently downgraded to an earlier version of VCS firmware, the default SSH keys will be restored.

Restoring default configuration (factory reset)

Very rarely, it may become necessary to run the “factory-reset” script on your system. This reinstalls the software image and resets the configuration to the functional minimum.

Note: restoring default configuration causes the system to use its current default values, which may be different from the previously configured values, particularly if the system has been upgraded from an older version. In particular this may affect port settings, such as multiplexed media ports. After restoring default configuration you may want to reset those port settings to match the expected behavior of your firewall.

Prerequisite files

The `factory-reset` procedure described below rebuilds the system based on the most recent successfully-installed software image. The files that are used for this reinstallation are stored in the **/mnt/harddisk/factory-reset/** folder on the system. These files are:

- A text file containing just the 16-character Release Key, named **rk**
- A file containing the software image in tar.gz format, named **tandberg-image.tar.gz**

In some cases (most commonly a fresh VM installation that has not been upgraded), these files will not be present on the system. If so, these files must first be put in place using SCP as root.

Performing a reset to default configuration

The following procedure must be performed from the serial console (or via a direct connection to the appliance with a keyboard and monitor). This is because the network settings will be rewritten, so any SSH session used to initiate the reset would be dropped and the output of the procedure would not be seen.

The process takes approximately 20 minutes.

1. Log in to the system as **root**.
2. Type `factory-reset`
3. Answer the questions as required:
   The recommended responses will reset the system completely to a factory default state.

Prompt	Recommended response
Keep option keys [YES/NO]?	YES
Keep IP configuration [YES/NO]?	YES
Keep ssh keys [YES/NO]?	YES
Keep ssl certificates and keys [YES/NO]?	YES
Keep root and admin passwords [YES/NO]?	YES
Save log files [YES/NO]?	YES
Replace hard disk [YES/NO]? (only applies to systems running on legacy appliance hardware)	NO

4. Finally, confirm that you want to proceed.

Resetting via USB stick

Cisco TAC may also suggest an alternative reset method. This involves downloading the software image onto a USB stick and then rebooting the system with the USB stick plugged in.

If you use this method you must clear down and rebuild the USB stick after use. Do not reset one system and then take the USB stick and re-use it on another system.

Password encryption

All passwords configured on the VCS are stored securely in either an encrypted or hashed form. This applies to the following items, which all have usernames and passwords associated with them:

- the default admin administrator account
- any additional administrator accounts
- local authentication database credentials (a list of valid usernames and passwords that are used when other devices are required to authenticate with the VCS)
- outbound connection credentials (used by the VCS when required to authenticate with another system)
- LDAP server (used by the VCS when binding to an LDAP server)

Web interface

When entering or viewing passwords using the web interface, you will see placeholder characters (e.g. dots or stars, depending on your browser) instead of the characters you are typing.

Command line interface (CLI)

When entering passwords using the command line interface (CLI), you type the password in plain text. However, after the command has been executed, the password is displayed in its encrypted form with a **`{cipher}`** prefix, for example:

```
xConfiguration Authentication Password: "{cipher}xcy6k+4NgB025vYEgoEXXw=="
```

Note that FindMe is a standalone application that can be hosted by the VCS or by another remote server. This means that FindMe account information is not configured or accessible using the CLI of the VCS. However, FindMe account passwords are still stored securely.

Maximum length of passwords

For each type of password, the maximum number of plain text characters that can be entered is shown in the table below.

Password type	Maximum length
Admin account	1024
Other local administrator accounts	1024
Local database authentication credentials	128
Outbound connection credentials	128
LDAP server	60
FindMe accounts	1024

Note that:

- local administrator account passwords are hashed using SHA512; other passwords are stored in an encrypted format
- when a password is encrypted and stored, it uses more characters than the original plain text version of the password

Pattern matching variables

The VCS makes use of pattern matching in a number of its features, namely Allow Lists and Deny Lists, pre-search transforms and when configuring search rules and zone transforms.

For each of these pattern matches, the VCS allows you to use a variable that it will replace with the current configuration values before the pattern is checked.

These variables can be used as either or both of:

- all or part of the pattern that is being searched for
- all or part of the string that is replacing the pattern that was found

The variables can be used in all types of patterns (*Prefix*, *Suffix*, *Regex* and *Exact*).

The table below shows the strings that are valid as variables, and the values they represent.

String	Represents value returned by...	When used in a Pattern field	When used in a Replace field
%ip%	xConfiguration Ethernet 1 IP V4 Address xConfiguration Ethernet 1 IP V6 Address xConfiguration Ethernet 2 IP V4 Address xConfiguration Ethernet 2 IP V6 Address	Matches all IPv4 and IPv6 addresses. Applies to all peer addresses if the VCS is part of a cluster.	not applicable
%ipv4%	xConfiguration Ethernet 1 IP V4 Address xConfiguration Ethernet 2 IP V4 Address	Matches the IPv4 addresses currently configured for LAN 1 and LAN 2. Applies to all peer addresses if the VCS is part of a cluster.	not applicable
%ipv4_1%	xConfiguration Ethernet 1 IP V4 Address	Matches the IPv4 address currently configured for LAN 1. Applies to all peer addresses if the VCS is part of a cluster.	Replaces the string with the LAN 1 IPv4 address. If the VCS is part of a cluster, the address of the local peer is always used.
%ipv4_2%	xConfiguration Ethernet 2 IP V4 Address	Matches the IPv4 address currently configured for LAN 2. Applies to all peer addresses if the VCS is part of a cluster.	Replaces the string with the LAN 2 IPv4 address. If the VCS is part of a cluster, the address of the local peer is always used.

String	Represents value returned by...	When used in a Pattern field	When used in a Replace field
%ipv6%	xConfiguration Ethernet 1 IP V6 Address xConfiguration Ethernet 2 IP V6 Address	Matches the IPv6 addresses currently configured for LAN 1 and LAN 2. Applies to all peer addresses if the VCS is part of a cluster.	not applicable
%ipv6_1%	xConfiguration Ethernet 1 IP V6 Address	Matches the IPv6 address currently configured for LAN 1. Applies to all peer addresses if the VCS is part of a cluster.	Replaces the string with the LAN 1 IPv6 address. If the VCS is part of a cluster, the address of the local peer is always used.
%ipv6_2%	xConfiguration Ethernet 2 IP V6 Address	Matches the IPv6 address currently configured for LAN 2. Applies to all peer addresses if the VCS is part of a cluster.	Replaces the string with the LAN 2 IPv6 address. If the VCS is part of a cluster, the address of the local peer is always used.
%localdomains%	xConfiguration SIP Domains Domain 1 Name ... xConfiguration SIP Domains Domain 200 Name	Matches all the SIP domains currently configured on the VCS.	not applicable
%localdomain1% ... %localdomain200%	xConfiguration SIP Domains Domain 1 Name ... xConfiguration SIP Domains Domain 200 Name	Matches the specified SIP domain. Up to 200 SIP domains can be configured on the VCS, and they are identified by an index number between 1 and 200.	Replaces the string with the specified SIP domain.
%systemname%	xConfiguration SystemUnit Name	Matches the VCS's System Name.	Replaces the string with the VCS's System Name.

You can test whether a pattern matches a particular alias and is transformed in the expected way by using the Check pattern tool (**Maintenance > Tools > Check pattern**).

Port reference

The following tables list the IP ports and protocols used by VCS for general services and functions. Also see:

- Microsoft Lync B2BUA port reference [p.424]
- Device authentication port reference [p.426]
- Mobile and remote access port reference [p.422]

The tables show the generic defaults for each service, many of which are configurable. The actual services and ports used on your system will vary depending on its configuration, the option keys installed and features that have been enabled. A specific list of all the IP ports in use on a particular VCS can be viewed via the port usage pages (**Maintenance > Tools > Port usage**).

When Advanced Networking is enabled, all ports configured on the VCS, including those relating to firewall traversal, apply to both IP addresses; you cannot configure ports separately for each IP address.

Local VCS inbound/outbound ports

These are the IP ports on the VCS used to receive (inbound) or send (outbound) communications with other systems.

Table 8: Local inbound/outbound ports

Service/ function	Purpose	VCS port (default)	Direction	Configurable via
SSH	Encrypted command line administration.	22 TCP	inbound	not configurable
HTTP	Unencrypted web administration.	80 TCP	inbound	not configurable
NTP	System time updates (and important for H.235 security).	123 UDP	outbound	not configurable
SNMP	Network management.	161 UDP	inbound	not configurable
HTTPS	Encrypted web administration.	443 TCP	inbound	not configurable
Clustering	IPsec secure communication between cluster peers.	500 UDP	inbound outbound	not configurable
Clustering	IPsec secure communication between cluster peers.	IP protocol 51 (IPSec AH)	inbound outbound	not configurable
Reserved		636	inbound	not configurable
DNS	Sending requests to DNS servers.	1024 - 65535 UDP	outbound	**System > DNS**
Gatekeeper discovery	Multicast gatekeeper discovery. The VCS does not listen on this port when **H.323 Gatekeeper Auto discover mode** is set to *Off* (this disables IGMP messages).	1718 UDP	inbound	not configurable
H.323 registration Clustering	Listens for inbound H.323 UDP registrations. If the VCS is part of a cluster, this port is used for inbound and outbound communication with peers, even if H.323 is disabled.	1719 UDP	inbound outbound	**Configuration > Protocols > H.323**

Table 8: Local inbound/outbound ports (continued)

Service/ function	Purpose	VCS port (default)	Direction	Configurable via
H.323 call signaling	Listens for H.323 call signaling.	1720 TCP	inbound	**Configuration > Protocols > H.323**
Assent call signaling	Assent signaling on the VCS Expressway.	2776 TCP	inbound	**Configuration > Traversal > Ports**
H.460.18 call signaling	H.460.18 signaling on the VCS Expressway.	2777 TCP	inbound	**Configuration > Traversal > Ports**
Traversal server media demultiplexing RTP/RTCP	Optionally used on the VCS Expressway for demultiplexing RTP/RTCP media on Small/Medium systems only.	2776/2777 UDP	inbound outbound	**Configuration > Traversal > Ports**
TURN services	Listening port for TURN relay requests on VCS Expressway.	3478 UDP *	inbound	**Configuration > Traversal > TURN**
System database	Encrypted administration connector to the VCS system database.	4444 TCP	inbound	not configurable
SIP UDP	Listens for incoming SIP UDP calls.	5060 UDP	inbound outbound	**Configuration > Protocols > SIP**
SIP TCP	Listens for incoming SIP TCP calls.	5060 TCP	inbound	**Configuration > Protocols > SIP**
SIP TLS	Listens for incoming SIP TLS calls.	5061 TCP	inbound	**Configuration > Protocols > SIP**
B2BUA	Internal ports used by the B2BUA. Traffic sent to these ports is blocked automatically by the VCS's non-configurable firewall rules.	5071, 5073 TCP	inbound	not configurable
Traversal server zone H.323 Port	Port on the VCS Expressway used for H.323 firewall traversal from a particular traversal client.	6001 UDP, increments by 1 for each new zone	inbound	**Configuration > Zones**
Traversal server zone SIP Port	Port on the VCS Expressway used for SIP firewall traversal from a particular traversal client.	7001 TCP, increments by 1 for each new zone	inbound	**Configuration > Zones**
H.225 and H.245 call signaling port range	Range of ports used for call signaling after a call is established.	15000 - 19999 TCP	inbound outbound	**Configuration > Protocols > H.323**
SIP TCP outbound port range	Range of ports used by outbound TCP/TLS SIP connections to a remote SIP device.	25000 - 29999 TCP	outbound	**Configuration > Protocols > SIP**
Ephemeral ports	Various purposes. (The default range of 30000 – 35999 applies to new installations of X8.1 or later; the previous default range of 40000 – 49999 still applies to earlier releases that have upgraded to X8.1.)	30000 – 35999	outbound	**System > Administration**

Table 8: Local inbound/outbound ports (continued)

Service/ function	Purpose	VCS port (default)	Direction	Configurable via
Multiplexed traversal media (Assent, H.460.19 multiplexed media)	Ports used for multiplexed media in traversal calls. RTP and RTCP media demultiplexing ports are allocated from the start of the traversal media ports range. On new installations of X8.1 or later, the default media traversal port range is 36000 to 59999, and is set on the VCS Control (**Configuration > Local Zones > Traversal Subzone**). In Large VCS Expressway systems the first 12 ports in the range – 36000 to 36011 by default – are always reserved for multiplexed traffic. The VCS Expressway listens on these ports. You cannot configure a distinct range of demultiplex listening ports on Large systems: they always use the first 6 pairs in the media port range. On Small/Medium systems you can explicitly specify which 2 ports listen for multiplexed RTP/RTCP traffic, on the VCS Expressway (**Configuration > Traversal > Ports**). On upgrades to X8.2 or later, the VCS Control retains the media traversal port range from the previous version (could be 50000 - 54999 or 36000 - 59999, depending on source version). The VCS Expressway retains the previously configured demultiplexing pair (either 2776 & 2777 or 50000 & 50001 by default, depending on upgrade path) and the switch **Use configured demultiplexing ports** is set to *Yes*. If you do not want to use a particular pair of ports, switch **Use configured demultiplexing ports** to *No*, then the VCS Expressway will listen on the first pair of ports in the media traversal port range (36000 and 36001 by default). In this case, we recommend that you close the previously configured ports after you configure the firewall for the new ports.	36000 – 36001 UDP (Small / Medium systems) or 36000 – 36011 UDP (Large systems)	inbound outbound	**Configuration > Local Zone > Traversal Subzone**

Table 8: Local inbound/outbound ports (continued)

Service/ function	Purpose	VCS port (default)	Direction	Configurable via
Non-multiplexed media port range	Range of ports used for non-multiplexed media. Ports are allocated from this range in pairs, with the first port number of each pair being an even number. On new installations of X8.1 or later, the default media traversal port range is 36000 to 59999, and is set on the VCS Control (**Configuration > Local Zones > Traversal Subzone**). In Large VCS Expressway systems the first 12 ports in the range – 36000 to 36011 by default – are always reserved for multiplexed traffic. The VCS Expressway listens on these ports. You cannot configure a distinct range of demultiplex listening ports on Large systems: they always use the first 6 pairs in the media port range. On Small/Medium systems you can explicitly specify which 2 ports listen for multiplexed RTP/RTCP traffic, on the VCS Expressway (**Configuration > Traversal > Ports**). On upgrades to X8.2 or later, the VCS Control retains the media traversal port range from the previous version (could be 50000 - 54999 or 36000 - 59999, depending on source version). The VCS Expressway retains the previously configured demultiplexing pair (either 2776 & 2777 or 50000 & 50001 by default, depending on upgrade path) and the switch **Use configured demultiplexing ports** is set to *Yes*. If you do not want to use a particular pair of ports, switch **Use configured demultiplexing ports** to *No*, then the VCS Expressway will listen on the first pair of ports in the media traversal port range (36000 and 36001 by default). In this case, we recommend that you close the previously configured ports after you configure the firewall for the new ports.	36002 – 59999 UDP (Small / Medium systems) or 36012 – 59999 UDP (Large systems)	inbound outbound	**Configuration > Local Zone > Traversal Subzone**
TURN relay media port range	Range of ports available for TURN media relay.	24000 – 29999 UDP **	inbound outbound	**Configuration > Traversal > TURN**

Note that two services or functions cannot share the same port and protocol; an alarm will be raised if you attempt to change an existing port or range and it conflicts with another service.

* On Large systems you can configure a range of TURN request listening ports. The default range is 3478 – 3483.

** The default TURN relay media port range of 24000 – 29999 applies to new installations of X8.1 or later. The previous default range of 60000 – 61799 still applies to earlier releases that have upgraded to X8.1.

Remote listening ports

These tables show the default listening (destination) ports on the remote systems with which the VCS communicates.

The source port on the VCS for all of these communications is assigned from the VCS's ephemeral range.

Table 9: Remote listening ports

Service/ function	Purpose	Destination port (default)	Configurable via
DNS	Requests to a DNS server.	53 UDP	**System > DNS**
External manager	Outbound connection to an external manager, for example Cisco TMS.	80 TCP	**System > External manager**
NTP	System time updates.	123 UDP	**System > Time**
LDAP account authentication	LDAP queries for login account authentication.	389 / 636 TCP	**Users > LDAP configuration**
TMS Provisioning Extension	Connection to Cisco TMSPE services.	443 TCP	**System > TMS Provisioning Extension services**
Incident reporting	Sending application failure details.	443 TCP	**Maintenance > Diagnostics > Incident reporting > Configuration**
Third-party FindMe / User Policy server	Outbound connection to a third-party FindMe / User Policy server.	443 TCP	**Applications > FindMe**
Remote logging	Sending messages to the remote syslog server.	514 UDP 6514 TCP	**Maintenance > Logging**
Neighbors (H.323)	H.323 connection to a neighbor zone.	1710 UDP	**Configuration > Zones**
Neighbors (SIP)	SIP connection to a neighbor zone.	5060 / 5061 TCP	**Configuration > Zones**
Traversal zone (H.323)	H.323 connection to a traversal server.	6001 UDP	**Configuration > Zones**
Traversal zone (SIP)	SIP connection to a traversal server.	7001 TCP	**Configuration > Zones**
Endpoint (H.323)	Endpoint listening port	1720 TCP	Defined by endpoint's registration
Endpoint (SIP)	Endpoint listening port	5060 / 5061 TCP / UDP	Defined by endpoint's registration
TURN media relay	Range of ports available for TURN media relay.	24000 – 29999 UDP **	**Configuration > Traversal > TURN** (on VCS Expressway)

** The default TURN relay media port range of 24000 – 29999 applies to new installations of X8.1 or later. The previous default range of 60000 – 61799 still applies to earlier releases that have upgraded to X8.1.

Mobile and remote access port reference

This section summarizes the ports that need to be opened on the firewalls between your internal network (where the VCS Control is located) and the DMZ (where the VCS Expressway is located) and between the DMZ and the public internet.

Outbound from VCS Control (private) to VCS Expressway (DMZ)

Purpose	Protocol	VCS Control (source)	VCS Expressway (listening)
XMPP (IM and Presence)	TCP	Ephemeral port	7400
SSH (HTTP/S tunnels)	TCP	Ephemeral port	2222
Traversal zone SIP signaling	TLS	25000 to 29999	7001
Traversal zone SIP media (for small/medium systems on X8.1 or later)	UDP	36000 to 59999*	36000 (RTP), 36001 (RTCP) (defaults) 2776 (RTP), 2777 (RTCP) (old defaults*)
Traversal zone SIP media (for large systems)	UDP	36000 to 59999*	36000 to 36011 (6 pairs of RTP and RTCP ports for multiplexed media traversal)

Outbound from VCS Expressway (DMZ) to public internet

Purpose	Protocol	VCS Expressway (source)	Internet endpoint (listening)
SIP media	UDP	36002 to 59999 or 36012 to 59999	>= 1024
SIP signaling	TLS	25000 to 29999	>= 1024

Inbound from public internet to VCS Expressway (DMZ)

Purpose	Protocol	Internet endpoint (source)	VCS Expressway (listening)
XMPP (IM and Presence)	TCP	>= 1024	5222
HTTP proxy (UDS)	TCP	>= 1024	8443
Media	UDP	>= 1024	36002 to 59999 or 36012 to 59999*
SIP signaling	TLS	>= 1024	5061
HTTPS (administrative access)	TCP	>= 1024	443

From VCS Control to Unified CM / CUC

Purpose	Protocol	VCS Control (source)	Unified CM (listening)
XMPP (IM and Presence)	TCP	Ephemeral port	7400 (IM and Presence)
HTTP proxy (UDS)	TCP	Ephemeral port	8443 (Unified CM)
HTTP proxy (SOAP)	TCP	Ephemeral port	8443 (IM and Presence Service)
HTTP (configuration file retrieval)	TCP	Ephemeral port	6970
CUC (voicemail)	TCP	Ephemeral port	443 (CUC)
Media	UDP	36000 to 59999*	>= 1024
SIP signaling	TCP	25000 to 29999	5060
Secure SIP signaling	TLS	25000 to 29999	5061

* On new installations of X8.1 or later, the default media traversal port range is 36000 to 59999, and is set on the VCS Control (**Configuration > Local Zones > Traversal Subzone**). In Large VCS Expressway systems the first 12 ports in the range – 36000 to 36011 by default – are always reserved for multiplexed traffic. The VCS Expressway listens on these ports. You cannot configure a distinct range of demultiplex listening ports on Large systems: they always use the first 6 pairs in the media port range. On Small/Medium systems you can explicitly specify which 2 ports listen for multiplexed RTP/RTCP traffic, on the VCS Expressway (**Configuration > Traversal > Ports**). On upgrades to X8.2 or later, the VCS Control retains the media traversal port range from the previous version (could be 50000 - 54999 or 36000 - 59999, depending on source version). The VCS Expressway retains the previously configured demultiplexing pair (either 2776 & 2777 or 50000 & 50001 by default, depending on upgrade path) and the switch **Use configured demultiplexing ports** is set to *Yes*. If you do not want to use a particular pair of ports, switch **Use configured demultiplexing ports** to *No*, then the VCS Expressway will listen on the first pair of ports in the media traversal port range (36000 and 36001 by default). In this case, we recommend that you close the previously configured ports after you configure the firewall for the new ports.

Note that:

- Ports 8191/8192 TCP and 8883/8884 TCP are used internally within the VCS Control and the VCS Expressway applications. Therefore these ports must not be allocated for any other purpose. The VCS Expressway listens externally on port 8883; therefore we recommend that you create custom firewall rules on the external LAN interface to drop TCP traffic on that port.
- The VCS Expressway listens on port 2222 for SSH tunnel traffic. The only legitimate sender of such traffic is the VCS Control (cluster). Therefore we recommend that you create the following firewall rules for the SSH tunnels service:
  - one or more rules to allow all of the VCS Control peer addresses (via the internal LAN interface, if appropriate)
  - followed by a lower priority (higher number) rule that drops all traffic for the SSH tunnels service (on the internal LAN interface if appropriate, and if so, another rule to drop all traffic on the external interface)

Microsoft Lync B2BUA port reference

The port numbers listed below are the default port values. The values used in a real deployment may vary if they have been modified, for example, by changes of registry settings or through group policy, on Lync and Lync client, or configuration on VCS (**Applications > B2BUA**).

Between B2BUA and Lync

Purpose	Protocol	B2BUA IP port	Lync IP port
Signaling to Lync Server	TLS	65072	5061 (Lync signaling destination port)
Signaling from Lync Server	TLS	65072	Lync ephemeral port
Presence to Lync Server	TLS	10011	5061 (Lync signaling destination port)
Presence from Lync Server	TLS	10011	Lync ephemeral port
Media (the Lync B2BUA should be deployed on a separate "Lync Gateway" VCS and thus there should be no conflict with the standard traversal media port range)	UDP	56000 to 57000	Lync client media ports

Between B2BUA and VCS (internal communications)

Purpose	Protocol	B2BUA IP port	VCS IP port
Internal communications with VCS application	TLS	65070	SIP TCP outbound port

Between B2BUA and VCS Expressway hosting the TURN server

Purpose	Protocol	B2BUA IP port	VCS Expressway IP port
All communications	UDP	56000 to 57000	3478 (media/signaling) *

Ensure that the firewall is opened to allow the data traffic through from B2BUA to VCS Expressway.

* On Large systems you can configure a range of TURN request listening ports. The default range is 3478 – 3483.

External Lync client and Edge server

Purpose	Protocol	Edge server	Lync client
SIP/MTLS used between Lync Client and Edge server for signaling (including any ICE messaging to the Edge Server)	TCP	5061	5061
SIP/TLS	TCP	443	443

Purpose	Protocol	Edge server	Lync client
STUN	UDP	3478	3478
UDP Media	UDP	50000-59999	1024-65535
TCP Media	TCP	50000-59999	1024-65535

External Lync client / Edge server and VCS Expressway

Purpose	Protocol	Lync client / Edge server	VCS Expressway
ICE messaging (STUN/TURN) if media is sent via the VCS Expressway	UDP	3478	3478
UDP media if it is sent via the VCS Expressway	UDP	1024-65535	24000-29999 **

** The default TURN relay media port range of 24000 – 29999 applies to new installations of X8.1 or later. The previous default range of 60000 – 61799 still applies to earlier releases that have upgraded to X8.1.

Between B2BUA and transcoder

Purpose	Protocol	B2BUA IP port	Transcoder
B2BUA communications with transcoder (Cisco AM GW)	TLS	65080	5061

Device authentication port reference

H.350 directory service

The following table lists the ports used for device authentication between VCS and the H.350 server. They are configurable via **Configuration > Authentication > Devices > H.350 directory service**.

Purpose	VCS port	Destination port
H.350 LDAP server	TCP ephemeral port	TCP/389 or TCP/636

Active Directory (direct)

The following table lists the ports used for device authentication between VCS and the AD system. They are configurable via **Configuration > Authentication > Devices > Active Directory Service**.

Purpose	VCS port	Destination port
Kerberos Key Distribution Center	UDP ephemeral port	88 UDP
Kerberos	TCP ephemeral port	88 TCP
VCS with Domain Controller (CLDAP)	UDP ephemeral port	389 UDP
VCS with Domain Controller (LDAP)	TCP ephemeral port	389 / 636 TCP
Client credential authentication with the Domain Controller (Microsoft-DS). VCS initially tries port 445, but if that cannot be reached it tries port 139.	TCP ephemeral port	445 / 139 TCP

Regular expressions

Regular expressions can be used in conjunction with a number of VCS features such as alias transformations, zone transformations, CPL policy and ENUM. The VCS uses POSIX format regular expression syntax. The table below provides a list of commonly used special characters in regular expression syntax. This is only a subset of the full range of expressions available. For a detailed description of regular expression syntax see the publication *Regular Expression Pocket Reference*.

Character	Description	Example
.	Matches any single character.	
\d	Matches any decimal digit, i.e. 0-9.	
*	Matches 0 or more repetitions of the previous character or expression.	**.*** matches against any sequence of characters
+	Matches 1 or more repetitions of the previous character or expression.	
?	Matches 0 or 1 repetitions of the previous character or expression.	**9?123** matches against 9123 and 123
{n}	Matches n repetitions of the previous character or expression	**\d{3}** matches 3 digits
{n,m}	Matches n to m repetitions of the previous character or expression	**\d{3,5}** matches 3, 4 or 5 digits
[...]	Matches a set of specified characters. Each character in the set can be specified individually, or a range can be specified by giving the first character in the range followed by the - character and then the last character in the range. You cannot use special characters within the [] - they will be taken literally.	**[a-z]** matches any alphabetical character **[0-9#*]** matches against any single E.164 character - the E.164 character set is made up of the digits 0-9 plus the hash key (#) and the asterisk key (*)
[^...]	Matches anything except the set of specified characters. Each character in the set can be specified individually, or a range can be specified by giving the first character in the range followed by the - character and then the last character in the range. You cannot use special characters within the [] - they will be taken literally.	**[^a-z]** matches any non-alphabetical character **[^0-9#*]** matches anything other than the digits 0-9, the hash key (#) and the asterisk key (*)
(...)	Groups a set of matching characters together. Groups can then be referenced in order using the characters \1, \2, etc. as part of a replace string.	A regular expression can be constructed to transform a URI containing a user's full name to a URI based on their initials. The regular expression **(.).*_(.).*(@example.com)** would match against the user **john_smith@example.com** and with a replace string of **\1\2\3** would transform it to **js@example.com**
|	Matches against one expression or an alternate expression.	**.*@example.(net|com)** matches against any URI for the domain **example.com** or the domain **example.net**

\	Escapes a regular expression special character.	
^	Signifies the start of a line. When used immediately after an opening brace, negates the character set inside the brace.	**`[^abc]`** matches any single character that is NOT one of a, b or c
$	Signifies the end of a line.	**`^\d\d\d$`** matches any string that is exactly 3 digits long
(?!...)	Negative lookahead. Defines a subexpression that must not be present.	**`(?!.*@example.com$).*`** matches any string that does not end with **`@example.com`** **`(?!alice).*`** matches any string that does not start with **`alice`**
(?<!...)	Negative lookbehind. Defines a subexpression that must not be present.	**`.*(?<!net)`** matches any string that does not end with **`net`**

Note that regex comparisons are not case sensitive.

For an example of regular expression usage, see the CPL examples section.

Supported characters

The VCS supports the following characters when entering text in the CLI and web interface:

- the letters A-Z and a-z
- decimal digits (0-9)
- underscore (_)
- minus sign / hyphen (-)
- equals sign (=)
- plus sign (+)
- at sign (@)
- comma (,)
- period/full stop (.)
- exclamation mark (!)
- spaces
- FindMe account names additionally allow the use of all uppercase and lowercase Unicode characters

The following characters are specifically not allowed:

- tabs
- angle brackets (< and >)
- ampersand (&)
- caret (^)

Note that some specific text fields (including Administrator and user groups) have different restrictions and these are noted in the relevant sections of this guide.

Case sensitivity

Text items entered through the CLI and web interface are case insensitive. The only exceptions are passwords and local administrator account names which are case sensitive.

Call types and licensing

This section describes the different call types recognized by the VCS and how they are licensed.

Call types

The VCS distinguishes between the following types of call:

- **Unified CM remote sessions**: these are "mobile and remote access" calls i.e.video or audio calls from devices located outside the enterprise that are routed via the Expressway firewall traversal solution to endpoints registered to Unified CM. These calls do not consume any type of call license.
- **VCS traversal calls**: these are standard VCS video or audio calls, including business-to-business calls, B2BUA calls (for media encryption or ICE), and interworked or gatewayed calls to third-party solutions where the VCS takes both the call signaling and the call media. Each call consumes a traversal call license.
  Audio-only SIP traversal calls are treated distinctly from video SIP traversal calls. Each traversal call license allows either 1 video call or 2 audio-only SIP calls. Hence, a 100 traversal call license would allow, for example, 90 video and 20 SIP audio-only simultaneous calls. Any other audio-only call (non-traversal, H.323 or interworked) will consume a standard video call license (traversal or non-traversal as appropriate).
- **VCS non-traversal calls**: these are standard VCS video or audio calls where the signaling passes through the VCS but the media goes directly between the endpoints, or between an endpoint and another system in the call route. Each call consumes a non-traversal call license. Note that Lync B2BUA calls are classified as non-traversal calls (even though the media does traverse the VCS).

Both **Unified CM remote sessions** and **VCS traversal calls** consume traversal call resources and each VCS has a maximum limit of 150 concurrent traversal calls (500 calls on Large VM servers).

Each VCS also allows up to 750 concurrent non-traversal calls.

Note that:

- VCS defines an "audio-only" SIP call as one that was negotiated with a single “m=” line in the SDP. Thus, for example, if a person makes a “telephone” call but the SIP UA includes an additional m= line in the SDP, the call will consume a video call license.
- While an "audio-only" SIP call is being established, it is treated (licensed) as a video call. It only becomes licensed as "audio-only" when the call setup has completed. This means that if your system approaches its maximum licensed limit, you may be unable to connect some "audio-only" calls if they are made simultaneously.

What are traversal calls?

A traversal call is any call passing through the VCS that includes both the signaling (information about the call) and media (voice and video). The only other type of call is a non-traversal call, where the signaling passes through the VCS but the media goes directly between the endpoints (or between one endpoint and another VCS in the call route, or between two VCSs in the call route).

A call is “traversal” or “non-traversal” from the point of view of the VCS through which it is being routed at the time. A call between two endpoints may pass through two or more VCSs. Some of these VCSs may just take the signaling, in which case the call will be a non-traversal call for that VCS. Other VCSs in the route may need to take the media as well, and so the call will count as a traversal call on that particular VCS.

The following types of calls require the VCS to take the media. They are classified as traversal calls, require a traversal call license, and always pass through the Traversal Subzone:

- Unified CM remote sessions (these do not require a traversal call license)
- all other firewall traversal calls that are not Unified CM remote sessions, where the local VCS is either the traversal client or traversal server
- calls that are gatewayed (interworked) between H.323 and SIP on the local VCS
- calls that are gatewayed (interworked) between IPv4 and IPv6 on the local VCS
- for a VCS Expressway with Advanced Networking enabled, calls that are inbound from one LAN port and outbound on the other
- a SIP to SIP call when one of the participants is behind a NAT (unless both endpoints are using ICE for NAT traversal)
- calls that invoke the B2BUA to apply a media encryption policy or for ICE messaging support

Note that for calls via the Microsoft Lync B2BUA, the B2BUA application always takes the media but the call is not classified as a VCS traversal call and does not consume a traversal call license (it may still consume a non-traversal license if the VCS takes the call signaling).

Traversal calls use more resource than non-traversal calls, and the numbers of each type of call are licensed separately. The VCS has one license for the maximum number of concurrent traversal calls it can take, and another for the maximum number of concurrent non-traversal calls. You can increase the number of each type of call available on your VCS (or VCS cluster, see License usage within a cluster [p.184] for more information) by purchasing and installing the appropriate option key. While every deployment is different, as a guideline we recommend that your system has a 10:1 ratio of registrations to concurrent call licenses.

Note that a non-traversal call on a VCS Expressway will consume a traversal license if there are no non-traversal call licenses available (in this situation, the call will remain a non-traversal call — the VCS Expressway will not take the media, even though it is using a traversal license).

Alarms

Alarms occur when an event or configuration change has taken place on the VCS that requires some manual administrator intervention, such as a restart. Alarms may also be raised for hardware and environmental issues such as faulty disks and fans or high temperatures.

The **Alarms** page (**Status > Alarms**) provides a list of all the alarms currently in place on your system (and, where applicable, their proposed resolution). When there are unacknowledged alarms in place on the VCS, an alarm icon appears at the top right of all pages. You can also access the **Alarms** page by clicking on the alarm icon.

Each alarm is identified by a 5-digit **Alarm ID**, shown in the rightmost column in the alarms list. The first 2 digits of the **Alarm ID** categorize the alarm as follows:

Alarm ID prefix	Category
10nnn	Hardware issues
15nnn	Software issues
20nnn	Cluster-related issues
25nnn	Network and network services settings
30nnn	Licensing / resources / option keys
35nnn	External applications and services (such as policy services or LDAP/AD configuration)
40nnn	Security issues (such as certificates, passwords or insecure configuration)
45nnn	General VCS configuration issues
55nnn	B2BUA issues

All alarms raised on the VCS are also raised as Cisco TMS tickets. All the attributes of an alarm (its ID, severity and so on) are included in the information sent to Cisco TMS.

List of alarms

The following table lists the alarms that can be raised on the VCS.

ID	Title	Description	Solution	Severity
10001	Hardware failure	<problem description>		Critical
10002	RAID degraded	<problem description>	Follow your Cisco RMA process to obtain replacement parts, and then see 'Cisco UCS C220 Server Installation and Service Guide' for information about how to replace server components.	Critical
10003	PSU redundancy lost	<problem description>	Follow your Cisco RMA process to obtain replacement parts, and then see 'Cisco UCS C220 Server Installation and Service Guide' for information about how to replace server components.	Critical

ID	Title	Description	Solution	Severity
10004	RAID rebuilding	<problem description>	Wait for the rebuild to complete. On successful completion, all RAID-related alarms will be automatically lowered.	Critical
15004	Application failed	An unexpected software error was detected in <module>	View the incident reporting page	Error
15005	Database failure	Please remove database and restore from backup, then reboot the system	Reboot the system	Warning
15007	The system is busy	The system is shutting down, or starting		Alert
15008	Failed to load database	The database failed to load; some configuration data has been lost	Restore system data from backup	Warning
15009	Factory reset started	Factory reset started		Alert
15010	Application failed	An unexpected software error was detected in <module>	View the incident reporting page	Error
15011	Application failed	An unexpected software error was detected in <module>	View the incident reporting page	Error
15012	Language pack mismatch	Some text labels may not be translated	Contact your Cisco representative to see if an up-to-date language pack is available	Warning
15013	Factory reset failed	Factory reset failed		Alert
15014	Restart required	Core dump mode has been changed, however a restart is required for this to take effect	Restart the system	Warning
15015	Maintenance mode	The VCS is in Maintenance mode and will no longer accept calls and registrations		Warning
15016	Directory service database failure	The directory service database is not running	Restart the system	Warning
15017	Application failed	The OpenDS service has stopped unexpectedly and has been restarted	If the problem persists, contact your Cisco representative	Warning
15018	Boot selection mismatch	Booted system does not match expected configuration; this may be caused by user input or spurious characters on the serial console during the boot	Reboot the system	Critical
15019	Application failed	An unexpected software error was detected in <details>	Restart the system; if the problem persists, contact your Cisco support representative	Critical

ID	Title	Description	Solution	Severity
20003	Invalid cluster configuration	The cluster configuration is invalid	Check the Clustering page and ensure that this system's IP address is included and there are no duplicate IP addresses	Warning
20004	Cluster communication failure	The system is unable to communicate with one or more of the cluster peers	Check the clustering configuration	Warning
20005	Invalid peer address	One or more peer addresses are invalid	Check the Clustering page and ensure that all Peer fields use a valid IP address	Warning
20006	Cluster database communication failure	The database is unable to replicate with one or more of the cluster peers	Check the clustering configuration and restart	Warning
20007	Restart required	Cluster configuration has been changed, however a restart is required for this to take effect	Restart the system	Warning
20008	Cluster replication error	Automatic replication of configuration has been temporarily disabled because an upgrade is in progress	Please wait until the upgrade has completed	Warning
20009	Cluster replication error	There was an error during automatic replication of configuration	View cluster replication instructions	Warning
20010	Cluster replication error	The NTP server is not configured	Configure an NTP server	Warning
20011	Cluster replication error	This peer's configuration conflicts with the master's configuration, manual synchronization of configuration is required	View cluster replication instructions	Warning
20012	Cluster replication error	This peer's cluster configuration settings do not match the configuration master peer's settings	Configure this peer's cluster settings	Warning
20014	Cluster replication error	Cannot find master or this peer's configuration file, manual synchronization of configuration is required	View cluster replication instructions	Warning
20015	Cluster replication error	The local VCS does not appear in the list of peers	Check the list of peers for this cluster	Warning
20016	Cluster replication error	The master peer is unreachable	Check the list of peers for this cluster	Warning
20017	Cluster replication error	Configuration master ID is inconsistent, manual synchronization of configuration is required	View cluster replication instructions	Warning

ID	Title	Description	Solution	Severity
20018	Invalid clustering configuration	H.323 mode must be turned On - clustering uses H.323 communications between peers	Configure H.323 mode	Warning
20019	Cluster name not configured	If FindMe or clustering are in use a cluster name must be defined.	Configure the cluster name	Warning
25001	Restart required	Network configuration has been changed, however a restart is required for this to take effect	Restart the system	Warning
25002	Date and time not validated	The system is unable to obtain the correct time and date from an NTP server	Check the time configuration	Warning
25003	IP configuration mismatch	IP protocol is set to both IPv4 and IPv6, but the system does not have any IPv4 addresses defined	Configure IP settings	Warning
25004	IP configuration mismatch	IP protocol is set to both IPv4 and IPv6, but the system does not have an IPv4 gateway defined	Configure IP settings	Warning
25006	Restart required	Advanced Networking option key has been changed, however a restart is required for this to take effect	Configure your required LAN and static NAT settings on the IP page and then restart the system.	Warning
25007	Restart required	QoS settings have been changed, however a restart is required for this to take effect	Restart the system	Warning
25008	Restart required	Port configuration has been changed, however a restart is required for this to take effect	Restart the system	Warning
25009	Restart required	Ethernet configuration has been changed, however a restart is required for this to take effect	Restart the system	Warning
25010	Restart required	IP configuration has been changed, however a restart is required for this to take effect	Restart the system	Warning
25011	Restart required	HTTPS service has been changed, however a restart is required for this to take effect	Restart the system	Warning
25013	IP configuration mismatch	IP protocol is set to both IPv4 and IPv6, but the system does not have an IPv6 gateway defined	Configure IP settings	Warning
25014	Configuration warning	IP protocol is set to both IPv4 and IPv6, but the VCS does not have any IPv6 addresses defined	Configure IP settings	Warning
25015	Restart required	SSH service has been changed, however a restart is required for this to take effect	Restart the system	Warning

ID	Title	Description	Solution	Severity
25016	Ethernet speed not recommended	An Ethernet interface speed setting has been negotiated to a value other than 1000Mb/s full duplex or 100Mb/s full duplex; this may result in packet loss over your network	Configure Ethernet parameters	Warning
25017	Restart required	HTTP service has been changed, however a restart is required for this to take effect	Restart the system	Warning
25018	Port conflict	There is a port conflict between <function> <port> and <function> <port>	Review the port configuration on the Local inbound ports and Local outbound ports pages	Warning
25019	Verbose log levels configured	One or more modules of the Network Log or Support Log are set to a level of Debug or Trace	Network Log and Support Log modules should be set to a level of Info, unless advised otherwise by your Cisco support representative. If diagnostic logging is in progress they will be reset automatically when diagnostic logging is stopped	Warning
25020	NTP client failure	The system is unable to run the NTP client	Check NTP status information, including any key configuration and expiry dates	Warning
25021	NTP server not available	The system is unable to contact an NTP server	Check Time configuration and status; check DNS configuration	Warning
25022	Time not synchronized over traversal zone	The system time of this server is different from that on a server on the other side of a SIP traversal zone	Ensure that your systems have consistent Time configuration; note that any changes may take some time to become effective	Warning
30001	Capacity warning	The number of concurrent traversal calls has approached the licensed limit	Contact your Cisco representative	Warning
30002	Capacity warning	The number of concurrent traversal calls has approached the unit's physical limit	Contact your Cisco representative	Warning
30003	Capacity warning	The number of concurrent non-traversal calls has approached the unit's physical limit	Contact your Cisco representative	Warning
30004	Capacity warning	The number of concurrent non-traversal calls has approached the licensed limit	Contact your Cisco representative	Warning
30005	Capacity warning	TURN relays usage has approached the unit's physical limit	Contact your Cisco representative	Warning
30006	Restart required	The release key has been changed, however a restart is required for this to take effect	Restart the system	Warning
30007	Capacity warning	TURN relays usage has approached the licensed limit	Contact your Cisco representative	Warning

ID	Title	Description	Solution	Severity
30008	Invalid release key	The release key is not valid; if you do not have a valid key, contact your Cisco support representative	Add/Remove option keys	Warning
30009	TURN relays installed	TURN services are only available on VCS Expressway; TURN option key ignored	Add/Remove option keys	Warning
30010	Capacity warning	The number of concurrent registrations has approached the licensed limit	Contact your Cisco representative	Warning
30011	TURN relay licenses required	TURN services are enabled but no TURN relay license option keys are installed	Add option key or disable TURN services	Warning
30012	License usage of lost cluster peer	Cluster peer <n> has been unavailable for more than <n> hours. Its licenses will be removed from the total available for use across the cluster on <date>.	Resolve the issue with this peer, or remove it from the cluster configuration	Warning
30013	License usage of lost cluster peer	Several cluster peers have been unavailable for more than <n> hours. Their licenses will be removed from the total available for use across the cluster as follows: <details>.	Resolve the issue with this peer, or remove it from the cluster configuration	Warning
30014	License usage of lost cluster peer	Cluster peer <n> has been unavailable for more than <n> days. Its licenses will be removed from the total available for use across the cluster on <date>.	Resolve the issue with this peer, or remove it from the cluster configuration	Warning
30015	License usage of lost cluster peer	Several cluster peers have been unavailable for more than <n> days. Their licenses will be removed from the total available for use across the cluster as follows: <details>.	Resolve the issue with this peer, or remove it from the cluster configuration	Warning
30016	Licenses of lost cluster peer have been taken off the license pool	Cluster peer <n> has been unavailable for more than <n> days. Its licenses have been removed from the total available for use across the cluster on <date>.	Resolve the issue with this peer, or remove it from the cluster configuration	Warning
30017	Licenses of lost cluster peer have been taken off the license pool	Several cluster peers have been unavailable for more than <n> days. Their licenses have been removed from the total available for use across the cluster as follows: <details>.	Resolve the issue with this peer, or remove it from the cluster configuration	Warning
30018	Provisioning licenses limit reached	The number of concurrently provisioned devices has reached the licensed limit	Provisioning limits are set by Cisco TMS; contact your Cisco representative if you require more licenses	Warning

ID	Title	Description	Solution	Severity
30019	Call license limit reached	You have reached your license limit of <n> concurrent non-traversal call licenses	If the problem persists, contact your Cisco representative to buy more call licenses	Warning
30020	Call license limit reached	You have reached your license limit of <n> concurrent traversal call licenses	If the problem persists, contact your Cisco representative to buy more call licenses	Warning
30021	TURN relay license limit reached	You have reached your license limit of <n> concurrent TURN relay licenses	If the problem persists, contact your Cisco representative to buy more TURN relay licenses	Warning
30022	Call capacity limit reached	The number of concurrent non-traversal calls has reached the unit's physical limit	Ensure that your registrations are distributed evenly across all peers	Warning
30023	Call capacity limit reached	The number of concurrent traversal calls has reached the unit's physical limit	Ensure that your registrations are distributed evenly across all peers	Warning
30024	TURN relay capacity limit reached	The number of concurrent TURN relay calls has reached the unit's physical limit	Ensure that your registrations are distributed evenly across all peers	Warning
30025	Restart required	An option key has been changed, however a restart is required for this to take effect	Restart the system	Warning
35001	Configuration warning	Active Directory mode has been enabled but the DNS hostname has not been configured	Configure DNS hostname	Warning
35002	Configuration warning	Active Directory mode has been enabled but the NTP server has not been configured	Configure NTP server	Warning
35003	Configuration warning	Active Directory mode has been enabled but no DNS servers have been configured	Configure a DNS server	Warning
35004	LDAP configuration required	Remote login authentication is in use for administrator or FindMe accounts but a valid LDAP Server address, Port, Bind_DN and Base_ DN have not been configured	Configure LDAP parameters	Warning
35005	Configuration warning	Active Directory mode has been enabled but a domain has not been configured	Configure domain on Active Directory Service page	Warning
35007	Configuration warning	Active Directory SPNEGO disabled; you are recommended to enable the SPNEGO setting	Enable SPNEGO	Warning
35008	Configuration warning	Active Directory mode has been enabled but a workgroup has not been configured	Configure workgroup on Active Directory Service page	Warning

ID	Title	Description	Solution	Severity
35009	TMS Provisioning Extension services communication failure	The VCS is unable to communicate with the TMS Provisioning Extension services. Phone book service failures can also occur if TMS does not have any users provisioned against this cluster.	Go to the TMS Provisioning Extension service status page and select the failed service to view details about the problem	Warning
35010	TMS Provisioning Extension services data import failure	An import from the TMS Provisioning Extension services has been canceled as it would cause the VCS to exceed internal table limits	See the VCS Event Log for details, then check the corresponding data within TMS; you must perform a full synchronization after the data has been corrected in TMS	Warning
35011	TMS Provisioning Extension services data import failure	One or more records imported from the TMS Provisioning Extension services have been dropped due to unrecognized data format	See the VCS Event Log for details, then check the corresponding data within TMS; you must perform a full synchronization after the data has been corrected in TMS	Warning
35012	Failed to connect to LDAP server	Failed to connect to the LDAP server for H.350 device authentication	Ensure that your H.350 directory service is correctly configured	Warning
35013	Unified Communications SSH tunnel failure	This system cannot communicate with one or more remote hosts	Review the Event Log and check that the traversal zone between the VCS Control and the VCS Expressway is active	Warning
35014	Unified Communications SSH tunnel notification failure	This system cannot communicate with one or more remote hosts	Ensure that your firewall allows traffic from the VCS Control ephemeral ports to 2222 TCP on the VCS Expressway	Warning
35015	Unified CM port conflict	There is a port conflict on Unified CM <name> between neighbor zone <name> and Unified Communications (both are using port <number>)	The same port on Unified CM cannot be used for line side (Unified Communications) and SIP trunk traffic. Review the port configuration on Unified CM and reconfigure the <zone> if necessary	Warning
40001	Security alert	No CRL distribution points have been defined for automatic updates	Check CRL configuration	Warning
40002	Security alert	Automatic updating of CRL files has failed	If the problem persists, contact your Cisco representative	Warning
40003	Insecure password in use	The root user has the default password set	View instructions on changing the root password	Warning
40004	Certificate-based authentication required	Your system is recommended to have client certificate-based security set to *Certificate-based authentication* when in advanced account security mode	Configure client certificate-based security	Warning
40005	Insecure password in use	The admin user has the default password set	Change the admin password	Error

ID	Title	Description	Solution	Severity
40006	Security alert	Unable to download CRL update	Check CRL distribution points and the Event Log	Warning
40007	Security alert	Failed to find configuration file for CRL automatic updates	If the problem persists, contact your Cisco representative	Warning
40008	Security alert	The SSH service is using the default key	View instructions on replacing the default SSH key	Warning
40009	Restart required	HTTPS client certificates validation mode has changed, however a restart is required for this to take effect	Restart the system	Warning
40011	Per-account session limit required	A non-zero per-account session limit is required when in advanced account security mode	Configure per-account session limit	Warning
40012	External manager connection is using HTTP	You are recommended to use HTTPS connections to the external manger when in advanced account security mode	Configure external manager	Warning
40013	HTTPS client certificate validation disabled	You are recommended to enable client side certificate validation for HTTPS connections when in advanced account security mode	Configure HTTPS client certificate validation	Warning
40014	Time out period required	A non-zero system session time out period is required when in advanced account security mode	Configure session time out period	Warning
40015	System session limit required	A non-zero system session limit is required when in advanced account security mode	Configure system session limit	Warning
40016	Encryption required	Your login account LDAP server configuration is recommended to have encryption set to *TLS* when in advanced account security mode	Configure login account LDAP server	Warning
40017	Incident reporting enabled	You are recommended to disable incident reporting when in advanced account security mode	Configure incident reporting	Warning
40018	Insecure password in use	One or more users has a non-strict password		Warning
40019	External manager has certificate checking disabled	You are recommended to enable external manager certificate checking when in advanced account security mode	Configure external manager	Warning
40020	Security alert	The connection to the Active Directory Service is not using TLS encryption	Configure Active Directory Service connection settings	Warning

ID	Title	Description	Solution	Severity
40021	Remote logging enabled	You are recommended to disable the remote syslog server when in advanced account security mode	Configure remote logging	Warning
40022	Security alert	Active Directory secure channel disabled; you are recommended to enable the secure channel setting	Enable secure channel	Warning
40024	CRL checking required	Your login account LDAP server configuration is recommended to have certificate revocation list (CRL) checking set to *All* when in advanced account security mode	Configure login account LDAP server	Warning
40025	SNMP enabled	You are recommended to disable SNMP when in advanced account security mode	Configure SNMP mode	Warning
40026	Reboot required	The advanced account security mode has changed, however a reboot is required for this to take effect	Reboot the VCS	Warning
40027	Security alert	The connection to the TMS Provisioning Extension services is not using TLS encryption	Configure TMS Provisioning Extension services connection settings	Warning
40028	Insecure password in use	The root user's password is hashed using MD5, which is not secure enough	View instructions on changing the root password	Warning
40029	LDAP server CA certificate is missing	A valid CA certificate for the LDAP database has not been uploaded; this is required for connections via TLS	Upload a valid CA certificate	Warning
40030	Security alert	Firewall rules activation failed; the firewall configuration contains at least one rejected rule	Check your firewall rules configuration, fix any rejected rules and re-try the activation	Warning
40031	Security alert	Unable to restore previous firewall configuration	Check your firewall rules configuration, fix any rejected rules, activate and accept the rules; if the problem persists, contact your Cisco representative	Warning
40032	Security alert	Unable to initialize firewall	Restart the system; if the problem persists, contact your Cisco representative	Warning
40033	Configuration warning	The Default Zone access rules are enabled, but leaving SIP over UDP or SIP over TCP enabled offers a way to circumvent this security feature	Either disable UDP and TCP on the SIP page to enforce certificate identity checking using TLS, or disable the access rules for the Default Zone.	Warning

ID	Title	Description	Solution	Severity
40034	Security alert	Firewall rules activation failed; the firewall configuration contains rules with duplicated priorities	Check your firewall rules configuration, ensure all rules have a unique priority and re-try the activation	Warning
40036	Delegated credential checking error	The traversal server zone associated with SIP domain <domain> cannot connect to the traversal client system	Check that the domain and its associated traversal server zone are configured correctly. You may also need to check the remote traversal client system	Warning
40037	Delegated credential checking error	There is a communication problem with the traversal client zone <zone> used to receive delegated credential checking requests	Check that the traversal client zone is configured correctly. You may also need to check the remote traversal server system	Warning
40038	Delegated credential checking configuration error	TLS verify mode is not enabled on the traversal server zone associated with SIP domain <domain>	Check the domain and ensure that TLS verify mode is enabled on the associated traversal server zone	Warning
40039	Delegated credential checking configuration error	TLS verify mode is not enabled on the traversal client zone (<zone>) that has been configured to accept delegated authentication requests	Ensure that TLS verify mode is enabled on the traversal client zone	Warning
40040	Unified Communications configuration error	TLS verify mode is not enabled on a traversal zone configured for Unified Communications services	Ensure that TLS verify mode is enabled on the traversal zone; you may also need to check the remote traversal system	Warning
40041	Security alert	Automated intrusion protection rules are not available	Disable and then re-enable the failed services	Warning
40042	FIPS140-2 compliance restriction	Some SIP configuration is not using TLS transport; FIPS140-2 compliance requires TLS	Ensure that TLS is the only enabled system-wide SIP transport mode on the SIP page, and that all zones are using TLS. Alternatively, if you are transitioning into FIPS140-2 you may want to restore a FIPS-compliant backup of your data.	Warning
40043	Unified Communications configuration error	Media encryption is not enforced on a traversal zone configured for Unified Communications services	Ensure that media encryption is set to 'Force encrypted' on the traversal zone	Warning
40044	System reset required	FIPS140-2 mode has been enabled; a system reset is required to complete this process	Ensure that all alarms are cleared, then take a system backup before performing a system reset	Warning
40045	Restart required	FIPS140-2 mode has been disabled; a system restart is required to complete this process	Restart the system	Warning

ID	Title	Description	Solution	Severity
40046	FIPS140-2 compliance restriction	Clustered systems are not FIPS140-2 compliant	Disband the cluster	Warning
40048	Unified Communications configuration error	Unified Communications services are enabled but SIP TLS is disabled	Ensure that SIP TLS mode is set to 'On' on SIP configuration page	Warning
40100	Security alert	Firewall rules are not synchronized with network interfaces	Restart the system; if the problem persists, contact your Cisco representative	Warning
45001	Failed to load Call Policy file	<failure details>	Configure Call Policy	Warning
45002	Configuration warning	Expected default link between the Default Subzone and the Default Zone is missing	Configure default links	Warning
45003	Configuration warning	H.323 and SIP modes are set to Off; one or both of them should be enabled	Configure H.323 and/or SIP modes	Warning
45004	Configuration conflict	The FindMe mode is set to *On* or *Remote service* but the FindMe option key has been deleted	Reconfigure FindMe mode or reinstall the option key	Warning
45005	Configuration conflict	H323-SIP Protocol Interworking mode is set to *Registered only* but the H323-SIP Interworking Gateway option key has been deleted	Reconfigure Interworking mode or reinstall the option key	Warning
45006	Configuration warning	Expected default link between the Default Subzone and the Cluster Subzone is missing	Configure default links	Warning
45007	Configuration warning	Expected default link between the Default Subzone and the Traversal Subzone is missing	Configure default links	Warning
45008	Configuration warning	Expected default link between the Traversal Subzone and the Default Zone is missing	Configure default links	Warning
45009	Configuration warning	For provisioning to work correctly, authentication policy must be enabled on the Default Zone and any other relevant zone that receives provisioning requests	Set authentication policy to either 'Check credentials' or 'Treat as authenticated' for each relevant zone	Warning
45012	Configuration warning	For Presence services to work correctly, authentication policy must be enabled on the Default Subzone and any other relevant subzone; authentication must also be enabled on the Default Zone if the endpoints are not registered	Set authentication policy to either “Check credentials” or “Treat as authenticated” for the Default Subzone and each relevant subzone and zone	Warning

ID	Title	Description	Solution	Severity
45013	Configuration warning	For phone book requests to work correctly, authentication policy must be enabled on the Default Subzone and any other relevant subzone; authentication must also be enabled on the Default Zone if the endpoints are not registered	Set authentication policy to either “Check credentials” or “Treat as authenticated” for the Default Subzone and each relevant subzone and zone	Warning
45014	Configuration warning	H.323 is enabled in a zone with a SIP media encryption mode of "Force encrypted" or "Force unencrypted"	On the relevant zone, either disable H.323 or select a different SIP media encryption mode	Warning
45016	Configuration warning	A zone has a SIP media encryption mode of "Best effort" or "Force encrypted" but the transport is not TLS. TLS is required for encryption.	On the relevant zone, either set the SIP transport to TLS or select a different SIP media encryption mode	Warning
45017	Configuration warning	A subzone has a SIP media encryption mode of "Best effort" or "Force encrypted" but TLS is not enabled. TLS is required for encryption.	Either enable TLS on the SIP configuration page or select a different SIP media encryption mode for the relevant subzone or Default Subzone	Warning
45018	Configuration warning	DNS zones (including <zone_ name>) have their SIP default transport protocol set to <protocol>, but that protocol is disabled system-wide.	Check that the SIP default transport protocol for the DNS zone and the system-wide SIP transport settings are consistent	Warning
45019	Insufficient media ports	There is an insufficient number of media ports to support the number of licensed calls	Increase the media port range	Warning
55001	B2BUA service restart required	Some B2BUA service specific configuration has changed, however a restart is required for this to take effect	Restart the B2BUA service	Warning
55002	B2BUA misconfiguration	The port on B2BUA for VCS communications is misconfigured	Check B2BUA configuration (advanced settings)	Warning
55003	B2BUA misconfiguration	Invalid trusted host IP address of Lync device	Check configured addresses of trusted hosts	Warning
55004	B2BUA misconfiguration	The port on B2BUA for Lync communications is misconfigured	Check B2BUA configuration (advanced settings)	Warning
55005	B2BUA misconfiguration	The Lync signaling destination address is misconfigured	Check B2BUA configuration	Warning
55005	B2BUA misconfiguration	The Lync signaling destination address is misconfigured	Check B2BUA configuration	Warning
55006	B2BUA misconfiguration	The Lync signaling destination port is misconfigured	Check B2BUA configuration	Warning
55007	B2BUA misconfiguration	The Lync transport type is misconfigured	Check B2BUA configuration	Warning

ID	Title	Description	Solution	Severity
55008	B2BUA misconfiguration	Missing or invalid FQDN of service	Check the VCS's system host name and domain name	Warning
55009	B2BUA misconfiguration	Invalid IP address of service	Check the VCS's LAN 1 IPv4 address	Warning
55010	B2BUA misconfiguration	The B2BUA media port range end value is misconfigured	Check B2BUA configuration (advanced settings)	Warning
55011	B2BUA misconfiguration	The B2BUA media port range start value is misconfigured	Check B2BUA configuration (advanced settings)	Warning
55012	B2BUA misconfiguration	Invalid Microsoft Lync B2BUA mode	Check B2BUA configuration	Warning
55013	B2BUA misconfiguration	Invalid option key	Check option keys	Warning
55014	B2BUA misconfiguration	Invalid hop count	Check B2BUA configuration (advanced settings)	Warning
55015	B2BUA misconfiguration	Invalid trusted host IP address of transcoder	Check configured addresses of trusted hosts	Warning
55016	B2BUA misconfiguration	The setting to enable transcoders for this B2BUA is misconfigured	Check B2BUA configuration (transcoder settings)	Warning
55017	B2BUA misconfiguration	The port on B2BUA for transcoder communications is misconfigured	Check B2BUA configuration (transcoder settings)	Warning
55018	B2BUA misconfiguration	Transcoder address and/or port details are misconfigured	Check B2BUA configuration (transcoder settings) and the configured addresses of trusted hosts	Warning
55019	B2BUA misconfiguration	Invalid TURN server address	Check B2BUA configuration (TURN settings)	Warning
55021	B2BUA misconfiguration	The setting to offer TURN services for this B2BUA is misconfigured	Check B2BUA configuration (TURN settings)	Warning
55023	B2BUA misconfiguration	The transcoder policy rules are misconfigured	Check transcoder policy rules configuration	Warning
55024	B2BUA misconfiguration	The setting to use transcoder policy rules is misconfigured	Check B2BUA configuration (transcoder settings)	Warning
55025	B2BUA misconfiguration	The B2BUA has been enabled to use transcoders, but there are no transcoders configured	Configure one or more transcoders	Warning
55026	B2BUA misconfiguration	TURN services are enabled, but there are no valid TURN servers configured	Configure the TURN server address	Warning
55028	B2BUA misconfiguration	The start and end media port ranges are misconfigured	Check the B2BUA media port range settings	Warning
55029	B2BUA misconfiguration	The media port ranges used by the B2BUA overlap with the media port ranges used by <module>	Check the port configuration for both services	Warning

ID	Title	Description	Solution	Severity
55030	B2BUA misconfiguration	The port used by the B2BUA for VCS communications is also used by <module>	Check the port configuration for both services	Warning
55031	B2BUA misconfiguration	The port used by the B2BUA for Lync communications is also used by <module>	Check the port configuration for both services	Warning
55032	B2BUA misconfiguration	The port used by the B2BUA for transcoder communications is also used by <module>	Check the port configuration for both services	Warning
55033	B2BUA misconfiguration	No valid Lync trusted host devices have been configured	Configure at least one Lync trusted host device	Warning
55034	B2BUA misconfiguration	No valid transcoder trusted hosts have been configured	Configure at least one transcoder trusted host	Warning
55035	B2BUA connectivity problem	The B2BUA cannot connect to the transcoders	Restart the B2BUA service	Warning
55036	B2BUA connectivity problem	The B2BUA cannot connect to the VCS	Restart the B2BUA service	Warning
55037	B2BUA connectivity problem	The B2BUA cannot connect to Lync	Check the Lync B2BUA status page for more information about the problem; you will then need to restart the B2BUA service after making any configuration changes	Warning
55101	B2BUA misconfiguration	Invalid VCS authorized host IP address	Restart the service; contact your Cisco representative if the problem persists	Warning
55102	B2BUA misconfiguration	Invalid URI format of VCS contact address	Restart the service; contact your Cisco representative if the problem persists	Warning
55103	B2BUA misconfiguration	Invalid VCS encryption mode	Restart the service; contact your Cisco representative if the problem persists	Warning
55104	B2BUA misconfiguration	Invalid VCS ICE mode	Restart the service; contact your Cisco representative if the problem persists	Warning
55105	B2BUA misconfiguration	Invalid VCS next hop host configuration	Restart the service; contact your Cisco representative if the problem persists	Warning
55106	B2BUA misconfiguration	Invalid VCS next hop liveness mode	Restart the service; contact your Cisco representative if the problem persists	Warning
55107	B2BUA misconfiguration	Invalid VCS next hop mode	Restart the service; contact your Cisco representative if the problem persists	Warning

ID	Title	Description	Solution	Severity
55108	B2BUA misconfiguration	Invalid VCS next hop port	Restart the service; contact your Cisco representative if the problem persists	Warning
55109	B2BUA misconfiguration	Invalid VCS transport type	Restart the service; contact your Cisco representative if the problem persists	Warning
55110	B2BUA misconfiguration	Invalid URI format of B side contact address	Restart the service; contact your Cisco representative if the problem persists	Warning
55111	B2BUA misconfiguration	Invalid B side encryption mode	Restart the service; contact your Cisco representative if the problem persists	Warning
55112	B2BUA misconfiguration	Invalid B side ICE mode	Restart the service; contact your Cisco representative if the problem persists	Warning
55113	B2BUA misconfiguration	Invalid B side next hop liveness mode	Restart the service; contact your Cisco representative if the problem persists	Warning
55114	B2BUA misconfiguration	Invalid B side next hop mode	Restart the service; contact your Cisco representative if the problem persists	Warning
55115	B2BUA misconfiguration	Invalid command listening port	Restart the service; contact your Cisco representative if the problem persists	Warning
55116	B2BUA misconfiguration	Invalid debug status path	Restart the service; contact your Cisco representative if the problem persists	Warning
55117	B2BUA misconfiguration	Invalid service	Restart the service; contact your Cisco representative if the problem persists	Warning
55118	B2BUA misconfiguration	Invalid software string	Restart the service; contact your Cisco representative if the problem persists	Warning
55119	B2BUA misconfiguration	Invalid URI format of transcoding service contact address	Restart the service; contact your Cisco representative if the problem persists	Warning
55120	B2BUA misconfiguration	Invalid transcoding service encryption mode	Restart the service; contact your Cisco representative if the problem persists	Warning
55121	B2BUA misconfiguration	Invalid transcoding service ICE mode	Restart the service; contact your Cisco representative if the problem persists	Warning
55122	B2BUA misconfiguration	Invalid transcoding service next hop liveness mode	Restart the service; contact your Cisco representative if the problem persists	Warning

ID	Title	Description	Solution	Severity
55123	B2BUA misconfiguration	The transcoding service transport type is misconfigured	Restart the service; contact your Cisco representative if the problem persists	Warning
55124	B2BUA misconfiguration	The mandatory TURN server setting is misconfigured	Restart the service; contact your Cisco representative if the problem persists	Warning
55125	B2BUA misconfiguration	Invalid VCS next hop host configuration	Restart the service; contact your Cisco representative if the problem persists	Warning
55126	B2BUA misconfiguration	Invalid VCS authorized host IP address	Restart the service; contact your Cisco representative if the problem persists	Warning
55127	B2BUA misconfiguration	Cannot start B2BUA application because FQDN configuration is missing	Configure the **System host name** and **Domain name** on the DNS page, and then restart the B2BUA service	Warning
55128	B2BUA misconfiguration	Cannot start B2BUA application because IPv4 interface address configuration is missing	Configure the LAN 1 IPv4 address on the IP page, and then restart the B2BUA service	Warning
55129	B2BUA misconfiguration	Cannot start B2BUA application because cluster name configuration is missing	Configure the cluster name on the Clustering page	Warning
55130	B2BUA misconfiguration	Invalid cluster name	Check the cluster name and then restart the B2BUA service	Warning
55131	B2BUA misconfiguration	Invalid session refresh interval	Check B2BUA configuration (advanced settings), then restart the B2BUA service	Warning
55132	B2BUA misconfiguration	Invalid call resource limit	Restart the service; contact your Cisco representative if the problem persists	Warning
55133	B2BUA misconfiguration	The B2BUA session refresh interval is smaller than the minimum session refresh interval	Check both settings on the B2BUA configuration (advanced settings) and then restart the B2BUA service	Warning
55134	B2BUA misconfiguration	Invalid minimum session refresh interval	Check B2BUA configuration (advanced settings), then restart the B2BUA service	Warning
55135	B2BUA configuration warning	A large number of Lync trusted host devices have been configured; this may impact performance, or in extreme cases it may prevent calls from accessing enough network resources to connect	Review your network topology and try lowering the number of trusted host devices on the B2BUA trusted hosts page.	Warning

Command reference — xConfiguration

The **xConfiguration** group of commands are used to set and change individual items of configuration. Each command is made up of a main element followed by one or more sub-elements.

To obtain information about existing configuration, type:

- **xConfiguration** to return all current configuration settings
- **xConfiguration <element>** to return configuration for that element and all its sub-elements
- **xConfiguration <element> <subelement>** to return configuration for that sub-element

To obtain information about using each of the **xConfiguration** commands, type:

- **xConfiguration ?** to return a list of all elements available under the **xConfiguration** command
- **xConfiguration ??** to return a list of all elements available under the **xConfiguration** command, along with the valuespace, description and default values for each element
- **xConfiguration <element> ?** to return all available sub-elements and their valuespace, description and default values
- **xConfiguration <element> <sub-element> ?** to return all available sub-elements and their valuespace, description and default values

To set a configuration item, type the command as shown. The valid values for each command are indicated in the angle brackets following each command, using the following notation:

Format	Meaning
<0..63>	Indicates an integer value is required. The numbers indicate the minimum and maximum value. In this example the value must be in the range 0 to 63.
<S: 7,15>	An **S** indicates a string value, to be enclosed in quotation marks, is required. The numbers indicate the minimum and maximum number of characters for the string. In this example the string must be between 7 and 15 characters long.
<Off/Direct/Indirect>	Lists the set of valid values. Do not enclose the value in quotation marks.
[1..50]	Square brackets indicate that you can configure more than one of this particular item. Each item is assigned an index within the range shown. For example **IP Route [1..50] Address <S: 0,39>** means that up to 50 IP routes can be specified with each route requiring an address of up to 39 characters in length.

xConfiguration commands

All of the available **xConfiguration** commands are listed in the table below:

Administration CallDetailRecords Mode: <On/Off>

Controls whether the system maintains a local log of Call Detail Records. Default: Off.

On: the system will keep the last 7 days of call usage data.

Off: no call usage data is kept.

Example: **xConfiguration Administration CallDetailRecords Mode: On**

Administration HTTP Mode: <On/Off>

Determines whether HTTP calls will be redirected to the HTTPS port. You must restart the system for any changes to take effect. Default: On.

On: calls will be redirected to HTTPS.

Off: no HTTP access will be available.

Example: `xConfiguration Administration HTTP Mode: On`

Administration HTTPS Mode: <On/Off>

Determines whether the VCS can be accessed via the web interface. This must be On to enable both web interface and TMS access. You must restart the system for any changes to take effect. Default: On.

Example: `xConfiguration Administration HTTPS Mode: On`

Administration LCDPanel Mode: <On/Off>

Controls whether the LCD panel on the front of the VCS identifies the system. Default: On.

On: the system name and first active IP address are shown.

Off: the LCD panel reveals no identifying information about the system.

Example: `xConfiguration Administration LCDPanel Mode: On`

Administration SSH Mode: <On/Off>

Determines whether the VCS can be accessed via SSH and SCP. You must restart the system for any changes to take effect. Default: On.

Example: `xConfiguration Administration SSH Mode: On`

Alternates Cluster Name: <S: 0,128>

The fully qualified domain name used in SRV records that address this VCS cluster, for example "cluster1.example.com". The name can only contain letters, digits, hyphens and underscores.

Warning: if you change the cluster name after any user accounts have been configured on this VCS, you may need to reconfigure your user accounts to use the new cluster name.

Example: `xConfiguration Alternates Cluster Name: "Regional"`

Alternates ConfigurationMaster: <1..6>

Specifies which peer in this cluster is the master, from which configuration will be replicated to all other peers. A cluster consists of up to 6 peers, including the local VCS.

Example: `xConfiguration Alternates ConfigurationMaster: 1`

Alternates Peer [1..6] Address: <S: 0, 128>

Specifies the IP address of one of the peers in the cluster to which this VCS belongs. A cluster consists of up to 6 peers, including the local VCS. This must be a valid IPv4 or IPv6 address.

Example: `xConfiguration Alternates 1 Peer Address: "10.13.0.2"`

Applications ConferenceFactory Alias: <S:0,60>

The alias that will be dialed by the endpoints when the Multiway feature is activated. This must be pre-configured on all endpoints that may be used to initiate the Multiway feature.

Example: `xConfiguration Applications ConferenceFactory Alias: "multiway@example.com"`

Applications ConferenceFactory Mode: <On/Off>

The Mode option allows you to enable or disable the Conference Factory application. Default: Off.

Example: `xConfiguration Applications ConferenceFactory Mode: Off`

Applications ConferenceFactory Range End: <1..65535>

The last number of the range that replaces %% in the template used to generate a conference alias. Default: 65535.

Example: `xConfiguration Applications ConferenceFactory Range End: 30000`

Applications ConferenceFactory Range Start: <1..65535>

The first number of the range that replaces %% in the template used to generate a conference alias. Default: 65535.

Example: `xConfiguration Applications ConferenceFactory Range Start: 10000`

Applications ConferenceFactory Template: <S:0,60>

The alias that the VCS will tell the endpoint to dial in order to create a Multiway conference on the MCU. This alias must route to the MCU as a fully-qualified SIP alias

Example: `Applications ConferenceFactory Template: "563%%@example.com"`

Applications External Status [1..10] Filename: <S:0,255>

XML file containing status that is to be attached for an external application.

Example: `xConfiguration Applications External Status 1 Filename: "foo.xml"`

Applications External Status [1..10] Name: <S:0,64>

Descriptive name for the external application whose status is being referenced.

Example: `xConfiguration Applications External Status 1 Name: "foo"`

Applications Presence Server Mode: <On/Off>

Enables and disables the SIMPLE Presence Server. SIP must also be enabled for the Presence Server to function. Default: Off.

Example: `xConfiguration Applications Presence Server Mode: On`

Applications Presence Server Publication ExpireDelta: <30..7200>

Specifies the maximum time (in seconds) within which a publisher must refresh its publication.

Default: 1800

Example: `xConfiguration Applications Presence Server Publication ExpireDelta: 1800`

Applications Presence Server Subscription ExpireDelta: <30..7200>

Specifies the maximum time (in seconds) within which a subscriber must refresh its subscription. Default: 3600.

Example: `xConfiguration Applications Presence Server Subscription ExpireDelta: 3600`

Applications Presence User Agent ExpireDelta: <1..65534>

Specifies the lifetime value (in seconds) the Presence User Agent will advertise in the PUBLISH messages it sends to the Presence Server. The Presence User Agent will refresh its PUBLISH messages at 75% of this value (to keep them active). The Presence Server may reduce this value in its responses.

Default: 3600

Example: `xConfiguration Applications Presence User Agent ExpireDelta: 3600`

Applications Presence User Agent Mode: <On/Off>

Enables and disables the SIMPLE Presence User Agent (PUA). The PUA provides presence information on behalf of registered endpoints. SIP mode must also be enabled for the PUA to function. Default: Off.

Example: `xConfiguration Applications Presence User Agent Mode: Off`

Applications Presence User Agent Presentity Idle Status: <Offline/Online>

Default presentity status published by the Presence User Agent. Default: Online.

Online: publish registered endpoints as online.

Offline: publish registered endpoints as offline.

Example: `xConfiguration Applications Presence User Agent Presentity Idle Status: Online`

Applications Presence User Agent RetryDelta: <1..65534>

Specifies the time (in seconds) after which the Presence User Agent will attempt to resend a PUBLISH to the Presence Server. This will occur if the original attempt failed due to resource issues or other transitory errors. Default: 1800.

Example: `xConfiguration Applications Presence User Agent RetryDelta: 1800`

Authentication ADS ADDomain: <S: 0,255>

The Kerberos realm used when the VCS joins the AD domain. Note: this field is case sensitive.

Example: **`xConfiguration Authentication ADS ADDomain: "CORPORATION.INT"`**

Authentication ADS Clockskew: <1..65535>

Maximum allowed clockskew between the VCS and the KDC before the Kerberos message is assumed to be invalid (in seconds). Default: 300.

Example: **`xConfiguration Authentication ADS Clockskew: 300`**

Authentication ADS DC [1..5] Address: <S: 0,39>

The address of a domain controller that can be used when the VCS joins the AD domain. Not specifying a specific AD will result the use of DNS SRV queries to find an AD.

Example: **`xConfiguration Authentication ADS DC 1 Address: "192.168.0.0"`**

Authentication ADS Encryption: <Off/TLS>

Sets the encryption to use for the LDAP connection to the ADS server. Default: TLS.

Off: no encryption is used.

TLS: TLS encryption is used.

Example: **`xConfiguration Authentication ADS Encryption: TLS`**

Authentication ADS KDC [1..5] Address: <S: 0,39>

The address of a Kerberos Distribution Center (KDC) to be used when connected to the AD domain. Not specifying a specific KDC will result in the use of DNS SRV queries to find a KDC.

Example: **`xConfiguration Authentication ADS KDC 1 Address: "192.168.0.0"`**

Authentication ADS KDC [1..5] Port: <1..65534>

Specifies the port of a KDC that can be used when the VCS joins the AD domain. Default: 88.

Example: **`xConfiguration Authentication ADS KDC 1 Port: 88`**

Authentication ADS MachineName: <S: 0..15>

This overides the default NETBIOS machine name used when the VCS joins the AD domain.

Example: **`xConfiguration Authentication ADS MachineName: "short_name"`**

Authentication ADS MachinePassword Refresh: <On/Off>

Determines if this samba client should refresh its machine password every 7 days, when joined to the AD domain. Default: On.

Example: **`xConfiguration Authentication ADS MachinePassword Refresh: On`**

Authentication ADS Mode: <On/Off>

Indicates if the VCS should attempt to form a relationship with the AD. Default: Off.

Example: **`xConfiguration Authentication ADS Mode: On`**

Authentication ADS SPNEGO: <Enabled/Disabled>

Indicates if SPNEGO (Simple and Protected GSSAPI Negotiation Mechanism) is used when the client (the VCS) authenticates with the server (the AD domain controller). Default: Enabled.

Example: **`xConfiguration Authentication ADS SPNEGO: Enabled`**

Authentication ADS SecureChannel: <Auto/Enabled/Disabled>

Indicates if data transmitted from the VCS to an AD domain controller is sent over a secure channel. Default: Auto.

Example: **`xConfiguration Authentication ADS SecureChannel: Auto`**

Authentication ADS Workgroup: <S: 0,15>

The workgroup used when the VCS joins the AD domain.

Example: `xConfiguration Authentication ADS Workgroup: "corporation"`

Authentication Account Admin Account [1..n] AccessAPI: <On/Off>

Determines whether this account is allowed to access the system's status and configuration via the Application Programming Interface (API). Default: On.

Example: `xConfiguration Authentication Account Admin Account 1 AccessAPI: On`

Authentication Account Admin Account [1..n] AccessWeb: <On/Off>

Determines whether this account is allowed to log in to the system using the web interface. Default: On.

Example: `xConfiguration Authentication Account Admin Account 1 AccessWeb: On`

Authentication Account Admin Account [1..n] Enabled: <On/Off>

Indicates if the account is enabled or disabled. Access will be denied to disabled accounts. Default: On.

Example: `xConfiguration Authentication Account Admin Account 1 Enabled: On`

Authentication Account Admin Account [1..n] Name: <S: 0, 128>

The username for the administrator account.

Example: `xConfiguration Authentication Account Admin Account 1 Name: "bob_smith"`

Authentication Account Admin Account [1..n] Password: <Password>

The password that this administrator will use to log in to the VCS.

Example: `xConfiguration Authentication Account Admin Account 1 Password: "abcXYZ_123"`

Authentication Account Admin Group [1..n] AccessAPI: <On/Off>

Determines whether members of this group are allowed to access the system's status and configuration using the Application Programming Interface (API). Default: On.

Example: `xConfiguration Authentication Account Admin Group 1 AccessAPI: On`

Authentication Account Admin Group [1..n] AccessWeb: <On/Off>

Determines whether members of this group are allowed to log in to the system using the web interface. Default: On.

Example: `xConfiguration Authentication Account Admin Group 1 AccessWeb: On`

Authentication Account Admin Group [1..n] Enabled: <On/Off>

Indicates if the group is enabled or disabled. Access will be denied to members of disabled groups. Default: On.

Example: `xConfiguration Authentication Account Admin Group 1 Enabled: On`

Authentication Account Admin Group [1..n] Name: <S: 0, 128>

The name of the administrator group.

Example: `xConfiguration Authentication Account Admin Group 1 Name: "administrators"`

Authentication Certificate Crlcheck: <None/Peer/All>

Specifies whether HTTPS client certificates are checked against certificate revocation lists (CRLs). CRL data is uploaded to the VCS via the CRL management page. Default: All.

None: no CRL checking is performed.

Peer: only the CRL associated with the CA that issued the client's certificate is checked.

All: all CRLs in the trusted certificate chain of the CA that issued the client's certificate are checked.

Example: `xConfiguration Authentication Certificate Crlcheck: All`

Authentication Certificate Crlinaccessible: <Ignore/Fail>

Controls the revocation list checking behavior if the revocation status cannot be established, for example if the revocation source cannot be contacted or no appropriate revocation list is present. Default: Ignore.

Ignore: treat the certificate as not revoked.

Fail: treat the certificate as revoked (and thus do not allow the TLS connection).

Example: **xConfiguration Authentication Certificate Crlinaccessible: Ignore**

Authentication Certificate Mode: <NotRequired/Validation/Authentication>

Controls the level of security required to allow client systems (typically web browsers) to communicate with the VCS over HTTPS. Default: NotRequired.

NotRequired : the client system does not have to present any form of certificate.

Validation : the client system must present a valid certificate that has been signed by a trusted certificate authority (CA). Note that a restart is required if you are changing from Not required to Certificate validation.

Authentication : the client system must present a valid certificate that has been signed by a trusted CA and contains the client's authentication credentials. When this mode is enabled, the standard login mechanism is no longer available.

Example: **xConfiguration Authentication Certificate Mode: NotRequired**

Authentication Certificate UsernameRegex: <String>

The regular expression to apply to the client certificate presented to the VCS. Use the (? regex) syntax to supply names for capture groups so that matching sub-patterns can be substituted in the associated template. Default: /Subject:.*CN= (? ([^,\]|(\,))*)/m

Example: **xConfiguration Authentication Certificate UsernameRegex: "/Subject:.*CN= (? ([^,\]|(\,))*)/m"**

Authentication Certificate UsernameTemplate: <String>

A template containing a mixture of fixed text and the capture group names used in the Regex. Delimit each capture group name with # , for example, prefix#Group1#suffix. Each capture group name will be replaced with the text obtained from the regular expression processing. The resulting string is used as the user's authentication credentials (username). Default: #captureCommonName#

Example: **xConfiguration Authentication Certificate UsernameTemplate: "#captureCommonName#"**

Authentication H350 BindPassword: <S: 0, 60>

Sets the password to use when binding to the LDAP server.

Example: **xConfiguration Authentication H350 BindPassword: "abcXYZ_123"**

Authentication H350 BindSaslMode: <None/DIGEST-MD5>

The SASL (Simple Authentication and Security Layer) mechanism to use when binding to the LDAP server. Default: DIGEST-MD5.

None: no mechanism is used.

DIGEST-MD5: the DIGEST-MD5 mechanism is used.

Example: **xConfiguration Authentication H350 BindSaslMode: DIGEST-MD5**

Authentication H350 BindUserDn: <S: 0, 500>

Sets the user distinguished name to use when binding to the LDAP server.

Example: **xConfiguration Authentication H350 BindUserDn: "manager"**

Authentication H350 BindUserName: <S: 0, 500>

Sets the username to use when binding to the LDAP server. Only applies if using SASL.

Example: **xConfiguration Authentication H350 BindUserName: "manager"**

Authentication H350 DirectoryBaseDn: <S: 0, 500>

Sets the Distinguished Name to use when connecting to an LDAP server.

Example: **xConfiguration Authentication H350 DirectoryBaseDn: "dc=example,dc=company,dc=com"**

Authentication H350 LdapEncryption: <Off/TLS>

Sets the encryption to use for the connection to the LDAP server. Default : TLS.

Off : no encryption is used.

TLS : TLS encryption is used.

Example: **xConfiguration Authentication H350 LdapEncryption: TLS**

Authentication H350 LdapServerAddress: <S: 0, 256>

The IP address or Fully Qualified Domain Name of the LDAP server to use when making LDAP queries for device authentication.

Example: **xConfiguration Authentication H350 LdapServerAddress: "ldap_server.example.com"**

Authentication H350 LdapServerAddressResolution: <AddressRecord/ServiceRecord>

Sets how the LDAP server address is resolved if specified as an FQDN. Default: AddressRecord.

Address record: DNS A or AAAA record lookup.

SRV record: DNS SRV record lookup.

Example: **xConfiguration Authentication H350 LdapServerAddressResolution: AddressRecord**

Authentication H350 LdapServerPort: <1..65535>

Sets the IP port of the LDAP server to use when making LDAP queries for device authentication. Typically, non-secure connections use 389 and secure connections use 636. Default : 389

Example: **xConfiguration Authentication H350 LdapServerPort: 389**

Authentication H350 Mode: <On/Off>

Enables or disables the use of an H.350 directory for device authentication. Default: Off.

Example: **xConfiguration Authentication H350 Mode: Off**

Authentication LDAP AliasOrigin: <LDAP/Endpoint/Combined>

Determines how aliases are checked and registered. Default: LDAP.

LDAP: the aliases presented by the endpoint are checked against those listed in the LDAP database.

Endpoint: the aliases presented by the endpoint are used; any in the LDAP database are ignored.

Combined: the aliases presented by the endpoint are used in addition to any listed in the LDAP database.

Example: **xConfiguration Authentication LDAP AliasOrigin: LDAP**

Authentication Password: <S: 0, 215>

The password used by the VCS when authenticating with another system. The maximum plaintext length is 128 characters, which is then encrypted. Note: this does not apply to traversal client zones.

Example: **xConfiguration Authentication Password: "password123"**

Authentication Remote Digest Cache ExpireCheckInterval: <0..65535>

The interval between digest authentication cache expiration checks in seconds. Default: 600

Example: **xConfiguration Authentication Remote Digest Cache ExpireCheckInterval: 600**

Authentication Remote Digest Cache Lifetime: <0..43200>

The lifetime of digest authentication interim hashes in seconds. Default: 600

Example: **xConfiguration Authentication Remote Digest Cache Lifetime: 600**

Authentication Remote Digest Cache Limit: <0..65535>

The interval between digest authentication cache expiration checks in seconds. Default: 10000

Example: **xConfiguration Authentication Remote Digest Cache Limit: 10000**

Authentication Remote Digest Cache Mode: <On/Off>

Controls whether the digest authentication cache is enabled. Default: On

Example: **xConfiguration Authentication Remote Digest Cache Mode: On**

Authentication StrictPassword Enabled: <On/Off>

Determines whether local administrator account passwords must meet a minimum level of complexity before they are accepted. In addition, passwords must not: be based on a dictionary word contain too many consecutive characters such as "abc" or "123", contain too few different characters or be palindromes. Default: Off.

On : local administrator account passwords must meet the complexity requirements.

Off : passwords are not checked for complexity.

Example: **xConfiguration Authentication StrictPassword Enabled: Off**

Authentication StrictPassword MaximumConsecutiveRepeated: <0..255>

The maximum number of times the same character can be repeated consecutively. A value of 0 disables this check. Default: 0

Example: **xConfiguration Authentication StrictPassword MaximumConsecutiveRepeated: 0**

Authentication StrictPassword MinimumClasses: <0..4>

The minimum number of character classes that must be present. There are four character classes: digit, upper case, lower case and special. Use this setting if you want to mandate the use of 2-3 different character classes without requiring all of them to be present. A value of 0 disables this check. Default: 0.

Example: **xConfiguration Authentication StrictPassword MinimumClasses: 0**

Authentication StrictPassword MinimumDigits: <0..255>

The minimum number of digits that must be present. A value of 0 disables this check. Default: 2.

Example: **xConfiguration Authentication StrictPassword MinimumDigits: 2**

Authentication StrictPassword MinimumLength: <6..255>

The minimum length of the password. Default: 15.

Example: *xConfiguration Authentication StrictPassword MinimumLength: 15*

Authentication StrictPassword MinimumLowerCase: <0..255>

The minimum number of lower case characters that must be present. A value of 0 disables this check. Default: 2.

Example: **xConfiguration Authentication StrictPassword MinimumLowerCase: 2**

Authentication StrictPassword MinimumOther: <0..255>

The minimum number of special characters that must be present. A special character is anything that is not a letter or a digit. A value of 0 disables this check. Default: 2

Example: **xConfiguration Authentication StrictPassword MinimumOther: 2**

Authentication StrictPassword MinimumUpperCase: <0..255>

The minimum number of upper case characters that must be present. A value of 0 disables this check. Default : 2

Example: *xConfiguration Authentication StrictPassword MinimumUpperCase: 2*

Authentication UserName: <S: 0, 128>

The username used by the VCS when authenticating with another system. Note: this does not apply to traversal client zones.

Example: **xConfiguration Authentication UserName: "user123"**

Bandwidth Default: <64..65535>

The bandwidth (in kbps) to use on calls managed by the VCS where no bandwidth has been specified by the endpoint. Default: 384.

Example: **xConfiguration Bandwidth Default: 384**

Bandwidth Downspeed PerCall Mode: <On/Off>

Determines whether the VCS attempts to downspeed a call if there is insufficient per-call bandwidth available to fulfill the request. Default: On.

On: the VCS will attempt to place the call at a lower bandwidth.

Off: the call will be rejected.

Example: `xConfiguration Bandwidth Downspeed PerCall Mode: On`

Bandwidth Downspeed Total Mode: <On/Off>

Determines whether the VCS attempts to downspeed a call if there is insufficient total bandwidth available to fulfill the request. Default: On.

On: the VCS will attempt to place the call at a lower bandwidth.

Off: the call will be rejected.

Example: `xConfiguration Bandwidth Downspeed Total Mode: On`

Bandwidth Link [1..3000] Name: <S: 1, 50>

Assigns a name to this link.

Example: `xConfiguration Bandwidth Link 1 Name: "HQ to BranchOffice"`

Bandwidth Link [1..3000] Node1 Name: <S: 0, 50>

Specifies the first zone or subzone to which this link will be applied.

Example: `xConfiguration Bandwidth Link 1 Node1 Name: "HQ"`

Bandwidth Link [1..3000] Node2 Name: <S: 0, 50>

Specifies the second zone or subzone to which this link will be applied.

Example: `xConfiguration Bandwidth Link 1 Node2 Name: "BranchOffice"`

Bandwidth Link [1..3000] Pipe1 Name: <S: 0, 50>

Specifies the first pipe to be associated with this link.

Example: `xConfiguration Bandwidth Link 1 Pipe1 Name: "512Kb ASDL"`

Bandwidth Link [1..3000] Pipe2 Name: <S: 0, 50>

Specifies the second pipe to be associated with this link.

Example: `xConfiguration Bandwidth Link 1 Pipe2 Name: "2Gb Broadband"`

Bandwidth Pipe [1..1000] Bandwidth PerCall Limit: <1..100000000>

If this pipe has limited per-call bandwidth, sets the maximum amount of bandwidth (in kbps) available for any one call. Default: 1920.

Example: `xConfiguration Bandwidth Pipe 1 Bandwidth PerCall Limit: 256`

Bandwidth Pipe [1..1000] Bandwidth PerCall Mode: <Limited/Unlimited/NoBandwidth>

Determines whether or not this pipe is limiting the bandwidth of individual calls. Default: Unlimited.

NoBandwidth: no bandwidth available. No calls can be made on this pipe.

Example: `xConfiguration Bandwidth Pipe 1 Bandwidth PerCall Mode: Limited`

Bandwidth Pipe [1..1000] Bandwidth Total Limit: <1..100000000>

If this pipe has limited bandwidth, sets the maximum bandwidth (in kbps) available at any one time on the pipe. Default: 500000.

Example: `xConfiguration Bandwidth Pipe 1 Bandwidth Total Limit: 1024`

Bandwidth Pipe [1..1000] Bandwidth Total Mode: <Limited/Unlimited/NoBandwidth>

Determines whether or not this pipe is enforcing total bandwidth restrictions. Default: Unlimited.

NoBandwidth: no bandwidth available. No calls can be made on this pipe.

Example: `xConfiguration Bandwidth Pipe 1 Bandwidth Total Mode: Limited`

Bandwidth Pipe [1..1000] Name: <S: 1, 50>

Assigns a name to this pipe.

Example: `xConfiguration Bandwidth Pipe 1 Name: "512Kb ASDL"`

Call Loop Detection Mode: <On/Off>

Specifies whether the VCS will check for call loops. Default: On.

Example: `xConfiguration Call Loop Detection Mode: On`

Call Routed Mode: <Always/Optimal>

Specifies whether the VCS routes the signaling for calls. Default: Always.

Always: the VCS will always route the call signaling.

Optimal: if possible, the VCS will remove itself from the call signaling path, which may mean the call does not consume a call license.

Example: `xConfiguration Call Routed Mode: Always`

Call Services CallsToUnknownIPAddresses: <Off/Direct/Indirect>

The way in which the VCS attempts to call systems that are not registered with it or one of its neighbors. Default: Indirect.

Direct: allows an endpoint to make a call to an unknown IP address without the VCS querying any neighbors. The call setup would occur just as it would if the far end were registered directly to the local system.

Indirect: upon receiving a call to an unknown IP address, the VCS will query its neighbors for the remote address and if permitted will route the call through the neighbor.

Off: endpoints registered directly to the VCS may only call an IP address of a system also registered directly to that VCS.

Example: `xConfiguration Call Services CallsToUnknownIPAddresses: Indirect`

Call Services Fallback Alias: <S: 0, 60>

Specifies the alias to which incoming calls are placed for calls where the IP address or domain name of the VCS has been given but no callee alias has been specified.

Example: `xConfiguration Call Services Fallback Alias: "reception@example.com"`

DNS PerDomainServer [1..5] Address: <S: 0, 39>

The IP address of the DNS server to use only when resolving hostnames for the associated domain names.

Example: `xConfiguration DNS PerDomainServer 1 Address: "192.168.12.1"`

DNS PerDomainServer [1..5] Domain1: <S: 0, 39>

The first domain name to be resolved by this particular DNS server.

Example: `xConfiguration DNS PerDomainServer 1 Domain1: "dept.example.com"`

DNS PerDomainServer [1..5] Domain2: <S: 0, 39>

The second domain name to be resolved by this particular DNS server.

Example: `xConfiguration DNS PerDomainServer 1 Domain2: "other.example.com"`

DNS Server [1..5] Address: <S: 0, 39>

The IP address of a default DNS server to use when resolving domain names. You can specify up to 5 servers. These default DNS servers are used if there is no per-domain DNS server defined for the domain being looked up.

Example: `xConfiguration DNS Server 1 Address: "192.168.12.0"`

ErrorReport Contact: <S: 0, 128>

An optional contact email address for follow up on incident reports if required.

Example: `xConfiguration ErrorReport Contact: "bob smith"`

ErrorReport CoreDump: <On/Off>

Determines whether diagnostic core dump files are created. Default: On.

Example: `xConfiguration ErrorReport CoreDump: On`

ErrorReport Mode: <On/Off>

Determines whether details of application failures are automatically sent to a web service. Default: Off.

Example: `xConfiguration ErrorReport Mode: Off`

ErrorReport Proxy: <S: 0, 128>

An optional proxy server to use for the HTTP/HTTPS connections to the incident reporting server.

Example: `xConfiguration ErrorReport Proxy: https://proxy_address/submiterror/`

ErrorReport Url: <S: 0, 128>

The URL of the web service to which details of application failures are sent. Default: https://cc-reports.cisco.com/submitapplicationerror/

Example: `xConfiguration ErrorReport Url: https://cc-reports.cisco.com/submitapplicationerror/`

Ethernet [1..2] IP V4 Address: <S: 7,15>

Specifies the IPv4 address of the specified LAN port. Note: you must restart the system for any changes to take effect.

Example: `xConfiguration Ethernet 1 IP V4 Address: "192.168.10.10"`

Ethernet [1..2] IP V4 StaticNAT Address: <S:7,15>

If the VCS is operating in static NAT mode, this specifies the external public IPv4 address of that static NAT. You must restart the system for any changes to take effect.

Example: `xConfiguration Ethernet 1 IP V4 StaticNAT Address: "64.22.64.85"`

Ethernet [1..2] IP V4 StaticNAT Mode: <On/Off>

Specifies whether the VCS is located behind a static NAT. You must restart the system for any changes to take effect. Default: Off.

Example: `xConfiguration Ethernet 1 IP V4 StaticNAT Mode: On`

Ethernet [1..2] IP V4 SubnetMask: <S: 7,15>

Specifies the IPv4 subnet mask of the specified LAN port. You must restart the system for any changes to take effect.

Example: `xConfiguration Ethernet 1 IP V4 SubnetMask: "255.255.255.0"`

Ethernet [1..2] IP V6 Address: <S: 0, 39>

Specifies the IPv6 address of the specified LAN port. You must restart the system for any changes to take effect.

Example: `xConfiguration Ethernet 1 IP V6 Address: "2001:db8::1428:57ab"`

Ethernet [1..2] Speed: <Auto/10half/10full/100half/100full/1000full

Sets the speed of the Ethernet link from the specified LAN port. Use Auto to automatically configure the speed. You must restart the system for any changes to take effect. Default: Auto.

Example: `xConfiguration Ethernet 1 Speed: Auto`

ExternalManager Address: <S: 0, 128>

Sets the IP address or Fully Qualified Domain Name (FQDN) of the external manager.

Example: `xConfiguration ExternalManager Address: "192.168.0.0"`

ExternalManager Path: <S: 0, 255>

Sets the URL of the external manager. Default: tms/public/external/management/SystemManagementService.asmx

Example: `xConfiguration ExternalManager Path: "tms/public/external/management/SystemManagementService.asmx"`

ExternalManager Protocol: <HTTP/HTTPS>

The protocol used to connect to the external manager. Default: HTTPS.

Example: `xConfiguration ExternalManager Protocol: HTTPS`

ExternalManager Server Certificate Verification Mode: <On/Off>

Controls whether the certificate presented by the external manager is verified. Default: On.

Example: `xConfiguration ExternalManager Server Certificate Verification Mode: On`

H323 Gatekeeper AutoDiscovery Mode: <On/Off>

Determines whether or not the VCS responds to gatekeeper discovery requests from endpoints. Default: On.

Example: `xConfiguration H323 Gatekeeper AutoDiscovery Mode: On`

H323 Gatekeeper CallSignaling PortRange End: <1024..65534>

Specifies the upper port in the range to be used by calls once they are established. Default: 19999.

Example: `xConfiguration H323 Gatekeeper CallSignaling PortRange End: 19999`

H323 Gatekeeper CallSignaling PortRange Start: <1024..65534>

Specifies the lower port in the range to be used by calls once they are established. Default: 15000.

Example: `xConfiguration H323 Gatekeeper CallSignaling PortRange Start: 15000`

H323 Gatekeeper CallSignaling TCP Port: <1024..65534>

Specifies the port that listens for H.323 call signaling. Default: 1720.

Example: `xConfiguration H323 Gatekeeper CallSignaling TCP Port: 1720`

H323 Gatekeeper CallTimeToLive: <60..65534>

Specifies the interval (in seconds) at which the VCS polls the endpoints in a call to verify that they are still in the call. Default: 120.

Example: `xConfiguration H323 Gatekeeper CallTimeToLive: 120`

H323 Gatekeeper Registration ConflictMode: <Reject/Overwrite>

How the system behaves if an endpoint attempts to register an alias currently registered from another IP address. Default: Reject.

Reject: denies the registration.

Overwrite: deletes the original registration and replaces it with the new registration.

Example: `xConfiguration H323 Gatekeeper Registration ConflictMode: Reject`

H323 Gatekeeper Registration UDP Port: <1024..65534>

Specifies the port to be used for H.323 UDP registrations. Default: 1719.

Example: `xConfiguration H323 Gatekeeper Registration UDP Port: 1719`

H323 Gatekeeper TimeToLive: <60..65534>

The interval (in seconds) at which an H.323 endpoint must re-register with the VCS to confirm that it is still functioning. Default: 1800.

Example: `xConfiguration H323 Gatekeeper TimeToLive: 1800`

H323 Gateway CallerId: <IncludePrefix/ExcludePrefix>

Specifies whether the prefix of the ISDN gateway is inserted into the caller's E.164 number presented on the destination endpoint. Including the prefix allows the recipient to directly return the call. Default: ExcludePrefix.

IncludePrefix: inserts the ISDN gateway's prefix into the source E.164 number.

ExcludePrefix: only displays the source E.164 number.

Example: `xConfiguration H323 Gateway CallerId: ExcludePrefix`

H323 Mode: <On/Off>

Determines whether or not the VCS will provide H.323 gatekeeper functionality. Default: On.

Example: `xConfiguration H323 Mode: On`

Interworking BFCP Compatibility Mode: <Auto/TAA/Draft>

Controls the compatibility settings of the SIP to H.323 interworking BFCP component. Default: Auto.

Example: `xConfiguration Interworking BFCP Compatibility Mode: Auto`

Interworking Encryption Mode: <Auto/Off>

Determines whether or not the VCS will allow encrypted calls between SIP and H.323 endpoints. Default: Auto.

Off: interworked calls will never be encrypted.

Auto: interworked calls will be encrypted if the endpoints request it.

Example: `xConfiguration Interworking Encryption Mode: Auto`

Interworking Encryption Replay Protection Mode: <On/Off>

Controls whether the VCS will perform replay protection for incoming SRTP packets when interworking a call. Default: Off.

On: replayed SRTP packets will be dropped by the VCS.

Off: the VCS will not check for replayed SRTP packets.

Example: `xConfiguration Interworking Encryption Replay Protection Mode: Off`

Interworking Mode: <On/Off/RegisteredOnly>

Determines whether or not the VCS will act as a gateway between SIP and H.323 calls. Default: RegisteredOnly.

Off: the VCS will not act as a SIP-H.323 gateway.

On: the VCS will act as SIP-H.323 gateway regardless of whether the endpoints are locally registered.

RegisteredOnly: the VCS will act as a SIP-H.323 gateway but only if at least one of the endpoints is locally registered.

Example: `xConfiguration Interworking Mode: On`

Interworking Require Invite Header Mode: <On/Off>

Controls whether the SIP to H.323 interworking function sends com.tandberg.sdp.duo.enable and com.tandberg.sdp.bfcp.udp in the require header for dialog forming INVITEs. Default: Off.

Example: `xConfiguration Interworking Require Invite Header Mode: Off"`

IP DNS Domain Name: <S: 0, 128>

The name to be appended to an unqualified host name before querying the DNS server. Used when attempting to resolve unqualified domain names for NTP, LDAP, external manager and remote syslog servers. May also be used along with the **System host name** to identify references to this VCS in SIP messaging.

Example: `xConfiguration IP DNS Domain Name: "example.com"`

IP DNS Hostname : <S: 0, 63>

The DNS host name that this system is known by. This is not the fully-qualified domain name, just the host label portion. The name can only contain letters, digits, hyphens and underscores. The first character must be a letter and the last character must be a letter or a digit.

Example: `xConfiguration IP DNS Hostname: "localsystem"`

IP DNS MaxPort: <1024..65535>

The upper source port in the range used for sending DNS queries. Requests choose a random port from this range. Warning: setting a small source port range increases your vulnerability to DNS spoofing attacks. Default: 65535.

Example: `xConfiguration IP DNS MaxPort: 65535`

IP DNS MinPort: <1024..65535>

The lower source port in the range used for sending DNS queries. Requests choose a random port from this range. Warning: setting a small source port range increases your vulnerability to DNS spoofing attacks. Default: 1024.

Example: `xConfiguration IP DNS MinPort: 1024`

IP DNS UseEphemeralPortRange: <On/Off>

Determines whether outgoing DNS queries use the system's normal ephemeral port range, or a custom port range that you can configure. Default: On.

Example: `xConfiguration IP DNS UseEphemeralPortRange: On`

IP Ephemeral PortRange End: <1024..65534>

The highest port in the range used for ephemeral outbound connections not otherwise constrained by VCS call processing. Default: 35999.

Example: `xConfiguration IP Ephemeral PortRange End: 35999`

IP Ephemeral PortRange Start: <1024..65534>

The lowest port in the range used for ephemeral outbound connections not otherwise constrained by VCS call processing. Default: 30000.

Example: `xConfiguration IP Ephemeral PortRange Start: 30000`

IP External Interface: <LAN1/LAN2>

Defines which LAN interface is externally facing. Default: LAN1.

Example: `xConfiguration IP External Interface: LAN1`

IP Gateway: <S: 7,15>

Specifies the IPv4 gateway of the VCS. Note: you must restart the system for any changes to take effect. Default: 127.0.0.1

Example: `xConfiguration IP Gateway: "192.168.127.0"`

IP QoS Mode: <None/DiffServ>

The type of QoS (Quality of Service) tags to apply to all signaling and media packets. You must restart the system for any changes to take effect. Default: None.

None: no specific QoS tagging is applied.

DiffServ: puts the specified Tag value in the TOS (Type Of Service) field of the IPv4 header or TC (Traffic Class) field of the IPv6 header.

Example: `xConfiguration IP QoS Mode: DiffServ`

IP QoS Value: <0..63>

The value to stamp onto all signaling and media traffic routed through the system. You must restart the system for any changes to take effect. Default: 0.

Example: `xConfiguration IP QoS Value: 16`

IP RFC4821 Mode: <Auto/Enabled/Disabled>

Determines when RFC4821 Packetization Layer Path MTU Discovery is used by the VCS network interface. Default: Disabled.

Enabled: Packetization layer MTU probing is always performed.

Auto: Disabled by default, enabled when an ICMP black hole is detected.

Disabled: Packetization layer MTU probing is not performed.

Example: `xConfiguration IP RFC4821 Mode: Disabled`

IP Route [1..50] Address: <S: 0, 39>

Specifies an IP address used in conjunction with the Prefix Length to determine the network to which this route applies.

Example: `xConfiguration IP Route 1 Address: "128.168.0.0"`

IP Route [1..50] Gateway: <S: 0, 39>

Specifies the IP address of the Gateway for this route.

Example: `xConfiguration IP Route 1 Gateway: "192.168.0.0"`

IP Route [1..50] Interface: <Auto/LAN1/LAN2>

Specifies the LAN interface to use for this route. Auto: The VCS will select the most appropriate interface to use. Default: Auto.

Example: `xConfiguration IP Route 1 Interface: Auto`

IP Route [1..50] PrefixLength: <0..128>

The number of bits of the IP address which must match when determining the network to which this route applies. Default: 32.

Example: `xConfiguration IP Route 1 PrefixLength: 16`

IP V6 Gateway: <S: 0, 39>

Specifies the IPv6 gateway of the VCS. You must restart the system for any changes to take effect.

Example: `xConfiguration IP V6 Gateway: "3dda:80bb:6::9:144"`

IPProtocol: <Both/IPv4/IPv6>

Selects whether the VCS is operating in IPv4, IPv6 or dual stack mode. You must restart the system for any changes to take effect. Default: IPv4.

Example: `xConfiguration IPProtocol: IPv4`

Language Default: <S: 0, 128>

The default language used on the web interface. Default: "en_US".

Example: `xConfiguration Language Default: "en_US"`

Log Level: <1..4>

Controls the granularity of Event Logging. 1 is the least verbose, 4 the most. Note: this setting is not retrospective; it determines which events are written to the Event Log from now onwards. Default: 1

Example: `xConfiguration Log Level: 1`

Logger Network [1..n] Level: <FATAL/ERROR/WARN/INFO/DEBUG/TRACE>

The logging level for the nominated module. Default : INFO.

Example: `xConfiguration Logger Developer 1 Level: INFO`

Login Remote LDAP BaseDN Accounts: <S: 0,255>

Sets the Distinguished Name to use as the base when searching for administrator and user accounts.

Example: `xConfiguration Login Remote LDAP BaseDN Accounts: "ou=useraccounts,dc=corporation,dc=int"`

Login Remote LDAP BaseDN Groups: <S: 0,255>

Sets the Distinguished Name to use as the base when searching for administrator and user groups.

Example: `xConfiguration Login Remote LDAP BaseDN Groups: "ou=groups,dc=corporation,dc=int"`

Login Remote LDAP CRLCheck: <None/Peer/All>

Specifies whether certificate revocation lists (CRLs) are checked when forming a TLS connection with the LDAP server. CRL data is uploaded to the VCS via the trusted CA certificate PEM file. Default: None.

None: no CRL checking is performed.

Peer: only the CRL associated with the CA that issued the LDAP server's certificate is checked.

All: all CRLs in the trusted certificate chain of the CA that issued the LDAP server's certificate are checked.

Example: `xConfiguration Login Remote LDAP CRLCheck: Peer`

Login Remote LDAP DirectoryType: <ActiveDirectory>

Defines the type of LDAP directory that is being accessed. Default: ActiveDirectory.

ActiveDirectory: directory is Windows Active Directory.

Example: `xConfiguration Login Remote LDAP DirectoryType: ActiveDirectory`

Login Remote LDAP Encryption: <Off/TLS>

Sets the encryption to use for the connection to the LDAP server. Default: TLS.

Off: no encryption is used.

TLS: TLS encryption is used.

Example: **xConfiguration Login Remote LDAP Encryption: Off**

Login Remote LDAP SASL: <None/DIGEST-MD5>

The SASL (Simple Authentication and Security Layer) mechanism to use when binding to the LDAP server. Default: DIGEST-MD5.

None: no mechanism is used.

DIGEST-MD5: The DIGEST-MD5 mechanism is used.

Example: **xConfiguration Login Remote LDAP SASL: DIGEST-MD5**

Login Remote LDAP Server Address: <S: 0,128>

Sets the IP address or Fully Qualified Domain Name (FQDN) of the LDAP server to use when making LDAP queries.

Example: **xConfiguration Login Remote LDAP Server Address: "server.example.com"**

Login Remote LDAP Server FQDNResolution: <AddressRecord/SRVRecord>

Sets how the LDAP server address is resolved if specified as an FQDN. Default: AddressRecord.

AddressRecord: DNS A or AAAA record lookup.

SRVRecord: DNS SRV record lookup.

Example: **xConfiguration Login Remote LDAP Server FQDNResolution: AddressRecord**

Login Remote LDAP Server Port: <1..65534>

Sets the IP port of the LDAP server to use when making LDAP queries. Typically, non-secure connections use 389 and secure connections use 636. Default: 389.

Example: **xConfiguration Login Remote LDAP Server Port: 389**

Login Remote LDAP VCS BindDN: <S: 0,255>

Sets the user distinguished name to use when binding to the LDAP server.

Example: **xConfiguration Login Remote LDAP VCS BindDN: "systemmanager"**

Login Remote LDAP VCS BindPassword: <S: 0,122>

Sets the password to use when binding to the LDAP server. The maximum plaintext length is 60 characters, which is then encrypted.

Example: **xConfiguration Login Remote LDAP VCS BindPassword: "password123"**

Login Remote LDAP VCS BindUsername: <S: 0,255>

Sets the username to use when binding to the LDAP server. Only applies if using SASL.

Example: **xConfiguration Login Remote LDAP VCS BindUsername: "systemmanager"**

Login Remote Protocol: <LDAP>

The protocol used to connect to the external directory. Default: LDAP.

Example: **xConfiguration Login Remote Protocol: LDAP**

Login Source Admin: <LocalOnly/RemoteOnly/Both>

Defines where administrator login credentials are authenticated before access is allowed. Default: LocalOnly.

LocalOnly: credentials are verified against a local database stored on the VCS.

RemoteOnly: credentials are verified against an external credentials directory, for example Windows Active Directory. Note that this disables login access via the default admin account.

Both: credentials are verified first against a local database stored on the VCS, and then if no matching account is found the external credentials directory is used instead.

Example: **xConfiguration Login Source Admin: LocalOnly**

Login Source User: <Local/Remote>

Defines where FindMe login credentials are authenticated before access is allowed. Default : Local.

Remote: credentials are verified against an external credentials directory, for example Windows Active Directory.

Local: credentials are verified against a local database stored on the VCS.

Example: `xConfiguration Login Source User: Local`

Login User [1..n] Name: <S: 0,60>

Defines the name for this entry in the local authentication database.

Example: `xConfiguration Login User 1 Name: "alice"`

Login User [1..n] Password: <S: 0,128>

Defines the password for this entry in the local authentication database.

Example: `xConfiguration Login User 1 Password: "abcXYZ_123"`

Management Interface HstsMode: <On/Off>

Determines whether web browsers are instructed to only ever use a secure connection to access this server. Enabling this feature gives added protection against man-in-the-middle (MITM) attacks. Default: On.

On: the Strict-Transport-Security header is sent with all responses from the web server, with a 1 year expiry time.

Off : the Strict-Transport-Security header is not sent, and browsers work as normal. Note: you must restart the system for any changes to take effect.

Example: `xConfiguration Management Interface HstsMode: On`

Management Session InactivityTimeout: <0..65535>

Sets the number of minutes that an administration session (serial port, HTTPS or SSH) or a user (FindMe) session may be inactive before the session is timed out. A value of 0 turns session time outs off. Default: 30.

Example: `xConfiguration Management Session InactivityTimeout: 30`

Management Session MaxConcurrentSessionsTotal: <0..65535>

The maximum number of concurrent administrator sessions allowed on the system. This includes web, SSH and serial sessions. A value of 0 turns session limits off. Default: 0.

Example: `xConfiguration Management Session MaxConcurrentSessionsTotal: 0`

Management Session MaxConcurrentSessionsUser: <0..65535>

The number of concurrent sessions that each individual administrator account is allowed on the system. This includes web, SSH and serial sessions. A value of 0 turns session limits off. Default: 0.

Example: `xConfiguration Management Session MaxConcurrentSessionsUser: 0`

NTP Server [1..5] Address: <S: 0, 128>

Sets the IP address or Fully Qualified Domain Name (FQDN) of up to 5 NTP servers to be used when synchronizing system time.

Example: `xConfiguration NTP Server 1 Address: "ntp.server.example.com"`

Option [1..64] Key: <S: 0, 90>

Specifies the option key of your software option. These are added to the system in order to add extra functionality, such as increasing the system's capacity. Contact your Cisco support representative for further information.

Example: `xConfiguration Option 1 Key: "1X4757T5-1-60BAD5CD"`

Policy AdministratorPolicy Mode: <Off/LocalCPL/LocalService/PolicyService>

Enables and disables use of Call Policy. Default: Off.

Off: Disables call policy.

LocalCPL: uses policy from an uploaded CPL file.

LocalService: uses group policy information and a local file.

PolicyService: uses an external policy server.

Example: `xConfiguration Policy AdministratorPolicy Mode: Off`

Policy AdministratorPolicy Service DefaultCPL: <S: 0,255>

The CPL used by the VCS when the remote service is unavailable. Default: <reject status='403' reason='Service Unavailable'/>

Example: `xConfiguration Policy AdministratorPolicy Service DefaultCPL: "<reject status='403' reason='Service Unavailable'/>"`

Policy AdministratorPolicy Service Password: <S: 0,82>

Specifies the password used by the VCS to log in and query the remote service. The maximum plaintext length is 30 characters, which will then be encrypted.

Example: `xConfiguration Policy AdministratorPolicy Service Password: "password123"`

Policy AdministratorPolicy Service Path: <S: 0,255>

Specifies the URL of the remote service.

Example: `xConfiguration Policy AdministratorPolicy Service Path: "service"`

Policy AdministratorPolicy Service Protocol: <HTTP/HTTPS>

Specifies the protocol used to connect to the remote service. Default: HTTPS.

Example: `xConfiguration Policy AdministratorPolicy Service Protocol: HTTPS`

Policy AdministratorPolicy Service Server [1..3] Address: <S: 0,128>

Specifies the IP address or Fully Qualified Domain Name (FQDN) of the remote service.

Example: `xConfiguration Policy AdministratorPolicy Service Server 1 Address: "service.server.example.com"`

Policy AdministratorPolicy Service Status Path: <S: 0..255>

Specifies the path for obtaining the remote service status. Default: status

Example: `xConfiguration Policy AdministratorPolicy Service Status Path: status`

Policy AdministratorPolicy Service TLS CRLCheck Mode: <On/Off>

Controls certificate revocation list checking of the certificate supplied by the policy service. When enabled, the server's X.509 certificate will be checked against the revocation list of the certificate authority of the certificate. Default: Off.

Example: `xConfiguration Policy AdministratorPolicy Service TLS CRLCheck Mode: Off`

Policy AdministratorPolicy Service TLS Verify Mode: <On/Off>

Controls X.509 certificate checking and mutual authentication between this VCS and the policy service. When enabled, the server's FQDN or IP address, as specified in the address field, must be contained within the server's X.509 certificate (in either the Subject Common Name or the Subject Alternative Name attributes). Default: On.

Example: `xConfiguration Policy AdministratorPolicy Service TLS Verify Mode: On`

Policy AdministratorPolicy Service UserName: <S: 0,30>

Specifies the user name used by the VCS to log in and query the remote policy service.

Example: `xConfiguration Policy AdministratorPolicy Service UserName: "user123"`

Policy FindMe CallerID: <FindMeID/IncomingID>

Determines how the source of an incoming call is presented to the callee. Default: IncomingID.

IncomingID: displays the address of the endpoint from which the call was placed.

FindMeID: displays the FindMe ID associated with the originating endpoint's address.

Example: `xConfiguration Policy FindMe CallerId: FindMeID`

Policy FindMe Mode: <Off/On/ThirdPartyManager>

Configures how the FindMe application operates. Default: Off.

Off: disables FindMe.

On: enables FindMe.

ThirdPartyManager: uses an off-box, third-party FindMe manager.

Example: `xConfiguration Policy FindMe Mode: On`

Policy FindMe Server Address: <S: 0, 128>

Specifies the IP address or Fully Qualified Domain Name (FQDN) of the remote FindMe Manager.

Example: `xConfiguration Policy FindMe Server Address: "userpolicy.server.example.com"`

Policy FindMe Server Password: <S: 0, 82>

Specifies the password used by the VCS to log in and query the remote FindMe Manager. The maximum plaintext length is 30 characters, which will then be encrypted.

Example: `xConfiguration Policy FindMe Server Password: "password123"`

Policy FindMe Server Path: <S: 0, 255>

Specifies the URL of the remote FindMe Manager.

Example: `xConfiguration Policy FindMe Server Path: "service"`

Policy FindMe Server Protocol: <HTTP/HTTPS>

Specifies the protocol used to connect to the remote FindMe Manager. Default: HTTPS.

Example: `xConfiguration Policy FindMe Server Protocol: HTTPS`

Policy FindMe Server UserName: <S: 0, 30>

Specifies the user name used by the VCS to log in and query the remote FindMe Manager.

Example: `xConfiguration Policy FindMe Server UserName: "user123"`

Policy FindMe UserDeviceRestriction: <Off/On>

Controls if users are restricted from adding, deleting or modifying their own devices. Default: Off.

Example: `xConfiguration Policy FindMe UserDeviceRestriction: Off`

Policy Services Service [1..20] DefaultCPL: <S: 0,255>

The CPL used by the VCS when the remote service is unavailable. Default: <reject status='504' reason='Policy Service Unavailable'/>

Example: `xConfiguration Policy Services Service 1 DefaultCPL: "<reject status='403' reason='Service Unavailable'/>"`

Policy Services Service [1..20] Description: <S: 0,64>

A free-form description of the Policy Service.

Example: `xConfiguration Policy Services Service 1 Description: "Conference management service"`

Policy Services Service [1..20] HTTPMethod: <POST/GET>

Specifies the HTTP method type to use for the remote service. Default: POST.

Example: `xConfiguration Policy Services Service 1 HTTPMethod: POST`

Policy Services Service [1..20] Name: <S: 0,50>

Assigns a name to this Policy Service.

Example: `xConfiguration Policy Services Service 1 Name: "Conference handler"`

Policy Services Service [1..20] Password: <S: 0,82>

Specifies the password used by the VCS to log in and query the remote service. The maximum plaintext length is 30 characters, which will then be encrypted.

Example: `xConfiguration Policy Services Service 1 Password: "password123"`

Policy Services Service [1..20] Path: <S: 0,255>

Specifies the URL of the remote service.

Example: `xConfiguration Policy Services Service 1 Path: "service"`

Policy Services Service [1..20] Protocol: <HTTP/HTTPS>

Specifies the protocol used to connect to the remote service. Default: HTTPS.

Example: `xConfiguration Policy Services Service 1 Protocol: HTTPS`

Policy Services Service [1..20] Server [1..3] Address: <S: 0,128>

Specifies the IP address or Fully Qualified Domain Name (FQDN) of the remote service.

Example: `xConfiguration Policy Services Service 1 Server 1 Address: "192.168.0.0"`

Policy Services Service [1..20] Status Path: <S: 0..255>

Specifies the path for obtaining the remote service status. Default: status

Example: `xConfiguration Policy Services Service 1 Status Path: status`

Policy Services Service [1..20] TLS CRLCheck Mode: <On/Off>

Controls certificate revocation list checking of the certificate supplied by the policy service. When enabled, the server's X.509 certificate will be checked against the revocation list of the certificate authority of the certificate. Default: Off.

Example: `xConfiguration Policy Services Service 1 TLS CRLCheck Mode: Off`

Policy Services Service [1..20] TLS Verify Mode: <On/Off>

Controls X.509 certificate checking and mutual authentication between this VCS and the policy service. When enabled, the server's FQDN or IP address, as specified in the address field, must be contained within the server's X.509 certificate (in either the Subject Common Name or the Subject Alternative Name attributes). Default: On.

Example: `xConfiguration Policy Services Service 1 TLS Verify Mode: On`

Policy Services Service [1..20] UserName: <S: 0,30>

Specifies the user name used by the VCS to log in and query the remote service.

Example: `xConfiguration Policy Services Service 1 UserName: "user123"`

Registration AllowList [1..2500] Description: <S: 0,64>

A free-form description of the Allow List rule.

Example: `xConfiguration Registration AllowList 1 Description: "Everybody at @example.com"`

Registration AllowList [1..2500] Pattern String: <S: 0, 60>

Specifies an entry to be added to the Allow List. If one of an endpoint's aliases matches one of the patterns in the Allow List, the registration will be permitted.

Example: `xConfiguration Registration AllowList 1 Pattern String: "john.smith@example.com"`

Registration AllowList [1..2500] Pattern Type: <Exact/Prefix/Suffix/Regex>

Specifies whether the entry in the Allow List is a prefix, suffix, regular expression, or must be matched exactly. Default: Exact.

Exact: the string must match the alias character for character.

Prefix: the string must appear at the beginning of the alias.

Suffix: the string must appear at the end of the alias.

Regex: the string will be treated as a regular expression.

Example: **xConfiguration Registration AllowList 1 Pattern Type: Exact**

Registration DenyList [1..2500] Description: <S: 0,64>

A free-form description of the Deny List rule.

Example: **xConfiguration Registration DenyList 1 Description: "Anybody at @nuisance.com"**

Registration DenyList [1..2500] Pattern String: <S: 0, 60>

Specifies an entry to be added to the Deny List. If one of an endpoint's aliases matches one of the patterns in the Deny List, the registration will not be permitted.

Example: **xConfiguration Registration DenyList 1 Pattern String: "john.jones@example.com"**

Registration DenyList [1..2500] Pattern Type: <Exact/Prefix/Suffix/Regex>

Specifies whether the entry in the Deny List is a prefix, suffix, regular expression, or must be matched exactly. Default: Exact.

Exact: the string must match the alias character for character.

Prefix: the string must appear at the beginning of the alias.

Suffix: the string must appear at the end of the alias.

Regex: the string will be treated as a regular expression.

Example: **xConfiguration Registration DenyList 1 Pattern Type: Exact**

Registration RestrictionPolicy Mode: <None/AllowList/DenyList/Directory/PolicyService>

Specifies the policy to be used when determining which endpoints may register with the system. Default: None.

None: no restriction.

AllowList: only endpoints attempting to register with an alias listed on the Allow List may register.

DenyList: all endpoints, except those attempting to register with an alias listed on the Deny List, may register.

Directory: only endpoints who register an alias listed in the local Directory, may register.

PolicyService: only endpoints who register with details allowed by the Policy Service, may register.

Example: **xConfiguration Registration RestrictionPolicy Mode: None**

Registration RestrictionPolicy Service DefaultCPL: <S: 0,255>

The CPL used by the VCS when the remote service is unavailable. Default: <reject status='504' reason='Policy Service Unavailable'/>

Example: **xConfiguration Registration RestrictionPolicy Service DefaultCPL: "<reject status='403' reason='Service Unavailable'/>"**

Registration RestrictionPolicy Service Password: <S: 0,82>

Specifies the password used by the VCS to log in and query the remote service. The maximum plaintext length is 30 characters, which will then be encrypted.

Example: **xConfiguration Registration RestrictionPolicy Service Password: "password123"**

Registration RestrictionPolicy Service Path: <S: 0,255>

Specifies the URL of the remote service.

Example: **xConfiguration Registration RestrictionPolicy Service Path: "service"**

Registration RestrictionPolicy Service Protocol: <HTTP/HTTPS>

Specifies the protocol used to connect to the remote service. Default: HTTPS.

Example: `xConfiguration Registration RestrictionPolicy Service Protocol: HTTPS`

Registration RestrictionPolicy Service Server [1..3] Address: <S: 0,128>

Specifies the IP address or Fully Qualified Domain Name (FQDN) of the remote service.

Example: `xConfiguration Registration RestrictionPolicy Service Server 1 Address: "192.168.0.0"`

Registration RestrictionPolicy Service Status Path: <S: 0..255>

Specifies the path for obtaining the remote service status. Default: status

Example: `xConfiguration Registration RestrictionPolicy Service Status Path: status`

Registration RestrictionPolicy Service TLS CRLCheck Mode: <On/Off>

Controls certificate revocation list checking of the certificate supplied by the policy service. When enabled, the server's X.509 certificate will be checked against the revocation list of the certificate authority of the certificate. Default: Off.

Example: `xConfiguration Registration RestrictionPolicy Service TLS CRLCheck Mode: Off`

Registration RestrictionPolicy Service TLS Verify Mode: <On/Off>

Controls X.509 certificate checking and mutual authentication between this VCS and the policy service. When enabled, the server's FQDN or IP address, as specified in the address field, must be contained within the server's X.509 certificate (in either the Subject Common Name or the Subject Alternative Name attributes). Default: On.

Example: `xConfiguration Registration RestrictionPolicy Service TLS Verify Mode: On`

Registration RestrictionPolicy Service UserName: <S: 0,30>

Specifies the user name used by the VCS to log in and query the remote service.

Example: `xConfiguration Registration RestrictionPolicy Service UserName: "user123"`

Remote Syslog [1..4] Address: <S: 0..128>

The IP address or Fully Qualified Domain Name (FQDN) of up to 4 remote syslog servers to which the log is written. These servers must support the BSD or IETF syslog protocols.

Example: `xConfiguration Remote Syslog 1 Address: "remote_server.example.com"`

Remote Syslog [1..4] Crlcheck: <On/Off>

Controls whether the certificate supplied by the syslog server is checked against the certificate revocation list (CRL). Default: Off.

Example: `xConfiguration Remote Syslog 1 Crlcheck: Off`

Remote Syslog [1..4] Format: <bsd/ietf>

The format in which remote syslog messages are written. Default: bsd.

Example: `xConfiguration Remote Syslog 1 Format: bsd`

Remote Syslog [1..4] Mode: <bsd/ietf/ietf_secure/user_defined>

Select the syslog protocol to use when sending messages to the syslog server, or choose user_defined to configure individually the transport type, port and format. Default: bsd.

Example: `xConfiguration Remote Syslog 1 Mode: bsd`

Remote Syslog [1..4] Port: <1..65535>

The UDP/TCP destination port to use. Suggested ports: UDP=514 TCP/TLS=6514. Default : 514.

Example: `xConfiguration Remote Syslog 1 Port: 514`

Remote Syslog [1..4] Transport: <udp/tcp/tls>

The transport protocol to use when communicating with the syslog server. If you use TLS encryption, you must upload a suitable CA certificate file. Default: UDP.

Example: `xConfiguration Remote Syslog 1 Transport: udp`

ResourceUsage Warning Activation Level: <0..100>

Controls if and when the VCS will warn that it is approaching its maximum licensed capacity for calls or registrations. The number represents the percentage of the maximum that, when reached, will trigger a warning. 0: Warnings will never appear. Default: 90.

Example: `xConfiguration ResourceUsage Warning Activation Level: 90`

SIP Authentication Digest Nonce ExpireDelta: <30..3600>

Specifies the maximum time (in seconds) that a nonce may be re-used for. Default: 300.

`Example: xConfiguration SIP Authentication Digest Nonce ExpireDelta: 300`

SIP Authentication Digest Nonce Length: <32..512>

Length of nonce or cnonce to generate for use in SIP Digest authentication. Default: 60.

Example: `xConfiguration SIP Authentication Digest Nonce Length: 60`

SIP Authentication Digest Nonce Limit: <1..65535>

Maximum limit on the number of nonces to store. Default: 10000.

Example: `xConfiguration SIP Authentication Digest Nonce Limit: 10000`

SIP Authentication Digest Nonce Maximum Use Count: <1..1024>

Maximum number of times that a nonce generated by the VCS may be used by a client. Default: 128.

Example: `xConfiguration SIP Authentication Digest Nonce Maximum Use Count: 128`

SIP Authentication NTLM Mode: <On/Off/Auto>

Controls when the VCS will challenge endpoints using the NTLM protocol. Default: Auto.

Off: the VCS will never send a challenge containing the NTLM protocol.

On: the VCS will always include NTLM in its challenges.

Auto: the VCS will decide based on endpoint type whether to challenge with NTLM.

Example: `xConfiguration SIP Authentication NTLM Mode: Auto`

SIP Authentication NTLM SA Lifetime: <30..43200>

Specifies the lifetime of NTLM security associations in seconds. Default: 28800.

Example: `xConfiguration SIP Authentication NTLM SA Lifetime: 28800`

SIP Authentication NTLM SA Limit: <1..65535>

Maximum number of NTLM security associations to store. Default: 10000.

Example: `xConfiguration SIP Authentication NTLM SA Limit: 10000`

SIP Authentication Retry Limit: <1..16>

The number of times a SIP UA will be challenged due to authentication failure before receiving a 403 Forbidden response. Note that this applies only to SIP Digest challenges (not NTLM challenges). Default: 3.

Example: `xConfiguration SIP Authentication Retry Limit: 3`

SIP Domain [1..200] Authzone: <S: 0,128>

The traversal zone to use when delegating credential checks for SIP messages for this domain.

Example: `xConfiguration SIP Domain 1 Authzone: "traversalzone"`

SIP Domain [1..200] Edge: <On/Off>

Whether remote and mobile collaboration features are enabled. Default Off.

Example: `xConfiguration SIP Domain 1 Edge: On`

SIP Domain [1..200] Name: <S: 0,128>

Specifies a domain for which this VCS is authoritative. The domain name can comprise multiple levels. Each level's name can only contain letters, digits and hyphens, with each level separated by a period (dot). A level name cannot start or end with a hyphen, and the final level name must start with a letter. An example valid domain name is "100.example-name.com".

Example: `xConfiguration SIP Domain 1 Name: "100.example-name.com"`

SIP Domain [1..200] Sip: <On/Off>

Specifies whether the VCS will act as a SIP registrar and Presence Server for this domain, and will accept registration requests for any SIP endpoints attempting to register with an alias that includes this domain. Default On.

Example: `xConfiguration SIP Domain 1 Sip: On`

SIP GRUU Mode: <On/Off>

Controls whether GRUU (RFC5627) support is active. Default: On.

Example: `xConfiguration SIP GRUU Mode: On`

SIP MediaRouting ICE Mode: <On/Off>

Controls whether the VCS takes the media for an ICE to non-ICE call where the ICE participant is thought to be behind a NAT device. Default: Off.

Example: `xConfiguration SIP MediaRouting ICE Mode: Off`

SIP Mode: <On/Off>

Determines whether or not the VCS will provide SIP registrar and SIP proxy functionality. This mode must be enabled in order to use either the Presence Server or the Presence User Agent. Default: On.

Example: `xConfiguration SIP Mode: On`

SIP Registration Call Remove: <Yes/No>

Specifies whether associated calls are dropped when a SIP registration expires or is removed. Default: No.

Example: `xConfiguration SIP Registration Call Remove: No`

SIP Registration Outbound Flow Timer: <0..600>

Specifies the value for the Flow-Timer header in Outbound registration responses. It defines the number of seconds after which the server will consider the registration flow to be dead if no keep-alive is sent by the user agent. Default: 0 (no header is added).

Example: `xConfiguration SIP Registration Outbound Flow Timer: 0`

SIP Registration Outbound Refresh Maximum: <30..7200>

The maximum allowed value for a SIP registration refresh period for Outbound registrations. Requests for a value greater than this will result in a lower value (calculated according to the Outbound registration refresh strategy) being returned. Default: 3600 seconds.

Example: `xConfiguration SIP Registration Outbound Refresh Maximum: 3600`

SIP Registration Outbound Refresh Minimum: <30..7200>

The minimum allowed value for a SIP registration refresh period for Outbound registrations. Requests for a value lower than this value will result in the registration being rejected with a 423 Interval Too Brief response. Default: 600 seconds.

Example: `xConfiguration SIP Registration Outbound Refresh Minimum: 600`

SIP Registration Outbound Refresh Strategy: <Maximum/Variable>

The method used to generate the SIP registration expiry period for Outbound registrations. Default: Variable.

Maximum: uses the lesser of the configured maximum refresh value and the value requested in the registration.

Variable: generates a random value between the configured minimum refresh value and the lesser of the configured maximum refresh value and the value requested in the registration.

Example: `xConfiguration SIP Registration Outbound Refresh Strategy: Variable`

SIP Registration Proxy Mode: <Off/ProxyToKnownOnly/ProxyToAny>

Specifies how proxied registrations should be handled. Default: Off.

Off: registration requests will not be proxied.

ProxyToKnownOnly: registration requests will be proxied to neighbors only.

ProxyToAny: registration requests will be proxied in accordance with the VCS's existing call processing rules.

Example: `xConfiguration SIP Registration Proxy Mode: Off`

SIP Registration Standard Refresh Maximum: <30..7200>

The maximum allowed value for a SIP registration refresh period for standard registrations. Requests for a value greater than this will result in a lower value being returned. That value is calculated according to the standard registration refresh strategy. Default: 60 seconds.

Example: `xConfiguration SIP Registration Standard Refresh Maximum: 60`

SIP Registration Standard Refresh Minimum: <30..3600>

The minimum allowed value for a SIP registration refresh period for standard registrations. Requests for a value lower than this value will result in the registration being rejected with a 423 Interval Too Brief response. Default: 45 seconds.

Example: `xConfiguration SIP Registration Standard Refresh Minimum: 45`

SIP Registration Standard Refresh Strategy: <Maximum/Variable>

The method used to generate the SIP registration expiry period for standard registrations. Default: Maximum.

Maximum: uses the lesser of the configured maximum refresh value and the value requested in the registration.

Variable: generates a random value between the configured minimum refresh value and the lesser of the configured maximum refresh value and the value requested in the registration.

Example: `xConfiguration SIP Registration Standard Refresh Strategy: Maximum`

SIP Require Duo Video Mode: <On/Off>

Controls whether the VCS requires the use of the com.tandberg.sdp.duo.enable extension for endpoints that support it. Default: On.

Example: `xConfiguration SIP Require Duo Video Mode: On`

SIP Require UDP BFCP Mode: <On/Off>

Controls whether the VCS will require the use of the com.tandberg.udp.bfcp extension for endpoints that support it. Default: On.

Example: `xConfiguration SIP Require UDP BFCP Mode: On`

SIP Routes Route [1..20] Address: <S:0,39>

Specifies the IP address of the next hop for this route, where matching SIP requests will be forwarded. Note: this command is intended for developer use only.

Example: `xConfiguration SIP Routes Route 1 Address: "127.0.0.1"`

SIP Routes Route [1..20] Authenticated: <On/Off>

Whether to forward authenticated requests. Default: Off. Note: this command is intended for developer use only.

On: only forward requests along route if incoming message has been authenticated.

Off: always forward messages that match this route.

Example: `xConfiguration SIP Routes Route 1 Authenticated: On`

SIP Routes Route [1..20] Header Name: <S:0,64>

Name of SIP header field to match (e.g. Event). Note: this command is intended for developer use only.

Example: `xConfiguration SIP Routes Route 1 Header Name: "Event"`

SIP Routes Route [1..20] Header Pattern: <S:0,128>

Regular expression to match against the specified SIP header field. Note: this command is intended for developer use only.

Example: `xConfiguration SIP Routes Route 1 Header Pattern: "(my-event-package)(.*)"`

SIP Routes Route [1..20] Method: <S:0,64>

SIP method to match to select this route (e.g. INVITE, SUBSCRIBE). Note: this command is intended for developer use only.

Example: `xConfiguration SIP Routes Route 1 Method: "SUBSCRIBE"`

SIP Routes Route [1..20] Port: <1..65534>

Specifies the port on the next hop for this route to which matching SIP requests will be routed. Default: 5060. Note: this command is intended for developer use only.

Example: `xConfiguration SIP Routes Route 1 Port: 22400`

SIP Routes Route [1..20] Request Line Pattern: <S:0,128>

Regular expression to match against the SIP request line. Note: this command is intended for developer use only.

Example: `xConfiguration SIP Routes Route 1 Request Line Pattern: ".*@(%localdomains%|%ip%)"`

SIP Routes Route [1..20] Tag: <S:0,64>

Tag value specified by external applications to identify routes that they create. Note: this command is intended for developer use only.

Example: `xConfiguration SIP Routes Route 1 Tag: "Tag1"`

SIP Routes Route [1..20] Transport: <UDP/TCP/TLS>

Determines which transport type will be used for SIP messages forwarded along this route. Default: TCP. Note: this command is intended for developer use only.

Example: `xConfiguration SIP Routes Route 1 Transport: TCP`

SIP Session Refresh Minimum: <90..7200>

The minimum value the VCS will negotiate for the session refresh interval for SIP calls. For more information see the definition of Min-SE header in RFC 4028. Default: 500.

Example: `xConfiguration SIP Session Refresh Minimum: 500`

SIP Session Refresh Value: <90..7200>

The maximum time allowed between session refresh requests for SIP calls. For more information see the definition of Session-Expires in RFC 4028. Default: 1800.

Example: `xConfiguration SIP Session Refresh Value: 1800`

SIP TCP Mode: <On/Off>

Determines whether incoming and outgoing SIP calls using the TCP protocol will be allowed. Default: On.

Example: `xConfiguration SIP TCP Mode: On`

SIP TCP Outbound Port End: <1024..65534>

Specifies the upper port in the range to be used by outbound TCP/TLS SIP connections. Default: 29999.

Example: `xConfiguration SIP TCP Outbound Port End: 29999`

SIP TCP Outbound Port Start: <1024..65534>

Specifies the lower port in the range to be used by outbound TCP/TLS SIP connections. Default: 25000.

Example: `xConfiguration SIP TCP Outbound Port Start: 25000`

SIP TCP Port: <1024..65534>

Specifies the listening port for incoming SIP TCP calls. Default: 5060.

Example: `xConfiguration SIP TCP Port: 5060`

SIP TLS Certificate Revocation Checking CRL Mode: <On/Off>

Controls whether Certificate Revocation Lists (CRLs) are used to perform certificate revocation checking. CRLs can be loaded manually onto the VCS, downloaded automatically from pre-configured URIs, or downloaded automatically from a CRL distribution point (CDP) URI contained in the X.509 certificate. Default: On.

Example: `xConfiguration SIP TLS Certificate Revocation Checking CRL Mode: On`

SIP TLS Certificate Revocation Checking CRL Network Fetch Mode: <On/Off>

Controls whether the download of CRLs from the CDP URIs contained in X.509 certificates is allowed. Default: On.

Example: `xConfiguration SIP TLS Certificate Revocation Checking CRL Network Fetch Mode: On`

SIP TLS Certificate Revocation Checking Mode: <On/Off>

Controls whether revocation checking is performed for certificates exchanged during SIP TLS connection establishment. Default: Off.

Example: `xConfiguration SIP TLS Certificate Revocation Checking Mode: Off`

SIP TLS Certificate Revocation Checking OCSP Mode: <On/Off>

Controls whether the Online Certificate Status Protocol (OCSP) may be used to perform certificate revocation checking. To use OCSP, the X.509 certificate to be checked must contain an OCSP responder URI. Default: On.

Example: `xConfiguration SIP TLS Certificate Revocation Checking OCSP Mode: On`

SIP TLS Certificate Revocation Checking Source Inaccessibility Behavior: <Ignore/Fail>

Controls the revocation checking behavior if the revocation source cannot be contacted. Default: Fail.

Fail: treat the certificate as revoked (and thus do not allow the TLS connection).

Ignore: treat the certificate as not revoked.

Example: `xConfiguration SIP TLS Certificate Revocation Checking Source Inaccessibility Behavior: Fail`

SIP TLS Mode: <On/Off>

Determines whether incoming and outgoing SIP calls using the TLS protocol will be allowed. Default: On.

Example: `xConfiguration SIP TLS Mode: On`

SIP TLS Port: <1024..65534>

Specifies the listening port for incoming SIP TLS calls. Default: 5061.

Example: `xConfiguration SIP TLS Port: 5061`

SIP UDP Mode: <On/Off>

Determines whether incoming and outgoing SIP calls using the UDP protocol will be allowed. Default: Off.

Example: `xConfiguration SIP UDP Mode: On`

SIP UDP Port: <1024..65534>

Specifies the listening port for incoming SIP UDP calls. Default: 5060.

Example: `xConfiguration SIP UDP Port: 5060`

SNMP CommunityName: <S: 0, 16>

The VCS's SNMP community name. Default: public

Example: `xConfiguration SNMP CommunityName: "public"`

SNMP SystemContact: <S: 0, 70>

The name of the person who can be contacted regarding issues with the VCS. Default: Administrator.

Example: `xConfiguration SNMP SystemContact: Administrator`

SNMP SystemLocation: <S: 0, 70>

The physical location of the system.

Example: `xConfiguration SNMP SystemLocation: "Server Room 128"`

SNMP V1Mode: <On/Off>

Enables or disables SNMP Version 1 support. Default: Off.

Example: `Configuration SNMP V1Mode: Off`

SNMP V2cMode: <On/Off>

Enables or disables SNMP Version 2c support. Default: On.

Example: `xConfiguration SNMP V2cMode: On`

SNMP V3AuthenticationMode: <On/Off>

Enables or disables SNMP Version 3 authentication. Default: On.

Example: `xConfiguration SNMP V3AuthenticationMode: On`

SNMP V3AuthenticationPassword: <S: 0,215>

Sets SNMP Version 3 authentication password. It must be at least 8 characters.

Example: `xConfiguration SNMP V3AuthenticationPassword: "password123"`

SNMP V3AuthenticationType: <MD5/SHA>

Sets SNMP Version 3 authentication type. Default: SHA.

Example: `xConfiguration SNMP V3AuthenticationType: SHA`

SNMP V3Mode: <On/Off>

Enables or disables SNMP Version 3 support. Default: On.

Example: `xConfiguration SNMPV3 Mode: On`

SNMP V3PrivacyMode: <On/Off>

Enables or disables SNMP Version 3 privacy. Default: On.

Example: `xConfiguration SNMP V3PrivacyMode: On`

SNMP V3PrivacyPassword: <S: 0,215>

Sets SNMP Version 3 privacy password. It must be at least 8 characters.

Example: `xConfiguration SNMP V3PrivacyPassword: "password123"`

SNMP V3PrivacyType: <DES/AES>

Sets SNMP Version 3 privacy type. Default: AES.

Example: `xConfiguration SNMP V3PrivacyType: AES`

SNMP V3UserName: <S: 0,70>

Sets the username to use when using SNMP V3.

Example: `xConfiguration SNMP V3UserName: "user123"`

SystemUnit Maintenance Mode: <On/Off>

Sets the VCS into maintenance mode.New calls and registrations are disallowed and existing registrations are allowed to expire. Default: Off.

Example: `xConfiguration SystemUnit Maintenance Mode: Off`

SystemUnit Name: <S:, 0, 50>

Defines the name of the VCS. The system name appears in various places in the web interface and on the front panel of the unit. Choose a name that uniquely identifies the system.

Example: `xConfiguration SystemUnit Name: "MainHQ"`

TimeZone Name: <S: 0, 64>

Sets the local time zone of the VCS. Time zone names follow the POSIX naming convention e.g. Europe/London or America/New_ York. Default: GMT.

Example: `xConfiguration TimeZone Name: "GMT"`

Transform [1..100] Description: <S: 0,64>

A free-form description of the transform.

Example: `xConfiguration Transform [1..100] Description: "Change example.net to example.com"`

Transform [1..100] Pattern Behavior: <Strip/Replace>

How the alias is modified. Default: Strip.

Strip: removes the matching prefix or suffix from the alias.

Replace: substitutes the matching part of the alias with the text in replace string.

AddPrefix: prepends the replace string to the alias.

AddSuffix: appends the replace string to the alias.

Example: `xConfiguration Transform 1 Pattern Behavior: Replace`

Transform [1..100] Pattern Replace: <S: 0, 60>

The text string to use in conjunction with the selected Pattern behavior.

Example: `xConfiguration Transform 1 Pattern Replace: "example.com"`

Transform [1..100] Pattern String: <S: 0, 60>

The pattern against which the alias is compared.

Example: `xConfiguration Transform 1 Pattern String: "example.net"`

Transform [1..100] Pattern Type: <Exact/Prefix/Suffix/Regex>

How the pattern string must match the alias for the transform to be applied. Default: Prefix.

Exact: the entire string must exactly match the alias character for character.

Prefix: the string must appear at the beginning of the alias.

Suffix: the string must appear at the end of the alias.

Regex: the string is treated as a regular expression.

Example: `xConfiguration Transform 1 Pattern Type: Suffix`

Transform [1..100] Priority: <1..65534>

Assigns a priority to the specified transform. Transforms are compared with incoming aliases in order of priority, and the priority must be unique for each transform. Default: 1 .

Example: `xConfiguration Transform 1 Priority: 10`

Transform [1..100] State: <Enabled/Disabled>

Indicates if the transform is enabled or disabled. Disabled transforms are ignored.

Example: `xConfiguration Transform 1 State: Enabled`

Traversal Media Port End: <1025..65533>

For traversal calls (where the VCS takes the media as well as the signaling), specifies the upper port in the range to use for the media. Ports are allocated from this range in pairs, the first of each being even. Thus the range must end with an odd number. Default: 59999 .

Example: `xConfiguration Traversal Media Port End: 59999`

Traversal Media Port Start: <1024..65532>

For traversal calls (where the VCS takes the media as well as the signaling), specifies the lower port in the range to use for the media. Ports are allocated from this range in pairs, the first of each being even. Thus the range must start with an even number. Default: 36000 .

Example: `xConfiguration Traversal Media Port Start: 36000`

Traversal Server H323 Assent CallSignaling Port: <1024..65534>

The port on the VCS to use for Assent signaling. Default: 2776 .

Example: `xConfiguration Traversal Server H323 Assent CallSignaling Port: 2777`

Traversal Server H323 H46018 CallSignaling Port: <1024..65534>

The port on the VCS to use for H460.18 signaling. Default: 2777 .

Example: `xConfiguration Traversal Server H323 H46018 CallSignaling Port: 2777`

Traversal Server TURN Authentication Realm: <S: 1,128>

The realm sent by the server in its authentication challenges. Default: TANDBERG .

Example: `xConfiguration Traversal Server TURN Authentication Realm: "TANDBERG"`

Traversal Server TURN Authentication Remote Mode: <On/Off>

Determines whether the server requires requests to be authenticated. When enabled the server will also authenticate its responses. Default: On.

Example: `xConfiguration Traversal Server TURN Authentication Remote Mode: On`

Traversal Server TURN Media Port End: <1024..65534>

The upper port in the range used for TURN relays. Default: 61799.

Example: `xConfiguration Traversal Server TURN Media Port End: 61799`

Traversal Server TURN Media Port Start: <1024..65534>

The lower port in the range used for TURN relays. Default: 60000.

Example: `xConfiguration Traversal Server TURN Media Port Start: 60000`

Traversal Server TURN Mode: <On/Off>

Determines whether the VCS offers TURN services to traversal clients. Default: Off .

Example: `xConfiguration Traversal Server TURN Mode: Off`

Traversal Server TURN Port: <1024..65534>

The listening port for TURN requests. Default: 3478.

Example: `xConfiguration Traversal Server TURN Port: 3478`

Traversal Server TURN PortRangeEnd: <1024..65534>

The upper port in the range used for TURN requests. Default: 3483

Example: `xConfiguration Traversal Server TURN PortRangeEnd: 3483`

Traversal Server TURN PortRangeStart: <1024..65534>

The lower port in the range used for TURN requests. Default: 3478.

Example: `xConfiguration Traversal Server TURN PortRangeStart: 3478`

Traversal Server TURN ProtocolMode: <TCP/UDP/Both>

The permitted protocols for TURN requests. Default: Both.

Example: `xConfiguration Traversal Server TURN ProtocolMode: Both`

Zones DefaultZone Authentication Mode: <DoNotCheckCredentials/TreatAsAuthenticated/CheckCredentials>

Controls how the VCS authenticates incoming messages from this zone and whether they are subsequently treated as authenticated, unauthenticated, or are rejected. The behavior varies for H.323 messages, SIP messages that originate from a local domain and SIP messages that originate from non-local domains. Default: DoNotCheckCredentials.

Example: `xConfiguration Zones DefaultZone Authentication Mode: DoNotCheckCredentials`

Zones DefaultZone SIP Media Encryption Mode: <Off/On/BestEffort/Auto>

The media encryption policy applied by the VCS for SIP calls (including interworked calls) to and from this zone. Default: Auto.

On: All media must be encrypted.

Off: All media must be unencrypted.

BestEffort: Use encryption if available otherwise fallback to unencrypted media.

Auto: No media encryption policy is applied.

Example: **xConfiguration Zones DefaultZone SIP Media Encryption Mode: Auto**

Zones DefaultZone SIP Record Route Address Type: <IP/Hostname>

Controls whether the VCS uses its IP address or host name in the record-route or path headers of outgoing SIP requests to this zone. Note: setting this value to hostname also requires a valid DNS system host name to be configured on the VCS. Default: IP.

Example: **xConfiguration Zones DefaultZone SIP Record Route Address Type: IP**

Zones DefaultZone SIP TLS Verify Mode: <On/Off>

Controls whether the hostname contained within the certificate presented by the external system is verified by the VCS. If enabled, the certificate hostname (also known as the Common Name) is checked against the patterns specified in the Default Zone access rules. Default: Off.

Example: **xConfiguration Zones DefaultZone SIP TLS Verify Mode: Off**

Zones LocalZone DefaultSubZone Authentication Mode: <DoNotCheckCredentials/TreatAsAuthenticated/CheckCredentials>

Controls how the VCS authenticates incoming messages from this subzone and whether they are subsequently treated as authenticated, unauthenticated or are rejected. The behavior varies for H.323 messages, SIP messages that originate from a local domain and SIP messages that originate from non-local domains. Default: DoNotCheckCredentials.

Example: **xConfiguration Zones LocalZone DefaultSubZone Authentication Mode: DoNotCheckCredentials**

Zones LocalZone DefaultSubZone Bandwidth PerCall Inter Limit: <1..100000000>

The bandwidth limit (in kbps) for any one call to or from an endpoint in the Default Subzone (applies only if the mode is set to Limited). Default: 1920.

Example: **xConfiguration Zones LocalZone DefaultSubZone Bandwidth PerCall Inter Limit: 1920**

Zones LocalZone DefaultSubZone Bandwidth PerCall Inter Mode: <Limited/Unlimited/NoBandwidth>

Controls if there is a limit on the bandwidth for any one call to or from an endpoint in the Default Subzone. Default: Unlimited.

NoBandwidth: no bandwidth available. No calls can be made to or from the Default Subzone.

Example: **xConfiguration Zones LocalZone DefaultSubZone Bandwidth PerCall Inter Mode: Limited**

Zones LocalZone DefaultSubZone Bandwidth PerCall Intra Limit: <1..100000000>

The bandwidth limit (in kbps) for any one call between two endpoints within the Default Subzone (applies only if the mode is set to Limited). Default: 1920.

Example: **xConfiguration Zones LocalZone DefaultSubZone Bandwidth PerCall Intra Limit: 1920**

Zones LocalZone DefaultSubZone Bandwidth PerCall Intra Mode: <Limited/Unlimited/NoBandwidth>

Controls if there is a limit on the bandwidth for any one call between two endpoints within the Default Subzone. Default: Unlimited.

NoBandwidth: no bandwidth available. No calls can be made within the Default Subzone.

Example: **xConfiguration Zones LocalZone DefaultSubZone Bandwidth PerCall Intra Mode: Limited**

Zones LocalZone DefaultSubZone Bandwidth Total Limit: <1..100000000>

Sets the total bandwidth limit (in kbps) of the Default Subzone (applies only if Mode is set to Limited). Default: 500000 .

Example: **xConfiguration Zones LocalZone DefaultSubZone Bandwidth Total Limit: 500000**

Zones LocalZone DefaultSubZone Bandwidth Total Mode: <Limited/Unlimited/NoBandwidth>

Controls if the Default Subzone has a limit on the total bandwidth being used by its endpoints at any one time. Default: Unlimited.

NoBandwidth: no bandwidth available. No calls can be made to, from, or within the Default Subzone.

Example: `xConfiguration Zones LocalZone DefaultSubZone Bandwidth Total Mode: Limited`

Zones LocalZone DefaultSubZone Registrations: <Allow/Deny>

Controls whether registrations assigned to the Default Subzone are accepted. Default: Allow.

Example: `xConfiguration Zones LocalZone DefaultSubZone Registrations: Allow`

Zones LocalZone DefaultSubZone SIP Media Encryption Mode: <Off/On/BestEffort/Auto>

The media encryption policy applied by the VCS for SIP calls (including interworked calls) to and from this subzone. Default: Auto

On: All media must be encrypted.

Off: All media must be unencrypted.

BestEffort: Use encryption if available otherwise fallback to unencrypted media.

Auto: No media encryption policy is applied.

Example: `xConfiguration Zones LocalZone DefaultSubZone SIP Media Encryption Mode: Auto`

Zones LocalZone SIP Record Route Address Type: <IP/Hostname>

Controls whether the VCS uses its IP address or host name in the record-route or path headers of outgoing SIP requests to this zone. Note: setting this value to hostname also requires a valid DNS system host name to be configured on the VCS. Default: IP.

Example: `xConfiguration Zones LocalZone SIP Record Route Address Type: IP`

Zones LocalZone SubZones MembershipRules Rule [1..3000] Description: <S: 0,64>

A free-form description of the membership rule.

Example: `xConfiguration Zones LocalZone SubZones MembershipRules Rule 1 Description: "Office-based staff"`

Zones LocalZone SubZones MembershipRules Rule [1..3000] Name: <S: 0,50>

Assigns a name to this membership rule.

Example: `xConfiguration Zones LocalZone SubZones MembershipRules Rule 1 Name: "Office Workers"`

Zones LocalZone SubZones MembershipRules Rule [1..3000] Pattern String: <S: 0,60>

Specifies the pattern against which the alias is compared.

Example: `xConfiguration Zones LocalZone SubZones MembershipRules Rule 1 Pattern String: "@example.com"`

Zones LocalZone SubZones MembershipRules Rule [1..3000] Pattern Type: <Exact/Prefix/Suffix/Regex>

The way in which the pattern must match the alias.

Example: `xConfiguration Zones LocalZone SubZones MembershipRules Rule 1 Pattern Type: Suffix`

Zones LocalZone SubZones MembershipRules Rule [1..3000] Priority: <1..65534>

Determines the order in which the rules are applied (and thus to which subzone the endpoint is assigned) if an endpoint's address satisfies multiple rules. The rules with the highest priority (1, then 2, then 3 and so on) are applied first. If multiple Subnet rules have the same priority the rule with the largest prefix length is applied first. Alias Pattern Match rules at the same priority are searched in configuration order. Default: 100.

Example: `xConfiguration Zones LocalZone SubZones MembershipRules Rule 1 Priority: 100`

Zones LocalZone SubZones MembershipRules Rule [1..3000] State: <Enabled/Disabled>

Indicates if the membership rule is enabled or disabled. Disabled membership rules are ignored. Default: Enabled.

Example: `xConfiguration Zones LocalZone SubZones MembershipRules Rule 1 State: Enabled`

Zones LocalZone SubZones MembershipRules Rule [1..3000] SubZoneName: <S: 0,50>

The subzone to which an endpoint is assigned if its address satisfies this rule.

Example: `xConfiguration Zones LocalZone SubZones MembershipRules Rule 1 SubZoneName: "Branch Office"`

Zones LocalZone SubZones MembershipRules Rule [1..3000] Subnet Address: <S: 0,39>

Specifies an IP address used (in conjunction with the prefix length) to identify this subnet.

Example: `xConfiguration Zones LocalZone SubZones MembershipRules Rule 1 Subnet Address: "192.168.0.0"`

Zones LocalZone SubZones MembershipRules Rule [1..3000] Subnet PrefixLength: <1..128>

The number of bits of the subnet address which must match for an IP address to belong in this subnet. Default: 32.

Example: `xConfiguration Zones LocalZone SubZones MembershipRules Rule 1 Subnet PrefixLength: 32`

Zones LocalZone SubZones MembershipRules Rule [1..3000] Type: <Subnet/AliasPatternMatch>

The type of address that applies to this rule.

Subnet: assigns the device if its IP address falls within the configured IP address subnet.

AliasPatternMatch: assigns the device if its alias matches the configured pattern.

Example: `xConfiguration Zones LocalZone SubZones MembershipRules Rule 1 Type: Subnet`

Zones LocalZone SubZones SubZone [1..1000] Authentication Mode: <DoNotCheckCredentials/TreatAsAuthenticated/CheckCredentials>

Controls how the VCS authenticates incoming messages from this subzone and whether they are subsequently treated as authenticated, unauthenticated or are rejected. The behavior varies for H.323 messages, SIP messages that originate from a local domain and SIP messages that originate from non-local domains. See the Administrator Guide for further information. Default: DoNotCheckCredentials.

Example: `xConfiguration Zones LocalZone SubZones SubZone 1 Authentication Mode: DoNotCheckCredentials`

Zones LocalZone SubZones SubZone [1..1000] Bandwidth PerCall Inter Limit: <1..100000000>

The bandwidth limit (in kbps) on any one call to or from an endpoint in this subzone (applies only if Mode is set to Limited). Default: 1920.

Example: `xConfiguration Zones LocalZone SubZones SubZone 1 Bandwidth PerCall Inter Limit: 1920`

Zones LocalZone SubZones SubZone [1..1000] Bandwidth PerCall Inter Mode: <Limited/Unlimited/NoBandwidth>

Determines whether there is a limit on the bandwidth for any one call to or from an endpoint in this subzone. Default: Unlimited.

NoBandwidth: no bandwidth available. No calls can be made to or from this subzone.

Example: `xConfiguration Zones LocalZone SubZones SubZone 1 Bandwidth PerCall Inter Mode: Limited`

Zones LocalZone SubZones SubZone [1..1000] Bandwidth PerCall Intra Limit: <1..100000000>

The bandwidth limit (in kbps) for any one call between two endpoints within this subzone (applies only if the mode is set to Limited). Default: 1920.

Example: `Zones LocalZone SubZones SubZone 1 Bandwidth PerCall Intra Limit: 1920`

Zones LocalZone SubZones SubZone [1..1000] Bandwidth PerCall Intra Mode: <Limited/Unlimited/NoBandwidth>

Determines whether there is a limit on the bandwidth for any one call between two endpoints within this subzone. Default: Unlimited.

NoBandwidth: no bandwidth available. No calls can be made within this subzone.

Example: `xConfiguration Zones LocalZone SubZones SubZone 1 Bandwidth PerCall Intra Mode: Limited`

Zones LocalZone SubZones SubZone [1..1000] Bandwidth Total Limit: <1..100000000>

Sets the total bandwidth limit (in kbps) of this subzone (applies only if the mode is set to Limited). Default: 500000.

Example: `xConfiguration Zones LocalZone SubZones SubZone 1 Bandwidth Total Limit: 500000`

Zones LocalZone SubZones SubZone [1..1000] Bandwidth Total Mode: <Limited/Unlimited/NoBandwidth>

Controls if this subzone has a limit on the total bandwidth of calls being used by its endpoints at any one time. Default: Unlimited.

NoBandwidth: no bandwidth available. No calls can be made to, from, or within this subzone.

Example: `xConfiguration Zones LocalZone SubZones SubZone 1 Bandwidth Total Mode: Limited`

Zones LocalZone SubZones SubZone [1..1000] Name: <S: 0, 50>

Assigns a name to this subzone.

Example: `xConfiguration Zones LocalZone SubZones SubZone 1 Name: "BranchOffice"`

Zones LocalZone SubZones SubZone [1..1000] Registrations: <Allow/Deny>

Controls whether registrations assigned to this subzone are accepted. Default: Allow.

Example: `xConfiguration Zones LocalZone SubZones SubZone 1 Registrations: Allow`

Zones LocalZone SubZones SubZone [1..1000] SIP Media Encryption Mode: <Off/On/BestEffort/Auto>

The media encryption policy applied by the VCS for SIP calls (including interworked calls) to and from this subzone. Default: Auto

On: All media must be encrypted.

Off: All media must be unencrypted.

BestEffort: Use encryption if available otherwise fallback to unencrypted media.

Auto: No media encryption policy is applied.

Example: `xConfiguration Zones LocalZone SubZones SubZone 1 SIP Media Encryption Mode: Auto`

Zones LocalZone Traversal H323 Assent Mode: <On/Off>

Determines whether or not H.323 calls using Assent mode for firewall traversal will be allowed. Applies to traversal-enabled endpoints registered directly with the VCS. Default: On .

Example: `xConfiguration Zones LocalZone Traversal H323 Assent Mode: On`

Zones LocalZone Traversal H323 H46018 Mode: <On/Off>

Controls whether H.323 calls using H460.18 mode for firewall traversal are allowed. Applies to traversal-enabled endpoints registered directly with the VCS. Default: On .

Example: `xConfiguration Zones LocalZone Traversal H323 H46018 Mode: On`

Zones LocalZone Traversal H323 H46019 Demultiplexing Mode: <On/Off>

Controls whether the VCS operates in Demultiplexing mode for calls from traversal-enabled endpoints registered directly with it. Default: Off .

On: allows use of the same two ports for all calls.

Off: each call will use a separate pair of ports for media.

Example: `xConfiguration Zones LocalZone Traversal H323 H46019 Demultiplexing Mode: Off`

Zones LocalZone Traversal H323 Preference: <Assent/H46018>

If an endpoint that is registered directly with the VCS supports both Assent and H460.18 protocols, this setting determines which the VCS uses. Default: Assent.

Example: `xConfiguration Zones LocalZone Traversal H323 Preference: Assent`

Zones LocalZone Traversal H323 TCPProbe KeepAliveInterval: <1..65534>

Sets the interval (in seconds) with which a traversal-enabled endpoint registered directly with the VCS will send a TCP probe to the VCS once a call is established, in order to keep the firewall's NAT bindings open. Default: 20 .

Example: `xConfiguration Zones LocalZone Traversal H323 TCPProbe KeepAliveInterval: 20`

Zones LocalZone Traversal H323 TCPProbe RetryCount: <1..65534>

Sets the number of times traversal-enabled endpoints registered directly with the VCS will attempt to send a TCP probe. Default: 5 .

Example: `xConfiguration Zones LocalZone Traversal H323 TCPProbe RetryCount: 5`

Zones LocalZone Traversal H323 TCPProbe RetryInterval: <1..65534>

Sets the frequency (in seconds) with which traversal-enabled endpoints registered directly with the VCS will send a TCP probe. Default: 2 .

Example: `xConfiguration Zones LocalZone Traversal H323 TCPProbe RetryInterval: 2`

Zones LocalZone Traversal H323 UDPProbe KeepAliveInterval: <1..65534>

Sets the interval (in seconds) with which a traversal-enabled endpoint registered directly with the VCS will send a UDP probe to the VCS once a call is established, in order to keep the firewall's NAT bindings open. Default: 20 .

Example: `xConfiguration Zones LocalZone Traversal H323 UDPProbe KeepAliveInterval: 20`

Zones LocalZone Traversal H323 UDPProbe RetryCount: <1..65534>

Sets the number of times traversal-enabled endpoints registered directly with the VCS will attempt to send a UDP probe. Default: 5 .

Example: `xConfiguration Zones LocalZone Traversal H323 UDPProbe RetryCount: 5`

Zones LocalZone Traversal H323 UDPProbe RetryInterval: <1..65534>

Sets the frequency (in seconds) with which traversal-enabled endpoints registered directly with the VCS will send a UDP probe. Default: 2 .

Example: `xConfiguration Zones LocalZone Traversal H323 UDPProbe RetryInterval: 2`

Zones LocalZone TraversalSubZone Bandwidth PerCall Limit: <1..100000000>

The bandwidth limit (in kbps) applied to any one traversal call being handled by the VCS (applies only if the mode is set to Limited). Default: 1920 .

Example: `xConfiguration Zones LocalZone TraversalSubZone Bandwidth PerCall Limit: 1920`

Zones LocalZone TraversalSubZone Bandwidth PerCall Mode: <Limited/Unlimited/NoBandwidth>

Determines whether there is a limit on the bandwidth of any one traversal call being handled by the VCS. Default: Unlimited.

NoBandwidth: no bandwidth available. No traversal calls can be made.

Example: `xConfiguration Zones LocalZone TraversalSubZone Bandwidth PerCall Mode: Limited`

Zones LocalZone TraversalSubZone Bandwidth Total Limit: <1..100000000>

The total bandwidth (in kbps) allowed for all traversal calls being handled by the VCS (applies only if the mode is set to Limited). Default: 500000 .

Example: `xConfiguration Zones LocalZone TraversalSubZone Bandwidth Total Limit: 500000`

Zones LocalZone TraversalSubZone Bandwidth Total Mode: <Limited/Unlimited/NoBandwidth>

Determines whether or not there is a limit to the total bandwidth of all traversal calls being handled by the VCS. Default: Unlimited.

NoBandwidth: no bandwidth available. No traversal calls can be made.

Example: `xConfiguration Zones LocalZone TraversalSubZone Bandwidth Total Mode: Limited`

Zones Policy Mode: <SearchRules/Directory>

The mode used when attempting to locate a destination. Default: SearchRules.

SearchRules: use the configured search rules to determine which zones are queried and in what order.

Directory: use the facilities of a directory service to direct the request to the correct zones.

Example: `xConfiguration Zones Policy Mode: SearchRules`

Zones Policy SearchRules Rule [1..2000] Authentication: <Yes/No>

Specifies whether this search rule applies only to authenticated search requests. Default: No.

Example: `xConfiguration Zones Policy SearchRules Rule 1 Authentication: No`

Zones Policy SearchRules Rule [1..2000] Description: <S: 0,64>

A free-form description of the search rule.

Example: `xConfiguration Zones Policy SearchRules Rule 1 Description: "Send query to the DNS zone"`

Zones Policy SearchRules Rule [1..2000] Mode: <AliasPatternMatch/AnyAlias/AnyIPAddress>

Determines whether a query is sent to the target zone. Default: AnyAlias.

AliasPatternMatch: queries the zone only if the alias matches the corresponding pattern type and string.

AnyAlias: queries the zone for any alias (but not IP address).

AnyIPAddress: queries the zone for any given IP address (but not alias).

Example: `xConfiguration Zones Policy SearchRules Rule 1 Mode: AnyAlias`

Zones Policy SearchRules Rule [1..2000] Name: <S: 0,50>

Descriptive name for the search rule.

Example: `xConfiguration Zones Policy SearchRules Rule 1 Name: "DNS lookup"`

Zones Policy SearchRules Rule [1..2000] Pattern Behavior: <Strip/Leave/Replace>

Determines whether the matched part of the alias is modified before being sent to the target zone. (Applies to Alias Pattern Match mode only.) Default: Strip.

Leave: the alias is not modified.

Strip: the matching prefix or suffix is removed from the alias.

Replace: the matching part of the alias is substituted with the text in the replace string.

Example: `xConfiguration Zones Policy SearchRules Rule 1 Pattern Behavior: Strip`

Zones Policy SearchRules Rule [1..2000] Pattern Replace: <S: 0,60>

The string to substitute for the part of the alias that matches the pattern. (Applies to Replace pattern behavior only.)

Example: `xConfiguration Zones Policy SearchRules Rule 1 Pattern Replace: "@example.net"`

Zones Policy SearchRules Rule [1..2000] Pattern String: <S: 0,60>

The pattern against which the alias is compared. (Applies to Alias Pattern Match mode only.)

Example: `xConfiguration Zones Policy SearchRules Rule 1 Pattern String: "@example.com"`

Zones Policy SearchRules Rule [1..2000] Pattern Type: <Exact/Prefix/Suffix/Regex>

How the pattern string must match the alias for the rule to be applied. (Applies to Alias Pattern Match mode only.) Default: Prefix.

Exact: the entire string must exactly match the alias character for character.

Prefix: the string must appear at the beginning of the alias.

Suffix: the string must appear at the end of the alias.

Regex: the string is treated as a regular expression.

Example: `xConfiguration Zones Policy SearchRules Rule 1 Pattern Type: Suffix`

Zones Policy SearchRules Rule [1..2000] Priority: <1..65534>

The order in the search process that this rule is applied, when compared to the priority of the other search rules. All Priority 1 search rules are applied first, followed by all Priority 2 search rules, and so on. Default: 100 .

Example: `xConfiguration Zones Policy SearchRules Rule 1 Priority: 100`

Zones Policy SearchRules Rule [1..2000] Progress: <Continue/Stop>

Specifies the ongoing search behavior if the alias matches this search rule. If 'stop' is selected, any rules with the same priority level as this rule are still applied. Default: Continue.

Continue: continue applying the remaining search rules (in priority order) until the endpoint identified by the alias is found.

Stop: do not apply any more search rules, even if the endpoint identified by the alias is not found in the target zone.

Example: `xConfiguration Zones Policy SearchRules Rule 1 Progress: Continue`

Zones Policy SearchRules Rule [1..2000] Protocol: <Any/H323/SIP>

The source protocol required for the rule to match.

Example: `xConfiguration Zones Policy SearchRules Rule 1 Protocol: Any`

Zones Policy SearchRules Rule [1..2000] Source Mode: <Any/AllZones/LocalZone/Named>

The sources of the requests for which this rule applies. Default: Any.

Any: locally registered devices, neighbor or traversal zones, and any non-registered devices.

All zones: locally registered devices plus neighbor or traversal zones.

Local Zone: locally registered devices only.

Named: A specific Zone or SubZone.

Example: `xConfiguration Zones Policy SearchRules Rule 1 Source Mode: Any`

Zones Policy SearchRules Rule [1..2000] Source Name: <S: 0..50>

The name of the source (Sub)Zone for which this rule applies.

Example: `xConfiguration Zones Policy SearchRules Rule 1 Source Name: "Local Office"`

Zones Policy SearchRules Rule [1..2000] State: <Enabled/Disabled>

Indicates if the search rule is enabled or disabled. Disabled search rules are ignored. Default: Enabled .

Example: `xConfiguration Zones Policy SearchRules Rule 1 State: Enabled`

Zones Policy SearchRules Rule [1..2000] Target Name: <S: 0,50>

The zone or policy service to query if the alias matches the search rule.

Example: `xConfiguration Zones Policy SearchRules Rule 1 Target Name: "Sales Office"`

Zones Policy SearchRules Rule [1..2000] Target Type: <Zone/PolicyService>

The type of target this search rule applies to.

Example: `xConfiguration Zones Policy SearchRules Rule 1 Target Type: Zone`

Zones Zone [1..1000] DNS IncludeAddressRecord: <On/Off>

Determines whether, if no NAPTR (SIP) or SRV (SIP and H.323) records have been found for the dialed alias via this zone, the VCS will then query for A and AAAA DNS Records. Default: Off .

Example: `xConfiguration Zones Zone 1 DNS IncludeAddressRecord: Off`

Zones Zone [1..1000] DNS Interworking SIP Audio DefaultCodec: <G711u/G711a/G722_48/G722_56/ G722_64/G722_1_16/G722_1_24/G722_1_32/G722_1_48/G723_1/G728/G729/AACLD_48/AACLD_56/ AACLD_64/AMR>

Specifies which audio codec to use when empty INVITEs are not allowed. Default: G711u .

Example: `xConfiguration Zones Zone 1 DNS Interworking SIP Audio DefaultCodec: G711u`

Zones Zone [1..1000] DNS Interworking SIP EmptyInviteAllowed: <On/Off>

Controls if the VCS will generate a SIP INVITE message with no SDP to send to this zone. INVITEs with no SDP mean that the destination device is asked to initiate the codec selection, and are used when the call has been interworked locally from H.323. Default: On.

On: SIP INVITEs with no SDP will be generated and sent to this neighbor.

Off: SIP INVITEs will be generated and a pre-configured SDP will be inserted before the INVITEs are sent to this neighbor.

Example: `xConfiguration Zones Zone 1 DNS Interworking SIP EmptyInviteAllowed: On`

Zones Zone [1..1000] DNS Interworking SIP Video DefaultBitrate: <64..65535>

Specifies which video bit rate to use when empty INVITEs are not allowed. Default: 384 .

Example: `xConfiguration Zones Zone 1 DNS Interworking SIP Video DefaultBitrate: 384`

Zones Zone [1..1000] DNS Interworking SIP Video DefaultCodec: <None/H261/H263/H263p/H263pp/H264>

Specifies which video codec to use when empty INVITEs are not allowed. Default: H263 .

Example: `xConfiguration Zones Zone 1 DNS Interworking SIP Video DefaultCodec: H263`

Zones Zone [1..1000] DNS Interworking SIP Video DefaultResolution: <None/QCIF/CIF/4CIF/SIF/4SIF/VGA/SVGA/XGA>

Specifies which video resolution to use when empty INVITEs are not allowed. Default: CIF .

Example: `xConfiguration Zones Zone 1 DNS Interworking SIP Video DefaultResolution: CIF`

Zones Zone [1..1000] DNS SIP Default Transport: <UDP/TCP/TLS>

Determines which transport type is used for SIP calls from the DNS zone, when DNS NAPTR records and SIP URI parameters do not provide the preferred transport information. RFC 3263 suggests that UDP should be used. Default: UDP.

Example: `xConfiguration Zones Zone [1..1000] DNS SIP Default Transport: UDP`

Zones Zone [1..1000] DNS SIP Duo Video Filter Mode: <On/Off>

Determines whether INVITE requests sent to this zone filter out Duo Video. This option may be required to enable interoperability with SIP devices that do not support Duo Video. Default: Off .

On: the second video line in any outgoing INVITE request is removed.

Off: INVITE requests are not modified.

Example: `xConfiguration Zones Zone 1 DNS SIP Duo Video Filter Mode: Off`

Zones Zone [1..1000] DNS SIP Media Encryption Mode: <Off/On/BestEffort/Auto>

The media encryption policy applied by the VCS for SIP calls (including interworked calls) to and from this zone. Default: Auto.

On: All media must be encrypted.

Off: All media must be unencrypted.

BestEffort: Use encryption if available otherwise fallback to unencrypted media.

Auto: No media encryption policy is applied.

Example: `xConfiguration Zones Zone 1 DNS SIP Media Encryption Mode: Auto`

Zones Zone [1..1000] DNS SIP Poison Mode: <On/Off>

Determines whether SIP requests sent out to this zone will be "poisoned" such that if they are received by the local VCS again they will be rejected. Default: Off .

On: SIP requests sent out via this zone that are received again by this VCS will be rejected.

Off: SIP requests sent out via this zone that are received by this VCS again will be processed as normal.

Example: `xConfiguration Zones Zone 1 DNS SIP Poison Mode: Off`

Zones Zone [1..1000] DNS SIP Record Route Address Type: <IP/Hostname>

Controls whether the VCS uses its IP address or host name in the record-route or path headers of outgoing SIP requests to this zone. Note: setting this value to Hostname also requires a valid DNS system host name to be configured on the VCS. Default: IP.

Example: `xConfiguration Zones Zone 1 DNS SIP Record Route Address Type: IP`

Zones Zone [1..1000] DNS SIP SDP Attribute Line Limit Length: <80..65535>

If SIP SDP attribute line limit mode is set to On, sets the maximum line length of a=fmtp SDP lines. Default: 130 .

Example: `xConfiguration Zones Zone 1 DNS SIP SDP Attribute Line Limit Length: 130`

Zones Zone [1..1000] DNS SIP SDP Attribute Line Limit Mode: <On/Off>

Determines whether requests containing SDP sent out to this zone will have the length of a=fmtp lines restricted.

On: the length will be truncated to the maximum length specified by the SIP SDP attribute line limit length setting.

Off: the length will not be truncated.

Example: `xConfiguration Zones Zone 1 DNS SIP SDP Attribute Line Limit Mode: Off`

Zones Zone [1..1000] DNS SIP SearchAutoResponse: <On/Off>

Controls what happens when the VCS receives a SIP search that originated as an H.323 search, destined for this zone. Default: Off .

Off: a SIP OPTION message will be sent to the zone.

On: searches will be responded to automatically, without being forwarded to the zone.

Example: `xConfiguration Zones Zone 1 DNS SIP SearchAutoResponse: Off`

Zones Zone [1..1000] DNS SIP TLS Verify Mode: <On/Off>

Controls X.509 certificate checking between this VCS and the destination system server returned by the DNS lookup. When enabled, the domain name submitted to the DNS lookup must be contained within the server's X.509 certificate (in either the Subject Common Name or the Subject Alternative Name attributes). Default: Off .

Example: `xConfiguration Zones Zone 1 DNS SIP TLS Verify Mode: On`

Zones Zone [1..1000] DNS SIP TLS Verify Subject Name: <S: 0..128>

The certificate holder's name to look for in the traversal client's X.509 certificate (must be in either the Subject Common Name or the Subject Alternative Name attributes). If empty then the domain portion of the resolved URI is used.

Example: `xConfiguration Zones Zone 1 DNS SIP TLS Verify Subject Name: "example.com"`

Zones Zone [1..1000] DNS SIP UDP BFCP Filter Mode: <On/Off>

Determines whether INVITE requests sent to this zone filter out UDP/BFCP. This option may be required to enable interoperability with SIP devices that do not support the UDP/BFCP protocol. Default: Off .

On: any media line referring to the UDP/BFCP protocol is replaced with TCP/BFCP and disabled.

Off: INVITE requests are not modified.

Example: `xConfiguration Zones Zone 1 DNS SIP UDP BFCP Filter Mode: Off`

Zones Zone [1..1000] DNS ZoneProfile: <Default/Custom/CiscoUnifiedCommunicationsManager/ CiscoUnifiedCommunicationsManagerBFCP/NortelCS1000/NonRegisteringDevice/LocalB2BUAService>

Determines how the zone's advanced settings are configured.

Default: uses the factory defaults.

Custom: allows you to configure each setting individually.

Preconfigured profiles: alternatively, choose one of the preconfigured profiles to automatically use the appropriate settings required for connections to that type of system.

Example: `xConfiguration Zones Zone 1 DNS ZoneProfile: Default`

Zones Zone [1..1000] ENUM DNSSuffix: <S: 0, 128>

The DNS zone to append to the transformed E.164 number to create an ENUM host name which this zone is then queried for.

Example: `xConfiguration Zones Zone 2 ENUM DNSSuffix: "e164.arpa"`

Zones Zone [1..1000] H323 Mode: <On/Off>

Determines whether H.323 calls will be allowed to and from this zone. Default: On .

Example: `xConfiguration Zones Zone 2 H323 Mode: On`

Zones Zone [1..1000] HopCount: <1..255>

Specifies the hop count to be used when sending an alias search request to this zone. Note: if the search request was received from another zone and already has a hop count assigned, the lower of the two values will be used. Default: 15 .

Example: `xConfiguration Zones Zone 2 HopCount: 15`

Zones Zone [1..1000] Name: <S: 1, 50>

Assigns a name to this zone.

Example: `xConfiguration Zones Zone 3 Name: "UK Sales Office"`

Zones Zone [1..1000] Neighbor Authentication Mode: <DoNotCheckCredentials/TreatAsAuthenticated/CheckCredentials>

Controls how the VCS authenticates incoming messages from this zone and whether they are subsequently treated as authenticated, unauthenticated, or are rejected. The behavior varies for H.323 messages, SIP messages that originate from a local domain and SIP messages that originate from non-local domains. Default: DoNotCheckCredentials.

Example: `xConfiguration Zones Zone 3 Neighbor Authentication Mode: DoNotCheckCredentials`

Zones Zone [1..1000] Neighbor H323 CallSignaling Port: <1024..65534>

The port on the neighbor to use for H.323 calls to and from this VCS. Default: 1720 .

Example: `xConfiguration Zones Zone 3 Neighbor H323 CallSignaling Port: 1720`

Zones Zone [1..1000] Neighbor H323 Port: <1024..65534>

The port on the neighbor to use for H.323 searches to and from this VCS. Default: 1719 .

Example: `xConfiguration Zones Zone 3 Neighbor H323 Port: 1719`

Zones Zone [1..1000] Neighbor H323 SearchAutoResponse: <On/Off>

Determines what happens when the VCS receives a H323 search, destined for this zone. Default: Off.

Off: an LRQ message will be sent to the zone.

On: searches will be responded to automatically, without being forwarded to the zone.

Example: `xConfiguration Zones Zone 3 Neighbor H323 SearchAutoResponse: Off`

Zones Zone [1..1000] Neighbor Interworking SIP Audio DefaultCodec: <G711u/G711a/G722_48/G722_56/G722_64/G722_1_16/G722_1_24/G722_1_32/G722_1_48/G723_1/G728/G729/AACLD_48/AACLD_56/AACLD_64/AMR>

Specifies which audio codec to use when empty INVITEs are not allowed. Default: G711u .

Example: `xConfiguration Zones Zone 3 Neighbor Interworking SIP Audio DefaultCodec: G711u`

Zones Zone [1..1000] Neighbor Interworking SIP EmptyInviteAllowed: <On/Off>

Determines whether the VCS will generate a SIP INVITE message with no SDP to send to this zone. INVITEs with no SDP mean that the destination device is asked to initiate the codec selection, and are used when the call has been interworked locally from H.323. Default: On .

On: SIP INVITEs with no SDP will be generated and sent to this neighbor.

Off: SIP INVITEs will be generated and a pre-configured SDP will be inserted before the INVITEs are sent to this neighbor.

Example: `xConfiguration Zones Zone 3 Neighbor Interworking SIP EmptyInviteAllowed: On`

Zones Zone [1..1000] Neighbor Interworking SIP Encryption EncryptSRTCP: <Yes/No>

Controls if the VCS offers encrypted SRTCP in calls to this zone. The VCS will send an INFO request. Default: No.

Example: `xConfiguration Zones Zone 3 Neighbor Interworking SIP Encryption EncryptSRTCP: No`

Zones Zone [1..1000] Neighbor Interworking SIP Search Strategy: <Options/Info>

Determines how the VCS will search for SIP endpoints when interworking an H.323 call. Default: Options .

Options: the VCS will send an OPTIONS request.

Info: the VCS will send an INFO request.

Example: `xConfiguration Zones Zone 3 Neighbor Interworking SIP Search Strategy: Options`

Zones Zone [1..1000] Neighbor Interworking SIP Video DefaultBitrate: <64..65535>

Specifies which video bit rate to use when empty INVITEs are not allowed. Default: 384 .

Example: `xConfiguration Zones Zone 3 Neighbor Interworking SIP Video DefaultBitrate: 384`

Zones Zone [1..1000] Neighbor Interworking SIP Video DefaultCodec: <None/H261/H263/H263p/H263pp/H264>

Specifies which video codec to use when empty INVITEs are not allowed. Default: H263 .

Example: `xConfiguration Zones Zone 3 Neighbor Interworking SIP Video DefaultCodec: H263`

Zones Zone [1..1000] Neighbor Interworking SIP Video DefaultResolution: <None/QCIF/CIF/4CIF/SIF/4SIF/VGA/SVGA/XGA>

Specifies which video resolution to use when empty INVITEs are not allowed. Default: CIF .

Example: `xConfiguration Zones Zone 3 Neighbor Interworking SIP Video DefaultResolution: CIF`

Zones Zone [1..1000] Neighbor Monitor: <Yes/No>

Specifies whether the zone monitors the aliveness of its neighbor peers. H323 LRQs and/or SIP OPTIONS will be periodically sent to the peers. If any peer fails to respond, that peer will be marked as inactive. If no peer manages to respond the zone will be marked as inactive. Default: Yes.

Example: `xConfiguration Zones Zone 3 Neighbor Monitor: Yes`

Zones Zone [1..1000] Neighbor Peer [1..6] Address: <S:0,128>

Specifies the IP address or Fully Qualified Domain Name (FQDN) of the neighbor. If the neighbor zone is a VCS cluster, this will be one of the peers in that cluster.

Example: `xConfiguration Zones Zone 3 Neighbor Peer 1 Address: "192.44.0.18"`

Zones Zone [1..1000] Neighbor Registrations: <Allow/Deny>

Controls whether proxied SIP registrations routed through this zone are accepted. Default: Allow .

Example: `xConfiguration Zones Zone 3 Neighbor Registrations: Allow`

Zones Zone [1..1000] Neighbor SIP Authentication Trust Mode: <On/Off>

Controls if authenticated SIP messages (ones containing a P-Asserted-Identity header) from this zone are trusted. Default: Off .

On: messages are trusted without further challenge.

Off: messages are challenged for authentication.

Example: `xConfiguration Zones Zone 3 Neighbor SIP Authentication Trust Mode: On`

Zones Zone [1..1000] Neighbor SIP B2BUA Service Identifier: <0..64>

The identifier that represents an instance of a local SIP Back-to-Back User Agent service.

Example: `xConfiguration Zones Zone 3 Neighbor SIP B2BUA Service Identifier: 1`

Zones Zone [1..1000] Neighbor SIP ClassFiveResponseLiveness: <Yes/No>

Specifies whether Class 5 SIP responses from neighbor peers result in the zone being considered alive for use. Default: Yes.

Example: `xConfiguration Zones Zone 3 Neighbor SIP ClassFiveResponseLiveness: Yes`

Zones Zone [1..1000] Neighbor SIP Duo Video Filter Mode: <On/Off>

Determines whether INVITE requests sent to this zone filter out Duo Video. This option may be required to enable interoperability with SIP devices that do not support Duo Video. Default: Off.

On: the second video line in any outgoing INVITE request is removed.

Off: INVITE requests are not modified.

Example: `xConfiguration Zones Zone 3 Neighbor SIP Duo Video Filter Mode: Off`

Zones Zone [1..1000] Neighbor SIP Encryption Mode: <Auto/Microsoft/Off>

Determines how the VCS handles encrypted SIP calls on this zone. Default: Auto.

Auto: SIP calls are encrypted if a secure SIP transport (TLS) is used.

Microsoft: SIP calls are encrypted using MS-SRTP.

Off: SIP calls are never encrypted.

Example: `xConfiguration Zones Zone 3 Neighbor SIP Encryption Mode: Auto`

Zones Zone [1..1000] Neighbor SIP MIME Strip Mode: <On/Off>

Controls whether multipart MIME stripping is performed on requests from this zone. This must be set to On for connections to a Microsoft Office Communications Server 2007. Default: Off .

Example: `xConfiguration Zones Zone 3 Neighbor SIP MIME Strip Mode: Off`

Zones Zone [1..1000] Neighbor SIP Media Encryption Mode: <Off/On/BestEffort/Auto>

The media encryption policy applied by the VCS for SIP calls (including interworked calls) to and from this zone. Default: Auto

On: All media must be encrypted.

Off: All media must be unencrypted.

BestEffort: Use encryption if available otherwise fallback to unencrypted media.

Auto: No media encryption policy is applied.

Example: **xConfiguration Zones Zone 3 Neighbor SIP Media Encryption Mode: Auto**

Zones Zone [1..1000] Neighbor SIP MediaRouting Mode: <Auto/Signaled/Latching>

How the VCS handles media for calls to and from this neighbor, and where it will forward the media destined for this neighbor. Default: Auto. .

Signaled: media is always taken for calls to and from this neighbor. It will be forwarded as signaled in the SDP received from this neighbor.

Latching: media is always taken for calls to and from this neighbor. It will be forwarded to the IP address and port from which media from this neighbor is received.

Auto: media is only taken if the call is a traversal call. If this neighbor is behind a NAT the VCS will forward the media to the IP address and port from which media from this zone is received (latching). Otherwise it will forward the media to the IP address and port signaled in the SDP (signaled).

Example: **xConfiguration Zones Zone 3 Neighbor SIP MediaRouting Mode: Auto**

Zones Zone [1..1000] Neighbor SIP Poison Mode: <On/Off>

Controls whether SIP requests sent out to this zone will be "poisoned" such that if they are received by the local VCS again they will be rejected. Default: Off .

On: SIP requests sent out via this zone that are received again by this VCS will be rejected.

Off: SIP requests sent out via this zone that are received by this VCS again will be processed as normal.

Example: **xConfiguration Zones Zone 3 Neighbor SIP Poison Mode: Off**

Zones Zone [1..1000] Neighbor SIP Port: <1024..65534>

Specifies the port on the neighbor to be used for SIP calls to and from this VCS. Default: 5061 .

Example: **xConfiguration Zones Zone 3 Neighbor SIP Port: 5061**

Zones Zone [1..1000] Neighbor SIP ProxyRequire Strip List: <S: 0,255>

A comma separated list of option tags to search for and remove from Proxy-Require headers in SIP requests received from this zone. By default, no option tags are specified.

Example: **xConfiguration Zones Zone 3 Neighbor SIP ProxyRequire Strip List: "com.example.something,com.example.somethingelse"**

Zones Zone [1..1000] Neighbor SIP RFC3327 Enabled: <Yes/No>

Controls whether the VCS will insert RFC3327 Path headers when proxying REGISTER messages toward this zone. If disabled the VCS will instead rewrite the contact header to allow interworking with SIP registrars that do not support RFC3327. Default: Yes.

Example: **xConfiguration Zones Zone [1..1000] Neighbor SIP RFC3327 Enabled: Yes**

Zones Zone [1..1000] Neighbor SIP Record Route Address Type: <IP/Hostname>

Controls whether the VCS uses its IP address or host name in the record-route or path headers of outgoing SIP requests to this zone. Note: setting this value to Hostname also requires a valid DNS system host name to be configured on the VCS. Default: IP.

Example: **xConfiguration Zones Zone 3 Neighbor SIP Record Route Address Type: IP**

Zones Zone [1..1000] Neighbor SIP SDP Attribute Line Limit Length: <80..65535>

If SIP SDP attribute line limit mode is set to On, sets the maximum line length of a=fmtp SDP lines. Default: 130 .

Example: **xConfiguration Zones Zone 3 Neighbor SIP SDP Attribute Line Limit Length: 130**

Zones Zone [1..1000] Neighbor SIP SDP Attribute Line Limit Mode: <On/Off>

Determines whether requests containing SDP sent out to this zone will have the length of a=fmtp lines restricted. Default: Off .

On: the length will be truncated to the maximum length specified by the SIP SDP attribute line limit length setting.

Off: the length will not be truncated.

Example: **xConfiguration Zones Zone 3 Neighbor SIP SDP Attribute Line Limit Mode: Off**

Zones Zone [1..1000] Neighbor SIP SearchAutoResponse: <On/Off>

Controls what happens when the VCS receives a SIP search that originated as an H.323 search, destined for this zone. Default: Off .

Off: a SIP OPTION message will be sent to the zone.

On: searches will be responded to automatically, without being forwarded to the zone.

Example: **xConfiguration Zones Zone 3 Neighbor SIP SearchAutoResponse: Off**

Zones Zone [1..1000] Neighbor SIP TLS Verify Mode: <On/Off>

Controls X.509 certificate checking and mutual authentication for inbound and outbound connections between this VCS and the neighbor system. When enabled, the neighbor system's FQDN or IP address, as specified in the Peer address field, must be contained within the neighbor's X.509 certificate (in either the Subject Common Name or the Subject Alternative Name attributes). Default: Off .

Example: **xConfiguration Zones Zone 3 Neighbor SIP TLS Verify Mode: On**

Zones Zone [1..1000] Neighbor SIP Transport: <UDP/TCP/TLS>

Determines which transport type will be used for SIP calls to and from this neighbor. Default: TLS .

Example: **xConfiguration Zones Zone 3 Neighbor SIP Transport: TLS**

Zones Zone [1..1000] Neighbor SIP UDP BFCP Filter Mode: <On/Off>

Determines whether INVITE requests sent to this zone filter out UDP/BFCP. This option may be required to enable interoperability with SIP devices that do not support the UDP/BFCP protocol. Default: Off .

On: any media line referring to the UDP/BFCP protocol is replaced with TCP/BFCP and disabled.

Off: INVITE requests are not modified.

Example: **xConfiguration Zones Zone 3 Neighbor SIP UDP BFCP Filter Mode: Off**

Zones Zone [1..1000] Neighbor SIP UPDATE Strip Mode: <On/Off>

Determines whether the VCS strips the UPDATE method from the Allow header of all requests and responses going to and from this zone. Default: Off .

Example: **xConfiguration Zones Zone 3 Neighbor SIP UPDATE Strip Mode: Off**

Zones Zone [1..1000] Neighbor SignalingRouting Mode: <Auto/Always>

Specifies how the VCS handles the signaling for calls to and from this neighbor. Default: Auto.

Auto: Signaling will be taken as determined by the Call Routed Mode configuration.

Always: Signaling will always be taken for calls to or from this neighbor, regardless of the Call Routed Mode configuration.

Example: **xConfiguration Zones Zone 3 Neighbor SignalingRouting Mode: Auto**

Zones Zone [1..1000] Neighbor ZoneProfile: <Default/Custom/CiscoUnifiedCommunicationsManager/ CiscoUnifiedCommunicationsManagerBFCP/NortelCS1000/NonRegisteringDevice/LocalB2BUAService>

Determines how the zone's advanced settings are configured.

Default: uses the factory defaults.

Custom: allows you to configure each setting individually.

Preconfigured profiles: alternatively, choose one of the preconfigured profiles to automatically use the appropriate settings required for connections to that type of system.

Example: **xConfiguration Zones Zone 3 Neighbor ZoneProfile: Default**

Zones Zone [1..1000] SIP Mode: <On/Off>

Determines whether SIP calls will be allowed to and from this zone. Default: On.

Example: `xConfiguration Zones Zone 3 SIP Mode: On`

Zones Zone [1..1000] TraversalClient Accept Delegated Credential Checks: <On/Off>

Controls whether this traversal client accepts delegated credential checking requests from the VCS Expressway. Default: Off.

Off: reject the requests.

On: accept the requests and perform the credential checking using the authentication methods configured on this VCS.

Example: `xConfiguration Zones Zone [1..1000] TraversalClient Accept Delegated Credential Checks: Off`

Zones Zone [1..1000] TraversalClient Authentication Mode: <DoNotCheckCredentials/TreatAsAuthenticated/CheckCredentials>

Controls how the VCS authenticates incoming messages from this zone and whether they are subsequently treated as authenticated, unauthenticated, or are rejected. The behavior varies for H.323 messages, SIP messages that originate from a local domain and SIP messages that originate from non-local domains. Default: DoNotCheckCredentials.

Example: `xConfiguration Zones Zone 4 TraversalClient Authentication Mode: DoNotCheckCredentials`

Zones Zone [1..1000] TraversalClient Authentication Password: <S: 0,215>

The password used by the VCS when connecting to the traversal server. The maximum plaintext length is 128 characters, which is then encrypted.

Example: `xConfiguration Zones Zone 4 TraversalClient Authentication Password: "password123"`

Zones Zone [1..1000] TraversalClient Authentication UserName: <S: 0,128>

The user name used by the VCS when connecting to the traversal server.

Example: `xConfiguration Zones Zone 4 TraversalClient Authentication UserName: "clientname"`

Zones Zone [1..1000] TraversalClient H323 Port: <1024..65534>

The port on the traversal server to use for H.323 firewall traversal calls from this VCS. If the traversal server is a VCS Expressway, this must be the port number that is configured on the VCS Expressway's traversal server zone associated with this VCS.

Example: `xConfiguration Zones Zone 4 TraversalClient H323 Port: 2777`

Zones Zone [1..1000] TraversalClient H323 Protocol: <Assent/H46018>

Determines which of the two firewall traversal protocols will be used for calls to and from the traversal server. Note: the same protocol must be set on the server for calls to and from this traversal client. Default: Assent.

Example: `xConfiguration Zones Zone 4 TraversalClient H323 Protocol: Assent`

Zones Zone [1..1000] TraversalClient Peer [1..6] Address: <S:0,128>

Specifies the IP address or Fully Qualified Domain Name (FQDN) of the traversal server. If the traversal server is a VCS Expressway cluster, this will be one of the peers in that cluster.

Example: `xConfiguration Zones Zone 4 TraversalClient Peer 1 Address: "10.192.168.1"`

Zones Zone [1..1000] TraversalClient Registrations: <Allow/Deny>

Controls whether proxied SIP registrations routed through this zone are accepted. Default: Allow.

Example: `xConfiguration Zones Zone 4 TraversalClient Registrations: Allow`

Zones Zone [1..1000] TraversalClient RetryInterval: <1..65534>

The interval (in seconds) with which a failed attempt to establish a connection to the traversal server should be retried. Default: 120.

Example: `xConfiguration Zones Zone 4 TraversalClient RetryInterval: 120`

Zones Zone [1..1000] TraversalClient SIP Media Encryption Mode: <Off/On/BestEffort/Auto>

The media encryption policy applied by the VCS for SIP calls (including interworked calls) to and from this zone. Default: Auto.

On: All media must be encrypted.

Off: All media must be unencrypted.

BestEffort: Use encryption if available otherwise fallback to unencrypted media.

Auto: No media encryption policy is applied.

Example: `xConfiguration Zones Zone 4 TraversalClient SIP Media Encryption Mode: Auto`

Zones Zone [1..1000] TraversalClient SIP Poison Mode: <On/Off>

Controls whether SIP requests sent out to this zone are "poisoned" such that if they are received by the local VCS again they will be rejected. Default: Off .

On: SIP requests sent out via this zone that are received again by this VCS will be rejected.

Off: SIP requests sent out via this zone that are received by this VCS again will be processed as normal.

Example: `xConfiguration Zones Zone 4 TraversalClient SIP Poison Mode: Off`

Zones Zone [1..1000] TraversalClient SIP Port: <1024..65534>

Specifies the port on the traversal server to be used for SIP calls from this VCS. If your traversal server is a VCS Expressway, this must be the port number that has been configured in the traversal server zone for this VCS.

Example: `xConfiguration Zones Zone 4 TraversalClient SIP Port: 5061`

Zones Zone [1..1000] TraversalClient SIP Protocol: <Assent/TURN/ICE>

Determines which firewall traversal protocol will be used for SIP calls to and from the traversal server. Note: the same protocol must be set on the server for calls to and from this traversal client. Default: Assent.

Example: `xConfiguration Zones Zone 4 TraversalClient SIP Protocol: Assent`

Zones Zone [1..1000] TraversalClient SIP TLS Verify Mode: <On/Off>

Controls X.509 certificate checking and mutual authentication between this VCS and the traversal server. When enabled, the server's FQDN or IP address, as specified in the Peer address field, must be contained within the server's X.509 certificate (in either the Subject Common Name or the Subject Alternative Name attributes). Default: Off .

Example: `xConfiguration Zones Zone 4 TraversalClient SIP TLS Verify Mode: On`

Zones Zone [1..1000] TraversalClient SIP Transport: <TCP/TLS>

Determines which transport type will be used for SIP calls to and from the traversal server. Default: TLS .

Example: `xConfiguration Zones Zone 4 TraversalClient SIP Transport: TLS`

Zones Zone [1..1000] TraversalServer Authentication Mode: <DoNotCheckCredentials/TreatAsAuthenticated/CheckCredentials>

Controls how the VCS authenticates incoming messages from this zone and whether they are subsequently treated as authenticated, unauthenticated, or are rejected. The behavior varies for H.323 messages, SIP messages that originate from a local domain and SIP messages that originate from non-local domains. Default: DoNotCheckCredentials.

Example: `xConfiguration Zones Zone 5 TraversalServer Authentication Mode: DoNotCheckCredentials`

Zones Zone [1..1000] TraversalServer Authentication UserName: <S: 0,128>

The name used by the traversal client when authenticating with the traversal server. If the traversal client is a VCS, this must be the VCS's authentication user name. If the traversal client is a gatekeeper, this must be the gatekeeper's System Name.

Example: `xConfiguration Zones Zone 5 TraversalServer Authentication UserName: "User123"`

Zones Zone [1..1000] TraversalServer H323 H46019 Demultiplexing Mode: <On/Off>

Determines whether the VCS will operate in demultiplexing mode for calls from the traversal client. Default: Off .

On: allows use of the same two ports for all calls.

Off: each call will use a separate pair of ports for media.

Example: `xConfiguration Zones Zone 5 TraversalServer H323 H46019 Demultiplexing Mode: Off`

Zones Zone [1..1000] TraversalServer H323 Port: <1024..65534>

Specifies the port on the VCS being used for H.323 firewall traversal from this traversal client. Default: 6001, incrementing by 1 for each new zone.

Example: `xConfiguration Zones Zone 5 TraversalServer H323 Port: 2777`

Zones Zone [1..1000] TraversalServer H323 Protocol: <Assent/H46018>

Determines which of the two firewall traversal protocols will be used for calls to and from the traversal client. Note: the same protocol must be set on the client for calls to and from this traversal server. Default: Assent .

Example: `xConfiguration Zones Zone 5 TraversalServer H323 Protocol: Assent`

Zones Zone [1..1000] TraversalServer Registrations: <Allow/Deny>

Controls whether proxied SIP registrations routed through this zone are accepted. Default: Allow .

Example: `xConfiguration Zones Zone 5 TraversalServer Registrations: Allow`

Zones Zone [1..1000] TraversalServer SIP Media Encryption Mode: <Off/On/BestEffort/Auto>

The media encryption policy applied by the VCS for SIP calls (including interworked calls) to and from this zone. Default: Auto

On: All media must be encrypted.

Off: All media must be unencrypted.

BestEffort: Use encryption if available otherwise fallback to unencrypted media.

Auto: No media encryption policy is applied.

Example: `xConfiguration Zones Zone 5 TraversalServer SIP Media Encryption Mode: Auto`

Zones Zone [1..1000] TraversalServer SIP Poison Mode: <On/Off>

Controls whether SIP requests sent out to this zone are "poisoned" such that if they are received by the local VCS again they will be rejected. Default: Off .

On: SIP requests sent out via this zone that are received again by this VCS will be rejected.

Off: SIP requests sent out via this zone that are received by this VCS again will be processed as normal.

Example: `xConfiguration Zones Zone 5 TraversalServer SIP Poison Mode: Off`

Zones Zone [1..1000] TraversalServer SIP Port: <1024..65534>

The port on the VCS being used for SIP firewall traversal from this traversal client. Default: 7001, incrementing by 1 for each new zone.

Example: `xConfiguration Zones Zone 5 TraversalServer SIP Port: 5061`

Zones Zone [1..1000] TraversalServer SIP Protocol: <Assent/TURN/ICE>

Determines which firewall traversal protocol will be used for SIP calls to and from the traversal client. Note: the same protocol must be set on the client for calls to and from this traversal server. Default: Assent.

Example: `xConfiguration Zones Zone 5 TraversalServer SIP Protocol: Assent`

Zones Zone [1..1000] TraversalServer SIP TLS Verify Mode: <On/Off>

Controls X.509 certificate checking and mutual authentication between this VCS and the traversal client. If enabled, a TLS verify subject name must be specified. Default: Off.

Example: `xConfiguration Zones Zone 5 TraversalServer SIP TLS Verify Mode: On`

Zones Zone [1..1000] TraversalServer SIP TLS Verify Subject Name: <S: 0,128>

The certificate holder's name to look for in the traversal client's X.509 certificate (must be in either the Subject Common Name or the Subject Alternative Name attributes).

Example: `xConfiguration Zones Zone 5 TraversalServer SIP TLS Verify Subject Name: "myclientname"`

Zones Zone [1..1000] TraversalServer SIP Transport: <TCP/TLS>

Determines which of the two transport types will be used for SIP calls between the traversal client and VCS. Default: TLS .

Example: `xConfiguration Zones Zone 5 TraversalServer SIP Transport: TLS`

Zones Zone [1..1000] TraversalServer TCPProbe KeepAliveInterval: <1..65534>

Sets the interval (in seconds) with which the traversal client will send a TCP probe to the VCS once a call is established, in order to keep the firewall's NAT bindings open. Default: 20.

Example: `xConfiguration Zones Zone 5 TraversalServer TCPProbe KeepAliveInterval: 20`

Zones Zone [1..1000] TraversalServer TCPProbe RetryCount: <1..65534>

Sets the number of times the traversal client will attempt to send a TCP probe to the VCS. Default: 5 .

Example: `xConfiguration Zones Zone 5 TraversalServer TCPProbe RetryCount: 5`

Zones Zone [1..1000] TraversalServer TCPProbe RetryInterval: <1..65534>

Sets the frequency (in seconds) with which the traversal client will send a TCP probe to the VCS. Default: 2 .

Example: `xConfiguration Zones Zone 5 TraversalServer TCPProbe RetryInterval: 2`

Zones Zone [1..1000] TraversalServer UDPProbe KeepAliveInterval: <1..65534>

Sets the interval (in seconds) with which the traversal client will send a UDP probe to the VCS once a call is established, in order to keep the firewall's NAT bindings open. Default: 20.

Example: `xConfiguration Zones Zone 5 TraversalServer UDPProbe KeepAliveInterval: 20`

Zones Zone [1..1000] TraversalServer UDPProbe RetryCount: <1..65534>

Sets the number of times the traversal client will attempt to send a UDP probe to the VCS. Default: 5.

Example: `xConfiguration Zones Zone 5 TraversalServer UDPProbe RetryCount: 5`

Zones Zone [1..1000] TraversalServer UDPProbe RetryInterval: <1..65534>

Sets the frequency (in seconds) with which the traversal client will send a UDP probe to the VCS. Default: 2.

Example: `xConfiguration Zones Zone 5 TraversalServer UDPProbe RetryInterval: 2`

Zones Zone [1..1000] Type: <Neighbor/TraversalClient/TraversalServer/ENUM/DNS>

Determines the nature of the specified zone, in relation to the local VCS.

Neighbor: the new zone will be a neighbor of the local VCS.

TraversalClient: there is a firewall between the zones, and the local VCS is a traversal client of the new zone.

TraversalServer: there is a firewall between the zones and the local VCS is a traversal server for the new zone.

ENUM: the new zone contains endpoints discoverable by ENUM lookup.

DNS: the new zone contains endpoints discoverable by DNS lookup.

Example: `xConfiguration Zones Zone 3 Type: Neighbor`

Command reference — xCommand

The **xCommand** group of commands are used to add and delete items and issue system commands.

The following section lists all the currently available **xCommand** commands.

To issue a command, type the command as shown, followed by one or more of the given parameters and values. The valid values for each parameter are indicated in the angle brackets following each parameter, using the following notation:

Format	Meaning
<0..63>	Indicates an integer value is required. The numbers indicate the minimum and maximum value. In this example the value must be in the range 0 to 63.
<S: 7,15>	An **S** indicates a string value, to be enclosed in quotation marks, is required. The numbers indicate the minimum and maximum number of characters for the string. In this example the string must be between 7 and 15 characters long.
<Off/Direct/Indirect>	Lists the set of valid values for the command. Do not enclose the value in quotation marks
(r)	(r) indicates that this is a required parameter. Note that the (r) is not part of the command itself.

To obtain information about using each of the **xCommand** commands from within the CLI, type:

- **xCommand** or **xCommand ?** to return a list of all available **xCommand** commands.
- **xCommand ??** to return all current **xCommand** commands, along with a description of each command, a list of its parameters, and for each parameter its valuespaces and description.
- **xCommand <command> ?** to return a description of the command, a list of its parameters, and for each parameter its valuespaces and description.

xCommand commands

All of the available **xCommand** commands are listed in the table below:

AdminAccountAdd

Adds a local administrator account.

Name(r): <S: 0, 128>

The username for this account.

Password(r): <Password>

The password for this account.

AccessAPI: <On/Off>

Whether this account is allowed to access the system's status and configuration via the API. Default: On.

AccessWeb: <On/Off>

Whether this account is allowed to log in to the system using the web interface. Default: On.

Enabled: <On/Off>

Indicates if the account is enabled or disabled. Access is denied to disabled accounts. Default: On.

Example: **xCommand AdminAccountAdd Name: "bob_smith" Password: "abcXYZ_123" AccessAPI: On AccessWeb: On Enabled: On**

AdminAccountDelete

Deletes a local administrator account.

Name(r): <S: 0, 128>

The username of the account to delete.

Example: **`xCommand AdminAccountDelete: "bob_smith"`**

AdminGroupAdd

Name(r): <S: 0, 128>

The name of the administrator group.

AccessAPI: <On/Off>

Whether members of this group are allowed to access the system's status and configuration using the API. Default: On.

AccessWeb: <On/Off>

Whether members of this group are allowed to log in to the system using the web interface. Default: On.

Enabled: <On/Off>

Indicates if the group is enabled or disabled. Access is denied to members of disabled groups. Default: On.

Example: **`xCommand AdminGroupAdd Name: "administrators" AccessAPI: On AccessWeb: On Enabled: On`**

AdminGroupDelete

Deletes an administrator group.

Name(r): <S: 0, 128>

The name of the group to delete.

Example: **`xCommand AdminGroupDelete: "administrators"`**

AdsDcAdd

Adds a new Active Directory server.

ActiveDirectoryAddress(r): <S: 0,39>

The address of a domain controller that can be used when the VCS joins the AD domain. Not specifying a specific AD will result the use of DNS SRV queries to find an AD.

Example: **`xCommand AdsDcAdd ActiveDirectoryAddress: "192.168.0.0"`**

AdsDcDelete

Deletes an Active Directory server.

ActiveDirectoryId(r): <1..5>

The index of the Active Directory server to be deleted.

Example: **`xCommand AdsDcDelete ActiveDirectoryId: 1`**

AdsKdcAdd

Adds a new Kerberos KDC.

KerberosKDCAddress(r): <S: 0,39>

The address of a Kerberos Distribution Center (KDC) to be used when connected to the AD domain. Not specifying a specific KDC will result in the use of DNS SRV queries to find a KDC.

KerberosKDCPort: <1..65534>

Specifies the port of a KDC that can be used when the VCS joins the AD domain. Default: 88

Example: **`xCommand AdsKdcAdd KerberosKDCAddress: "192.168.0.0" KerberosKDCPort: 88`**

AdsKdcDelete

Deletes a configured Kerberos KDC.

KerberosKDCId(r): <1..5>

The index of the Kerberos KDC to be deleted.

Example: **xCommand AdsKdcDelete KerberosKDCId: 1**

AllowListAdd

Adds an entry to the Allow List.

PatternString(r): <S: 1, 60>

Specifies an entry to be added to the Allow List. If one of an endpoint's aliases matches one of the patterns in the Allow List, the registration will be permitted.

PatternType: <Exact/Prefix/Suffix/Regex>

Specifies whether the entry in the Allow List is a prefix, suffix, regular expression, or must be matched exactly. *Exact*: the string must match the alias character for character. *Prefix*: the string must appear at the beginning of the alias. *Suffix*: the string must appear at the end of the alias. *Regex*: the string will be treated as a regular expression.
Default: Exact.

Description: <S: 0,64>

A free-form description of the Allow List rule.

Example: **xCommand AllowListAdd PatternString: "John.Smith@example.com" PatternType: Exact Description: "Allow John Smith"**

AllowListDelete

Deletes an entry from the Allow List.

AllowListId(r): <1..2500>

The index of the entry to be deleted.

Example: **xCommand AllowListDelete AllowListId: 2**

Boot

Reboots the VCS.

This command has no parameters.

Example: **xCommand boot**

CheckBandwidth

A diagnostic tool that returns the status and route (as a list of nodes and links) that a call of the specified type and bandwidth would take between two nodes. Note that this command does not change any existing system configuration.

Node1(r): <S: 1, 50>

The subzone or zone from which the call originates.

Node2(r): <S: 1, 50>

The subzone or zone at which the call terminates.

Bandwidth(r): <1..100000000>

The requested bandwidth of the call (in kbps).

CallType(r): <Traversal/NonTraversal>

Whether the call type is Traversal or Non-traversal.

Example: **xCommand CheckBandwidth Node1: "DefaultSubzone" Node2: "UK Sales Office" Bandwidth: 512 CallType: nontraversal**

CheckPattern

A diagnostic tool that allows you to check the result of an alias transform (local or zone) before you configure it on the system.

Target(r): <S: 1, 60>

The alias you want to use to test the pattern match or transform.

Pattern(r): <S: 1, 60>

The pattern against which the alias is compared.

Type(r): <Exact/Prefix/Suffix/Regex>

How the pattern string must match the alias for the pattern behavior to be applied.

Behavior(r): <Strip/Leave/Replace/AddPrefix/AddSuffix>

How the alias is modified.

Replace: <S: 0, 60>

The text string to use in conjunction with the selected Pattern behavior.

Example: **`xCommand CheckPattern Target: "bob@a.net" Pattern: "@a.net" Type: "suffix" Behavior: replace Replace: "@a.com"`**

ClearAllStatus

Clears all status and history on the system.

Example: **`xCommand ClearAllStatus`**

Cucmconfigadd

Performs a lookup on a Unified CM publisher.

Address(r): <Value>

The FQDN or IP address of the Unified CM publisher.

Axlpassword(r): <Value>

The password used by the VCS to access the Unified CM publisher.

Axlusername(r): <Value>

The user name used by the VCS to access the Unified CM publisher.

CertValidationDisabled: <On/Off>

Controls X.509 certificate checking against the certificate presented by the Unified CM publisher. Default: On

Example: **`xCommand Cucmconfigadd Address: "cucm.example.com" Axlpassword: "xyz" Axlusername: "abc"`**

Cucmconfigdelete

Deletes the details of a Unified CM publisher.

Address(r): <Value>

The FQDN or IP address of the Unified CM publisher.

Example: **`xCommand Cucmconfigdelete Address: "cucm.example.com"`**

DefaultLinksAdd

Restores links between the Default Subzone, Traversal Subzone and the Default Zone.

This command has no parameters.

Example: **`xCommand DefaultLinksAdd`**

DenyListAdd

Adds an entry to the Deny List.

PatternString(r): <S: 1, 60>

Specifies an entry to be added to the Deny List. If one of an endpoint's aliases matches one of the patterns in the Deny List, the registration will not be permitted.

PatternType: <Exact/Prefix/Suffix/Regex>

Specifies whether the entry in the Deny List is a prefix, suffix, regular expression, or must be matched exactly. *Exact*: the string must match the alias character for character. *Prefix*: the string must appear at the beginning of the alias. Suffix: the string must appear at the end of the alias. *Regex*: the string will be treated as a regular expression.
Default: Exact.

Description: <S: 0, 64>

A free-form description of the Deny List rule.

Example: **`xCommand DenyListAdd PatternString: "sally.jones@example.com" PatternType: exact Description: "Deny Sally Jones"`**

DenyListDelete

Deletes an entry from the Deny List.

DenyListId(r): <1..2500>

The index of the entry to be deleted.

Example: **`xCommand DenyListDelete DenyListId: 2`**

DisconnectCall

Disconnects a call.

Call: <1..1000>

The index of the call to be disconnected.

CallSerialNumber: <S: 1, 255>

The serial number of the call to be disconnected. You must specify either a call index or a call serial number.

Example: **`xCommand DisconnectCall CallSerialNumber: "6d843434-211c-11b2-b35d-0010f30f521c"`**

Dnslookup

Queries DNS for a supplied hostname.

Hostname: <Value>

The name of the host you want to query.

RecordType: <all/a/aaaa/srv/naptr>

The type of record you want to search for. If not specified, all record types are returned.

Example: **`xCommand Dnslookup Hostname: "example.com" RecordType: all`**

DNSPerDomainServerAdd

Adds a DNS server to use only for resolving hostnames for specific domains.

Address(r): <Value>

The IP address of the DNS server to use when resolving hostnames for the associated domain names.

Domain1(r): <Value>

The domain to associate with the specific DNS server.

Domain2(r): <Value>

An optional second domain to associate with the specific DNS server.

Index: <0..5>

The index of the server to add.

Example: **`xCommand DNSServerAdd Address: "192.168.12.0" Index: 1`**

DNSPerDomainServerDelete

Deletes a DNS server used for resolving hostnames for a specific domain.

Address: <Value>

The IP address of the DNS server to delete.

Example: **xCommand DNSPerDomainServerDelete Address: "192.168.12.0"**

DNSServerAdd

Adds a default DNS server. Default servers are used if there is no per-domain DNS server defined for the domain being looked up.

Address(r): <Value>

The IP address of a default DNS server to use when resolving domain names.

Index: <0..5>

The index of the server to add.

Example: **xCommand DNSServerAdd Address: "192.168.12.0" Index: 1**

DNSServerDelete

Deletes a DNS server

Address: <Value>

The IP address of the DNS server to delete.

Example: **xCommand DNSServerDelete Address: "192.168.12.0"**

DomainAdd

Adds a domain for which this VCS is authoritative.

Name(r): <S: 1, 128>

The domain name. It can comprise multiple levels. Each level's name can only contain letters, digits and hyphens, with each level separated by a period (dot). A level name cannot start or end with a hyphen, and the final level name must start with a letter.

Authzone: <S: 1, 128>

The name of the traversal zone to use when delegating credential checks for SIP messages for this domain. Leave this parameter unspecified if you want this VCS Expressway to perform the credential checking.

Edgesip: <On/Off>

Endpoint registration, call control and provisioning services are provided by Unified CM. Default: Off.

Edgexmpp: <On/Off>

Instant messaging and presence services for this SIP domain are provided by the Unified CM IM&P service. Default: Off.

Sip: <On/Off>

Controls whether the VCS is authoritative for this domain. The VCS acts as a SIP registrar and Presence Server for the domain, and will accept registration requests for any SIP endpoints attempting to register with an alias that includes this domain. Default: On.

Xmppfederation: <On/Off>

Controls whether the domain is available for XMPP federation. Default: Off.

Example: **xCommand DomainAdd Name: "100.example-name.com" Authzone: "Traversal zone" Edge: Off Sip: On**

DomainDelete

Deletes a domain.

DomainId(r): <1..200>

The index of the domain to be deleted.

Example: **xCommand DomainDelete DomainId: 2**

ExtAppStatusAdd

Allows another application running on the VCS to attach xstatus to the VCS XML xstatus tree.

Note: this command is intended for developer use only.

Name(r): <S:1, 64>

Descriptive name for the external application whose status is being referenced.

Filename(r): <S:0, 255>

XML file containing status that is to be attached for an external application.

Example: **`xCommand ExtAppStatusAdd Name: "foo" Filename: "foo.xml"`**

ExtAppStatusDelete

Deletes an external application status entry.

Note: this command is intended for developer use only.

Name(r): <S:1, 64>

Descriptive name for the external application whose status is being referenced.

Example: **`xCommand ExtAppStatusDelete Name: foo`**

Fail2ban

Configures automated intrusion protection categories.

Argument: <S:1, 64>

The value applied by the command.

Command: <unbanip/banip/reload/bantime/findtime/maxretry/addignoreip/delignoreip/status>

The action to take.

Jail: <S:1, 64>

The category to which the command is applied.

Example: **`xCommand Fail2ban Argument "192.0.12.0" Command: addignoreip Jail: sip-auth`**

FeedbackDeregister

Deactivates a particular feedback request.

ID: <1..3>

The index of the feedback request to be deactivated.

Example: **`xCommand FeedbackDeregister ID: 1`**

FeedbackRegister

Activates notifications on the event or status changes described by the expressions. Notifications are sent in XML format to the specified URL. Up to 15 expressions may be registered for each of 3 feedback IDs.

ID: <1..3>

The ID of this particular feedback request.

URL(r): <S: 1, 256>

The URL to which notifications are to be sent.

Expression.1..15: <S: 1, 256>

The events or status change to be notified. Valid Expressions are:

Status/Ethernet	Status/Calls	Event/CallDisconnected
Event/	Status/NTP	Status/Registrations
Event/CallFailure	Event/Bandwidth	Status/LDAP
Status/Zones	Event/RegistrationAdded	Event/Locate
Status/Feedback	Event/CallAttempt	Event/RegistrationRemoved
Event/ResourceUsage	Status/ExternalManager	Event/CallConnected
Event/RegistrationFailure	Event/AuthenticationFailure	

Example: **xCommand FeedbackRegister ID: 1 URL: "http://192.168.0.1/feedback/" Expression.1: "Status/Calls" Expression.2: "Event/CallAttempt"**

FindRegistration

Returns information about the registration associated with the specified alias. The alias must be registered on the VCS on which the command is issued.

Alias(r): <S: 1, 60>

The alias that you wish to find out about.

Example: **xCommand FindRegistration Alias: "john.smith@example.com"**

Fips

Sets FIPS140-2 cryptographic mode.

Command: <leave/enter/status>

Either enters, leaves or provides the current status of the system's FIPS140-2 cryptographic mode.

Example: **xCommand Fips Command: enter**

ForceConfigUpdate

Forces the relevant configuration on this peer to be updated to match that of the cluster master.

This command has no parameters.

Example: **xCommand ForceConfigUpdate**

LinkAdd

Adds and configures a new link.

LinkName(r): <S: 1, 50>

Assigns a name to this link.

Node1: <S: 1, 50>

Specifies the first zone or subzone to which this link will be applied.

Node2: <S: 1, 50>

Specifies the second zone or subzone to which this link will be applied.

Pipe1: <S: 1, 50>

Specifies the first pipe to be associated with this link.

Pipe2: <S: 1, 50>

Specifies the second pipe to be associated with this link.

Example: **`xCommand LinkAdd LinkName: "Subzone1 to UK" Node1: "Subzone1" Node2: "UK Sales Office" Pipe1: "512Kb ASDL"`**

LinkDelete

Deletes a link.

LinkId(r): <1..3000>

The index of the link to be deleted.

Example: **`xCommand LinkDelete LinkId: 2`**

ListPresentities

Returns a list of all the presentities being watched by a particular subscriber.

Subscriber(r): <S:1, 255>

The URI of the subscriber who is watching.

Example: **`xCommand ListPresentities Subscriber: "john.smith@example.com"`**

ListSubscribers

Returns a list of all subscribers who are watching for the presence information of a particular presentity.

Presentity(r): <S:1, 255>

The URI of the presentity being watched.

Example: **`xCommand ListSubscribers Presentity: "mary.jones@example.com"`**

Locate

Runs the VCS's location algorithm to locate the endpoint identified by the given alias, searching locally, on neighbors, and on systems discovered through the DNS system, within the specified number of 'hops'. Results are reported back through the xFeedback mechanism, which must therefore be activated before issuing this command (e.g. xFeedback register event/locate).

Alias(r): <S: 1, 60>

The alias associated with the endpoint you wish to locate.

HopCount(r): <0..255>

The hop count to be used in the search.

Protocol(r): <H323/SIP>

The protocol used to initiate the search.

SourceZone: <S: 1, 50>

The zone from which to simulate the search request. Choose from the Default Zone (an unknown remote system), the Local Zone (a locally registered endpoint) or any other configured neighbor, traversal client or traversal server zone.

Authenticated: <Yes/No>

Whether the search request should be treated as authenticated or not.

SourceAlias: <S: 0, 60>

The source alias to be used for the search request. Default: xcom-locate

Example: **`xCommand Locate Alias: "john.smith@example.com" HopCount: 15 Protocol: SIP SourceZone: LocalZone Authenticated: Yes SourceAlias: alice@example.com`**

LoginUserAdd

Adds an entry to the local authentication database.

Name(r): <String>

Defines the name for this entry in the local authentication database.

Password(r): <Password>

Defines the password for this entry in the local authentication database.

Example: **`xCommand LoginUserAdd Name: "alice" Password: "abcXYZ_123"`**

LoginUserDelete

Deletes an entry from the local authentication database.

Name(r): <String>

The name of the entry to delete.

Example: **`xCommand LoginUserDelete Name: "alice"`**

Networkinterface

Controls whether the LAN 2 port is enabled for management and call signaling.

DualInterfaces(r): <enable/disable/status>

Sets or reports on the current status of the the LAN 2 port.

Example: **`xCommand Networkinterface DualInterfaces: enable`**

NTPServerAdd

Adds an NTP server to be used when synchronizing system time.

Address(r): <Value>

The IP address or Fully Qualified Domain Name (FQDN) of the NTP server to add.

Example: **`xCommand NTPServerAdd Address: "ntp.server.example.com"`**

NTPServerDelete

Address(r): <Value>

The IP address or Fully Qualified Domain Name (FQDN) of the NTP server to delete.

Example: **xCommand NTPServerDelete Address: "ntp.server.example.com"**

OptionKeyAdd

Adds a new option key to the VCS. These are added to the VCS in order to add extra functionality, such as increasing the VCS's capacity. Contact your Cisco representative for further information.

Key(r): <S: 0, 90>

Specifies the option key of your software option.

Example: **xCommand OptionKeyAdd Key: "1X4757T5-1-60BAD5CD"**

OptionKeyDelete

Deletes a software option key from the VCS.

OptionKeyId(r): <1..64>

Specifies the ID of the software option to be deleted.

Example: **xCommand OptionKeyDelete OptionKeyId: 2**

Ping

Checks that a particular host system is contactable.

Hostname: <Value>

The IP address or hostname of the host system you want to try to contact.

Example: **xCommand Ping Hostname: "example.com"**

PipeAdd

Adds and configures a new pipe.

PipeName(r): <S: 1, 50>

Assigns a name to this pipe.

TotalMode: <Unlimited/Limited/NoBandwidth>

Controls total bandwidth restrictions for the pipe. *NoBandwidth*: no calls can be made using this pipe. Default: Unlimited.

Total: <1..100000000>

If this pipe has limited bandwidth, sets the maximum bandwidth (in kbps) available at any one time on the pipe. Default: 500000.

PerCallMode: <Unlimited/Limited/NoBandwidth>

Controls bandwidth restrictions of individual calls. *NoBandwidth*: no calls can be made using this pipe. Default: Unlimited.

PerCall: <1..100000000> For limited per-call mode, sets the maximum bandwidth (in kbps) available per call. Default: 1920.

Example: **xCommand PipeAdd PipeName: "512k ADSL" TotalMode: Limited Total: 512 PerCallMode: Limited PerCall: 128**

PipeDelete

Deletes a pipe.

PipeId(r): <1..1000>

The index of the pipe to be deleted.

Example: **xCommand PipeDelete PipeId: 2**

PolicyServiceAdd

Adds a policy service.

Name(r): <S: 0, 50>

Assigns a name to this Policy Service.

Description: <S: 0, 64>

A free-form description of the Policy Service.

Protocol: <HTTP/HTTPS>

Specifies the protocol used to connect to the remote service. Default: HTTPS

Verify: <On/Off>

Controls X.509 certificate checking and mutual authentication between this VCS and the policy service. When enabled, the server's FQDN or IP address, as specified in the address field, must be contained within the server's X.509 certificate (in either the Subject Common Name or the Subject Alternative Name attributes). Default: On

CRLCheck: <On/Off>

Controls certificate revocation list checking of the certificate supplied by the policy service. When enabled, the server's X.509 certificate will be checked against the revocation list of the certificate authority of the certificate. Default: Off

Address: <S: 0, 128>

Specifies the IP address or Fully Qualified Domain Name (FQDN) of the remote service.

Path: <S: 0, 255>

Specifies the URL of the remote service.

StatusPath: <S: 0..255>

Specifies the path for obtaining the remote service status. Default: status

UserName: <S: 0, 30>

Specifies the user name used by the VCS to log in and query the remote service.

Password: <S: 0, 82>

The password used by the VCS to log in and query the remote service. The maximum plaintext length is 30 characters.

DefaultCPL: <S: 0, 255>

The CPL used when the remote service is unavailable. Default: <reject status='403' reason='Service Unavailable'/>

Example: **`xCommand PolicyServiceAdd Name: "Conference" Description: "Conference service" Protocol: HTTPS Verify: On CRLCheck: On Address: "service.example.com" Path: "service" StatusPath: "status" UserName: "user123" Password: "password123" DefaultCPL: "<reject status='403' reason='Service Unavailable'/>"`**

PolicyServiceDelete

Deletes a policy service.

PolicyServiceId(r): <1..20>

The index of the policy service to be deleted.

Example: **`xCommand PolicyServiceDelete PolicyServiceId: 1`**

RemoteSyslogAdd

Adds the address of a remote syslog server.

Address(r): <Value>

The IP address or FQDN of the remote syslog server.

Crlcheck: <On/Off>

Controls whether the certificate supplied by the syslog server is checked against the certificate revocation list (CRL). Default : Off

Format: <bsd/ietf>

The format in which remote syslog messages are written. Default : bsd

Mode: <bsd/ietf/ietf_secure/user_defined>

The syslog protocol to use when sending messages to the syslog server. Default: bsd.

Port: <1..65535>

The UDP/TCP destination port to use. Suggested ports: UDP=514 TCP/TLS=6514 Default : 514

Transport: <udp/tcp/tls>

The transport protocol to use when communicating with the syslog server. Default: udp

Example: **`xCommand RemoteSyslogAdd Address: "remote_server.example.com" Crlcheck: Off Format: bsd Mode: bsd Port: 514 Transport: udp`**

RemoteSyslogDelete

Address(r): <Value>

The IP address or Fully Qualified Domain Name (FQDN) of the remote syslog server to delete.

Port(r): <1..65535>

The port used by the remote syslog server to be deleted.

Transport(r): <udp/tcp/tls>

The transport protocol used by the remote syslog server to be deleted.

Example: **`xCommand RemoteSyslogDelete Address: "remote_server.example.com" Port: 514 Transport: udp`**

RemoveRegistration

Removes a registration from the VCS.

Registration: <1..3750>

The index of the registration to be removed.

RegistrationSerialNumber: <S: 1, 255>

The serial number of the registration to be removed.

Example: **`xCommand RemoveRegistration RegistrationSerialNumber: "a761c4bc-25c9-11b2-a37f-0010f30f521c"`**

Restart

Restarts the VCS without a full system reboot.

This command has no parameters.

Example: **`xCommand Restart`**

RouteAdd

Adds and configures a new IP route (also known as a static route).

Address(r): <S: 1, 39>

Specifies an IP address used in conjunction with the prefix length to determine the network to which this route applies. Default: 32

PrefixLength(r): <1..128>

Specifies the number of bits of the IP address which must match when determining the network to which this route applies.

Gateway(r): <S: 1, 39>

Specifies the IP address of the gateway for this route.

Interface: <Auto/LAN1/LAN2>

The LAN interface to use for this route. *Auto*: the VCS will select the most appropriate interface to use. Default: Auto

Example: **`xCommand RouteAdd Address: "10.13.8.0" PrefixLength: 32 Gateway: "192.44.0.1"`**

RouteDelete

Deletes a route.

RouteId(r): <1..50>

The index of the route to be deleted.

Example: **`xCommand RouteDelete RouteId: 1`**

Securemode

Controls Advanced Account Security options.

Command(r): <on/off/status>

The index of the route to be deleted.

Example: **`xCommand Securemode Command: off`**

SearchRuleAdd

Adds a new search rule to route searches and calls toward a zone or policy service.

Name(r): <S: 0, 50>

Descriptive name for the search rule.

ZoneName: <S: 0, 50>

The zone or policy service to query if the alias matches the search rule.

Description: <S: 0, 64>

A free-form description of the search rule.

Example: **`xCommand SearchRuleAdd Name: "DNS lookup" ZoneName: "Sales Office" Description: "Send query to the DNS zone"`**

SearchRuleDelete

Deletes a search rule.

SearchRuleId(r): <1..2000>

The index of the search rule to be deleted.

Example: **`xCommand SearchRuleDelete SearchRuleId: 1`**

SIPRouteAdd

Adds a route that will cause SIP messages matching the given criteria to be forwarded to the specified IP address and port.

Note: this command is intended for developer use only.

Method(r): <S:0, 64>

SIP method to match to select this route (e.g. INVITE, SUBSCRIBE).

RequestLinePattern(r): <S:0, 128>

Regular expression to match against the SIP request line.

HeaderName(r): <S:0, 64>

Name of SIP header field to match (e.g. Event).

HeaderPattern(r): <S:0, 128>

Regular expression to match against the specified SIP header field.

Authenticated(r): <On/Off>

Whether to forward authenticated requests. *On*: only forward requests along route if incoming message has been authenticated. *Off*: always forward messages that match this route. Default: Off

Address(r): <S:0, 39>

Specifies the IP address of the next hop for this route, where matching SIP requests will be forwarded.

Port(r): <1..65534>

Specifies the port on the next hop for this route to which matching SIP requests will be routed. Default: 5060

Transport(r): <UDP/TCP/TLS>

Determines which transport type will be used for SIP messages forwarded along this route.

Tag(r): <S:0, 64>

Tag value specified by external applications to identify routes that they create.

Example: `xCommand SIPRouteAdd Method: "SUBSCRIBE" RequestLinePattern: ".*@(%localdomains%|%ip%)" HeaderName: "Event" HeaderPattern: "(my-event-package)(.*)" Authenticated: On Address: "127.0.0.1" Port: 22400 Transport: TCP Tag: "Tag1"`

SIPRouteDelete

Deletes an existing SIP route, identified either by the specified index or tag.

Note: this command is intended for developer use only.

SipRouteId: <1..20>

The index of the SIP route to be deleted.

Tag: <S:0, 64>

Tag value specified by external applications to uniquely identify routes that they create.

Example: `xCommand SIPRouteDelete SipRouteId: Tag: "Tag1"`

SubZoneAdd

Adds and configures a new subzone.

SubZoneName(r): <S: 1, 50>

Assigns a name to this subzone.

TotalMode: <Unlimited/Limited/NoBandwidth>

Determines whether this subzone has a limit on the total bandwidth of calls being used by its endpoints at any one time. *NoBandwidth*: no bandwidth available. No calls can be made to, from, or within this subzone. Default: Unlimited.

Total: <1..100000000>

Sets the total bandwidth limit (in kbps) of this subzone (applies only if the mode is set to *Limited*). Default: 500000.

PerCallInterMode: <Unlimited/Limited/NoBandwidth>

Sets bandwidth limits for any one call to or from an endpoint in this subzone. *NoBandwidth*: no bandwidth available. No calls can be made to or from this subzone. Default: Unlimited.

PerCallInter: <1..100000000>

Specifies the bandwidth limit (in kbps) on any one call to or from an endpoint in this subzone (applies only if the mode is set to *Limited*). Default: 1920.

PerCallIntraMode: <Unlimited/Limited/NoBandwidth>

Sets bandwidth limits for any one call between two endpoints within this subzone. *NoBandwidth*: no bandwidth available. No calls can be made within this subzone. Default: Unlimited.

PerCallIntra: <1..100000000>

Specifies the bandwidth limit (in kbps) for any one call between two endpoints within this subzone (applies only if the mode is set to Limited). Default: 1920.

Example: **`xCommand SubZoneAdd SubZoneName: "BranchOffice" TotalMode: Limited Total: 1024 PerCallInterMode: Limited PerCallInter: 512 PerCallIntraMode: Limited PerCallIntra: 512`**

SubZoneDelete

Deletes a subzone.

SubZoneId(r): <1..1000>

The index of the subzone to be deleted.

Example: **`xCommand SubZoneDelete SubZoneId: 2`**

SubZoneMembershipRuleAdd

Adds and configures a new membership rule.

Name(r): <S: 1, 50>

Assigns a name to this membership rule.

Type(r): <Subnet/AliasPatternMatch>

The type of address that applies to this rule. *Subnet*: assigns the device if its IP address falls within the configured IP address subnet. *Alias Pattern Match*: assigns the device if its alias matches the configured pattern.

SubZoneName(r): <S: 1, 50>

The subzone to which an endpoint is assigned if its address satisfies this rule.

Description: <S: 0, 64>

A free-form description of the membership rule.

Example: **`xCommand SubZoneMembershipRuleAdd Name: "Home Workers" Type: Subnet SubZoneName: "Home Workers" Description: "Staff working at home"`**

SubZoneMembershipRuleDelete

Deletes a membership rule.

SubZoneMembershipRuleId(r): <1..3000>

The index of the membership rule to be deleted.

Example: **`xCommand SubZoneMembershipRuleDelete SubZoneMembershipRuleId: 1`**

Tracepath

Discover the path taken by a network packet sent to a particular destination host system.

Hostname: <Value>

The IP address or hostname of the host system to which you want to trace the path.

Example: **`xCommand Tracepath Hostname: "example.com"`**

Traceroute

Discover the route taken by a network packet sent to a particular destination host system. It reports the details of each router along the path, and the time taken for each router to respond to the request.

Hostname: <Value>

The IP address or hostname of the host system to which you want to trace the route.

Example: **`xCommand Traceroute Hostname: "example.com"`**

TransformAdd

Adds and configures a new transform.

Pattern(r): <S: 1, 60>

Specifies the pattern against which the alias is compared.

Type: <Exact/Prefix/Suffix/Regex>

How the pattern string must match the alias for the transform to be applied. *Exact*: the entire string must exactly match the alias character for character. *Prefix*: the string must appear at the beginning of the alias. *Suffix*: the string must appear at the end of the alias. *Regex*: the string is treated as a regular expression. Default: Prefix

Behavior: <Strip/Replace/AddPrefix/AddSuffix>

How the alias is modified. *Strip*: removes the matching prefix or suffix from the alias. *Replace*: substitutes the matching part of the alias with the text in the replace string. *AddPrefix*: prepends the replace string to the alias. *AddSuffix*: appends the replace string to the alias. Default: Strip

Replace: <S: 0, 60>

The text string to use in conjunction with the selected Pattern behavior.

Priority: <1..65534>

Assigns a priority to the specified transform. Transforms are compared with incoming aliases in order of priority, and the priority must be unique for each transform. Default: 1

Description: <S: 0, 64>

A free-form description of the transform.

State: <Enabled/Disabled>

Indicates if the transform is enabled or disabled. Disabled transforms are ignored. Default: Enabled

Example: **`xCommand TransformAdd Pattern: "example.net" Type: suffix Behavior: replace Replace: "example.com" Priority: 3 Description: "Change example.net to example.com" State: Enabled`**

TransformDelete

Deletes a transform.

TransformId(r): <1..100>

The index of the transform to be deleted.

Example: **`xCommand TransformDelete TransformId: 2`**

WarningAcknowledge

Acknowledges an existing warning.

Note: this command is intended for developer use only.

WarningID(r): <S:36, 36>

The warning ID

Example: **xCommand WarningAcknowledge WarningID: "ab3d63f6-c0bb-4a9c-a121-e683abfedff0"**

WarningLower

Lowers a warning.

Note: this command is intended for developer use only.

WarningID(r): <S:36, 36>

The warning ID.

Example: **xCommand WarningLower WarningID: "ab3d63f6-c0bb-4a9c-a121-e683abfedff0"**

WarningRaise

Raises a warning.

Note: this command is intended for developer use only.

WarningID(r): <S:36, 36>

The warning ID.

WarningText(r): <S:0, 255>

The description of the warning.

Example: **xCommand WarningRaise WarningID: "ab3d63f6-c0bb-4a9c-a121-e683abfedff0" WarningText: "Module foo is malfunctioning"**

Xmppdelete

Deletes the details of IM and Presence servers.

Address(r): <Value>

The IP address or Fully Qualified Domain Name (FQDN) of the IM and Presence server to delete.

Example: **xCommand Xmppdelete Address: "imp_server.example.com"**

Xmppdiscovery

Discovers the details of IM and Presence servers.

Address(r): <Value>

The IP address or Fully Qualified Domain Name (FQDN) of the IM and Presence server to discover.

Axlpassword(r): <Password>

The password used to access the IM and Presence publisher.

Axlusername(r): <String>

The username used to access the IM and Presence publisher.

CertValidationDisabled: <On/Off>

Controls X.509 certificate checking against the certificate presented by the IM and Presence publisher. Default: On

Example: **xCommand Xmppdiscovery Address: "imp.example.com" Axlpassword: "xyz" Axlusername: "abc"**

ZoneAdd

Adds and configures a new zone.

ZoneName(r): <S: 1, 50>

Assigns a name to this zone.

Type(r): <Neighbor/TraversalClient/TraversalServer/ENUM/DNS>

Determines the nature of the specified zone, in relation to the local VCS. Neighbor: the new zone will be a neighbor of the local VCS. *TraversalClient*: there is a firewall between the zones, and the local VCS is a traversal client of the new zone. *TraversalServer*: there is a firewall between the zones and the local VCS is a traversal server for the new zone. *ENUM*: the new zone contains endpoints discoverable by ENUM lookup. *DNS*: the new zone contains endpoints discoverable by DNS lookup.

Example: **`xCommand ZoneAdd ZoneName: "UK Sales Office" Type: Neighbor`**

ZoneDelete

Deletes a zone.

ZoneId(r): <1..1000>

The index of the zone to be deleted.

Example: **`xCommand ZoneDelete ZoneId: 2`**

ZoneList

A diagnostic tool that returns the list of zones (grouped by priority) that would be queried, and any transforms that would be applied, in a search for a given alias.

Note that this command does not change any existing system configuration.

Alias(r): <S: 1, 60>

The alias to be searched for.

Example: **`xCommand ZoneList Alias: "john.smith@example.com"`**

Command reference — xStatus

The **xStatus** group of commands are used to return information about the current status of the system. Each **xStatus** element returns information about one or more sub-elements.

The following section lists all the currently available **xStatus** commands, and the information that is returned by each command.

To obtain information about the existing status, type:

- **xStatus** to return the current status of all status elements
- **xStatus <element>** to return the current status for that particular element and all its sub-elements
- **xStatus <element> <sub-element>** to return the current status of that group of sub-elements

To obtain information about the **xStatus** commands, type:

- **xStatus ?** to return a list of all elements available under the **xStatus** command

xStatus elements

The current xStatus elements are:

- Alarm
- Alternates
- Applications
- B2BUACalls
- B2buapresencerelayservice
- B2buapresencerelayuser
- Calls
- Cluster
- ExternalManager
- Fail2banjailbannedaddress
- Feedback
- FindMeManager
- Fips
- Firewall
- H323
- Hardware
- Iptablesacceptedrule
- Iptablesrule
- License
- Links
- NetworkInterface
- Ntpcertificates
- Options
- Phonebookserver
- Pipes

- Policy
- Portusage
- ProvisioningServer
- Provisioningdevice
- Provisioningdevicestatussynch
- Provisioningservice
- Registrations
- ResourceUsage
- SIP
- SipServiceDomains
- SipServiceZones
- SystemUnit
- TURN
- Time
- Warnings
- Zones

External policy overview

The Cisco TelePresence Video Communication Server (VCS) has built in support for Registration Policy, Call Policy and User Policy (FindMe) configuration. It also supports CPL (Call Processing Language) for implementing more complex policy decisions. CPL is designed as a machine-generated language and is not immediately intuitive; while the VCS can be loaded with CPL to implement advanced call policy decisions, complex CPL is difficult to write and maintain.

The VCS's external policy feature allows policy decisions to be taken by an external system which can then instruct the VCS on the course of action to take (such as whether to accept a registration, fork a call and so on). Call policy can now be managed independently of the VCS, and can implement features that are unavailable on the VCS. The external policy server can make routing decisions based on data available from any source that the policy server has access to, allowing companies to make routing decisions based on their specific requirements.

When the VCS is configured to use an external policy server the VCS sends the external policy server a service request (over HTTP or HTTPS), the service will send a response back containing a CPL snippet which the VCS will then execute.

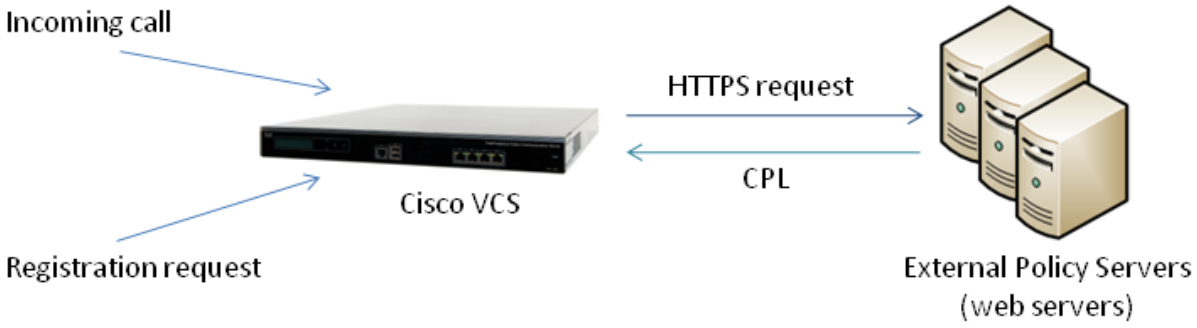

Using an external policy server

The main areas where the VCS can be configured to use an external policy server are:

- Registration Policy – to allow or reject registrations.
- Call Policy (also known as Admin Policy) – to control the allowing, rejecting, routing (with fallback if calls fail) and forking of calls.
- Search rules (policy can be applied for specific dial plan search rules).

Each of these areas can be configured independently of each other as to whether or not to use a policy service. If a policy service is used, the decisions made by the policy service replace (rather than supplement) those made by the VCS.

When configuring policy services:

- Up to 3 external policy servers may be specified to provide resiliency (and not load balancing).
- Default CPL can be configured, to be processed by the VCS as a fallback, if the service is not available.
- The status and reachability of the service can be queried via a status path.

If you require FindMe functionality beyond that provided by VCS / Cisco TMS, we recommend that you implement it through Call Policy.

More information about policy services, including example CPL, can be found in the *External Policy on VCS Deployment Guide*.

External policy request parameters

When the VCS uses a policy service it sends information about the call or registration request to the service in a POST message using a set of name-value pair parameters. The service can then make decisions based upon these parameters combined with its own policy decision logic and supporting data (for example lists of aliases that are allowed to register or make and receive calls, via external data lookups such as an LDAP database or other information sources).

The service response must be a 200 OK message with CPL contained in the body.

The following table lists the possible parameters contained within a request and indicates with a ✓ in which request types that parameter is included. It also indicates, where relevant, the range of accepted values.

Parameter name	Values	Registration Policy	Search rules	Call Policy	User Policy
ALIAS		✓			
ALLOW_INTERWORKING	TRUE / FALSE		✓	✓	✓
AUTHENTICATED	TRUE / FALSE	✓	✓	✓	✓
AUTHENTICATED_SOURCE_ALIAS			✓	✓	✓
AUTHENTICATION_USER_NAME			✓	✓	✓
CLUSTER_NAME		✓	✓	✓	✓
DESTINATION_ALIAS			✓	✓	✓
DESTINATION_ALIAS_PARAMS			✓	✓	✓
GLOBAL_CALL-SERIAL_NUMBER	GUID		✓	✓	✓
LOCAL_CALL_SERIAL_NUMBER	GUID		✓	✓	✓
METHOD	INVITE / ARQ / LRQ / OPTIONS / SETUP / REGISTER / SUBSCRIBE / PUBLISH	✓	✓	✓	✓
NETWORK_TYPE	IPV4 / IPV6		✓	✓	✓
POLICY_TYPE	REGISTRATION / SEARCH / ADMIN / USER	✓	✓	✓	✓
PROTOCOL	SIP / H323	✓	✓	✓	✓
REGISTERED_ALIAS			✓	✓	✓
SOURCE_ADDRESS		✓	✓	✓	✓
SOURCE_IP		✓	✓	✓	✓
SOURCE_PORT		✓	✓	✓	✓

Parameter name	Values	Registration Policy	Search rules	Call Policy	User Policy
TRAVERSAL_TYPE	TYPE_[UNDEF / ASSENTSERVER / ASSENTCLIENT / H460SERVER / H460CLIENT / TURNSERVER / TURNCLIENT / ICE]		✓	✓	✓
UNAUTHENTICATED_SOURCE_ALIAS			✓	✓	✓
UTCTIME		✓	✓	✓	✓
ZONE_NAME			✓	✓	✓

Cryptography support

External policy servers should support TLS and AES-256/AES-128/3DES-168.

SHA-1 is required for MAC and Diffie-Hellman / Elliptic Curve Diffie-Hellman key exchange; the VCS does not support MD5.

Default CPL for policy services

When configuring a policy service, you can specify the **Default CPL** that is used by the VCS if the service is not available.

The **Default CPL** for registrations and Call Policy defaults to:

```
<reject status='403' reason='Service Unavailable'/>
```

and this will reject the request.

The **Default CPL** for policy services used by search rules defaults to:

```
<reject status='504' reason='Policy Service Unavailable'/>
```

and this will stop the search via that particular search rule.

This default CPL mean that in the event of a loss of connectivity to the policy server, all call and registration requests will be rejected. If this is not your required behavior then you are recommended to specify alternative default CPL.

We recommend that you use unique reason values for each type of service, so that if calls or registrations are rejected it is clear why and which service is rejecting the request.

Flash status word reference table

The flash status word is used in diagnosing NTP server synchronization issues.

It is displayed by the **`ntpq`** program **`rv`** command. It comprises a number of bits, coded in hexadecimal as follows:

Code	Tag	Message	Description
0001	TEST1	pkt_dup	duplicate packet
0002	TEST2	pkt_bogus	bogus packet
0004	TEST3	pkt_unsync	server not synchronized
0008	TEST4	pkt_denied	access denied
0010	TEST5	pkt_auth	authentication failure
0020	TEST6	pkt_stratum	invalid leap or stratum
0040	TEST7	pkt_header	header distance exceeded
0080	TEST8	pkt_autokey	Autokey sequence error
0100	TEST9	pkt_crypto	Autokey protocol error
0200	TEST10	peer_stratum	invalid header or stratum
0400	TEST11	peer_dist	distance threshold exceeded
0800	TEST12	peer_loop	synchronization loop
1000	TEST13	peer_unreach	unreachable or nonselect

Supported RFCs

VCS supports the following RFCs:

Table 10: Supported RFCs

RFC	Description
791	Internet Protocol
1213	Management Information Base for Network Management of TCP/IP-based internets
1305	Network Time Protocol (Version 3) Specification, Implementation and Analysis
2327	SDP: Session Description Protocol
2460	Internet Protocol, Version 6 (IPv6) Specification (partial, static global addresses only)
2464	Transmission of IPv6 Packets over Ethernet Networks
2782	A DNS RR for specifying the location of services (DNS SRV)
2833	RTP Payload for DTMF Digits, Telephony Tones and Telephony Signals
2915	The Naming Authority Pointer (NAPTR) DNS Resource Record
2976	SIP INFO method
3164	The BSD syslog Protocol
3261	Session Initiation Protocol
3263	Locating SIP Servers
3264	An Offer/Answer Model with the Session Description Protocol (SDP)
3325	Private Extensions to the Session Initiation Protocol (SIP) for Asserted Identity within Trusted Networks
3326	The Reason Header Field for the Session initiation Protocol (SIP)
3265	Session Initiation Protocol (SIP) – Specific Event Notification
3327	Session Initiation Protocol (SIP) Extension Header Field for Registering Non-Adjacent Contacts
3489	STUN - Simple Traversal of User Datagram Protocol (UDP) Through Network Address Translators (NATs)
3515	The Session Initiation Protocol (SIP) Refer Method
3550	RTP: A Transport Protocol for Real-Time Applications
3581	An Extension to the Session Initiation Protocol (SIP) for Symmetric Response Routing
3596	DNS Extensions to Support IP Version 6
3761	The E.164 to Uniform Resource Identifiers (URI) Dynamic Delegation Discovery System (DDDS) Application (ENUM)
3856	A Presence Event Package for the Session Initiation Protocol (SIP)
3863	Presence Information Data Format (PIDF)
3880	Call Processing Language (CPL): A Language for User Control of Internet Telephony Services
3891	Replaces header
3892	Referred-by header
3903	Session Initiation Protocol (SIP) Extension for Event State Publication

Table 10: Supported RFCs (continued)

RFC	Description
3944	H.350 Directory Services
3986	Uniform Resource Identifier (URI): Generic Syntax
4028	Session Timers in the Session Initiation Protocol
4213	Basic Transition Mechanisms for IPv6 Hosts and Routers
4291	IP Version 6 Addressing Architecture
4443	Internet Control Message Protocol (ICMPv6) for the Internet Protocol Version 6 (IPv6) Specification
4479	A Data Model for Presence
4480	RPID: Rich Presence Extensions to the Presence Information Data Format (PIDF)
4787	Network Address Translation (NAT) Behavioral Requirements for Unicast UDP
4861	Neighbor Discovery for IP version 6 (IPv6)
5095	Deprecation of Type 0 Routing Headers in IPv6
5104	Codec Control Messages in the RTP Audio-Visual Profile with Feedback (AVPF): Temporary Maximum Media Stream Bit Rate Request (TMMBR)
5245	Interactive Connectivity Establishment (ICE)
5389	Session Traversal Utilities for NAT (STUN)
5424	The Syslog Protocol
5626	Managing Client-Initiated Connections in the Session Initiation Protocol (SIP)
5627	Obtaining and Using Globally Routable User Agent URIs (GRUUs) in the Session Initiation Protocol (SIP). Note that this RFC is only partially supported: Public GRUU is supported; Temporary GRUU is not supported.
5766	Traversal Using Relays around NAT (TURN): Relay Extensions to Session Traversal Utilities for NAT (STUN)
5806	Diversion Indication in SIP
6156	Traversal Using Relays around NAT (TURN) Extension for IPv6

Software version history

This section summarizes feature updates that have occurred in the following earlier software releases:

- X8.2
- X8.1.1
- X8.1
- X7.2.1
- X7.2
- X7.1
- X7

For information about earlier software releases, see the online help or previous versions of this document.

X8.2

Unified Communications: Jabber Guest

Cisco Jabber Guest is a consumer to business (C2B) solution that extends the reach of Cisco's enterprise telephony to people outside of a corporate firewall who do not have phones registered with Cisco Unified Communications Manager.

External XMPP federation

External XMPP federation enables users registered to Unified CM IM & Presence to communicate via the VCS Expressway with users from a different XMPP deployment.

TURN media over TCP

The VCS Expressway TURN server supports TURN media over TCP.

This allows clients to use TURN services in environments where UDP connections are not supported or blocked. Configuration of the supported protocols is available only through the CLI command **`xConfiguration Traversal Server TURN ProtocolMode`**.

New 'Unified Communications traversal' zone type

To simplify the configuration of secure traversal client and traversal server zones that are to be used for Unified Communications, you must now use the new zone type of *Unified Communications traversal* when configuring zones via the web interface.

This automatically configures an appropriate traversal zone (a traversal client zone when selected on a VCS Control, or a traversal server zone when selected on a VCS Expressway) that uses SIP TLS with **TLS verify mode** set to *On*, and **Media encryption mode** set to *Force encrypted*.

This replaces the previous **Unified Communications services** setting that was available when configuring traversal client and traversal server zones. Existing zones configured in previous software versions for **Unified Communications services** are automatically converted to use the new *Unified Communications traversal* zone type.

Note that this zone type applies to the web interface only, the underlying CLI configuration settings have not changed.

Support for `X-cisco-srtp-fallback`

Support has been added for the **`X-cisco-srtp-fallback`** package, allowing the VCS's B2BUA to use Cisco Unified Communications Manager-style best effort media encryption for the automatically generated TLS neighbor zones.

RTP and RTCP media demultiplexing ports

In Small/Medium systems, 1 pair of RTP and RTCP media demultiplexing ports are used. These can now either be explicitly specified (**Configuration > Traversal > Ports**) or they can be allocated from the start of the general range of traversal media ports. In previous X8 releases they were always allocated from the start of the traversal media ports range.

In Large systems, 6 pairs of RTP and RTCP media demultiplexing ports are used. These are still always allocated from the start of the traversal media ports range.

After upgrading to X8.2, all existing traversal media port configurations / firewall requirements are maintained.

Diagnostic logging

The diagnostic logging feature has been extended to include:

- an xconfig file
- an xstatus file
- enabling the tcpdump (if requested) cluster-wide
- consolidating all of the files into a single downloadable diagnostic log archive (per peer)
- an indication on the web administration page of which user / IP address initiated the logging

The xconfig and xstatus files are taken at the start of the logging process.

SIP REFER support

The VCS B2BUA has SIP REFER message support. A **SIP REFER mode** advanced zone configuration parameter has been introduced.

By default it will forward REFER messages, but it can be configured to terminate REFER messages and use the B2BUA to perform the transfer (typically to a bridge) on behalf of the far endpoint.

Other enhancements and usability improvements

- The **HTTP server allow list** page (used for mobile and remote access clients to access additional web services inside the enterprise) now displays any automatically configured entries.
- You can configure the timeout period for TLS socket handshake (**Configuration > Protocols > SIP**).
- The TURN relay status page (**Status > TURN relay usage**) now provides a summary list of all the clients that are connected to the TURN server. From there you can select a specific client to see all of the relays and ports that it is using.
- Ability to copy search rules. You can use the **Clone** action on the search rules listing page (**Configuration > Dial plan > Search rules**) to copy and then edit an existing search rule.
- The DNS lookup tool allows you to select which DNS servers (from the configured set of default DNS servers) to use for the lookup.
- The automated protection service now supports IPv6 addresses.

Changed functionality

Access to the systemunit.xml file is now protected. Only authenticated VCS administrator accounts can access the file. This may affect the discovery of VCS by Cisco TMS.

Call status and call history now indicates components routed through the B2BUA for encryption or ICE support with a component type of 'B2BUA' (formerly 'Encryption B2BUA').

Note: The combination of having static NAT mode on and having the B2BUA engaged to do media encryption/decryption can cause the firewall outside the VCS Expressway to mistrust packets originating from the VCS Expressway. You can work around this by configuring the firewall to allow NAT reflection. If your firewall cannot allow this, you must configure the traversal path such that the B2BUA on the VCS Expressway is not engaged.

X8.1.1

Unified Communications: mobile and remote access

Cisco Unified Communications mobile and remote access is a core part of the Cisco Collaboration Edge Architecture. It allows endpoints such as Cisco Jabber to have their registration, call control, provisioning, messaging and presence services provided by Cisco Unified Communications Manager (Unified CM) when the endpoint is not within the enterprise network. The VCS provides secure firewall traversal and line-side support for Unified CM registrations.

For more information including configuration recommendations and troubleshooting details, see *Unified Communications: Mobile and Remote Access via VCS Deployment Guide*.

Support to modify Maximum transmission unit (MTU) size

You can configure the maximum transmission unit (MTU) for each network interface on the **System > IP** page.

Diagnostic logging

The tcpdump facility has been removed from the **Diagnostic logging** tool.

Jabber Guest

Jabber Guest support has been removed (it was previously provided as a feature preview in X8.1). It will be reintroduced in a future release of VCS software.

X8.1

Microsoft Lync 2013 / H.264 SVC support

The Microsoft Lync B2BUA now supports calls to and from Microsoft Lync 2013 clients. It provides interworking between standard H.264 AVC and Lync 2013's H.264UC SVC codec. To use Lync 2013 you must install the **Microsoft Interoperability** option key (formerly known as the **Enhanced OCS Collaboration** option key). Note that for Lync 2010, the **Microsoft Interoperability** option key requirements remain as per previous releases (i.e. it is required for encrypted calls to and from Microsoft Lync Server and for establishing ICE calls to Lync clients).

Presentation sharing via Lync 2013 is supported but only from VCS to Lync.

Support for standards-based H.264 SVC codecs

The B2BUA now supports calls to standards-based H.264 SVC codecs.

Improved performance and scalability

- VCS X8.1 software can take advantage of the improved performance and scalability capabilities that are available when running on Large VM server deployments. It can support up to 500 traversal calls, 750 non-traversal calls and 5000 registrations. Note that standard VCS appliances or equivalent VM hardware still provides support for up to 150 traversal calls, 750 non-traversal calls and 2500 registrations.
- The number of concurrent searches has increased from 100 to 500.

New traversal media port framework

- For new installations of X8.1 or later, the default range for **traversal media ports** is 36000 – 59999. The previous default range of 50000 - 54999 still applies to earlier releases that have upgraded to X8.1. The larger range is required to support the improved scalability features.
- The media demultiplexing ports on the VCS Expressway now use the first set of ports from the general range of **traversal media ports** instead of 2776 and 2777.
  - On existing systems that have been upgraded to X8.1, this will be 50000 and 50001 by default.
  - On new installations of X8.1, this will be 36000 and 36001 by default.
  - On large VM deployments, the first 12 ports in the traversal media port range are used (50000 - 50011 or 36000 - 36011 as appropriate).

  This applies to all RTP/RTCP media, regardless of whether it is H.323 or SIP. Thus, the previously used **Media demultiplexing RTP port** and **RTCP port** settings (**Configuration > Traversal > Ports**) and associated `xConfiguration Traversal Server` CLI commands have been removed. Administrators will need to adjust their firewall settings accordingly.

New TURN server port framework

On Large systems you can configure a range of TURN request listening ports. The default range is 3478 – 3483.

For new installations of X8.1 or later, the default range for **TURN relay media ports** is 24000 – 29999. The previous default range of 60000 – 61799 still applies to earlier releases that have upgraded to X8.1.

Delegated credential checking for device authentication (SIP only)

By default, the VCS uses the relevant credential checking mechanisms (local database, Active Directory Service or H.350 directory via LDAP) on the VCS performing the authentication challenge.

Alternatively you can now configure the VCS so that the credential checking of SIP messages is delegated, via a traversal zone, to another VCS. Delegated credential checking is useful in deployments where you want to allow devices to register on a VCS Expressway, but for security you want all communications with authentication systems (such as an Active Directory server) to be performed inside the enterprise.

Credential checking for both Digest and NTLM messages may be delegated.

Automated protection

An automated intrusion protection feature has been added. It can be used to detect and block malicious traffic and to help protect the VCS from dictionary-based attempts to breach login security.

It works by parsing the system's log files to look for repeated failures to access specific service categories, such as SIP, SSH and web/HTTPS access. When the number of failures within a specified time window reaches the configured threshold, the source host address (the intruder) is blocked for a period of time. You can configure sets of addresses that are exempted always from one or more categories.

Automated protection should be used in combination with the existing firewall rules feature - use automated protection to temporarily block specific threats and use firewall rules to block permanently a range of known host addresses.

Licensing of audio-only SIP traversal calls

Audio-only SIP traversal calls are now treated distinctly from video SIP traversal calls. Each traversal call license allows either 1 video call or 2 audio-only SIP calls. Hence, a 100 traversal call license would allow, for example, 90 video and 20 SIP audio-only simultaneous calls. Any other audio-only call (non-traversal, H.323 or interworked) will consume a standard video call license (traversal or non-traversal as appropriate).

The **Overview** and **Resource usage** pages show separate counts for video and audio-only SIP traversal calls.

Note that:

- VCS defines an "audio-only" SIP call as one that was negotiated with a single “m=” line in the SDP. Thus, for example, if a person makes a “telephone” call but the SIP UA includes an additional m= line in the SDP, the call will consume a video call license.
- While an "audio-only" SIP call is being established, it is treated (licensed) as a video call. It only becomes licensed as "audio-only" when the call setup has completed. This means that if your system approaches its maximum licensed limit, you may be unable to connect some "audio-only" calls if they are made simultaneously.

TMS Agent functionality removed

TMS Agent (legacy mode) functionality has been removed. Instead, if you use TMS provisioning, you must use TMS Provisioning Extension services.

Java application removed

The Java application has been removed. This removes the threat of Java security vulnerabilities.

OCS Relay functionality and Microsoft OCS 2007 zone profile removed

OCS Relay functionality and the Microsoft Office Communications Server 2007 zone profile have been removed. The Cisco AM GW configuration options previously under the VCS configuration menu, and the Cisco Advanced Media Gateway zone profile have also been removed.

Instead, we recommend that you use the Microsoft Lync B2BUA to route SIP calls between the VCS and a Microsoft Lync Server, and to configure your Cisco AM GWs as B2BUA transcoders. Note that B2BUA connections to Microsoft OCS are no longer supported from X8.1.

Support for Active Control

VCS supports Active Control (iX Channel passthrough) as supported by Cisco TelePresence Server 3.1 or later and endpoints running TC6.2 or later. It can be configured on a per-zone basis.

FIPS140-2 cryptographic mode

VCS has implemented FIPS140-2 compliant features.

New VMware installations

New VMware installations have a choice of 3 .ova files: **Small** (for Cisco Business Edition 6000 deployments), **Medium** (for typical deployments) or **Large** (for large-scale deployments). Note that the VM .ova files are used for new installations only. Do not use them to upgrade your existing VM installation.

See *VCS on Virtual Machine Installation Guide* for information about deploying on UCS tested reference configurations and their associated memory and CPU resource reservation requirements.

ICE messaging support

ICE messaging support is now configurable at the zone and subzone level.

Certificate management

The certificate management pages are now located under **Maintenance > Security certificates**:

- The management of CA certificates has been improved, allowing you to view, upload and delete individual CA certificates.
- The VCS's server and trusted CA certificates can be viewed in either a human-readable, decoded format, or in their raw, PEM format.

Other enhancements and usability improvements

- The online help has a new skin and an improved search capability.
- There is a new *Cisco Unified Communications Manager (8.6.1 or later)* zone profile. This profile supports BFCP and should be used in SIP trunk neighbor zones to Unified CM running version 8.6.1 or later.
- The ephemeral port range can be configured via the web interface (**System > Administration**).
- Maintenance mode can be configured via the web interface (**Maintenance > Maintenance mode**).
- The Microsoft Lync B2BUA supports multiple TURN servers.
- The **Lync B2BUA status** page now shows the number of active calls, and resource usage as a percentage of the number of allowed Lync B2BUA calls.
- A B2BUA service restart is no longer required to enable changes to the list of trusted hosts to take effect.
- A contact email address and a proxy server can be specified when configuring the incident reporting server.
- The DNS cache is flushed automatically whenever any DNS configuration is changed (**System > DNS**). The **DNS** page also contains a manual option to flush the DNS cache.
- When logging in, you now have to choose the administrator login option only if you are using "standalone FindMe" i.e. FindMe without Cisco TMSPE.
- CPL location node supports regex-based source alias rewriting.
- Active Directory Service configuration: you can specify an override value for the NetBIOS machine name if the **System host name**, which is used as the default name, exceeds 15 characters.
- Previously-installed language packs can be deleted.
- The VCS Starter Pack Express supports device provisioning for SX20 endpoints. Note: this is a preview feature.
- You have the option to take a tcpdump while diagnostic logging is in progress.
- SIP network logging at the DEBUG level now includes the local address and port (as well as the destination/source information).
- You can specify the transport type to use for SIP calls from a DNS zone, when DNS NAPTR records and SIP URI parameters do not provide the preferred transport information.
- The VCS supports time-limited option keys. The options keys page displays the validity period of each key. All pre-existing option keys have an *Unlimited* validity period.
- Filtering options are only displayed on status and list pages if there is more than one page of information to display. Status and list pages show 200 records per page, except for Log pages which show 1000 records per page.
- When configuring firewall rules:
  - You can choose whether to drop or reject denied traffic. Note that on upgrade to X8.1, any existing "deny" rules will now drop the traffic; prior to X8.1 the traffic would have been rejected.
  - If you have made several changes there is now an option to revert all changes. This discards all pending changes and resets the working copy of the rules to match the current active rules.
  - You can more easily change the order of the rules by using up/down arrow buttons to swap the priorities

of adjacent rules.
- Rules can be configured for XMPP traffic.

- The **Search rules** page now indicates if the target zone of a rule is unavailable.
- Port conflict alarms now indicate the exact features and ports that are in conflict.
- When performing a system backup, the backup filename is now prefixed by the software version number.
- The application now uses CiscoSSL (instead of OpenSSL).
- The xConfiguration and xCommand CLI command sets removed in version X7.2 have been reinstated.
- When using CPL to modify the source URL of a From header, any corresponding display name is also modified to match the username part of the modified source URL.
- Improved web interface usability when switching between SRV and address record resolution modes when configuring the address of an LDAP server for remote user account authentication.

Changed functionality

- For new installations of X8.1 or later, the default range for **ephemeral ports** is 30000 – 35999. Prior to X8.1, the default range was 40000 – 49999. Existing systems upgraded to X8.1 or later will preserve their previous port ranges.
- The **Dual Network Interfaces** option key is now called **Advanced Networking**. When the key is installed you can now configure the use of dual network interfaces separately from the use of static NAT.
- Most system configuration items are now peer-specific (they are not replicated across peers when the VCS is part of a cluster). See Specifying peer-specific items in clustered systems [p.188] for more information.
- New installations of VCS software now ship with a temporary trusted CA, and a server certificate issued by that temporary CA. We strongly recommend that you replace the server certificate with one generated by a trusted certificate authority, and that you install CA certificates for the authorities that you trust. If you upgrade to this release from an earlier installation of VCS software, your existing server and trusted CA certificates will not be affected.
- When configuring the sources for administrator account authentication, the *Remote* option is now labeled as *Remote only*.
  This also means you can no longer access the VCS via the default **admin** account if a *Remote only* authentication source is in use. The *Local* option has also been renamed to *Local only*. Note: do not use *Remote only* if VCS is managed by Cisco TMS.
- The **Reboot**, **Restart** and **Shutdown** maintenance options have been combined into one **Restart options** page.
- When starting a diagnostic log, the relevant system modules now have their log levels automatically set to "debug" and are automatically reset to their original values when logging is stopped.
- You can no longer access the system over Telnet.
- The **Expressway** option key is now called **Traversal Server**.
- The DNS **Local host name** is now referred to as the **System host name**.
- *Auditor* access level now includes the **Alarms** page.
- The login account configuration pages are now accessed under a new top-level **Users** menu (previously under **Maintenance > Login accounts**).
- The **Clustering** page is now accessed under the **System** menu.
- The **System administration** page is now accessed under **System > Administration**.
- The **Firewall rules configuration** pages are now accessed under **System > Protection**.
- The **VCS configuration** menu is now called just **Configuration**.

- The **SIP** page is now accessed directly via **Configuration > Protocols > SIP** and the **Domains** page is now accessed via **Configuration > Domains**.
- The **Calls** page and menu is now called **Call routing**. **Call routed mode** is now called **Call signaling optimization** and the options are *On* and *Off*.
- On the VCS Expressway, the **VCS configuration > Expressway** menu is now **Configuration > Traversal**.
- All references to **OCS/Lync B2BUA** have been renamed to refer to **Lync B2BUA**. The **Enhanced OCS Collaboration** option key is now called **Microsoft Interoperability**.
- References to 'Movi' have been changed to 'Jabber Video'.
- The **FindMe configuration** page is now accessed directly under **Applications > FindMe**.
- On the **Upgrade** page, the **VCS platform** component is now referred to as **System platform**.
- The **Advanced account security** page is now called **Advanced security** and is accessed via **Maintenance > Advanced security**.
- The **Local VCS inbound ports** page is now called **Local inbound ports**, and the **Local VCS outbound ports** page is now called **Local outbound ports**.
- The advanced zone configuration **Empty INVITE allowed** setting is now referred to as **Send empty INVITE for interworked calls**.
- The following settings have been removed from the **SIP configuration** page: **Require UDP BFCP mode** and **Require Duo Video mode**. They existed to provide support for interoperability issues with old versions of Cisco TelePresence MXP endpoints. These settings can still be configured via the CLI if necessary.
- The **Login account authentication configuration** page has been removed, and the **Administrator authentication source** and **FindMe authentication source** settings are now on the **Login account LDAP configuration** page.
- The `xConfiguration Interworking Require Invite Header Mode` is now `Off` by default.
- The **Directory** option has been removed from the list of restriction policies on the **Registration configuration** page and the list of Call Policy modes on the **Call Policy configuration** page.
- The DNS lookup tool includes Unified Communications SRV services.

X7.2.1

The VCS Starter Pack Express supports Cisco Jabber for iPad.

X7.2

Controlled SIP TLS connections to the Default Zone

Default Zone access rules that control which external systems are allowed to connect over SIP TLS to the VCS via the Default Zone can now be configured.

Each rule specifies a pattern type and string that is compared to the identities (Subject Common Name and any Subject Alternative Names) contained within the certificate presented by the external system. You can then allow or deny access to systems whose certificates match the specified pattern.

Device authentication

- The VCS can now be configured to authenticate devices against multiple remote H.350 directory servers. This provides a redundancy mechanism in the event of reachability problems to an H.350 directory server.

- As from version X7.2, the VCS attempts to verify device credentials presented to it (for Digest authentication) by first checking against its on-box local database of usernames and passwords, before checking against any configured H.350 directory server. As a result of this:
  - The **Device authentication configuration** page no longer exists; there is no longer an option to switch between an authentication database type of *Local database* or *LDAP database*.
  - The **NTLM protocol challenges** setting is now configured on the **Active Directory Service** page.
- The **Device LDAP configuration** and **Device LDAP schemas** pages are now called **Device authentication H.350 configuration** and **Device authentication H.350 schemas** respectively.
- The **Alias origin** field on the **Device authentication H.350 configuration page** is now called **Source of aliases for registration**.

Enhanced account security

- Administrator accounts can now be configured to authenticate first against the local database and then if no matching account is found to fall back to a check against the external credentials directory.
- When defining administrator accounts and groups, you can now also specify if the account/group can access the web interface and/or the XML/REST APIs.
- When strict passwords are enforced for administrator accounts, you can now customize the rules for what constitutes a strict password.
- Local administrator passwords are now stored using a SHA512 hash.
- In a cluster, the default **admin** account password is now replicated across all peers.
- Note that the `Login Administrator` set of `xConfiguration` CLI commands are no longer supported.

System security enhancements

- You can now configure firewall rules to control access to the VCS at the IP level. You can:
  - specify the source IP address subnet from which to allow or deny traffic
  - configure well known services such as SSH, HTTP/HTTPS or specify customized rules based on transport protocols and port ranges
- The VCS can be configured to use a combination of OCSP and CRL checking for certificates exchanged during SIP TLS connection establishment. CRLs can be loaded manually onto the VCS, downloaded automatically from preconfigured URIs, or downloaded automatically from a CRL distribution point (CDP).
- The VCS can now generate server certificate signing requests. This removes the need to use an external mechanism to generate and obtain certificate requests. The upload of the VCS's trusted CA certificate and the management of its server certificate are now configured on separate pages under the **Maintenance > Certificate management** menu.
- When enabling client certificate-based security you can now configure CRL checking behavior.
- VCS can now be configured to use HTTP Strict Transport Security (HSTS). This can be used to force a web browser to communicate with the VCS using secure connections only.
- Access to the VCS via the serial port can be disabled.
- You can configure the authentication method used by the VCS when connecting to an NTP server. It utilizes the security features available in NTPv4 and retains compatibility with NTPv3 implementations. Options include symmetric key message hashing and private key encryption.
- System backup files can now be encrypted / password protected.
- OpenSSL has been updated to version 1.0.1b (includes support for TLS v1.2).

Zone and subzone media encryption policy

Media encryption policy settings allow you to selectively add or remove media encryption capabilities for SIP calls flowing through the VCS. This allows you to configure your system so that, for example, all traffic arriving or leaving the VCS Expressway from the public internet is encrypted, but is unencrypted when in your private network. The policy is configured on a per zone/subzone basis; this level of granularity means that different encryption policies could be applied to each leg of a call in/out of a zone/subzone.

Call processing

When configuring search rules you can now specify:

- The source protocol for which the rule applies.
- A specific source zone or subzone for which the rule applies.

Improved interworking flow control

The VCS now supports the ability to interwork the H.323 flowControlCommand into RFC 5104 Temporary Maximum Media Stream Bit Rate Request (TMMBR). This provides the ability to stem the flow of data from a remote participant.

Enhanced diagnostics

- There is an improved filter mechanism for call and registration status management.
- Search history shows additional information including search start timestamps and durations, and improved reporting of search failure reasons.
- A Tracepath network utility has been added (to complement the existing traceroute tool).
- The Locate tool now allows you to specify a specific subzone (or zone) as the source of the search request.
- The VCS now supports IETF format messages when sending events to remote syslog servers. Note that the **Logging** page is now located under the **Maintenance** menu.
- When a diagnostic log file is downloaded, the filename now includes the local host name; this helps distinguish it from diagnostic files downloaded from other cluster peers.
- Core dump mode is now enabled by default. It can be configured on the **Incident reporting configuration** page; it can no longer be configured via the CLI.
- System snapshot files now include a list of active alarms.

Other enhancements and usability improvements

- The default Traversal Subzone media port range is now 50000 - 54999 (previously 50000 - 52399), in order to support the new media encryption policy feature. To reflect this change, system administrators may need to modify the rules configured in their firewall devices.
- Up to 20 policy services can now be configured (the limit was 5 previously).
- When configuring a DNS zone you can now specify a **TLS verify subject name** to use when verifying the destination system server's certificate.
- The %ip% pattern matching variables now apply to all peer addresses if the VCS is part of a cluster; when used in a replace string the variable is always substituted with the address of the local peer only.
- The Microsoft B2BUA now supports up to 100 simultaneous calls (the limit was 50 previously); however, calls that use transcoder resources count as 2 calls.
- TURN server now has full IPv6 support (as per *RFC 6156*). The **TURN relays status** page displays the addresses on which the TURN server is listening, and the addresses from which it is allocating relays.
- The VCS now supports early dialog SIP UPDATE messages. Note that the relevant zone must be configured with **SIP UPDATE strip mode** set to *Off* (set via the *Custom* zone profile).

- Automatic CRL updates can now use HTTPS distribution points.
- DNS queries can now be configured to use the ephemeral port range or to use a customized range.
- The **Clustering** page displays the name (in addition to the address) of all of the peers.
- The SIP **Domains** page includes an **Index** column that corresponds to the numeric elements of the %localdomain1%,%localdomain2%, . . . %localdomain200% pattern matching variables.
- When upgrading software components, the MD5 and SHA1 hash values of the software image file being uploaded are displayed for user verification (when upgrading from X7.2 or later).
- There is no longer a need to restart the VCS after uploading a language pack.

Support for some xConfiguration commands removed

The following xConfiguration CLI command sets are no longer supported:

- xConfiguration Administration HTTPS RequireClientCertificate
- xConfiguration Administration MaxConcurrentSessions
- xConfiguration Administration TimeOut
- xConfiguration Authentication Database
- xConfiguration Authentication LDAP BaseDN
- xConfiguration Certification AdvancedAccountSecurity
- xConfiguration Core Dump Mode
- xConfiguration Error Reports
- xConfiguration IP DNS Server
- xConfiguration LDAP
- xConfiguration Log
- xConfiguration Login Administrator
- xConfiguration Login User
- xConfiguration NTP Address
- xConfiguration SNMP
- xConfiguration SystemUnit AdminAccount
- xConfiguration SystemUnit Password
- xConfiguration SystemUnit StrictPassword
- xConfiguration TimeZone Name

X7.1

Cisco TMS Provisioning Extension support

VCS X7.1 supports the Provisioning Extension mode introduced into Cisco TMS v13.2.

In X7.0 and earlier, the provisioning, FindMe and phone book services on the VCS were provided by the legacy TMS Agent module. From X7.1, the new Provisioning Extension services mechanism supports large-scale deployments and provides a more flexible upgrade path for both VCS and Cisco TMS.

You are recommended to switch from using the TMS Agent legacy mode to the new Provisioning Extension mode as soon as is practicable.

Call processing

- Improved interworking between VCS and Cisco Unified Communications Manager. VCS now always stays in the call signaling route for calls to neighbor zones that are configured with the *Cisco Unified Communications Manager* or the *Infrastructure device* zone profiles.

Virtual appliance support

- The VCS can run on VMware on Cisco UCS C200 M2 and UCS C210 M2 servers.

Other enhancements and usability improvements

- Improved status reporting of NTP server synchronization.
- The lower and upper source ports in the range used for sending DNS queries can now be configured on the **DNS** page.
- Automatically uploaded CRL files are now included when checking the validity of client certificates on the **Client certificate testing** page.
- System snapshot:
  - The snapshot process now runs in the background. This means you can navigate away from the snapshot page and return to it later to download the generated snapshot file.
  - Snapshot filenames are distinct for each type of snapshot.
- Default incident reporting server is now https://cc-reports.cisco.com/submitapplicationerror/
- The VCS Starter Pack Express supports device provisioning for MX200 endpoints.
- An optional free-form description of a B2BUA transcoder can be specified.
- Alarms status page now shows when an alarm was first raised.
- The VCS web interface now supports Internet Explorer 7, 8 or 9, Firefox 3 or later, or Chrome. Later versions of these browsers may also work, but are not officially supported.
- Session log in and log out entries in the Event Log now show the IP address of the source client.

X7

Device authentication using an Active Directory Service for Jabber Video endpoints

Device authentication can be performed using a direct connection between the VCS and an Active Directory Service (ADS). This allows Jabber Video 4.2 (or later) endpoint users to use their Windows Active Directory (AD) credentials to authenticate with the VCS.

This means that Jabber Video users do not need a separate set of authentication credentials (username and password) for their Jabber Video endpoint - instead they can use the same credentials for both Windows and Jabber Video. See Using Active Directory database (direct) [p.148] for more information.

Previously this feature was only configurable via the CLI, from X7.0 it can be configured via the web interface.

Shared cluster licenses

Call licenses are now shared across the entire VCS cluster.

Traversal and non-traversal call license option keys are still installed on each individual peer and are subject to per-peer limits, but the licenses are available to all peers in the cluster. See License usage within a cluster [p.184] for more information. Note that any other option keys (FindMe, for example) must still be installed identically on each cluster peer, as before.

Microsoft Edge Server support via B2BUA for Microsoft OCS/Lync

Support for Microsoft Edge Server communications has been added via the introduction of a back-to-back user agent (B2BUA) application. The B2BUA provides interworking between Microsoft ICE (used when MOC / Lync clients communicate through the Edge Server) and media for communications with standard video endpoints. The B2BUA also provides call hold, call transfer and Multiway support for calls with OCS/Lync clients, and can share FindMe presence information with OCS/Lync. See Microsoft Lync B2BUA [p.268] for more information.

Presence User Agent

You can now configure the **Default published status for registered endpoints** to be either *Online* or *Offline*. This is the presentity status published by the Presence User Agent for registered endpoints when they are not "In-Call". See Configuring Presence [p.264] for more information.

Enhanced SIP registration expiry controls

New SIP registration settings on the **SIP** page (**Configuration > Protocols > SIP > Configuration**) allow you to configure how the VCS calculates the expiry period for SIP registration requests. These settings enable the system to balance the load of registration and re-registration requests. They can be configured separately for standard and Outbound registration connections.

These settings supersede the previous **Registration expire delta** setting.

Improved diagnostics

A range of tools have been introduced to improve troubleshooting.

Diagnostic logging

Additional diagnostic tools have been introduced under a new **Maintenance > Diagnostics** menu structure:

- There is a **Diagnostic logging** tool (**Maintenance > Diagnostics > Diagnostic logging**) that can be used to assist in troubleshooting system issues. It allows you to generate a diagnostic log of system activity over a period of time, and then to download the log so that it can be sent to your Cisco customer support representative.
- You can configure log levels for specific **Network Log** and **Support Log** modules. Note that these are advanced logging configuration options and should only be changed on the advice of Cisco customer support.
- The existing **System snapshot** and **Incident reporting** options have been moved under the new **Maintenance > Diagnostics** menu structure.
- The **System snapshot** tool can now generate three types of snapshot: system status, system logs or a full snapshot.

Network utilities

The following network utility tools have been introduced under **Maintenance > Tools > Network utilities**:

- Ping: allows you to check that a particular host system is contactable from the VCS and that your network is correctly configured to reach it.
- Traceroute: allows you to discover the route taken by a network packet sent from the VCS to a particular destination host system.
- DNS lookup: allows you to check which domain name server (DNS server) is responding to a request for a particular hostname.

Alarms (warnings)

- Warnings are now referred to as alarms.
- The alarm icon in the menu bar indicates the current number of unacknowledged alarms.
- The **Alarms** page indicates when an alarm was last raised and the number of times it has occurred since the last restart.
- In a clustered VCS system the **Alarms** page shows all of the alarms raised by any of the cluster peers. Only those alarms that have been raised by the "current" peer can be acknowledged.

GRUU (Globally Routable User Agent URI) support

The VCS has implemented the Public GRUU element of *RFC 5627*: *Obtaining and Using Globally Routable User Agent URIs (GRUUs) in the Session Initiation Protocol (SIP)*.

A GRUU is a SIP URI that can be used anywhere on the internet to route a request to a specific AOR instance. Note that the registering domain must be globally routable in order for the VCS to support GRUU.

Improved DNS subsystem

The DNS subsystem within the VCS has been re-structured and improved to be standards compliant. It provides the ability to specify explicit upstream DNS servers for specified domains.

Improved NTP synchronization

The VCS can now be configured to connect to up to 5 standards-based NTP server addresses.

TMS Agent database credentials included within local authentication database lookups

In addition to any manually created entries, the Cisco VCS now checks credentials stored within the TMS Agent database when the device authentication database type is set to *Local database*.

This makes it easier to enable authentication on the Cisco VCS when provisioning is using passwords originating from TMS.

Other enhancements and usability improvements

- You can now configure up to 200 SIP domains.
- You can now configure up to 10,000 local authentication database credentials.
- Full support of *RFC 5806*: any SIP diversion headers received in a 302 response are now maintained in the outgoing INVITE message.
- Improved zone status reporting: the zones summary page now shows separate SIP and H.323 connection status information.
- Table sorting indicators: tabular displays now indicate by which column each table is sorted.
- A filter facility has been added to the **Subzones** list page.
- Chrome web browser is now supported; Internet Explorer 6 is no longer officially supported.
- The administrator no longer has to log out and log back in again after reconfiguring DNS server addresses.
- There is a new **Call signaling routed mode** advanced zone profile setting for neighbor zones. It controls whether the zone always takes the signaling or uses the system-wide **Call routed mode** setting.
- There is a new **H.323 call signaling port** advanced zone profile setting for neighbor zones. It identifies the call signaling port on the neighbor system to use if **Automatically respond to H.323 searches** is set to *On*.
- SSH and SCP clients are no longer available in the VCS operating system.
- Reverse Path Filtering (RFC1812) is enabled by default. This ensures that the VCS will only accept

packets on interfaces from source addresses to which there are valid routes in the routing table for that interface. This change may necessitate the adding of additional static routes on dual-interface VCSs to ensure the VCS routing table matches the network topology.

Related documentation

The following table lists documents and web sites referenced in this document, and other supporting documentation. All documentation for the latest version of VCS can be found at www.cisco.com.

Title	Link
VCS Administrator Guide (this document)	www.cisco.com
Cisco TMS Provisioning Extension Deployment Guide	www.cisco.com
Authenticating VCS Accounts Using LDAP Deployment Guide	www.cisco.com
Basic Configuration - Single VCS Control Deployment Guide	www.cisco.com
Basic Configuration - VCS Expressway with VCS Control Deployment Guide	www.cisco.com
VCS Certificate Creation and Use Deployment Guide	www.cisco.com
Cisco Unified Communications Manager with VCS Deployment Guide	www.cisco.com
VCS and Cisco Unity Connection Voicemail Integration Deployment Guide	www.cisco.com
VCS Cluster Creation and Maintenance Deployment Guide	www.cisco.com
Device Authentication on VCS Deployment Guide	www.cisco.com
ENUM Dialing on VCS Deployment Guide	www.cisco.com
External Policy on VCS Deployment Guide	www.cisco.com
FindMe Deployment Guide	www.cisco.com
VCS Getting Started Guide	www.cisco.com
VCS CE500 Appliance Installation Guide	www.cisco.com
VCS CE1000 Appliance Installation Guide	www.cisco.com
VCS IP Port Usage for Firewall Traversal	www.cisco.com
Microsoft Lync 2010, Cisco AM GW and VCS Deployment Guide	www.cisco.com
Microsoft Lync and VCS Deployment Guide	www.cisco.com
Multiway Deployment Guide	www.cisco.com
VCS Starter Pack Express Deployment Guide	www.cisco.com
Unified Communications: Mobile and Remote Access via VCS Deployment Guide	www.cisco.com
VCS on Virtual Machine Installation Guide	www.cisco.com
DNS and BIND Fourth Edition, Albitz and Liu, O'Reilly and Associates, ISBN: 0-596-00158-4	
ITU Specification: H.235 Security and encryption for H-Series multimedia terminals	http://www.itu.int/rec/ T-REC-H.235/en
ITU Specification: H.323: Packet-based multimedia communications systems	http://www.itu.int/rec/ T-REC-H.323/en
ITU Specification: H.350 Directory services architecture for multimedia conferencing	http://www.itu.int/rec/ T-REC-H.350/en

Title	Link
Management Information Base for Network Management of TCP/IP-based internets: MIB-II	http://tools.ietf.org/html/rfc1213
Network Time Protocol website	http://www.ntp.org/
PHP regex guidelines	http://php.net/manual/en/book.pcre.php
Regular Expression Pocket Reference ISBN-10: 0596514271 ISBN-13: 978-0596514273	
RFC 791: Internet Protocol	http://tools.ietf.org/html/rfc791
RFC 1305: Network Time Protocol	http://tools.ietf.org/html/rfc1305
RFC 2460: Internet Protocol, Version 6 (IPv6) Specification	http://tools.ietf.org/html/rfc2460
RFC 2782: A DNS RR for specifying the location of services (DNS SRV)	http://tools.ietf.org/html/rfc2782
RFC 2915: The Naming Authority Pointer (NAPTR) DNS Resource Record	http://tools.ietf.org/html/rfc2915
RFC 3164: The BSD syslog Protocol	http://tools.ietf.org/html/rfc3164
RFC 3261: SIP: Session Initiation Protocol	http://tools.ietf.org/html/rfc3261
RFC 3263: Session Initiation Protocol (SIP): Locating SIP Servers	http://tools.ietf.org/html/rfc3263
RFC 3326: The Reason Header Field for the Session Initiation Protocol (SIP)	http://tools.ietf.org/html/rfc3326
RFC 3327: Session Initiation Protocol (SIP) Extension Header Field for Registering Non-Adjacent Contacts	http://tools.ietf.org/html/rfc3327
RFC 3489: STUN - Simple Traversal of User Datagram Protocol (UDP) Through NATs	http://tools.ietf.org/html/rfc3489
RFC 3550: RTP: A Transport Protocol for Real-Time Applications	http://tools.ietf.org/html/rfc3550
RFC 3761: The E.164 to URI Dynamic Delegation Discovery System (DDDS) Application (ENUM)	http://tools.ietf.org/html/rfc3761
RFC 3880: Call Processing Language (CPL): A Language for User Control of Internet Telephony Services	http://tools.ietf.org/html/rfc3880
RFC 4028: Session Timers in the Session Initiation Protocol (SIP)	http://tools.ietf.org/html/rfc4028
RFC 4787: Network Address Translation (NAT) Behavioral Requirements for Unicast UDP	http://tools.ietf.org/html/rfc4787
RFC 5245: Interactive Connectivity Establishment (ICE)	http://tools.ietf.org/html/rfc5245
RFC 5626: Managing Client-Initiated Connections in the Session Initiation Protocol (SIP)	http://tools.ietf.org/html/rfc5626
RFC 5627: Obtaining and Using Globally Routable User Agent URIs (GRUUs) in SIP	http://tools.ietf.org/html/rfc5627
RFC 5806: Diversion Indication in SIP	http://tools.ietf.org/html/rfc5806
Session Traversal Utilities for NAT (STUN)	http://tools.ietf.org/html/rfc5389
Traversal Using Relays around NAT (TURN): Relay Extensions to Session Traversal Utilities for NAT (STUN)	http://tools.ietf.org/html/rfc5766

Legal notices

Intellectual property rights

This Administrator Guide and the product to which it relates contain information that is proprietary to TANDBERG and its licensors. Information regarding the product is found below in the **Copyright notice** and **Patent information** sections.

TANDBERG® is a registered trademark belonging to Tandberg ASA. Other trademarks used in this document are the property of their respective holders. This Guide may be reproduced in its entirety, including all copyright and intellectual property notices, in limited quantities in connection with the use of this product. Except for the limited exception set forth in the previous sentence, no part of this Guide may be reproduced, stored in a retrieval system, or transmitted, in any form, or by any means, electronically, mechanically, by photocopying, or otherwise, without the prior written permission of TANDBERG.

COPYRIGHT © TANDBERG

Copyright notice

The product that is covered by this Administrator Guide is protected under copyright, patent, and other intellectual property rights of various jurisdictions.

This product is Copyright © 2014, Tandberg Telecom UK Limited. All rights reserved.

TANDBERG is now part of Cisco. Tandberg Telecom UK Limited is a wholly owned subsidiary of Cisco Systems, Inc.

The terms and conditions of use can be found at:
http://www.cisco.com/en/US/docs/telepresence/infrastructure/vcs/license_info/Cisco_VCS_EULA.pdf.

This product includes copyrighted software licensed from others. A list of the licenses and notices for open source software used in this product can be found at:
http://www.cisco.com/en/US/products/ps11337/products_licensing_information_listing.html.

This product includes software developed by Computing Services at Carnegie Mellon University (http://www.cmu.edu/computing/).

This product includes software developed by the University of California, Berkeley and its contributors.

IMPORTANT: USE OF THIS PRODUCT IS SUBJECT IN ALL CASES TO THE COPYRIGHT RIGHTS AND THE TERMS AND CONDITIONS OF USE REFERRED TO ABOVE. USE OF THIS PRODUCT CONSTITUTES AGREEMENT TO SUCH TERMS AND CONDITIONS.

AVC Video License

With respect to each AVC/H.264 product, we are obligated to provide the following notice:

This product is licensed under the AVC patent portfolio license for the personal use of a consumer or other uses in which it does not receive remuneration to (i) encode video in compliance with the AVC standard ("AVC video") and/or (ii) decode AVC video that was encoded by a consumer engaged in a personal activity and/or was obtained from a video provider licensed to provide AVC video. No license is granted or shall be implied for any other use. Additional information may be obtained from MPEG LA, L.L.C.

See http://www.mpegla.com.

Accordingly, please be advised that service providers, content providers, and broadcasters are required to obtain a separate use license from MPEG LA prior to any use of AVC/H.264 encoders and/or decoders.

Patent information

This product is covered by one or more of the following patents:

- US7,512,708
- EP1305927
- EP1338127

THE SPECIFICATIONS AND INFORMATION REGARDING THE PRODUCTS IN THIS MANUAL ARE SUBJECT TO CHANGE WITHOUT NOTICE. ALL STATEMENTS, INFORMATION, AND RECOMMENDATIONS IN THIS MANUAL ARE BELIEVED TO BE ACCURATE BUT ARE PRESENTED WITHOUT WARRANTY OF ANY KIND, EXPRESS OR IMPLIED. USERS MUST TAKE FULL RESPONSIBILITY FOR THEIR APPLICATION OF ANY PRODUCTS.

THE SOFTWARE LICENSE AND LIMITED WARRANTY FOR THE ACCOMPANYING PRODUCT ARE SET FORTH IN THE INFORMATION PACKET THAT SHIPPED WITH THE PRODUCT AND ARE INCORPORATED HEREIN BY THIS REFERENCE. IF YOU ARE UNABLE TO LOCATE THE SOFTWARE LICENSE OR LIMITED WARRANTY, CONTACT YOUR CISCO REPRESENTATIVE FOR A COPY.

The Cisco implementation of TCP header compression is an adaptation of a program developed by the University of California, Berkeley (UCB) as part of UCB's public domain version of the UNIX operating system. All rights reserved. Copyright © 1981, Regents of the University of California.

NOTWITHSTANDING ANY OTHER WARRANTY HEREIN, ALL DOCUMENT FILES AND SOFTWARE OF THESE SUPPLIERS ARE PROVIDED "AS IS" WITH ALL FAULTS. CISCO AND THE ABOVE-NAMED SUPPLIERS DISCLAIM ALL WARRANTIES, EXPRESSED OR IMPLIED, INCLUDING, WITHOUT LIMITATION, THOSE OF MERCHANTABILITY, FITNESS FOR A PARTICULAR PURPOSE AND NONINFRINGEMENT OR ARISING FROM A COURSE OF DEALING, USAGE, OR TRADE PRACTICE.

IN NO EVENT SHALL CISCO OR ITS SUPPLIERS BE LIABLE FOR ANY INDIRECT, SPECIAL, CONSEQUENTIAL, OR INCIDENTAL DAMAGES, INCLUDING, WITHOUT LIMITATION, LOST PROFITS OR LOSS OR DAMAGE TO DATA ARISING OUT OF THE USE OR INABILITY TO USE THIS MANUAL, EVEN IF CISCO OR ITS SUPPLIERS HAVE BEEN ADVISED OF THE POSSIBILITY OF SUCH DAMAGES.

Cisco and the Cisco Logo are trademarks of Cisco Systems, Inc. and/or its affiliates in the U.S. and other countries. A listing of Cisco's trademarks can be found at www.cisco.com/go/trademarks. Third party trademarks mentioned are the property of their respective owners. The use of the word partner does not imply a partnership relationship between Cisco and any other company. (1005R)

Any Internet Protocol (IP) addresses and phone numbers used in this document are not intended to be actual addresses and phone numbers. Any examples, command display output, network topology diagrams, and other figures included in the document are shown for illustrative purposes only. Any use of actual IP addresses or phone numbers in illustrative content is unintentional and coincidental.

© 2014 Cisco Systems, Inc. All rights reserved.