Cisco Prime OSS Integration Guide for MTOSI and 3GPP

Version 6.1

February, 2018

Americas Headquarters
Cisco Systems, Inc.
170 West Tasman Drive
San Jose, CA 95134-1706
USA
http://www.cisco.com
Tel: 408 526-4000
800 553-NETS (6387)
Fax: 408 527-0883

Text Part Number: OL-31029-01

Abstract

The Cisco Prime OSS Integration Guide for MTOSI and 3GPP gives information on OSS Integration using 3GPP and MTOSI north bound interfaces.

THE SPECIFICATIONS AND INFORMATION REGARDING THE PRODUCTS IN THIS MANUAL ARE SUBJECT TO CHANGE WITHOUT NOTICE. ALL STATEMENTS, INFORMATION, AND RECOMMENDATIONS IN THIS MANUAL ARE BELIEVED TO BE ACCURATE BUT ARE PRESENTED WITHOUT WARRANTY OF ANY KIND, EXPRESS OR IMPLIED. USERS MUST TAKE FULL RESPONSIBILITY FOR THEIR APPLICATION OF ANY PRODUCTS.

THE SOFTWARE LICENSE AND LIMITED WARRANTY FOR THE ACCOMPANYING PRODUCT ARE SET FORTH IN THE INFORMATION PACKET THAT SHIPPED WITH THE PRODUCT AND ARE INCORPORATED HEREIN BY THIS REFERENCE. IF YOU ARE UNABLE TO LOCATE THE SOFTWARE LICENSE OR LIMITED WARRANTY, CONTACT YOUR CISCO REPRESENTATIVE FOR A COPY.

NOTWITHSTANDING ANY OTHER WARRANTY HEREIN, ALL DOCUMENT FILES AND SOFTWARE OF THESE SUPPLIERS ARE PROVIDED “AS IS” WITH ALL FAULTS. CISCO AND THE ABOVE-NAMED SUPPLIERS DISCLAIM ALL WARRANTIES, EXPRESSED OR IMPLIED, INCLUDING, WITHOUT LIMITATION, THOSE OF MERCHANTABILITY, FITNESS FOR A PARTICULAR PURPOSE AND NON-INFRINGEMENT OR ARISING FROM A COURSE OF DEALING, USAGE, OR TRADE PRACTICE.

IN NO EVENT SHALL CISCO OR ITS SUPPLIERS BE LIABLE FOR ANY INDIRECT, SPECIAL, CONSEQUENTIAL, OR INCIDENTAL DAMAGES, INCLUDING, WITHOUT LIMITATION, LOST PROFITS OR LOSS OR DAMAGE TO DATA ARISING OUT OF THE USE OR INABILITY TO USE THIS MANUAL, EVEN IF CISCO OR ITS SUPPLIERS HAVE BEEN ADVISED OF THE POSSIBILITY OF SUCH DAMAGES.

Cisco and the Cisco logo are trademarks or registered trademarks of Cisco and/or its affiliates in the U.S. and other countries. To view a list of Cisco trademarks, go to this URL:www.cisco.com/go/trademarks. Third-party trademarks mentioned are the property of their respective owners. The use of the word partner does not imply a partnership relationship between Cisco and any other company. (1110R)

Any Internet Protocol (IP) addresses and phone numbers used in this document are not intended to be actual addresses and phone numbers. Any examples, command display output, network topology diagrams, and other figures included in the document are shown for illustrative purposes only. Any use of actual IP addresses or phone numbers in illustrative content is unintentional and coincidental.

Cisco Prime OSS Integration Guide for MTOSI and 3GPP
© 2018 Cisco Systems, Inc. All rights reserved.

Table of Contents

Table of Contents ..... *iii*

List Of Tables *7*

1 Preface *8*

2 Conventions *9*

3 Additional User Documentation *10*

4 Obtaining Documentation, Obtaining Support, and Security Guidelines *11*

5 Prime Network Integration Layer *12*

5.1 Standalone Mode **12**

5.2 Suite Mode **13**

6 Technologies *14*

7 3GPP OSS Integration *15*

7.1 Supported Devices for 3GPP Interface **15**

7.2 3GPPIntegration Reference Point (IRP) **16**

7.3 3GPP Interfaces and supported APIs **16**

7.4 3GPP APIs Support for Prime Central and Prime Network **17**

7.5 Overview of 3GPP Inventory Management **19**

7.5.1 Physical Inventory 19

7.5.2 Logical Inventory 19

7.6 3GPP Inventory IRP InterfaceDetails **20**

7.6.1 InventoryIRP:: getAllInventory 21

7.6.2 InventoryIRP:: getAllManagedElementNames 23

7.6.3 InventoryIRP:: getManagedElement 25

7.6.4 InventoryIRP:: getStatus 26

7.6.5 InventoryIRP:: getActiveOperations 27

7.7 Overview of 3GPP File Transfer IRP **28**

7.8 3GPP File Transfer IRP Interface Details **29**

7.8.1 File Transfer IRP::listAvailableFiles 29

7.9 Overview of 3GPP Alarm IRP **33**

7.10 3GPP Alarm IRP Interface Details **33**

7.10.1 AlarmIRP::GetAlarmList 33

7.10.2 Alarm IRP::acknowledgeAlarms 38

7.10.3 AlarmIRP::unacknowledgeAlarms 41

7.10.4 AlarmIRP::SetComment 44

7.10.5 AlarmIRP::clearAlarms 47

7.10.6 AlarmIRP:: notifyNewAlarm 50

7.10.7 AlarmIRP:: notifyAckStateChanged 52

7.10.8 AlarmIRP:: notifyClearedAlarm 53

7.10.9 AlarmIRP:: notifyUpdateAlarm 54
7.10.10 AlarmIRP :: notifyChangedAlarm 55

7.11 Overview of 3GPP Notification IRP 57

7.12 3GPP Notification IRP Details 57
7.12.1 Notification IRP::subscribe 57
7.12.2 Notification IRP::unsubscribe 60
7.12.3 Notification IRP::getSubscriptionIds 61
7.12.4 Notification IRP:: getNotificationCategories 62

7.13 3GPP FT Notification Consumer 63

7.14 Overview of 3GPP Notifications 63
7.14.1 3GPP File Ready Notification 63
7.14.2 3GPP File Preparation Error Notification 63
7.14.3 3GPP FT Notification Multi-DM Behavior 64

7.15 Overview of Communication Surveillance IRP (CS IRP) 65

7.16 3GPP Communication Surveillance IRP Interface Details 65
7.16.1 CSIRP::getHeartbeatPeriod 65
7.16.2 CSIRP::setHeartbeatPeriod 65
7.16.3 CSIRP::notifyHeartbeat 66

7.17 Scheduling Web Services 67

7.18 3GPP Standard Compliance 67

7.19 Trouble Shooting – 3GPP 68

8 MTOSI OSS Integration 71

8.1 Supported Devices for MTOSI Interface 71

8.2 MTOSI Interface and supported APIs 71

8.3 MTOSI API Summary 72

8.4 MTOSI Inventory Management 76

8.5 MTOSI Interface Details 76
8.5.1 Managed Element Retrieval Interface 76
8.5.2 Managed Element Names Retrieval Interface 78
8.5.3 Equipment Inventory Interface 79
8.5.4 Physical TerminationPoint Retrieval Interface 82
8.5.5 Resource Inventory Retrieval Interface 83
8.5.6 Connection Retrieval Interface 84
8.5.7 Flow Domain Retrieval Interface 86

8.6 Ethernet Virtual Circuit 87
8.6.1 Flow Domain Retrieval APIs 88

8.7 DataCenter 89
8.7.1 List of all available data center names 89
8.7.2 List of all available Host name from a particular Data center. 90
8.7.3 Details of a particular host 90
8.7.4 List of available Host cluster Name from a particular Data Center 92
8.7.5 Detail information of a Host cluster 92

8.7.6 List of Data Store Name 93
8.7.7 Detailed information of a particular Data Store. 93
8.7.8 List of available Virtual machine ID 94
8.7.9 Detailed information of a particular data store 95

8.8 L3 MPLS VPN 96
8.8.1 Retrieving list of configured L3 MPLS-VPN names 96
8.8.2 Retrieving details of a VPN 97
8.8.3 Retrieving route details 97

8.9 Floating Termination Point 98
8.9.1 Retrieving details of all available port channels in a device 98

8.10 Gigabit Passive Optical Network 99
8.10.1 List of all available GPON remote unit(ONU) details 100
8.10.2 Physical Termination Point Retrieval Interface 102
8.10.3 List of all supportedPTP of a Remote Unit(ONU) 103
8.10.4 Inventory Notification 107

8.11 Delta Inventory Management 123
8.11.1 Managed Element Names Retrieval Interface details 123

8.12 MTOSI Standard Compliance 125

8.13 Trouble Shooting - MTOSI 125

9 Cisco Specific Interfaces 126

9.1 Cisco Specific Interfaces and supported APIs 126

9.2 Alarm Life Cycle Management 127
9.2.1 AlarmMgmt::Acknowlege 127
9.2.2 AlarmMgmt::De-Acknowlege 128
9.2.3 AlarmMgmt::Clear 130
9.2.4 AlarmMgmt::Retire 131
9.2.5 AlarmMgmt::Add Note 132

9.3 Alarm Retrieval 133
9.3.1 AlarmRetrieval::getsubtendingEvents 134

9.4 Trouble Shooting – Cisco Specific Interfaces 136

10 Appendix I – References to WSDL Documents 137

10.1 3GPP WSDL Documents 137

10.2 3GPP Inventory WSDL 137

10.3 3GPP FT IRP WSDL 137

10.4 3GPP Alarm IRP WSDL 137

10.5 3GPP Notification IRP WSDL 138

10.6 3GPP Notification Consumer WSDL 138

10.7 3GPP CS IRP WSDL 138

10.8 MTOSI WSDL Documents 139

10.9 Managed Element Retrieval WSDL 139

10.10 Managed Element Names Retrieval WSDL 139
10.11 Equipment Inventory Retrieval WSDL 140
10.12 Termination Point Retrieval WSDL 140
10.13 Resource Inventory Retrieval WSDL 140
10.14 Connection Retrieval WSDL 140
10.15 Ethernet Virtual Connection (EVC) Resource Retrieval WSDL 140
10.16 Cisco Specific Extensions WSDL Documents 141
10.17 Alarm Life Cycle Management WSDL 141
10.18 Alarm Retrieval Management WSDL 141
11 Appendix II – 3GPP-Miscellaneous 142
11.1 3GPP inventoryNrm Schema File 142
11.2 3GPP Inventory File 146
11.2.1 3GPP Inventory File Contents 146
11.3 3GPP Detailed Inventory Information 178
11.3.1 Physical Inventory attributes 178
11.3.2 Logical Inventory attributes 182
11.4 3GPP Status File 219
11.4.1 Status File Name 219
11.4.2 Status File Contents 219
11.5 3GPP Notifications 221
11.5.1 File Ready Notification 221
11.5.2 File Preparation Error Notification 222
11.5.3 New Alarm Notification 222
11.5.4 Ack State Changed Notification 224
11.5.5 Cleared Alarm Notification 225
11.5.6 Heartbeat Notification 226
11.6 FTP Configuration 227
11.7 Useful Code Snippets for 3GPP 228
11.7.1 Useful Code Snippets for 3GPP Request Response 228
11.7.2 Useful Code Snippets for 3GPP Notification Consumer 229
11.7.3 Useful Code Snippets for 3GPP Notification Consumer ..... **Error! Bookmark not defined.**
12 References 231

List Of Tables

Table 6-1 Technologies to Facilitate the OSS Integration 14
Table 7-1: Supported Devices for 3GPP and MTOSI 15
Table 7-2: Functional Area Supported by 3GPP 19
Table 7-3: 3GPP Interfaces Names 20
Table 7-4: Input Parameters to Retreive Physical and Logical Inventory Information 22
Table 7-5: input Paramters to Retreive List of Managed Elements 24
Table 7-6: Input Parameters to Retreive Specific Managed Element 25
Table 7-7: Input Paramters to acknowledge a list of Alarms 38
Table 7-8: Input Paramters to unacknowledge a list of Alarms 41
Table 7-9: Input Paramters to add comment to a list of Alarms 44
Table 7-10: Input Paramters to clear a list of Alarms 47
Table 7-11 OSS Integration Problems and Troubleshooting Procedure 68
Table 8-1: Supported Devices for 3GPP and MTOSI 71
Table 8-2: Supported APIs for Managed Elements, Equipment Inventory 72
Table 8-3: APIs for Retreiving EVC 88
Table 8-4: OSS Integration Problems and Troubleshooting Procedure 125
Table 9-1: OSS Integration Problems and Troubleshooting Procedures for Cisco Specific Interfaces 136
Table 11-1: Physical Inventory Attributes for Managed Element 178
Table 11-2: Physical Inventory Attribute for Chassis 179
Table 11-3: Physical Inventory Attribute for Card 179
Table 11-4: Physical Inventory Attribute for Slot 179
Table 11-5: Physical Inventory Attribute for Port 180
Table 11-6: Physical Inventory Attribute for Sub-port 180
Table 11-7: Physical Inventory Attribute for Power 181
Table 11-8: Physical Inventory Attribute for Fan 181
Table 11-9: Logical Attribute for PGW 185
Table 11-10: Logical Attribute for SGW 186
Table 11-11: Logical Attribute for APN 187
Table 11-12: Logical Attribute for SAEGW 190
Table 11-13: Logical Attribute for GGSN 192
Table 11-14: Logical Attribute for ACS 194
Table 11-15: Attribute for AAA Group 202
Table 11-16: Attribute for AAADiameterEndpoint 206
Table 11-17: Attribute for GTPP 208
Table 11-18: Attribute for OperatorPolicy 211
Table 11-19: Logical Attribute for SGSN 212
Table 11-20: Logical Attribute for MME 216

1 Preface

This documentation provides information on the 3GPP and MTOSI OSS Integration. It describes the associated network management of its supported devices. This document is applicable for Prime Central release 2.0 and Prime Network release 5.0.

This preface contains the following sections:

- Conventions
- Additional User Documentation
- Obtaining Documentation, Obtaining Support, and Security Guidelines

2 Conventions

This document uses the following conventions:

Convention	Indication
boldfont	Commands, keywords and user-entered text appear in bold font.
*italic*font	Document titles, new or emphasized terms, and arguments for which you supply values are in *italic* font.
[]	Elements in square brackets are optional.
{x|y|z}	Required alternative keywords are grouped in braces and separated by vertical bars.
[x|y|z]	Optional alternative keywords are grouped in brackets and separated by vertical bars.
String	A non-quoted set of characters.Do not use quotation marks around the string or the string will include the quotation marks.
courierfont	For code snippets and XML
<>	Non-printing characters such as passwords are in angle bracke-ts.
[ ]	Default responses to system prompts are in square brackets.
!,#	An exclamation point(!) or a pound sign(#)at the beginning of a line of code indicates a comment line.

Note Means reader take note. Notes contain helpful suggestions or references to material not covered in the publication.

3 Additional User Documentation

We sometimes update the documentation after original publication. Therefore, we suggest that you also review the latest version of the document from Cisco.com and check for any update.

Other related documents are:

- ASR 5000 Product page
- 3GPP Telecom Management
- MTOSI at TMForum
- Addendum: Prime Network OSS Integration – Sample SOAP Request Response on Cisco Developer Network

4 Obtaining Documentation, Obtaining Support, and Security Guidelines

For information on obtaining documentation, submitting a service request, and gathering additional information, see the monthly What's New in Cisco Product Documentation, which also lists all new and revised Cisco technical documentation, at: *http://www.cisco.com/en/US/docs/general/whatsnew/whatsnew.html*

Subscribe to the What's New in Cisco Product Documentation as a Really Simple Syndication (RSS) feed and set content to be delivered directly to your desktop using a reader application. The RSS feeds are a free service and Cisco currently supports RSS version 2.0.

5 Prime Network Integration Layer

Cisco Prime Network Integration Layer is a management solution which can be installed with Prime Network to provide simple and easy integration with other management systems.

Cisco Prime Network Integration Layer provides standardized web service interfaces for 3GPP (3rd Generation Partnership Project) and MTOSI (Multi Technology Operations Systems Interface) for Prime Network and also allows Prime Network to be seamlessly integrated with Prime Central applications in Cisco Prime for Evolved Programmable Networks deployment. The web services exposed by integration layer can be accessed by authorized SOAP client application to access relevant network data.

To enable Northbound Interface functionality or before using the 3GPP and MTOSI web services, contact your local Cisco account representative.

The Integration Layer can be deployed in two modes:

a. Standalone Mode
b. Suite Mode

5.1 Standalone Mode

In standalone mode, Prime Network Integration layer component is logically deployed on top of the Prime Network but resides as an application on the same box as the EMS. In this mode of deployment, the network and its data which is monitored and controlled by the Prime Network EMS can be accessed by the OSS client in standard (MTOSI or 3GPP) and Cisco defined formats via., a SOAP interface.

The diagram below illustrates the standalone mode of deployment where Integration Layer and the Prime Network EMS reside on the same physical box.

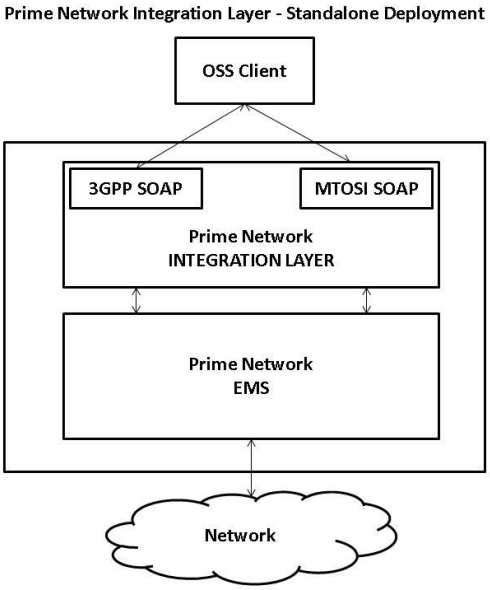

5.2 Suite Mode

The Integration Layer component can also be deployed in a distributed environment. The SOAPWeb Service component will be deployed on the Prime Central box and the individual EMS adaptor components will reside on the system where the Prime Network EMS is deployed.

This mode of deployment enables the management of a larger set of devices with one SOAP component talking to multiple network facing EMS adaptors. The responses from the individual EMS adaptors will be aggregated and presented to the OSS user.

The diagram below illustrates the suite mode of deployment.

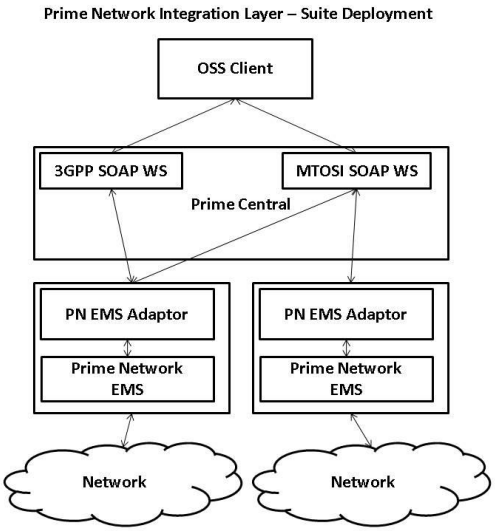

6 Technologies

The NMS / EMS uses SOAP / WSDL to implement the Web Services. This requires the OSS clients to use SOAP understandable clients to communicate and access the interfaces supported. The below table list the technologies used to facilitate the OSS integration.

Table 6-1 Technologies to Facilitate the OSS Integration

Technology	Explanation
ESB	Enterprise Service Bus. The apache Service Mix environment
OSGi	Open Software Gateway Interface, The Karaf environment.
JMS	Java Messaging Service, Queues and topics for communicating across integration layer and prime networks.
SOAP	Simple Object Access Protocol, Used for communicating with the Web Service end point
Web Service	Technology that exposes a SOAP / WSDL for accessing the 3GPP interfaces.

7 3GPP OSS Integration

The 3GPP standard provides APIs to integrate EMS/NMS systems with OSS. The standard supports SOAP/XML, CORBA and CMIP based interface for the OSS to access the EMS / NMS systems. Though the 3GPP standard has provision to support various methods to integrate an EMS/NMS to OSS, the Prime Network provides a SOAP/XML interface to integrate with an OSS.

The 3GPP standard can be extended to support vendor specific attributes. The OSS client applications that integrate with the 3GPP OSS interface can perform network management functions as defined by 3GPP specification called Interface Reference Points (IRP).

This document describes the 3GPP interfaces to support the following IRPs via., SOAP interface:

- Inventory Management IRP
- File Transfer (FT) IRP
- Notification IRP
- Alarm IRP

For a sample SOAP Request and Response for all the APIs defined in these interfaces, refer to the **Prime Network OSS Integration Guide SOAP Request Response** document on Cisco Developer Network.

7.1 Supported Devices for 3GPP Interface

The below table list of supported devices and management layer versions for 3GPP and MTOSI.

Table 7-1: Supported Devices for 3GPP and MTOSI

OSS NBI Interface	Supported DM Versions	Supported Devices
3GPP	PN 4.2.2, 4.2.3, 4.2.3.0.1, 4.3, 4.3.1, 4.3.2, 5.0	ASR5500, ASR5000
	PC 1.5, 1.5.1, 1.5.2, 1.5.3, 2.0	All devices supported by PN 4.2.2, 4 .2.3, 4.2.3.0.1, 4.3, 4.3.1, 4.3.2, 5.0 PC 1.5, 1.5.1, 1.5.2, 1.5.3, 2.0
MTOSI	PN 4.2.2, 4.2.3, 4.2.3.0.1, 4.3, 4.3.1, 4.3.2, 5.0	All Devices supported by PN 4.2.2, 4 .2.3, 4.2.3.0.1, 4.3, 4.3.1, 4.3.2, 5.0

	PC 1.5, 1.5.1, 1.5.2, 1.5.3, 2.0	

7.2 3GPPIntegration Reference Point (IRP)

The Integration Reference Point (IRP) defines a standard way for the OSS client (IRP Manager) to refer and access the EMS / NMS (IRP Agents).

The 3GPP Integration Layer will support an IRP Agent that provides support for the InventoryIRP, File Transfer IRP and Notification IRP. The Inventory IRP is a complete Cisco extension. The File Transfer IRP and Notification IRP has a restricted support in this release. This section includes the details on:

- 3GPP Interfaces and supported APIs
- Overview of 3GPP Inventory Management
- 3GPP Inventory IRP InterfaceDetails
- Overview of 3GPP File Transfer IRP
- 3GPP File Transfer IRP Interface Details

7.3 3GPP Interfaces and supported APIs

This section lists the summary of the Interfaces and the associated APIs supported by 3GPP

Sl.No	Interface Name	IRP Version	API Name	3GPP Standard	Cisco Extenson
1	**InventoryIRP**	**v10.3.0**	**getAllInventory**		**Y**
2			**getManagedElement**		**Y**
3			**getAllManagedElementNames**		**Y**
4			**getStatus**		**Y**
5			**getActiveOperations**		**Y**
6	**FileTransferIRP**	v10.0.0	listAvailableFiles	**Y**	
7	**AlarmIRP**	**v11.1.0**	**getAlarmList**	**Y**	
8			**AcknowlegeAlarm**	**Y**	
9			**UnAcknowledgeAlarm**	**Y**	
10			**setComment**	**Y**	
11			**clearAlarms**	**Y**	
12			**notifyNewAlarm**	**Y (Only in Suite Mode)**	**Y**

13			**notifyAckStateChanged**	**Y (Only in Suite Mode)**	**Y**
14			**notifyClearedAlarm**	**Y (Only in Suite Mode)**	**Y**
15			**notifyUpdateAlarm**	**N (Custom API, Suite Mode)**	
16			**notifyChangedAlarm**	**Y (Only in Suite Mode)**	**Y**
17	**NotificationProducer**	**v9.2.0**	**Subscribe**	**Y**	
18			**Unsubscribe**	**Y**	

7.4 3GPP APIs Support for Prime Central and Prime Network

This section lists the supported 3GPP APIs for Prime Central and Prime Network.

API Name	Supported in Prime Central	Supported in Prime Network
AlarmIRP::GetAlarmList	Y	Y
AlarmIRP::acknowledgeAlarms	Y	Y
AlarmIRP::unacknowledgeAlarms	Y	Y
AlarmIRP::SetComment	Y	Y
AlarmIRP::clearAlarms	Y	Y
AlarmIRP::notifyNewAlarm	Y	N
AlarmIRP::notifyAckStateChanged	Y	N
AlarmIRP::notifyClearedAlarm	Y	N
AlarmIRP::notifyUpdateAlarm	Y	N
AlarmIRP::notifyChangedAlarm	Y	N
AlarmIRP::getNotificationCategories	Y	N
CSIRP::getHeartbeatPeriod	Y	Y

CSIRP::notifyHeartbeat	Y	N

7.5 Overview of 3GPP Inventory Management

Inventory Management SOAP interface is a vendor extension Web Service used to retrieve the physical and logical inventory data for ASR 5000 and ASR5500 devices manufactured by Cisco. The Inventory management Web Service provides three interfaces to retrieve physical and logical inventory data from the devices.The Interfaces are described in detail in this document under the 3GPP OSS Integration section.

The below table gives a list of functional areas supported along with the management data type.

Table 7-2: Functional Area Supported by 3GPP

Functional Area	Management Data Type	Description
Inventory Management	IM	This functional area covers the inventory management needs of the OSS. The IRP Agents implement interfaces that enables the IRP Managers (OSS clients) to collect inventory data from IRP Agents (EMS / NMS)

7.5.1 Physical Inventory

Inventory Management includes information on following physical inventory data.

- Managed element
- Chassis
- Card
- Slot
- Port
- Sub-port
- Power unit
- Fan

The attributes of the physical inventory units can be found in the Appendix section.

7.5.2 Logical Inventory

Inventory Management also captures information on following logical entities:

- PGW
- SGW
- SAEGW
- APN
- GGSN
- ACS (Active Charging Service)
- AAA

- GTPP
- Operator Policy
- SGSN
- MME

Logical entities have both 3GPP prescribed data and Cisco specific vendor extensions. The attributes details are available in the Appendix section.

7.5.2.1 *Logical Inventory (Prime Central)*

The following Inventory Management mobility services are applicable only for Prime Central:

- PGW
- SGW
- SAE-GW
- GGSN
- SGSN
- MME
- HENB
- HNBGW
- SEGW

7.6 3GPP Inventory IRP InterfaceDetails

This section gives a description of all interfaces with their input, output and the description in detail. An OSS user can go through this section to better understand the interface and to use it according to their business needs.

The WSDL document describing the details of the Interface can be accessed from the Appendix section.

Table 7-3: 3GPP Interfaces Names

Sl.No	Interface Name	Description
1	getAllInventory	This API is used to retrieve Inventory data for all supported devices under the management domain
2	getAllManagedElementNames	This API is used to retrieve the managed element name and types for all managed elements present in the management domain.
3	getManagedElement	This API is used to retrieve the inventory data for a specific Managed Element.
4	getStatus	This API is used to get the status of the following inventory retrieval operations, a. getAllInventory b. getManagedElement

5	getActiveOperations	This API provides information about currently running inventory retrieval operations. Information about the following operations will be provided along with the associated devices as applicable. a. getAllInventory b. getManagedElement

7.6.1 InventoryIRP:: getAllInventory

This interface is invoked by the OSS client to retrieve the physical and logical inventory information for the managed elements present under the management domain.
The below table gives the list of parameters that should be used as input to retrieve physical and logical inventory information.

Description:
This interface will be used to generate inventory files according to 3GPP format. The inventory data will contain both physical and logical inventory information. Physical inventory will contain information about the hardware details and the logical inventory has information about the following types of services running on the devices.

- PGateway
- SGateway
- SAEGW
- GGSN
- APN Profile
- ACS (Active Charging Service)
- AAA
- GTPP
- Operator Policy
- SGSN
- MME

The inventory data will be stored in XML files under preconfigured directories. Details about this configuration will be captured under the FTP Configuration section in this document. The inventory collection status will be indicated with a status file present under the output directory. The **status** file will contain the information about the managed elements, the device type, its status and the inventory file location.

If FTP/SFTP servers are configured, the inventory data file will be moved to the respective machines depending on the availability of the primary and secondary FTP servers. If both the FTP and SFTP servers are not reachable, the inventory data files will be written to the local machine.
A copy of the status file will be available under the “INSTALL_DIR/sildata” directory on the host where the Integration Layer is installed. The detail of the status file is explained in this document under the Appendix section

Table 7-4: Input Parameters to Retreive Physical and Logical Inventory Information

Sl.No	Parameter	Data Type	Description
1	InvokeIdentifierIn	String	This is an optional parameter passed by the OSS client user. The invoke Identifier value passed as input to this interface will be returned (InvokeIdentifierOut) by the Web Services Interface. The invoke Identifier can be used by the OSS client for correlation purpose. The value passed to this is not validated and is returned to the user as is.
2	queryXpathExp	String	An XPath query string containing the Management Domain. The value expected is "/MD=CISCO_PRIME". The Interface will return an "IllegalArgument" Exception if this parameter is not specified or any value other than "/MD=CISCO_PRIME" is specified.

Output:

The output will be in three parts:

1. A regular SOAP response to the Web Service request which will contain the invoke identifier passed originally in the input and a response string indicating that the Inventory request is initiated with a request ID.
2. One or more inventory XML files containing the physical and logical inventory data for the supported devices in the domain. The request ID will be part of the Inventory file name that is generated. The user can use the request ID to retrieve the inventory files generated for a given request.
3. A Status file to indicate the status (IN-PROGRESS, COMPLETED, FAILED) for an inventory request. The Status file has the request ID as part of its name.

Error:

Any error that happens during the inventory file generation process will be notified to the caller via., a Inventory File Preparation Error. In addition to this the following SOAP responses will be returned for the Error conditions described below.

Sl.No	Error Condition	Error Response
1	Unable to reach the EMS system	SOAP response indicating "No DMs available" will be returned.
2	No Managed Elements exist in the network	SOAP response indicating "No Managed Elements

		exist in the network " will be returned.

NOTE:

1. There will be one Inventory XML file per supported managed element. For a list of supported network equipments, please refer to the section Supported Devices for 3GPP Interface.
2. The 3GPP Inventory XML conforms to the XML schema "InventoryNrm.xsd".
3. The XML Shema "inventoryNrm.xsd" is the NRM-specific shema for the Inventory Management NRM IRP IS alternateive 1 defined in 3GPP TS 32.692.

7.6.1.1 *InventoryIRP:: getAllInventory Multi DM behaviour*

This section explains the API behavior in multi-DM environment. The following responses will be returned to the user under the specified conditions

Sl.No	Condition	Behavior
1	When All associated Domain Managers (DMs) are free to take the request	The request to collect inventory will be initiated to all DMs and the response indicating that the request is intiated will be sent with a request ID.
2	When atleast one of the associated DMs is processing a previous inventory request	The request will not be intiated. A reponse indicating that another request is in progress will be sent to the user.

7.6.2 InventoryIRP:: getAllManagedElementNames

This interface is used to get a list of managed element names supported under the "CISCO_PRIME" management domain[1]. The interface returns a list of managed element names and their device family / device type.

Description:

This interface will be used to retrieve a list of managed elements for the given management domain. The response will contain the managed element name and the device family.
The response of this interface can at a later point be used by the OSS client to selectively issue request to collect inventory for specific nodes using the "getManagedElement" interface.
The below table gives the list of parameters that should be used as input to retrieve physical and logical inventory information.

Input:

[1]In Prime Network 4.0, this interface will only return the name of devices that are managed by Prime Network.

Table 7-5: input Paramters to Retreive List of Managed Elements

Sl.No	Parameter	Data Type	Description
1	InvokeIdentifierIn	String	This is an optional parameter passed by the OSS client user. The invoke Identifier value passed as input to this interface will be returned (InvokeIdentifierOut) by the Web Services Interface. The invoke Identifier can be used by the OSS client for correlation purpose. The value passed to this is not validated and is returned to the user as is.
2	queryXpathExp	String	An XPath query string containing the Management Domain. The value expected is "/MD=CISCO_PRIME". The Interface will return an "IllegalArgument" Exception if this parameter is not specified or any value other than "/MD=CISCO_PRIME" is specified.

Output:

The output for this method will be a SOAP response with a list of managed element names and their device family types.

Error:

Any error that happens during the inventory file generation process will be notified to the caller via., a Inventory File Preparation Error. In addition to this_SOAP responses will indicate the error conditions as described below.

Sl.No	Error Conditon	Error Response
1	Unable to reach the EMS system	SOAP response indicating "No DMs available" will be returned.
2	No Managed Elements	SOAP response indicating "No Managed Elements are found " will be returned.

7.6.2.1 *InventoryIRP:: getAllManagedElementNames Multi DM behavior*

This section describes the API behavior in a multiDM environment.

The Request for retrieving all ManagedElement Names will be sent to all participating DMs. The response from each of the DM will be aggregated and the information will be sent to the requesting user.

7.6.3 InventoryIRP:: getManagedElement

This interface is used to get inventory data for a specific managed element. The inventory data will be stored in XML files on the configured FTP / SFTP server or on the local machine.

Description:

The inventory data will be stored in an XML file. The XML file will contain both physical and logical inventory data according to 3GPP format. The file will be stored under the configured storage location.

If file transfer is enabled and both the primary and secondary destinations are not accessible, the XML file will be generated on the local machine under preconfigured folder.

Input:

The below table gives the list of parameters that should be used as input to retrieve physical and logical inventory information.

Table 7-6: Input Parameters to Retreive Specific Managed Element

Sl.No	Parameter	Data Type	Description
1	InvokeIdentifier	String	This is an optional parameter passed by the OSS client user. The invoke Identifier value passed as input to this interface will be returned (InvokeIdentifierOut) by the Web Services Interface. The invoke Identifier can be used by the OSS client for correlation purpose. The value passed to this is not validated and is returned to the user as is.
2	queryXpathExp	String	An XPath query string containing the Management Domain. The value expected is "/MD=CISCO_PRIME/ME=<ME Name>[2]". The Interface will return an Exception if: The management domain is NOT CISCO_PRIME. The managed element is NOT specified OR managed.

Output:

The output will be in three parts:

[2]The Managed Element name should be identical with that of Prime Network Administration GUI

1. A regular SOAP response to the Web Service request which will contain the invoke identifier passed originally in the input and a response string indicating that the Inventory request is initiated with a request ID.
2. Inventory XML file containing the physical and logical inventory data for the specified managed element. The request ID will be part of the Inventory file name that is generated. The user can use the request ID to retrieve the inventory file generated for a given request.
3. A Status file to indicate the status (IN-PROGRESS, COMPLETED, FAILED) for an inventory request. The Status file has the request ID as part of its name.

Error:

The following Errors will be reported.

Sl.No	Error Condition	Error Response
1	Unable to read the DMs	SOAP reponse indicating "NO DMs available" will be reported.
2	Managed Element does not exist	SOAP reponse indicating "Managed Element does not exist" will be returned.

NOTE:

1. The 3GPP Inventory XML conforms to the XML schema "InventoryNrm.xsd".
2. The XML Shema "inventoryNrm.xsd" is the NRM-specific shema for the Inventory Management NRM IRP IS alternateive 1 defined in 3GPP TS 32.692.

7.6.3.1 *InventoryIRP:: getManagedElement Multi DM behaviour*

This APIs behavior in a Multi DM environment is given below

Sl.No	Condition	Behavior
1	When all associated Domain Managers (DMs) are free to take the request	The request to collect inventory will be initiated to all DMs and the response indicating that the request is intiated will be sent with a request ID.
2	When atleast one of the associated DMs is processing a previous inventory request	The request will not be intiated. A reponse indicating that another request is in progress will be sent to the user.

7.6.4 InventoryIRP:: getStatus

This interface is used to get the status of the inventory operations i.e., getManagedElement & getAllInventory.

Description:

3GPP inventory operations like getManagedElement and getAllInventory operations usually take longer time for inventory collection and to generate the output XML containing physical and logical inventory. At any point in time, if the user want to know the current status of the inventory operations, one can issue the getStatus with requestID as the input.

Input:

The below table gives the list of parameters that should be used as input to retrieve the status of inventory operation.

Sl.No	Parameter	Data Type	Description
1	requestID	String	This is a mandatory parameter that is generated during getAllInventory or getManagedElement operation.

Output:

The output for this method will be a SOAP response which contains the status of the inventory IRP as IN_PROGRESS, SUCCESS, FAILED, and REQUEST_ID_NOT_FOUND.

Error:

The following errors will be reported.

Sl.No	Error Condition	Error Response
1	REQUEST_ID_NOT_FOUND	SOAP reponse indicates that specified input requestID was not found.

7.6.5 InventoryIRP:: getActiveOperations

Description:

This API is used to get the list of currently running 3GPP inventory operations. Information about the following operations can be queried:

a. getManagedElement and
b. getAllInventory

The information provided as output of this API can be used by an OSS to plan and schedule an inventory collection routine by avoiding duplicate collection effort.

Input:

The below table gives the list of parameters that should be used as input to retrieve the active inventory operations.

Sl.No	Parameter	Data Type	Description
1	operationName	String	This is a non- mandatory parameter . This will specify the inventory operation name i.e., getAllInventory & getManagedElement.
2	queryXpathExp	String	This is a non-mandatory parameter. An XPath query string containing the Management Domain. The value expected is "/MD=CISCO_PRIME/ME=<ME Name> ".

Output:

The output of this method will be the list of active inventory operations like getAllInventory & getManagedElement for the particular device in the system.

Error:

The following errors will be reported.

Sl.No	Error Condition	Error Response
1	OPERATION_NOT_RUNNING	SOAP reponse indicates that currently no inventory operation is running in the system.
2	OPERATION_NOT_SUPPORTED	SOAP reponse indicates that specified operation is not supported by this operation. Supported operations are getAllInventory & getManagedElement.

7.7 Overview of 3GPP File Transfer IRP

The 3GPP interface for File Transfer IRP provides APIs to retrieve file information. The API allows user to list files that are generated as an output of Inventory IRPs "getAllInventory" and "getManagedElement" WS request. The File Transfer IRP also adds support for generating a

FileReady and File Preparation Error Notification. The details of which will be discussed in the Notification section of this document.

The FT IRP support the following file transfer protocols:

- SFTP
- FTP

7.8 3GPP File Transfer IRP Interface Details

This section describes the 3GPP File Transfer IRP Interface in details. The operations supported in File Transfer IRP, input, output and functionality will be explained.

The WSDL document describing details of the interface can be accessed from the Appendix section.

7.8.1 File Transfer IRP::listAvailableFiles

The API details with the input, output and their data types with the description is given below.

Description:

The API will be used to list all available files that were generated by the “getAllInventory” or “getManagedElement” call from the Inventory IRP agent.Input :

Sl.No	Parameter	Data Type	Description
1	managementDataType	String	This is a mandatory paramenter, should be provided by the OSS user. It specifies the type of the management data stored in the file. Different management data types are PM, CM, IM, TE, CT, NL, CG, OT,BASE. Currently we are supporting only IM – Inventory Management.
2	beginTime	DateTime	This is an optional parameter and is expressed in UTC time. Format : YYYY-MM-DDThh:mm:ss If user specifies in

			YYYY-MM-DDThh:mm:ss:mmm+/-TZ format, millisecond & timezone part will be ignored. This parameter specifies list of available files whose ready time are later or equal to this time. Note : OSS user has to provide the date time w.r.t management domain timezone.
3	endTime	DateTime	This is an optional parameter and is expressed in UTC time. Format : YYYY-MM-DDThh:mm:ss If user specifies in YYYY-MM-DDThh:mm:ss:mmm+/-TZ format, millisecond & timezone part will be ignored. This parameter specifies list of available files whose ready time are earlier than this time.

NOTE:

- Output will list a unique set of files from both primary and seconday
- OSS user has to provide the input date time for beginTime and endTime with respect to management domain timezone.

Output:

This API will list the set of available files from the configured local, primary and secondary FTP servers

Output paraments

Sl.No	Parameter	Data Type	Description
1	fileInfoList	fileInfo	This specifies the list of files' information retrieved between the provided beginTime and endTime by the OSS user.
2	Status	String	This parameter specifies the status of the operation. Possible values are OperationSucceeded and OperationFailed.

Output paraments – FileInfo object

Sl.No	Parameter	Data Type	Description
1	managementDataType	String	It specifies the type of the management data stored in the file which is provided by the OSS user in request. Different management data types are PM, CM, IM, TE, CT, NL, CG, OT,BASE. Currently we are supporting only IM – Inventory Management.
2	fileLocation	String	This specifies the complete path of the IM file located on the disk along with filename. Format : IP:/<full path>_<filename>
3	fileSize	Long	It identifies the size of the file in bytes.
4	fileReadyTime	DateTime	It identifies the date and time when the file was created.
5	fileExpirationTime	DateTime	It identifies the date and time beyond which the file may be deleted.
6	fileCompression	String	It identifies the name of the compression algorithm used for the file. Currently this will be empty as we are not supporting this.
7	fileFormat	String	It identifies the encodeing technique used by the file. Currently we support XML-schema.

Error:

The following error scenarios will be handled and reported by the API:

Sl.No	Condition	Error
1.	No files are available	If no files present in the specified duration, FileInfoList in soap response will be empty with status “OperationSucceeded”.
2	Empty begin time or endTime	The response should contain an error message saying “Please enter beginTime in standard UTC format YYYY-MM-DDThh:mm:ss”
3	Invalid Management Datatype	The response will have an error message “Invalid management data type”.
4	Invalid endTime (EndTime > BeginTime)	The response should contain an errror "Endtime greater than beginTime".
5	No beginTime & endTime	The response will list all the files present the directory

6	No endTime input	The response should list all the available files in the directory whose time of creation lies between user provided beginTime and current system time (as endTime is not mentioned by user).
7	No input beginTime	The response will list all the available files which are created before the specified endTime.
8	Non UTC format of begin or endTime	The response will contain an error “Please provide the begin time in standard UTC format : YYYY-MM-DDThh:mm:ss.”.
9	Large volume of files, potential timeout candidate	The response willl list all the available files for the duration provided from the primary and secondary directory. In case of huge data, an error will be shown like “Could not list the contents of folder, <path>”
10	Timeout due to FTP server un-reachable.	The response willl list all the available files for the duration provided from the primary and secondary directory. In case of connection timeout from both the servers, an error will be shown like “Both Primary and Secondary are Not reachable”
11	Replication enabled between FTP servers but directory paths are incorrect.	The response will list all the available files for the duration provided from the primary and secondary directory. In case directory paths are not properly mentioned, error will be shown like “Could not list the contents of <path>.”

7.8.1.1 *ListAvailableFiles Multi DM Environment:*

Description :

ListAvailable files operation in multi DM environment will be aggregated output of result from each DM.

Input :

ListAvailable files operation input for multi DM environment is same as input in standalone environment.

Output:

ListAvailable files operation output in multi DM environment will be aggregated output from each DM.

Sl.No	Condition	Error
1	Exception occurred in DM1 or DM2	If any exception happens in DM1 but the same operation is successful in DM2, the the final result will be from DM2

Error :

The error conditions in standalone are applicable for multi DM environment as well.

7.9 Overview of 3GPP Alarm IRP

The 3GPP interface for Alarm Integration Reference Point provides APIs to retrieve the List of Tickets and to change the Life Cycle State of one or more Tickets in the Prime Network.

7.10 3GPP Alarm IRP Interface Details

This section describes the 3GPP Alarm IRP Interface in details. The operations supported in Alarm IRP, input, output and functionality will be explained.

The WSDL document describing the details of the Interface can be accessed from the Appendix section.

7.10.1 AlarmIRP::GetAlarmList

Description:

This API is used to retrieve the list of Tickets in the Prime Network and from RMS, BAC-TW, CPAR, CPNR, and PC alarms.

Input:

Sl.No	Parameter	Data Type	Description
1	alarmAckState	ENUM (ALL_ALARMS, ALL_ACTIVE_ALARMS, ALL_ACTIVE_AND_ACKNOWLEDGED_ALARMS,	It carries a constraint. It retrieves the alarms in the AlarmList based on the alarmAckState. If no alarmAckState is provided in the request, it fetches all the active alarms.This is optional parameter.

		ALL_ACTIVE_AND_UNACKNOWLEDGED_ALARMS, ALL_CLEARED_AND_UNACKNOWLEDGED_ALARMS, ALL_UNACKNOWLEDGED_ALARMS)	
2	filter	String Input format <T1|T2> T1|T2 format: y-M-d'T'H:m:s z Where: y-year (2015); M-Month (08) ;d-date (09) H-hours (20) [24 hours format] m-Minutes(09) s-seconds(10) z-timezone (GMT+5:30) Ex: 2015-05-07T15:41:14 GMT+05:30|2015-05-07T16:41:36 GMT+05:30	It carries a constraint on the duration of alarms. It fetches the alarms occurred between the time interval T1 and T2. Filter and alarmAckState can apply together to retrieve alarms based on the constraints. If no filter is provided it will fetch the alarms depending upon alarmAckState enum. If both alarmAckState and filter are not provided, then it fetches all the active alarms. Both timestamps T1 and T2 are inclusive.This is optional parameter.

Output:

This API will give a list of AlarmInformation instances.

Sl.No	Parameter	Data Type	Description
1	alarmInformationList	List	It carries the AlarmInformation instances. For parameters contained in each AlarmInformation instance see the table below.
2	Status	ENUM (OperationSucceeded, OperationFailed)	If all the Tickets are returned, status=OperationSucceeded. If there is any failure in retrieving the AlarmInformationList, status = OperationFailed.

Output parameters: AlarmInformation instance (Standalone mode)

Sl.No	Parameter	Data Type	Description

1.	alarmId	String	It identifier which uniquely identifies a Ticket in the Prime Network.
2	objectClass	String	The Object Identifier which identifies the device/component in the Prime Network.
3	objectInstance	String	The Object Identifier which identifies the device/component in the Prime Network.
4	alarmRaisedTime	XMLGregorianCalendar	The time when the Ticket is raised. Shall be of best effort basis.
5	alarmChangedTime	XMLGregorianCalendar	The latest time when the severity of the Ticket is changed. Shall be of best effort basis.
6	probableCause	String	A short phrase denoting the cause of the Ticket
7	ackState	ENUM	Possible values: Acknowledged or Unacknowledged Denotes the acknowledegment status.
8	alarmType	ENUM	Indicates the type of the Ticket Possible values: “Communications Alarm", "Processing Error Alarm", "Environmental Alarm". "Quality Of Service Alarm" or "Equipment Alarm"
9	perceivedSeverity	ENUM	Indicates the Ticket’s severity level. Possible values: Critical, Major, Minor, Warning, Intermediate, Cleared
10	ackUserId	String	The ID of the user who has performed the Acknowledge operation. If the operation is perfomed by User1 on behalf of User2, user will see - “User1” as “User2”.
11	ackTime	XMLGregorianCalendar	The time when the Ticket is acknowledged.
12	clearUserId	String	The ID of the user who has performed the Clear operation. If the operation is perfomed by User1 on behalf of User2, user will see - “User1” as “User2”.
13	alarmClearedTime	XMLGregorianCalendar	The time when the Ticket is cleared.

Output parameters: AlarmInformation instance (Suite Mode)

Sl.No	Parameter	Data Type	Description

1.	alarmId	String	The identifier which uniquely identifies a Ticket in the Prime Central Fault Management
2	notificationId	Long	Identifies the notification which is a sequential number that uniquely identifies the Alarm information
3	systemDN	String	Indicates the instance of the IRP Agent
4	objectClass	String	The Object Identifier which identifies the device/component in the Prime Network.
5	objectInstance	String	The Object Identifier which identifies the device/component instance in the Prime Network.
6	alarmType	ENUM	Indicates the type of the Ticket Possible values: “Communications Alarm", "Processing Error Alarm", "Environmental Alarm". "Quality Of Service Alarm" or "Equipment Alarm"
7	probableCause	String	Not Supported. Probable Cause information will be available in Troubleshooting field of additionalInformation parameter
8	perceivedSeverity	ENUM	Indicates the Ticket’s severity level. Possible values: Critical, Major, Minor, Warning, Intermediate, Cleared
9	specificProblem	String	Describes specific problem associated with the ticket.
10	additionalText	String	Description of the Ticket.
11	additionalInformation	List	Additional information related to the ticket. Contains the following fields: Identifier, AlarmCategory,AlarmServerAddress,AlertGroup, AlarmManagedObjectAddress,AlertId, OriginalTrapName,Details, Troubleshooting, Port description. **Note**: Port description shall be available only for tickets from Prime Network.
12	ackTime	XMLGregorianCalendar	The time when the Ticket is acknowledged.
13	ackUserId	String	The ID of the user who has performed the Acknowledge operation. If the operation is perfomed by User1 on behalf of User2, user will see - “User1” as “User2”.
14	ackState	ENUM	Possible values: Acknowledged or Unacknowledged Denotes the acknowledegment status.

15	eventTime	XMLGregorianCalendar	The time when the Ticket is raised. Shall be of best effort basis.

Note:

- In case of a standalone deployment, the active Tickets from the Prime Network are retrieved.
- In case of standalone deployment, Prime Network doesn't archive a cleared Ticket for an hour. So cleared alarms till an hour, will be retrieved by the API.
- In case of a suite deployment, the active Tickets from the integrated Prime Networks, PPM TCA'S through Prime Network, tickets from RMS, BAC-TW, CPAR, CPNR, and PC alarms will be retrieved through the Fault Management Component.
- probableCause is not compliant to X733 Standards for PN tickets.

Error:

The following error scenarios will be handled and reported by the API:

Sl.No	Condition	Error
1	Prime Fault management component is down.	SOAP Fault saying that "Could not send Message." will be returned.

7.10.2 Alarm IRP::acknowledgeAlarms

Description:

The API will be used to acknowledge one or more Tickets in the Prime Network.

Input:

Table 7-7: Input Paramters to acknowledge a list of Alarms

Sl.No	Parameter	Data Type	Description
1	alarmInformationAndSeverity ReferenceList	List	List of AlarmInformation.alarmId(corresponds to ID of a Ticket in Prime Network) - It carries one or more identifiers identifying AlarmInformation instances in AlarmList, including optionally the perceivedSeverity of the AlarmInformation instance that is going to be acknowledged.
2	ackUserId	String	The ID of the user who wishes to acknowledge the alarms

Output:

The API gives the information about the status of the acknowledge operation and the information about the Tickets that are not acknowledged.

Sl.No	Parameter	Data Type	Description
1	badAlarmInformation ReferenceList	List	List of pair of AlarmInformation.alarmId(same as the input), ENUM (UnknownAlarmId, AcknowledgmentFailed, WrongPerceivedSeverity) and additional failure reason - If all the Tickets are acknowledged, this information is absent. Else this list contains details about the Tickets that are not acknowledged along with the failure reason and additional failure reason for each Ticket.

2	Status	ENUM(OperationSucceeded, OperationFailed, OperationPartiallySucceeded)	If some of the Tickets are acknowledged, status = OperationPartiallySucceeded. If all the Tickets are acknowledged, status = OperationSucceeded. If none of the Tickets are acknowledged, status=OperationFailed.

Error:

The following error scenarios will be handled and reported by the API:

Sl.No	Condition	Error
1	Alarm Id(In this case the Ticket ID in Prime Network) is not present in Prime Network (Standalone deployment)	The badAlarmInformationReferenceList will contain the corresponding AlarmId along with the failureReason - "AcknowledgmentFailed" and additionalFailureReason - "Execution failed. Ticket is in use or does not exist." The overall status of the operation will be "OperationFailed" if the operation did not succeed for all the remaining Tickets or otherwise “OperationPartiallySucceeded” if the operation succeeded for some of the Tickets.
2	Alarm Id(In this case the Ticket ID in Prime Network) provided is neither an Integer nor in the format – {[NewAlarm(Id=<Ticket ID>)]} (Standalone deployment).	The badAlarmInformationReferenceList will contain the corresponding Ticket ID along with the failureReason - " UnknownAlarmId " and additionalFailureReason - “Invalid Alarm Id provided. Please enter a valid Alarm Id.” The overall status of the operation will be "OperationFailed" if the operation did not succeed for all the remaining Tickets or otherwise “OperationPartiallySucceeded” if the operation succeeded for some of the Tickets.
3	Alarm Id(the Ticket ID in Prime Network) is not present in Prime Fault Management (Suite deployment)	The badAlarmInformationReferenceList will contain the corresponding AlarmId along with the failureReason - “UnknownAlarmId” and additionalFailureReason - "Alarm does not exist." The overall status of the operation will be "OperationFailed" if the operation did not

		succeed for all the remaining Tickets or otherwise “OperationPartiallySucceeded” if the operation succeeded for some of the Tickets.
4	Alarm Id(In this case the Ticket ID in Prime Network)provided is not an Integer (Suite deployment).	The badAlarmInformationReferenceList will contain the corresponding AlarmId along with the failureReason - " UnknownAlarmId " and additionalFailureReason - “Unable to look up Alarm Id. Error occured while looking up the Alarm Id.” The overall status of the operation will be "OperationFailed" if the operation did not succeed for all the remaining Tickets or otherwise “OperationPartiallySucceeded” if the operation succeeded for some of the Tickets.
5	Alarm operation succeeded but FM updating failed for an Alarm Id(In this case the Ticket ID in Prime Network) (Suite deployment).	The badAlarmInformationReferenceList will contain the corresponding AlarmId along with the failureReason - "AcknowledgmentFailed" and additionalFailureReason - “Alarm operation succeeded on DM. But failed to update FM." The overall status of the operation will be “OperationPartiallySucceeded” if the operation did not succeed for all/some of the remaining Ticket. FM update failure after the operation succeeded on the DM is considered as partial success.
6	Alarm Id(In this case the Ticket ID in Prime Network) provided is empty.	The badAlarmInformationReferenceList will contain the corresponding AlarmId along with the failureReason - " UnknownAlarmId " and additionalFailureReason - “Id provided is invalid. Id cannot be null or empty.” The overall status of the operation will be "OperationFailed" if the operation did not succeed for all the remaining Tickets or otherwise “OperationPartiallySucceeded” if the operation succeeded for some of the Tickets.
7	DM down	The badAlarmInformationReferenceList will contain the corresponding AlarmId along with the failureReason – “AcknowledgmentFailed” and additionalFailureReason – “DM (<DM ID>) not found.”

		The overall status of the operation will be "OperationFailed" if the operation did not succeed for all the remaining Alarms or otherwise "OperationPartiallySucceeded" if the operation succeeded for some of the Alarms.
8	List don't have even a single Alarm Id (Empty list)	SOAP Fault with message – "Invalid Request. At least one Alarm Id is required."
9	User (ackUserId) is not present	SOAP Fault with message – "Invalid User Id. User Id cannot be null or empty."
10	Alarm Ids in the request exceeded the limit specified in the com.cisco.prime.esb.tgpp.interface.cfg file.	SOAP Fault with message – "Number of alarms in request (<No. of Alarm Ids in request>) exceeded the maximum limit set (<bulkAlarmOpMaxLimit value in cfg. File>)"

7.10.3 AlarmIRP::unacknowledgeAlarms

Description:

The API will be used to unacknowledge one or more Tickets in the Prime Network.

Input:

Table 7-8: Input Paramters to unacknowledge a list of Alarms

Sl.No	Parameter	Data Type	Description
1	alarmInformationReferenceList	List	List of AlarmInformation.alarmId(corresponds to ID of a Ticket in Prime Network) - It carries one or more identifiers identifying AlarmInformation in AlarmList.
2	ackUserId	String	The ID of the user who wishes to unacknowledge the alarms

Output:

The API gives the information about the status of the unacknowledge operation and the information about the Alarms that are not unacknowledged.

Sl.No	Parameter	Data Type	Description
1	badAlarmInformation ReferenceList	List	List of pair of AlarmInformation.alarmId(same

			as the input) and the failure reason - If all the Tickets are unacknowledged, this information is absent. Else this list contains details about the Tickets that are not unacknowledged along with the failure reason for each.
2	Status	ENUM(OperationSucceeded, OperationFailed, OperationPartiallySucceeded)	If some of the Tickets are unacknowledged, status = OperationPartiallySucceeded. If all the Tickets are unacknowledged, status = OperationSucceeded. If none of the Tickets are unacknowledged, status=OperationFailed.

Error:

The following error scenarios will be handled and reported by the API:

Sl.No	Condition	Error
1	Alarm Id(In this case the Ticket ID in Prime Network) is not present in Prime Network (Standalone deployment)	The badAlarmInformationReferenceList will contain the corresponding AlarmId along with the failureReason - "Execution failed. Ticket is in use or does not exist." The overall status of the operation will be "OperationFailed" if the operation did not succeed for all the remaining Tickets or otherwise “OperationPartiallySucceeded” if the operation succeeded for some of the Tickets.
2	Alarm Id(In this case the Ticket ID in Prime Network) provided is neither an Integer nor in the format – {[NewAlarm(Id=<Ticket ID>)]} (Standalone deployment).	The badAlarmInformationReferenceList will contain the corresponding AlarmId along with the failureReason - " Invalid Alarm Id provided. Please enter a valid Alarm Id.” The overall status of the operation will be "OperationFailed" if the operation did not succeed for all the remaining Tickets or otherwise “OperationPartiallySucceeded” if the operation succeeded for some of the Alarms.

3	Alarm Id(In this case the Ticket ID in Prime Network) is not present in Prime Fault Management (Suite deployment)	The badAlarmInformationReferenceList will contain the corresponding AlarmId along with the failureReason - “UnknownAlarmId” and additionalFailureReason - "Alarm does not exist." The overall status of the operation will be "OperationFailed" if the operation did not succeed for all the remaining Tickets or otherwise “OperationPartiallySucceeded” if the operation succeeded for some of the Tickets.
4	Alarm Id(In this case the Ticket ID in Prime Network) provided is not an Integer (Suite deployment).	The badAlarmInformationReferenceList will contain the corresponding AlarmId along with the failureReason - " UnknownAlarmId " and additionalFailureReason - “Unable to look up Alarm Id. Error occured while looking up the Alarm Id.” The overall status of the operation will be "OperationFailed" if the operation did not succeed for all the remaining Tickets or otherwise “OperationPartiallySucceeded” if the operation succeeded for some of the Tickets.
5	Alarm operation succeeded but FM updating failed for an Alarm Id(In this case the Ticket ID in Prime Network) (Suite deployment).	The badAlarmInformationReferenceList will contain the corresponding AlarmId along with the failureReason - "AcknowledgmentFailed" and additionalFailureReason - “Alarm operation succeeded on DM. But failed to update FM/ But no response received for FM update operation." The overall status of the operation will be “OperationPartiallySucceeded” if the operation did not succeed for all/some of the remaining Tickets. FM update failure after the operation succeeded on the DM is considered as partial success.
6	Alarm Id(In this case the Ticket ID in Prime Network) provided is empty.	The badAlarmInformationReferenceList will contain the corresponding AlarmId along with the failureReason - " Id provided is invalid. Id cannot be null or empty.” The overall status of the operation will be "OperationFailed" if the operation did not succeed for all the remaining Tickets or

		otherwise “OperationPartiallySucceeded” if the operation succeeded for some of the Tickets.
7	DM down	The badAlarmInformationReferenceList will contain the corresponding AlarmId along with the failureReason – “AcknowledgmentFailed” and additionalFailureReason – “DM (<DM ID>) not found.” The overall status of the operation will be “OperationFailed” if the operation did not succeed for all the remaining Tickets or otherwise “OperationPartiallySucceeded” if the operation succeeded for some of the Tickets.
8	List don't have even a single Alarm Id (Empty list)	SOAP Fault with message – “Invalid Request. At least one Alarm Id is required.”
9	User (ackUserId) is not present	SOAP Fault with message – “Invalid User Id. User Id cannot be null or empty.”
10	Alarm Ids in the request exceeded the limit specified in the com.cisco.prime.esb.tgpp.interface.cfg file.	SOAP Fault with message – “Number of alarms in request (<No. of Alarm Ids in request>) exceeded the maximum limit set (<bulkAlarmOpMaxLimit value in cfg. File>)”

7.10.4 AlarmIRP::SetComment

Description:

The API will be used to add a comment to one or more Tickets in the Prime Network.

Input:

Table 7-9: Input Paramters to add comment to a list of Alarms

Sl.No	Parameter	Data Type	Description
1	alarmInformationReferenceList	List	List of AlarmInformation.alarmId(corresponds to an ID of a Ticket in Prime Network) – It carries one or more identifiers identifying AlarmInformation in AlarmList.
2	ackUserId	String	The ID of the user who wishes to add comment to the list of Tickets
3	commentText	String	The comment that is to be added to the list of Tickets.

Output:

The API gives the information about the status of the setComment operation and the information about the Alarms for those the setComment operation failed.

Sl.No	Parameter	Data Type	Description
1	badAlarmInformation ReferenceList	List	List of pair of AlarmInformation.alarmId(Same as the input) and the failure reason - If the comment is added to all the Alarms, this information is absent. Else this list contains details about the alarms for those the setComment operation didn't succeed along with the failure reason for each.
2	Status	ENUM(OperationSucceeded, OperationFailed, OperationPartiallySucceeded)	If the comment is added to some of the Alarms, status = OperationPartiallySucceeded. If comment is added to all the Tickets, status = OperationSucceeded. If all comment is not added to any of the Tickets, status=OperationFailed.

Error:

The following error scenarios will be handled and reported by the API:

Sl.No	Condition	Error
1	Alarm Id(In this case the Ticket ID in Prime Network) is not present in Prime Network (Standalone deployment)	The badAlarmInformationReferenceList will contain the corresponding AlarmId along with the failureReason - "Execution failed. Ticket is in use or does not exist." The overall status of the operation will be "OperationFailed" if the operation did not succeed for all the remaining Tickets or otherwise "OperationPartiallySucceeded" if the operation succeeded for some of the Tickets.
2	Alarm Id(In this case the Ticket ID in Prime Network) provided is neither an Integer nor in the format – {[NewAlarm(Id=<Ticket ID>)]} (Standalone deployment).	The badAlarmInformationReferenceList will contain the corresponding AlarmId along with the failureReason - " Invalid Alarm Id provided. Please enter a valid Alarm Id."

		The overall status of the operation will be "OperationFailed" if the operation did not succeed for all the remaining Tickets or otherwise “OperationPartiallySucceeded” if the operation succeeded for some of the Tickets.
3	Alarm Id(In this case the Ticket ID in Prime Network) is not present in Prime Fault Management (Suite deployment)	The badAlarmInformationReferenceList will contain the corresponding AlarmId along with the failureReason - “UnknownAlarmId” and additionalFailureReason - "Alarm does not exist." The overall status of the operation will be "OperationFailed" if the operation did not succeed for all the remaining Tickets or otherwise “OperationPartiallySucceeded” if the operation succeeded for some of the Tickets.
4	Alarm Id(In this case the Ticket ID in Prime Network) provided is not an Integer (Suite deployment).	The badAlarmInformationReferenceList will contain the corresponding AlarmId along with the failureReason - " UnknownAlarmId " and additionalFailureReason - “Unable to look up Alarm Id. Error occured while looking up the Alarm Id.” The overall status of the operation will be "OperationFailed" if the operation did not succeed for all the remaining Tickets or otherwise “OperationPartiallySucceeded” if the operation succeeded for some of the Tickets.
5	Alarm operation succeeded but FM updating failed for an Alarm Id(In this case the Ticket ID in Prime Network) (Suite deployment).	The badAlarmInformationReferenceList will contain the corresponding AlarmId along with the failureReason - "AcknowledgmentFailed" and additionalFailureReason - “Alarm operation succeeded on DM. But failed to update FM/ But no response received for FM update operation.” The overall status of the operation will be “OperationPartiallySucceeded” if the operation did not succeed for all/some of the remaining Tickets. FM update failure after the operation succeeded on the DM is considered as partial success.
6	Alarm Id(In this case the Ticket ID in Prime Network) provided is empty.	The badAlarmInformationReferenceList will contain the corresponding AlarmId along with

		the failureReason - “Id provided is invalid. Id cannot be null or empty.” The overall status of the operation will be "OperationFailed" if the operation did not succeed for all the remaining Tickets or otherwise “OperationPartiallySucceeded” if the operation succeeded for some of the Tickets.
7		The badAlarmInformationReferenceList will contain the corresponding AlarmId along with the failureReason – “AcknowledgmentFailed” and additionalFailureReason – “DM (<DM ID>) not found.” The overall status of the operation will be “OperationFailed” if the operation did not succeed for all the remaining Tickets or otherwise “OperationPartiallySucceeded” if the operation succeeded for some of the Tickets.
8	List don't have even a single Alarm Id (Empty list)	SOAP Fault with message – “Invalid Request. At least one Alarm Id is required.”
9	User (commentUserId) is not present	SOAP Fault with message – “Invalid User Id. User Id cannot be null or empty.”
10	Alarm Ids in the request exceeded the limit specified in the com.cisco.prime.esb.tgpp.interface.cfg file.	SOAP Fault with message – “Number of alarms in request (<No. of Alarm Ids in request>) exceeded the maximum limit set (<bulkAlarmOpMaxLimit value in cfg. File>)”

7.10.5 AlarmIRP::clearAlarms

Description:

The API will be used to Force Clear one or more Tickets in the Prime Network.

Input:

Table 7-10: Input Paramters to clear a list of Alarms

Sl.No	Parameter	Data Type	Description

1	alarmInformationReferenceList	List	List of AlarmInformation.alarmId(corresponds to an ID of a Ticket in the Prime Network) - It carries one or more identifiers identifying AlarmInformation in AlarmList.
2	ackUserId	String	The ID of the user who wishes to clear the Tickets

Output:

The API gives the information about the status of the clear operation and the information about the Alarms that are not cleared.

Sl.No	Parameter	Data Type	Description
1	badAlarmInformation ReferenceList	List	List of pair of AlarmInformation.alarmId(same as the input) and the failure reason - If all the Tickets are cleared, this information is absent. Else this list contains details about the Tickets that are not cleared.
2	Status	ENUM(OperationSucceeded, OperationFailed, OperationPartiallySucceeded)	If some of the Tickets are cleared, status = OperationPartiallySucceeded. If all the Tickets are cleared, status = OperationSucceeded. If none of the Tickets are cleared, status=OperationFailed.

Error:

The following error scenarios will be handled and reported by the API:

Sl.No	Condition	Error
1	Alarm Id(In this case the Ticket ID in Prime Network) is not present in Prime Network (Standalone deployment)	The badAlarmInformationReferenceList will contain the corresponding AlarmId along with the failureReason - "Execution failed. Ticket is in use or does not exist." The overall status of the operation will be "OperationFailed" if the operation did not succeed for all the remaining Tickets or

		otherwise “OperationPartiallySucceeded” if the operation succeeded for some of the Tickets.
2	Alarm Id(In this case the Ticket ID in Prime Network) provided is neither an Integer nor in the format – {[NewAlarm(Id=<Ticket ID>)]}	The badAlarmInformationReferenceList will contain the corresponding AlarmId along with the failureReason - " Invalid Alarm Id provided. Please enter a valid Alarm Id.” The overall status of the operation will be "OperationFailed" if the operation did not succeed for all the remaining Tickets or otherwise “OperationPartiallySucceeded” if the operation succeeded for some of the Tickets.
3	Alarm Id(In this case the Ticket ID in Prime Network) is not present in Prime Fault Management (Suite deployment)	The badAlarmInformationReferenceList will contain the corresponding AlarmId along with the failureReason - “UnknownAlarmId” and additionalFailureReason - "Alarm does not exist." The overall status of the operation will be "OperationFailed" if the operation did not succeed for all the remaining Tickets or otherwise “OperationPartiallySucceeded” if the operation succeeded for some of the Tickets.
4	Alarm Id(In this case the Ticket ID in Prime Network) provided is not an Integer (Suite deployment).	The badAlarmInformationReferenceList will contain the corresponding AlarmId along with the failureReason - " UnknownAlarmId " and additionalFailureReason - “Unable to look up Alarm Id. Error occured while looking up the Alarm Id.” The overall status of the operation will be "OperationFailed" if the operation did not succeed for all the remaining Tickets or otherwise “OperationPartiallySucceeded” if the operation succeeded for some of the Tickets.
5	Alarm operation succeeded but FM updating failed for an Alarm Id(In this case the Ticket ID in Prime Network)(Suite deployment).	The badAlarmInformationReferenceList will contain the corresponding AlarmId along with the failureReason - "AcknowledgmentFailed" and additionalFailureReason - “Alarm operation succeeded on DM. But failed to update FM/ But no response received for FM update operation."

		The overall status of the operation will be “OperationPartiallySucceeded” if the operation did not succeed for all/some of the remaining Tickets. FM update failure after the operation succeeded on the DM is considered as partial success.
6	Alarm Id(In this case the Ticket ID in Prime Network) provided is empty.	The badAlarmInformationReferenceList will contain the corresponding AlarmId along with the failureReason - “Id provided is invalid. Id cannot be null or empty.” The overall status of the operation will be "OperationFailed" if the operation did not succeed for all the remaining Tickets or otherwise “OperationPartiallySucceeded” if the operation succeeded for some of the Tickets.
7	DM down	The badAlarmInformationReferenceList will contain the corresponding AlarmId along with the failureReason – “AcknowledgmentFailed” and additionalFailureReason – “DM (<DM ID>) not found.” The overall status of the operation will be “OperationFailed” if the operation did not succeed for all the remaining Tickets or otherwise “OperationPartiallySucceeded” if the operation succeeded for some of the Tickets.
8	List don't have even a single Alarm Id (Empty list)	SOAP Fault with message – “Invalid Request. At least one Alarm Id is required.”
9	User (clearUserId) is not present	SOAP Fault with message – “Invalid User Id. User Id cannot be null or empty.”
10	Alarm Ids in the request exceeded the limit specified in the com.cisco.prime.esb.tgpp.interface.cfg file.	SOAP Fault with message – “Number of alarms in request (<No. of Alarm Ids in request>) exceeded the maximum limit set (<bulkAlarmOpMaxLimit value in cfg. File>)”

7.10.6 AlarmIRP:: notifyNewAlarm

Once a new alarm is received from Prime Network, Prime Central notifies this alarm to all the subscribed OSS clients. Supported only non-security alarms.

Note: Supported only on Suite Mode.

Input

Sl.No	Parameter	Data Type	Description
1	objectClass	String	Class of the Monitored entity
2	objectInstance	String	The Object Identifier which identifies the device/component instance in the Prime Network.
3	notificationId	Long	Identifies the notification which is a sequential number that uniquely identifies the alarm information
4	eventTime	XMLGregorianCalendar	The time when the Ticket is raised. Shall be of best effort basis.
5	systemDN	String	Indicates the instance of the IRP Agent
6	notificationType	String	Type of the notification.The value will be "notifyNewAlarm"
7	probableCause	String	Not Supported. Probable Cause information will be available in Troubleshooting field of additionalInformation parameter
8	perceivedSeverity	ENUM	Indicates the Ticket's severity level. Possible values: Critical, Major, Minor, Warning, Intermediate, Cleared
9	alarmType	ENUM	Indicates the type of the Ticket Possible values: "Communications Alarm", "Processing Error Alarm", "Environmental Alarm". "Quality Of Service Alarm" or "Equipment Alarm"
10	specificProblem	String	Indicates the specific problem associated with the alarm
11	additionalText	String	Description of the Ticket
12	additionalInformation	List	Additional information related to the ticket Contains the following fields: Identifier, AlarmCategory, AlarmServerAddress, AlertGroup,

			AlarmManagedObjectAddress, AlertId, OriginalTrapName, Details, Troubleshooting, Port description **Note**: Port description shall be available only for tickets from the Prime Network.
13	alarmId	String	The identifier which uniquely identifies a Ticket in the Prime Central Fault Management

Note 1: probableCause is not compliant to X733 standards

Note 2 : Alarm Notifications are supported for devices ASR 5000, ASR 5500, ASR9006, ASR 9010, ASR 9922, ASR1004 and ASR1006

7.10.7 AlarmIRP:: notifyAckStateChanged

The subscribed OSS clients are notified regarding changes in the alarms Acknowledgement state.

Note: Supported only on Suite Mode.

Input

Sl.No	Parameter	Data Type	Description
1	objectClass	String	Class of the Monitored entity
2	objectInstance	String	The Object Identifier which identifies the device/component instance in the Prime Network.
3	notificationId	Long	Identifies the notification which is a sequential number that uniquely identifies the Alarm information
4	eventTime	XMLGregorianCalendar	The time when the Ticket is acknowledged.
5	systemDN	String	Indicates the instance of the IRP Agent

6	notificationType	String	Type of the notification.The value will be "notifyAckStateChanged"
7	probableCause	String	Not Supported
8	perceivedSeverity	ENUM	Indicates the Ticket's severity level. Possible values: Critical, Major, Minor, Warning, Intermediate, Cleared
9	alarmType	ENUM	Indicates the type of the Ticket Possible values: "Communications Alarm", "Processing Error Alarm", "Environmental Alarm". "Quality Of Service Alarm" or "Equipment Alarm"
10	alarmId	String	The identifier which uniquely identifies a Ticket in the Prime Central Fault Management
11	ackState	ENUM	Identifies the Acknowledgement state of the alarm
12	ackUserId	String	Identifies the user who has changed the Acknowledgement state

7.10.8 AlarmIRP:: notifyClearedAlarm

The subscribed OSS clients are notified regarding the cleared notifications received from Prime Network.

Note: Supported only on Suite Mode.

Input

Sl.No	Parameter	Data Type	Description

1	objectClass	String	Class of the Monitored entity
2	objectInstance	String	The Object Identifier which identifies the device/component instance in the Prime Network.
3	notificationId	Long	Identifies the notification which is a sequential number that uniquely identifies the Alarm information
4	eventTime	XMLGregorianCalendar	The time when the Ticket is raised. Shall be of best effort basis.
5	systemDN	String	Indicates the instance of the IRP Agent
6	notificationType	String	Type of the notification.The value will be "notifyClearedAlarm"
7	probableCause	String	Not Supported
8	perceivedSeverity	ENUM	Indicates the Ticket's severity level. Possible values: Critical, Major, Minor, Warning, Intermediate, Cleared
9	alarmType	ENUM	Indicates the type of the Ticket. Possible values: "Communications Alarm", "Processing Error Alarm", "Environmental Alarm". "Quality Of Service Alarm" or "Equipment Alarm"
10	alarmId	String	The identifier which uniquely identifies a Ticket in the Prime Central Fault Management.
11	clearUserId	String	Carries identity of the user who invokes clear alarm operation.

7.10.9 AlarmIRP:: notifyUpdateAlarm

This is custom API used to notify trap name updates and description updates to OSS. Trap name/Description updates received as part of Prime Network tickets, are notified by Prime Central to all the subscribed OSS clients. It is only supported for non-security alarms.

Note: Supported only on Suite Mode and applicable for Prime Network alarms.

Input

Sl.No	Parameter	Data Type	Description
1	objectClass	String	Class of the Monitored entity
2	objectInstance	String	The Object Identifier which identifies the device/component instance in the Prime Network.

3	notificationId	Long	Identifies the notification which is a sequential number that uniquely identifies the alarm information
4	eventTime	XMLGregorianCalendar	The time when the Ticket is raised. Shall be of best effort basis.
5	systemDN	String	Indicates the instance of the IRP Agent
6	notificationType	String	Type of the notification.The value will be "notifyUpdateAlarm"
7	additionalText	String	Description of the Ticket.
8	additionalInformation	List	Additional information related to the ticket Contains the following fields: Identifier, AlarmCategory, AlarmServerAddress, AlertGroup, AlarmManagedObjectAddress, AlertId, OriginalTrapName, Details, Troubleshooting, Port description. **Note**: Port description shall be available only for tickets from Prime Network.
9	alarmId	String	The identifier which uniquely identifies a Ticket in the Prime Central Fault Management.
10	perceivedSeverity	ENUM	Indicates the Ticket's severity level. Possible values: Critical, Major, Minor, Warning, Intermediate, Cleared
11	alarmType	ENUM	Indicates the type of the Ticket. Possible values: "Communications Alarm", "Processing Error Alarm", "Environmental Alarm". "Quality Of Service Alarm" or "Equipment Alarm"

7.10.10 AlarmIRP :: notifyChangedAlarm

The subscribed OSS clients are notified about changes in the severity state of alarms. It is only supported for non-security alarms.

Note: *Supported only on Suite Mode and applicable for Prime Network alarms.*

Input

Sl.No	Parameter	Data Type	Description
1	objectClass	String	Class of the Monitored entity.
2	objectInstance	String	The Object Identifier, which identifies the device/component instance in the Prime Network.
3	notificationId	Long	Identifies the notification, which is a sequential number that uniquely identifies the alarm information.
4	eventTime	XMLGregorianCalendar	The time when the Ticket is updated.
5	systemDN	String	Indicates the instance of the IRP Agent.
6	notificationType	String	Type of the notification.The value will be "notifyChangedAlarm"
7	probableCause	String	Not supported as PN does not comply to X733 standards. Shown as “Indeterminate”.
8	perceivedSeverity	ENUM	Indicates the Ticket’s severity level. Possible values: Critical, Major, Minor, Warning, Intermediate.
9	alarmType	ENUM	Indicates the type of the Ticket. Possible values: “Communications Alarm", "Processing Error Alarm", "Environmental Alarm". "Quality Of Service Alarm" or "Equipment Alarm"
10	alarmId	String	The identifier which uniquely identifies a Ticket in the Prime Central Fault Management.

Note: *Prime Network sends multiple updates on Severity change, TrapName change, and Description change for an alarm. Prime Central captures updates that is sent from Prime Network and notifies OSS through:*

- *notifyChangedAlarm for Severity change*

- *notifyUpdateAlarm for updated trapname*
- *notifyUpdateAlarm for updated description*

If Prime Network sends a single update containing description change and trap name change, then a single notification might be sent to the OSS but with the updated description and the trap name.

7.11 Overview of 3GPP Notification IRP

The Notification IRP support provides support for subscribing and unsubscribing to 3GPP notifications. The current release supports Alarm Notification, Communication Surveillance (CS) Notification and File Transfer Notification.
For FTIRP, once the Inventory file generation completes successfully a File Ready Notification will be sent. If the inventory collection or file generation encounters an issue a File Preparation Error Notification will be sent.

7.12 3GPP Notification IRP Details

This interface supports APIs that will allow an OSS user to subscribe and unsubscribe for various notification categories.

The WSDL document describing the details of the Interface can be accessed from the Appendix section.

7.12.1 Notification IRP::subscribe

This interface is used to subscribe to 3GPP notifications. This request will enable an OSS user to receive any 3GPP notifications that is supported by the IRP agent. Currently we support the following categories

- File Transfer IRP Notifications (FTIRP)
- Alarm Notifications (ALARMIRP)
- Communication Surveillance Notifications (CSIRP)

Description:
The subscribe call can be issued by an OSS user to register for 3GPP notifications and enables the OSS user to receive the registered 3GPP notification. If the optional parameters are not given, the API registers the OSS user for all supported notification categories (current release supports File Trasfer Notifications, Alarm Notifications and Communication Surveillance Notifications). The Notification consumer should be active when notifications are sent. Notifications will not be stored for future forwards.

Input:

The following table lists the input arguments for the request

Sl.No	Parameter	Data Type	Description
1	managerReference	URL	A valid URL where the OSS client / IRP manager will be listening to. The URL validation will not be done during the registration process. This is a mandatory field.
2	timeTicks	Long	A long value indicating the time when this subscription request should expire. This is an optional value and is NOT supported in this release. Giving a non-numeric value will throw a SOAP / Web Service exception.
3	notificationCategories	ntfIRPData:NotificationCategorySetType	This is a set of strings that can be specified for which the subscription will be done. This is an optional parameter. In this release, we support the values “ALARMIRP”, “CSIRP” “FTIRP”. Being an optional parameter the user is not expected to give this as an input which will automatically subscribe the OSS user to receive the currently supported (FT , ALARM and CS Notifications).
4	Filter	String	This is an optional field and is NOT supported int this release . Any

			value specified in this field will be ignored. If supported the user can use this field to have a customer filtering for specified Notification categories.
5	ntfTrsnsServiceNS	anyURI	This parameter is used to specif the namespace of the Web Notification Transmission Service that will be used for sending notification. This is a mandatory field, but in the current release, this field will not be used.

NOTE: The **managerReference** and **ntfTrsnsServiceNS** are the only mandatory parameters.

Output:

The API gives the subscription ID as an output. This subscription ID will be used to unsubscribe for notifications.

Sl.No	Parameter	Data Type	Description
1	subscriptionID	String	The subscription ID will be returned upon a successful subscribe request. The subscription ID along with the manager Reference can be used to un-subscribe for notifications.
2	status	ENUM	Status of the subscribe operation performed. It can have values “OperationSucceeded”, “OperationFailed” and “OperationFailedExistingSubscription”.

Error:

The following error conditions will be reported by the API

Sl.No	Condition	Error

1.	Invalid Category	Exception indicating an invalid manager Reference or category
2	Already registered category	Exception indicating that any of the categories passed as input is already registered for this manager Reference.
3	One or more categories are not supported	An exception will be returned If any of the category entries passed

7.12.1.1 *Multi-DM Behaviour*

N/A

7.12.2 Notification IRP::unsubscribe

Description:

This API is used to unsubscribe to any 3GPP notification. The managerReference that is passed as input will be used to un-subscribe the OSS / requesting user. The managerReference is a mandatory parameter.

The operation will un-subscribe the Notification consumer from all subscribed categories associated with the subscriptionID. If no subscriptionID passed as input, it will try to unsubscribe for all supported categories.

Input

Sl.No	Parameter	Data Type	Description
1	managerReference	URL	A valid URL where the OSS client / IRP manager will be listening to. This is a mandatory field. This value will be used to remove the
2	subscriptionID	String	This is an optional parameter.

Output:

Upon successful completion of un-subscribe operation the manager reference will be returned.

Sl.No	Parameter	Data Type	Description

1	managerReference	String	The manager reference that was un-subscribed.
2	Status	ENUM	Status of the unsubscribe operation performed. It can have values "OperationSucceeded" and "OperationFailed".

Error:

The following error will be thrown under the specified conditions:

Condition	Error
Manager Reference does not exist or invalid	Exception indicating an invalid manager Reference
Invalid Subscription ID or Manager Reference	Exception indicating an invalid manager Reference or subscriptionID

7.12.2.1 *Multi-DM environment behavior*

N/A

7.12.3 Notification IRP::getSubscriptionIds

Description:
This API returns all registered subscription Ids for the caller manager reference, passed as input. The managerReference is a mandatory parameter.

Input

Sl.No	Parameter	Data Type	Description
1	managerReference	URL	A valid URL where the OSS client / IRP manager will be listening to. This is a mandatory field.

Output:

Sl.No	Parameter	Data Type	Description

1	subscriptionIdSet	String	It holds a set of the subscriptionId, each assigned as output parameter in previous subscribe operations invoked by the current IRPManager.
2	status	ENUM (Operation succeeded, Operation failed)	If is successful, status = OperationSuceeded. If is failed, status = OperationFailed.

Error:

The following error will be thrown under the specified conditions:

Condition	Error
Manager Reference does not exist or invalid	Exception indicating an invalid manager Reference

7.12.4 Notification IRP:: getNotificationCategories

Description:
This API is used to query the categories of notification supported by IRPAgent. IRPAgent returns the list of categories of notification supported. Each category of notification defines the name and the version of the IRP specification. The list of category of notification returned shall only contain the name and version of the IRP specifications that actually have notifications defined. IRPManager does not need to subscribe to invoke this operation.

Input

None

Output:

Upon successful completion of getNotificationCategories operation the NotificationCategoryList will be returned.

Sl.No	Parameter	Data Type	Description
1	NotificationCategoryList	String	SET OF (name and version of IRP specification) where each IRP is contained by IRPAgent and the attribute notificationNameProfile of the ManagedGenericIRP is not empty.

2	status	ENUM (Operation succeeded, Operation failed)	If is successful, status = OperationSuceeded. If is failed, status = OperationFailed.

7.13 3GPP FT Notification Consumer

The 3GPP Notification Consumer endpoint will be exposed as a Web Service endpoint. This endpoint can be used by the OSS users who wish to receive notifications to download the Notification Consumer Interface WSDL.
This endpoint will not support any operation and is deployed for getting the 3GPP FT IRP Notification Consumer WSDL.
The WSDL document can be accessed from the Appendix section.

7.14 Overview of 3GPP Notifications

The current version of Notification IRP will allow a subscribed user to receive the following notifications:

- 3GPP File Ready Notification
- 3GPP File Preparation Error Notification

7.14.1 3GPP File Ready Notification

A File Ready Notification will be generated for “getAllInventory” and “getManagedElement” API calls on the Inventory IRP. Only one File Ready Notification will be sent upon a successful completion of the inventory file creation.

7.14.1.1 *3GPP File Ready Notification SOAP Format*

The SOAP format for the File Ready Notification is shown below. One File Ready Notification will be generated per request if atleast one file was generated. The notification contains information about all the successfully generated files.
A notification sample is shown in the Appendix section.

7.14.2 3GPP File Preparation Error Notification

A File Preparation Error Notification will be generated for “getAllInventory” and “getManagedElement” API calls on the Inventory IRP. Only one File PreparationNotification will be sent if an error is encountered during inventory collection or file generation.

7.14.2.1 *3GPP File Preparation Error Notification SOAP Format*

This SOAP message for 3GPP File Preparation Error Notification is shown below. The SOAP message will not contain any information about the files. This notification will be generated if the file creation process encounters any error.

A notification sample is shown in the Appendix section.

7.14.3 3GPP FT Notification Multi-DM Behavior

Multi-DM environment when all participating DMs generate inventory files for all supported devices without encountering failure.

1. Notification Consumer (eg: OSS Client) subscribes to notifications.
2. Issues request to “getAllInventory” to Web Serice on PC host
3. All participating DMs are free to handle request.
4. Request initiated on all participating DMs
5. File Generation is successful on each of the DMs
6. Each DM sends a “FileReadyNotification”
7. Notification consumer receives one “FileReadyNotification” per DM instance.

Multi-DM environment when no files are generated and DM encounters failure when generating inventory files for all managed devices

1. Notification Consumer (eg: OSS Client) subscribes to notifications.
2. Issues request to “getAllInventory” to Web Serice on PC host
3. All participating DMs are free to handle request.
4. Request initiated on all participating DMs
5. File Generation is un-successful on each of the DMs
6. Each DM sends a “FilePreparationErrorNotification”
7. Notification consumer receives one “FilePreparationErrorNotification” per DM instance.

Multi-DM environment with partial success and partial failure use case, when some files gets generated for a set of managed devices and fails for a sub-set of the devices.

1. Notification Consumer (eg: OSS Client) subscribes to notifications.
2. Issues request to “getAllInventory” to Web Serice on PC host
3. All participating DMs are free to handle request.
4. Request initiated on all participating DMs
5. File Generation is successful for a sub-set of DMs and un-successful for a sub-set on each / some of the DMs
6. Each DM sends a “FileReadyNotification” containing those files which were successfully created and a “FilePreparationErrorNotification” for those devices where the DM fails to generate any file.

7. Notification consumer receives one “FileReadyNotification” for a set of successful file creation and one “FilePreparationErrorNotification” for all the failed file creation per DM instance.

7.15 Overview of Communication Surveillance IRP (CS IRP)

This Communication Surveillance IRP object represents a capability that can emit heartbeat notification to all subscribed OSS clients periodically. The emission frequency is controlled by an attribute named heartbeatPeriod.

7.16 3GPP Communication Surveillance IRP Interface Details

This section describes the 3GPP Communication Surveillance IRP Interface details. The operations supported in CSIRP, input, output and functionality will be explained.

The WSDL document describing the details of the Interface can be accessed from the Appendix section.

7.16.1 CSIRP::getHeartbeatPeriod

The OSS client invokes this operation to obtan the current hearbeat period. The OSS client can invoke this request without any subscription.

Input :

No input parameters.

Output:

Upon successful completion of the operation the heartbeat period will be returned.

Sl.No	Parameter	Data Type	Description
1	heartbeatPeriod	int	It denotes frequency at which IRPAgent transmits heartbeat notifications
2	status	ENUM (Operation succeeded, Operation failed)	Status of setHeartbeatPeriod operation performed.

7.16.2 CSIRP::setHeartbeatPeriod

The OSS client invokes this operation to set the hearbeat period. The hearbeat period is in minutes ranges from 5 min to 60 min. After successful completion of the operation, IRP Agent shall emit the notifyHeartbeat immediately and continue to emit based on the newly specified heartbeatPeriod, to all established notification subscriptions of all subscribed OSS clients. If the heartbeatPeriod specified is same as the current value in IRPAgent, the

operation shall fail The OSS client can invoke this request without any subscription. Any OSS client can change the value of the Heartbeat period, and the same values will be reflected across all the OSS clients.

Input :

Sl.No	Parameter	Data Type	Description
1	heartbeatPeriod	int	It denotes the frequency at which IRPAgent transmits heartbeat notifications.

Output:
Upon successful completion of the operation, the heartbeat period will be reflected

Sl.No	Parameter	Data Type	Description
1	status	ENUM (Operation succeeded, Operation failed)	Status of the SetHeartbeatPeriod operation performed.

Error:
The following error will be thrown under the specified conditions:

Condition	Error
invalidHeartbeatPeriod	The input parameter of heartbeatPeriod is not within the allowed range
conflictingHeartbeatPeriod	The input parameter of heartbeatPeriod is same as the current value in IRPAgent.

7.16.3 CSIRP::notifyHeartbeat

The subscribed OSS clients are notified that the resources supporting the communication path between the IRPAgent and the notification receiving OSS clients are working.

Input

Sl.No	Parameter	Data Type	Description
1	objectClass	String	Class of the Monitored entity
2	objectInstance	String	The Object Identifier which identifies the device/component instance in the Prime Network.

3	notificationId	Long	Identifies the notification that carries the Alarm information uniquely per Managed Entity
4	eventTime	XMLGregorianCalendar	The time when the Ticket is raised. Shall be of best effort basis.
5	systemDN	String	Indicates the instance of the IRP Agent
6	notificationType	String	Type of the notification.The value will be "notifyHeartBeat"
7	heartbeatPeriod	Integer	It specifies the time between two emissions of heartbeat notifications. A value of zero implies there is no heartbeat emission. The unit is minute. Range: value range of heartbeat period is from 5min to 60min, 0 is also a legal value
8	locator	String	Identifies the communication path used by the notifications. The value will be “channel 1”
9	triggerFlag	ENUM	Indicates the notification triggered source.The value of this parameter is "IRPAgent"

7.17 Scheduling Web Services

Prime Network Integration Layer uses Prime Network Scheduling framework to schedule the following 3GPP Web Services.

- InventoryIRP:: getAllInventory
- InventoryIRP:: getManagedElement

For Scheduling Web Services, user has to use the options available in the Prime Network Component.

For more details on the Prime Network Web Scheduler , see *Cisco Prime Network 4.2.3 User Guide*.

7.18 3GPP Standard Compliance

This version of 3GPP inventory management is based on 3GPP Release 10 specification (TS 32.690 V10.0.0). The interfaces to retrieve inventory information from the IRP Agent follow the “inventoryNRM.xsd” schema described in TS 32.696 V10.3.0.

The 3GPP standard does not define a SOAP solution set for Inventory Management. This is a Cisco extension for the SOAP solution. The XML output conforms to the 3GPP standard based inventoryNRM schema. The inventory file contains both the physical and logical inventory information.

The logical inventory data contains both standard based and vendor (Cisco) extension data. The Vendor extension data will be present under the vendor specific data container (VsDataContainer) section inside the logical inventory section in the XML data file. For more details on these 3GPP vendor extensions, see Appendix.

This version of 3GPP Alarm IRP Notifications (TS 32.111-1, TS 32.111-2, TS 32.111-5) and CS IRP (TS 32.351, TS 32.352, TS 32.355, TS 32.357) are based on 3GPP Release 12 specification.

Refer to the 3GPP and MTOSI standards in the link http://www.3gpp.org/specifications.

7.19 Trouble Shooting – 3GPP

The below table includes the issues that might be encountered while setting up OSS integration layer and steps to troubleshoot the problem.

Table 7-11 OSS Integration Problems and Troubleshooting Procedure

Problem Description	Indication	Probable Cause	Troubleshooting Procedure
Web Services Security Exception	Web Service call to any of the Interfaces will throw a WS Security exception with authentication failure message	The user ID / password provided for the web service call might not be correct.	Use a proper User ID / password for the web services call.
No DMs Available Exception	Exception message from the Web Service call, stating that no DMs are available.	The communication to PN is not proper. The Integration layer was not able to communicate with the domain manager (DM).	• Verify that the Prime Networks application is running. • Network Connectivity to the Prime Networks machine is proper.
Exception indicating No Managed Element in Network	A call to getAllInventory returns a Web Services exception stating that there are no Managed	The PN system is not configured to have any managed elements	• Verify if the PN system contains any managed elements. • Add network elements that can be managed by PN. • Issue the Web Service request.

	Elements in the network.		• Verify if the Exception message disappears and Web Service response indicating start of inventory collection appears. • Verify if Inventory files are getting created
Inventory files are not copied to FTP servers	Inventory files are not present on the FTP server (primary and secondary) configured.	The FTP server configuration is not proper.	• Verify the FTP server hostname is reachable. • FTP / SFTP service is running on the configured hosts. • Login and password is properly specified during the FTP configuration setup. **Note:** The password will be encrypted in the configuration file.
getManagedElement returns a SOAP Exception	A call to getManagedElement returns a Web Services exception stating that the device is not in up-state though it is actually up.	The device name specified in request is incorrect	Cross check the device name in getAllManagedElementNames response and verify if the device is not in up state
getManagedEle, ent returns an ME not in up state message	Call to getManagedElement returns with exception indicating the ME is not in up-state	The Managed Element is either not managed by the EMS or is not a valid name.	This is a valid condition. The managed element is expected to be managed by the EMS.
Call to any WebService operation returns a timeout exception.	JMS did not get response in specified time 3000 milliseconds (time out)	There might be an exception in the processing on the server.	Please check the log file under the INSTALL_DIR/data/log, in the servicemix.log file for any exceptions.
Call to any WebService operation returns an authentication failure error	Exception is received by the SOAP client. Exception: java.lang.Exception: java.lang.IllegalStateException: Error communicating with	The credential given does not match with the PN credential.	Please make sure that the credentials given to the Web Service all is consistent with the PN credentials.

	ANA host 10.105.39.39		
FTIRP Webservice does not list any files for a call to listAvailableFiles	Message indicating : No files to display is given as a SOAP response	No files exists on the system to be displayed	Log on to the PN host, primary and secondary FTP server. Match the files based on the start time and end time supplied for the API.
FTIRP Webservice gets files present on the local file system.	FTP is configured on PN host. The File list info lists the files indicating the host IP where the Web Service is deployed instead of the FTP servers name.	Probable cause: • (s)FTP servers are down. • (s)FTP credentials are not correct. • (s)FTP access is not allowed to the FTP servers.	• Check the FTP access • Check the FTP permissions • Check the FTP credentials.
FTIRP WebService gets files present under the primary FTP server only.	Files listed are only from the primary FTP server.	Replication is not configured.	• The replication of FTP servers is not configured.
Web Service Scheduler: getAllInventory and getManagedElement Web services are scheduled but the jobs are not executed.	The inventory files are not getting generated after the scheduled time elapses.	The scheduler might be down on the Prime network DM.	• Log on to the PN system on which the scheduling is done. • Verify in the scheduler logs to check if the job is scheduled. • Verify if the Web Service is accessible.
OSS client subscribed to notifications with an invalid manager URI, but not receiving any.	No notifications received.	Manager URI (TCP connection) is not UP.	Log on to the system(Prime Network in standalone mode, Prime Central in suite mode) which OSS client is subscribed to. Verify servicemix logs, and check for below error. • *Caused by: java.net.SocketTimeoutException: SocketTimeoutException invoking http://<OSS Client ip>:<OSS Client port>/mockNotificationIRPNtfSer*

			viceSoapBinding: connect timed out

8 MTOSI OSS Integration

Cisco implementation of MTOSI APIs provide North Bound Interface support for the retrieval of physical inventory, Carrier Ethernet connection resources and notifications of respecitive resource changes.

- Managed Elements and Equipment Inventory
- Ethernet Virtual Connection Resource Inventory
- Inventory Object Create/Delete/Update and Attribute Value Change Notifications

Cisco MTOSI Information Model is designed to conform to MTOSI 2.0 information model and operational APIs. Cisco reference implementation extensions are introduced to support proprietary APIs and name space as per Cisco PrimeSuite release.

For a sample SOAP Request and Response for all the APIs defined in these interfaces, refer to the Prime Network OSS Integration Guide SOAP Request Response document on Cisco Developer Network.

8.1 Supported Devices for MTOSI Interface

The below table list of supported devices for MTOSI.

Table 8-1: Supported Devices for 3GPP and MTOSI

	Supported DM Versions	Supported Devices
MTOSI	PN 4.2.1, 4.2.2, 4.2.3, 4.3, 4.3.1, 4.3.2, 5.0 PC 1.5, 1.5.1, 1.5.2, 1.5.3, 2.0	Device support is based on PN 4.2.1, 4.2.2, 4.2.3, 4.3, 4.3.1, 4.3.2, 5.0

8.2 MTOSI Interface and supported APIs

This section lists the summary of the Interfaces and the associated APIs supported by MTOSI

Sl.No	Interface Name	Interface Version	API Name	MTOSI Standard	Cisco Extenson
1	**Managed ElementNames Retrieval**	**MTOSI 2.0**	**getAllManagedElement Names**		**Y**

2	**ManagedElementRetrieval**	**MTOSI 2.0**	**getManagedElement**	**Y**	
3	**Equipment Inventory Retrieval**	**MTOSI 2.0**	**getAllEquipment**	**Y**	
4			**getContainedEquipment**	**Y**	
5			**getEquipment**	**Y**	
6			**getAllRemoteEquipmentByPTP**		**Y**
7	**PhysicalTerminationPoint Retrieval**	**MTOSI 2.0**	**getAllSupportedPhysicalTerminationPoints**	**Y**	
8	**ResourceInventoryRetrieval**	**MTOSI 2.0**	**getInventory**	**Y**	
9	**NotificationProducer**	**MTOSI 2.0**	**Subscribe**	**Y**	
10			**Unsubscribe**	**Y**	
11	**Connection Retrieval**	**MTOSI 2.0**	**getSubnetworkConnection**	**Y**	
12			**getRoute**	**Y**	
13	**FlowDomainRetrieval**	**MTOSI 2.0**	**getFlowDomainFragment**	**Y**	
14			**getFlowDomainFragmentRoute**	**Y**	
15			**getAllFlowDomainFragmentNames**		**Y**

8.3 MTOSI API Summary

This section lists the MTOSI APIs with their Request, Response and Description. The APIs described here include the following

- ManagedElement retrieval
- ManagedElementNames Retrieval
- Equipment Inventory Retrieval
- Notification
- ConnectionRetrieval

The below table describes the APIs

Table 8-2: Supported APIs for Managed Elements, Equipment Inventory

API	Request	Response	Description
getAllManagedElementNames(...)	getAllManagedElementNamesRequest	getAllManagedElementNamesResponse - a list	Returns all Managed Element Names. This is a proprietory API to facilitate getManagedElement

		Managed Element Names	API for a specific managed element retrieval.
getManagedElement(...)	getManagedElementRequest - a list of RDN consisting of MD/ME name value pairs	getManagedElementResponse - a specific Management Element instance	Returns a requested Managed Element instance. See the corresponding wsdl/xsd files for more details. • ManageResourceInventory/IIS/wsdl/ManagedElementRetrieval/ManagedElementRetrievalHttp.wsdl • ManageResourceInventory/IIS/xsd/ManagedElementRetrievalMessages.xsd ME Attribute Extension as per requirement are defined in – • NetworkResourceFulfillment/IIS/xsd/Cisco_ME_EQ_Inventory.xsd
getAllEquipment(..)	getAllEquipmentRequest - name of the ME or equipment holder for which to retrieve contained equipment and equipment holders	getAllEquipmentResponse - a list of all of the equipment and equipment holders contained in a managed element or equipment holders	Returns a list of Equipment Holder, Equipment. See the corresponding wsdl/xsd files for more details. • ManageResourceInventory/IIS/wsdl/EquipmentInventoryRetrieval/EquipmentInventoryRetrievalHttp.wsdl • ManageResourceInventory/IIS/xsd/EquipmentInventoryRetrievalMessages.xsd Equipment Attribute Extension as per requirement are defined in – • NetworkResourceFulfillment/IIS/xsd/Cisco_ME_EQ_Inventory.xsd
getContainedEquipment(...)	getAllEquipmentRequest - name of the equipment holder to retrieve the next level contained equipment and equipment holders	getAllEquipmentResponse - a list of all of the equipment and equipment holders contained in the equipment holders	Returns the next level contained Equipment Holder and Equipment list. See the corresponding wsdl/xsd files for more details. ManageResourceInventory/IIS/wsdl/EquipmentInventoryRetrieval

			/EquipmentInventoryRetrievalHttp.wsdl ManageResourceInventory/IIS/xsd/EquipmentInventoryRetrievalMessages.xsd Equipment Attribute Extension as per requirement are defined in – NetworkResourceFulfillment/IIS/xsd/Cisco_ME_EQ_Inventory.xsd
getAllSupportedPhysicalTerminationPoints(...)	getAllSupportedPhysicalTerminationPointsRequest - a list of RDNs that specify the containing equipment: MD/ME/EH[/EH/EH]/EQ	getAllSupportedPhysicalTerminationPointsResponse - a list of physical termination endpoints (PTP) of the specified equipment	Returns a list PTPs. See the corresponding wsdl/xsd files for more details. • ManageResourceInventory/IIS/wsdl/TerminationPointRetrieval/TerminationPointRetrievalMessages.wsdl • ManageResourceInventory/IIS/xsd/TerminationPointRetrievalMessages.xsd PTP Attribute Extensions per requirements are defined in – • NetworkResourceFulfillment/IIS/xsd/Cisco_ME_EQ_Inventory.xsd
subscribe(...)	subscribeRequest - This operation allows the Client to subscribe for notifications	subscribeResponse - an unique subscription identifier is returned to the Client OS to be used when invoking the unsubscribe() for the given topic. Note that it must uniquely identify the request signature by its three elements: consumerEPR, topic, and selector.	The subscribe operation used to receive subscriptions from consumers . See the corresponding wsdl/xsd files for more details. • Framework/IIS/wsdl/NotificationProducer/NotificationProducerHttp.wsdl • Framework/IIS/xsd/NotificationMessages.xsd
unsubscribe(...)	unsubscribeRequest - This operation allows the Client to unsubscribe from a previous	unsubscribeResponse - response message structure of the unsubscribe operation. Note that it is an empty	The unsubscribe operation used to receive subscription cancellations from consumers. See the corresponding wsdl/xsd files for more details.

	subscribed notification channel.	payload. Failure should be handled as an exception.	• Framework/IIS/wsdl/NotificationProducer/NotificationProducerHttp.wsdl • Framework/IIS/xsd/NotificationMessages.xsd
notify(...)	not applicable	not applicable	One way (notification) message structure of the notify operation. This operation allows event notification to a client OS for the following event types: • AttributeValueChangeType • ObjectCreationType • ObjectDeletionType For more details, see Framework/IIS/wsdl/NotificationProducer/NotificationProducerHttp.wsdl file.
getSubnetworkConnection	getSubnetworkConnectionRequest – The SNC for which the details are requested	getSubnetworkConnectionResponse – The details of the SNC will be returned	The SNC details includes: sncState direction LayerRate staticProtectionLevel sncType aEndTpDataList zEndTpDataList reRouteAllowed networkRouted isReportingAlarm isFixed etc., For Details on the attributes, refer to NetworkResourceFullfilment/IIS/xsd/snc.xsd
getRoute	getRouteRequest – The SNC for which the route information is requested	getRouteResponse – The route details of the SNC	The Route Type element contains the partially ordered list of cross connects. For details on the attributes, refer to NetworkResourceFullfillment/IIS/xsd/route.xsd

NOTE: The above APIs will be supported to get information about individual MEs that participate in a ASR 9K cluster**.**

8.4 MTOSI Inventory Management

Cisco Prime Network supports the following features.

- Managed Elements and Equipment Inventory
- Inventory Object Create/Delete and Attribute Value Change Notifications
- Ethernet Virtual Connection Resource Inventory
- Connection Inventory

Cisco MTOSI Information Model is designed to conform to MTOSI 2.0 information model and operational APIs. Cisco reference implementation extensions are introduced to support proprietary APIs and name space as per Cisco PRIME Release requirements.

The sections below document all the APIs supported by Cisco Prime Central and Prime Network. Interfaces are defined in the WSDL and the corresponding data types can be found in XSD files.

8.5 MTOSI Interface Details

This section describes the MTOSI Interfaces supported.

8.5.1 Managed Element Retrieval Interface

The WSDL document describing the details of the Interface can be accessed from the Appendix section.

8.5.1.1 *getManagedElement*

Description: This operation returns a requested Managed Element instance.
Input

Sl.No	Request Parameter	Data Type	Description
1	ManagedDomain RDN	String	The Managed domain name Name=MD, value=CISCO_PRIME
2	ManagedElement Name RDN	String	The Managed element for which the request is made Eg: Name=ME, value=ME-NAME

Output

Sl.No	Response Parameter	Data Type	Description
1	ManagedElementNameResponse	ManagedElementNameResponse	The Data pertaining to the managed element is returned. For details please refer to the associated WSDLs given in this section.

Error
N/A

8.5.1.2 *getNetworkFunctionNamesByType*

Description: This operation returns supported mobility network functions by the device.

Input

Sl.No	Request Parameter	Data Type	Description
1	ManagedDomain RDN	String	The Managed domain name Name=MD, value=CISCO_PRIME
2	ManagedElement Name RDN	String	The Managed element for which the request is made Eg: Name=ME, value=ME-NAME
3	NetworkFunctionType	String	The network function supported by the device. Eg: Cisco_Mobility

Output

Sl.No	Response Parameter	Data Type	Description
1	GetNetworkFunctionNamesByTypeResponse	GetNetworkFunctionNamesByTypeResponse	This API will return all the supported mobility network functions by the device.

Error
N/A

8.5.1.3 *getNetworkFunction*

Description: This operation returns network function details for the input service.

Input

Sl.No	Request Parameter	Data Type	Description
1	ManagedDomain RDN	String	The Managed domain name Name=MD, value=CISCO_PRIME
2	ManagedElement Name RDN	String	The Managed element for which the request is made Eg: Name=ME, value=ME-NAME
3	NetworkFunctionType	String	This is the supported network function by the device. This string has three inputs, name – name of the service, context – context to which the service belongs to, serviceType – service type of input service. Eg : 'name':'PGW8','context':'PGW','serviceType':'PGWService'

Output

Sl.No	Response Parameter	Data Type	Description
1	GetNetworkFunctionResponse	GetNetworkFunctionResponse	This API will return details about the service provided in input request.

Error
N/A

8.5.2 Managed Element Names Retrieval Interface

The WSDL document describing the details of the Interface can be accessed from the Appendix section.

8.5.2.1 *getAllManagedElementNames*

Description: This operation allows a user to retrieve a list of managed element names that are managed by the NMS / EMS

Input

Sl.No	Request Parameter	Data Type	Description
1	managedElementsNameRequest	ANY	The request contains an empty XML tag, used to query all the

			managed elements present

Output

Sl.No	Response Parameter	Data Type	Description
1	ManagedElementNamesResponse	List<ManagedElementName>	A List of Managed Element Names managed by the management system. For details on the Output parameters refer to the WSDL section.

Error
N/A

8.5.3 Equipment Inventory Interface

The WSDL document describing the details of the Interface can be accessed from the Appendix section.

8.5.3.1 *getAllEquipment*

Description: This operation allows a user to retrieve the details about the Equipment queried. The output contains the complete information about the equipment.

Input

Sl.No	Request Parameter	Data Type	Description
1	getAllEquipmentRequest	RDN	The MD and ME RDN List. Name=MD, value=CISCO_PRIME, Name=ME, value=ME_NAME_1

Output

Sl.No	Response Parameter	Data Type	Description
1	getAllEquipmentResponse	getAllEquipmentResponse	A Complex Information sequence consisting of the Equipment with the details of holders and the associated equipments. For

			details please refer to the WSDL section.

Error
N/A

8.5.3.2 *getContainedEquipment*

Description: This operation allows a user to retireve information about the equipments contained inside the queried equipment.

Input

Sl.No	Request Parameter	Data Type	Description
1	getContainedEquipmentRequest	RDN	The MD and ME RDN List. Name=MD, value=CISCO_PRIME, Name=ME, value=ME_NAME_1 The Name of the equipment holder to retrieve the next level of contained equipment

Output

Sl.No	Response Parameter	Data Type	Description
1	getContainedEquipmentResponse	getContainedEquipmentResponse	The Next level of equipment contained inside the Equipment Holder. For details on the operation, refer to the WSDL section.

Error
N/A

8.5.3.3 *getEquipment*

Description: This operation allows a user to retireve information about the equipment specified in the request.

Input

Sl.No	Request Parameter	Data Type	Description

1	getEquipmentRequest	RDN	The MD and ME RDN List. Name=MD, value=CISCO_PRIME, Name=ME, value=ME_NAME_1 , Name=EQ, value=EquipmentName The Name of the equipment.

Output

Sl.No	Response Parameter	Data Type	Description
1	getEquipmentResponse	getEquipmentResponse	The details of the particular equipment queried will be returned. For details on refer to the WSDL section.

Error
N/A

8.5.3.4 *getAllRemoteEquipmentByPTP*

Description: This operation allows a user to retireve any remote equipments associated with the queried equipment.
This API will be extensively used to query the GPON devices to get information about the remotely connected ONUs. For details about the API usage in the GPON technology, refer to the following link on GPON support.

Input

Sl.No	Request parameter	Type	Description
1	MD	String	Management Domain name
2	ME	String	Managed Element name
3	PTP	String	The ONU PTP FDN /rack=<chassisId>/slot=<SlotNo>/port=<ONU Port No> Sample: /rack=chassis/slot=3/port=gpon3/1

Output
The response will contain all the ONU's that are connected to this OLT GPON Port. Only ME level information of the ONU will be modeled in response. And the remote units are modeled as shelves. The parameters in the response are explained below:

Sl.No	Response parameter	Type	Description

1	**getAllRemoteEquipmentByPTPResponse**	getAllRemoteEquipmentByPTPResponse	The Information about the units that are remotely connected to the given PTP. The details of the response, refer to GPON section.

Error
N/A

8.5.4 Physical TerminationPoint Retrieval Interface

The WSDL document describing the details of the Interface can be accessed from the Appendix section.

8.5.4.1 *getAllSupportedPhysicalTerminationPoints*

Description: This operation allows the user to get a list of physical termination points supported by the equipment queried for.

Input

Sl.No	Request parameter	Type	Description
1	MD	String	Management Domain name
2	ME	String	Managed Element name
3	EH	String	EquipmentHolder
4	EQ	String	Equipment Under which the PTPs are to be queried.

Output
The Output returns a list of supported physical termination points present inside the Equipment.

Sl.No	Response parameter	Type	Description
1	MD	String	Management Domain name
2	ME	String	Managed Element name
3	PTP	String	Physical Termination Point Eg: /rack=1/shelf=1/slot=2/port=1
4	discoveredName	String	The Name of the PTP as constructured by the Integration Layer. This name is used to identify the PTP Eg: “1-1 TEN_GE” – for PTPs in PPM holder 1 TEN_GE for PTPs that are under regular slots.
5	VendorExtensions	VendorExtension	Vendor extensions to the basic information

5.1	PTP_Line_Rate	String	Indicates the line rate as defined by the MTOSI standard
5.2	PTP Admin_State	String	The Admin State of the PTP
6	TransmissionParameters	Complex Data Type – TransmissionParameterList	Contains the transmission parameters
6.1	Layer Rate	String	The Layer rate for the PTP Eg: LR_Fast_Ethernet
6.2	ParameterList	ParameterList (List<NVPair>)	Contains a list of Name value pairs. The contents depends on the values filled by the EMS system. Eg:<ns7:parameterList> <ns2:nvs> <ns2:name>AdminState</ns2:name> <ns2:value>IN_SERVICE</ns2:value> </ns2:nvs> <ns2:nvs> <ns2:name>AlarmReporting</ns2:name> <ns2:value>On</ns2:value> </ns2:nvs> </ns7:parameterList>

Error
N/A

8.5.5 Resource Inventory Retrieval Interface

The WSDL document describing details of the interface can be accessed from the Appendix section.

8.5.5.1 *getInventory*

Description: This operation allows the user to get details about the inventory item queried for. The output contains the details of the physical inventory contained in the entity
This is a generic API that can be used to get information about different technology contents.
For Data Center entities, refer to the section on DataCenter
For getting information on MPLS-VPN entities, please refer to the section on MPLS-VPN

A set of generic input and output is shown in the tables below.

Input

Sl.No	Request parameter	Type	Description
1	MD	String	This is the Management Domain name.
2	ObjectType	String	A sample data would be “Cisco_DC”
3	Granularity	String	A Sample data would be “FULL”

Output
The output for getInventory will be different for different input arguments. The exact details of the output can be found under the respective sections as described in the description section of this API.
A Sample output for a Data Center operation is given below

Sl.No	Response parameter	Type	Description
1	dcNm	String	Data Center name in the following format: <VCenter Name>:-:<Data Center name>
2	Name	NamingAttributeType	RDN of Data Center
3	DM Specific Info	Alias	
3.1	aliasName	String	PN Instance Identifier
3.2	aliasValue	String	Identifier inside PN for the specific DataCenter instance
4	VendorExtension VCenter Information		
4.1	name	String	“Cisco_vCenter”
4.2	value	String	VCenter Name

Error
The specific errors for the Data Center and MPLS VPN are described under the respective sections.

8.5.6 Connection Retrieval Interface

This section describes the operations supported in the Connection Retrieval Interface.

8.5.6.1 *getSubnetworkConnection*

Description: This operation is used to get details about a subnetwork connection.

Input

Sl.No	Request parameter	Type	Description
1	getSubnetworkConnectionRequest	NamingAttributeType	The SNC information is given as input

Output

Sl. No	Response parameter	Type	Description
1	getSubnetworkConnectionResponse	getSubnetworkConnectionResponse	The detailed information about the queried SNC is returned. For details on the attributes, refer to NetworkResourceFullfilment/IIS/xsd/snc.xsd

Error
N/A

8.5.6.2 *getRoute*

Description: This operation is used to get details about the route for a particular subnetwork connection.

Input

Sl.No	Request parameter	Type	Description
1	getRouteRequest	NamingAttributeType	The name of the SNC is given as input

Output

Sl.No	Response parameter	Type	Description
1	getRouteResponse	getRouteResponse	The details of the route for the given SNC. For details on the attributes, refer to NetworkResourceFullfilment/IIS/xsd/Route.xsd

Error
N/A

8.5.7 Flow Domain Retrieval Interface

For explanation on the request and response for Flow Domains refer to the EVC section

8.5.7.1 *getFlowDomainFragment*

Description:This operation allows the user to get information about a Flow Domain fragment.

Input

Sl.No	Request parameter	Type	Description
1	getFlowDomainFragmentRequest	NamingAttributeType	The input to the request will be the Managed Domain and the FlowDomain Fragment to be queried

Output

Sl. No	Request parameter	Type	Description
1	getFlowDomainFragment Response	getFlowDomainFragment Response	The Details of specified Flow Domain Fragment. For Details on the attributes, refer to NetworkResourceFullfilment/IIS/ xsd/frfr.xsd

Error
N/A

8.5.7.2 *getFlowDomainFragmentRoute*

Description: This operation allows the user to get information about the Flow domain routes.

Input

Sl.No	Request parameter	Type	Description
1	getFlowDomainFragmentRouteRequest	NamingAttributeType	The Name of the Flow Domain FragmentRoute.

Output

Sl. No	Response parameter	Type	Description
1	getFlowDomainFragmentR outeResponse	getFlowDomainFragmentR outeResponse	Information about the flow Domian Fragment Route. For Details on the attributes, refer to

			NetworkResourceFullfilment/ IIS/xsd/frfr.xsd

Error
N/A

8.5.7.3 *getAllFlowDomainFragmentNames*

Description: This operation allows the user to get a list of Flow domain fragment names.

Input

Sl.No	Request parameter	Type	Description
1	getAllFlowDomainFragementNamesRequest	NamingAttributeType	This is the Management Domain name.

Output

Sl.No	Response parameter	Type	Description
1	getAllFlowDomainFragmentNamesResponse	getAllFlowDomainFragmentNamesResponse	This is the Management Domain name. The Response contains the names of the flow domain fragments in the domain.

Error
N/A

8.6 Ethernet Virtual Circuit

EVC resource retrieval is supported by these APIs:

- getFlowDomainFragment
- getFlowDomainFragmentRoute
- getAllFlowDomainFragmentNames

The WSDL document describing the details of the Interface can be accessed from the Appendix section.

More details of the interfaces and data type are described in these files below.

- ManagedResourceInventory/FlowDomainFragmentRetrieval wsdl file
- ManagedResourceInventory/FlowDomainFragmentRetrieval xsd file

The below table lists the APIs for the retrieval of Ethernet Virtual Connections (EVC). MTOSI Extension Points andExtensions are described below. Service topologies supported include point to point, multipoint to mulitpoint and point to multipoint (E-Tree).

8.6.1 Flow Domain Retrieval APIs

The table below gives a list of APIs support for Ethernet Virtual Circuit. The APIs currently supported deal with information retrieval for Ethernet Flow Domain.

Table 8-3: APIs for Retreiving EVC

API	Function	Extension Point and Extension
getFlowDomainFragment(…)	Retrieval of Flow Domain Fragment entities, CTP entity, and Matrix Flow Domain Fragment reference list. Upon success of this operation, EVC, service parameters, EFP and its parameters, and Forwarding reference list will be returned	Extension Points - • FlowDomainFragmentType->LayeredParametersType->LayerRateType • FlowDomainFragmentType->LayeredParametersType->vendorExtensions • FlowDomainFragmentType->TerminationPointDataListType->TerminationPointDataType->LayeredParametersType->vendorExtensions Extensions are defined in - • NetworkResourcesBasic/IIS/xsd/LayerRates.xsd • NetworkResourcesBasic/IIS/xsd/Cisco_CE_LayeredParam.xsd
getFlowDomainFragmentRoute(…)	Retrieval of Matrix Flow Domain Fragment. Upon success of this operation, EoMPLS Forwarding Entities including Ethernet PW edge instances/cross-connects and VFI when applicable will be returned.	Extension Points - • FlowDomainFragmentRouteType -> MatrixFlowDomainFragmentType ->LayeredParameterType->vendorExtensions • FlowDomainFragmentRouteType -> MatrixFlowDomainFragmentType->vendorExtensions Extensions are defined in NetworkResourcesBasic/IIS/xsd/Cisco_CE_LayeredParam.xsd
getAllFlowDomainFragmentNames(…)	Retrieval of names of all the managed Flow Domain Fragments . Upon success of this	This is a proprietory API introduced to facilitate the client to perform subsequent retrieval of a named Ethernet connection.

	operation, all Ethernet connection names will be returned.	

8.7 DataCenter

This section covers the details of the Datacenter inventory retrieval functionality. This functionality was implemented as part of getInventory operation defined in Resource Inventory Retrieval Interface.

Following are the datacenter inventory retrievals that are supported

- List all Available Virtual Data Centers in Prime Network
- List of Hosts (under a given datacenter)
- List of HostCluster (under a given datacenter)
- List of DataStore (under a given datacenter)
- List of VMs (includes only names under a vCenter)
- Details of aHost
- Details of a HostCluster
- Details of a DataStore
- Details of a VM

Interface Name	Description
getInventory	This API is used for Data Center inventory retrieval

NOTE: The above API supports VSM card in ASR 9K device.

The WSDL document describing the details of the Interface can be accessed from the Appendix section.

The various operations using getInventory request are give below:

8.7.1 List of all available data center names

Input to getInventory API:

Sl.No	Request parameter	Type	Description
1	MD	String	This is the Management Domain name.
2	ObjectType	String	The value expected is “Cisco_DC”
3	Granularity	String	The value expected is “FULL”

Output:

The output will contain all available data centers.

Some of the response parameters are explained below.

Sl.No	Response parameter	Type	Description
1	dcNm	String	Data Center name in the following format: <VCenter Name>:-:<Data Center name>
2	Name	NamingAttributeType	RDN of Data Center
3	DM Specific Info	Alias	
3.1	aliasName	String	PN Instance Identifier
3.2	aliasValue	String	Identifier inside PN for the specific DataCenter instance
4	VendorExtension VCenter Information		
4.1	name	String	"Cisco_vCenter"
4.2	value	String	VCenter Name

8.7.2 List of all available Host name from a particular Data center.

Input to getInventory API:

Sl.No	Request parameter	Type	Description
1	MD	String	Management Domain name.
2	Cisco_DC	String	The value for this should contain the DataCenter name as reported in response section of 8.7.1
3	ObjectType	String	The value expected is "Cisco_V_Host"
4	Granularity	String	The value expected is "NAME"

Output:

The output will contain list of host names. The parameters in response is explained below.

Response parameter	Type	Description
hostNm	String	Host server name.

8.7.3 Details of a particular host

Input to getInventory API:

Sl.No	Request parameter	Type	Description
1	MD	String	Management Domain name
2	Cisco_DC	String	The value for this should contain the DataCenter name as reported in response section of 8.7.1
3	Cisco_V_Host	String	The value for this parameter should contain the Host Server Name

4	ObjectType	String	The value expected is “Cisco_V_Host”
5	Granularity	String	The value expected is “FULL”

Output:

The output will contain full details of the given host

Some of the parameters in response are explained below.

Sl.No	Response parameter	Type	Description
1	hostNm	String	Host Server name.
2	Name	NamingAttributeType	RDN of Host Server
3	discoveredName	String	Host Server name
4	DMSpecificInfo	Alias	
4.1	aliasName	String	PN Instance Identifier
4.2	aliasValue	String	Identifier inside PN for the specific Host server instance
5	VendorExtension VCenter Information		
5.1	name	String	“Cisco_vCenter”
5.2	value	String	VCenter Name
6	description	String	
7	management_IP	String	IP Address of the Host server specified in the request
8	dnsName	String	
9	macAddress	String	
10	State	String	
11	softwareType	String	
12	softwareVersion	String	
13	Uuid	String	
14	dataStoreAllocation	CiscoVStoreAllocListType	Details of associated data stores
15	vNetwkIntfList	CiscoVNetwkTPListType	Detail of associated network interfaces
15	vMotionEnabled	boolean	
16	evcMode	String	
17	Model	String	Host Server model name
18	Vendor	String	Host Server vendor name
19	hypervisorProperty	CiscoVHypervisorType	
20	hostClusterRef	NamingAttributeType	RDN of Host Cluster in which the host is participating
21	faultToleranceVersion	String	
22	faultToleranceEnabled	Boolean	
23	processPower	CiscoVProcessingPwrType	

8.7.4 List of available Host cluster Name from a particular Data Center

Input to getInventory API:

Sl.No	Request parameter	Type	Description
1	MD	String	Management Domain name
2	Cisco_DC	String	The value for this should contain the DataCenter name as reported in response section of 8.7.1
4	ObjectType	String	The value expected is “Cisco_V_HostCluster”
5	Granularity	String	The value expected is “NAME”

Output:

The output will contain list of Host Clusters from a particular Data Center. The parameters in response is explained below.

Response parameter	Type	Description
hostClusterNm	String	Host Cluster name.

8.7.5 Detail information of a Host cluster

Input to getInventory API:

Sl.No	Request parameter	Type	Description
1	MD	String	Management Domain name
2	Cisco_DC	String	The value for this should contain the DataCenter name as reported in response section of 8.7.1
3	Cisco_V_HostCluster	String	The value for this parameter should contain the Host Cluster Name
4	ObjectType	String	The value expected is “Cisco_V_HostCluster”
5	Granularity	String	The value expected is “FULL”

Output:

Response will contain detailed information of requested Host Cluster
Some of the parameters are explained below.

Sl.No	Response parameter	Type	Description
1	hostClusterNm	String	Host Cluster name.
2	Name	NamingAttributeType	RDN of Host Cluster
3	discoveredName	String	Host Cluster name

4	DMSpecificInfo		
4.1	aliasName	String	PN Instance Identifier
4.2	aliasValue	String	Identifier inside PN for the specific Host Cluster instance
5	VendorExtension VCenter Information		
5.1	name	String	"Cisco_vCenter"
5.2	value	String	VCenter Name
6	State	String	
7	cpuAllocation	CiscoVRsrcAllocType	CPU allocation details
8	memoryAllocation	CiscoVRsrcAllocType	
9	isHaEnabled	Boolean	
10	isDrsEnabled	Boolean	
11	vmMigrationCount	int	
12	evcMotion	String	
13	isDpmEnabled	Boolean	

8.7.6 List of Data Store Name

Input to getInventory API:

Sl.No	Request parameter	Type	Description
1	MD	String	Management Domain name
2	Cisco_DC	String	The value for this should contain the DataCenter name as reported in response section of 8.7.1
3	ObjectType	String	The value expected is "Cisco_V_DataStore"
4	Granularity	String	The value expected is "NAME"

Output:

The output will contain list of all available Data Store names from a particular data center. The parameter is explained below.

Response parameter	Type	Description
dataStoreNm	String	This is the Data Store name.

8.7.7 Detailed information of a particular Data Store.

Input to getInventory API:

Sl.No	Request parameter	Type	Description
1	MD	String	Management Domain name

2	Cisco_DC	String	The value for this should contain the DataCenter name as reported in response section of 8.7.1
3	Cisco_V_DataStore	String	The value for this parameter should contain the Data Store Name
4	ObjectType	String	The value expected is "Cisco_V_DataStore"
5	Granularity	String	The value expected is "FULL"

Output:
Response will contain detailed information of requested Data Store. Some of the parameters are explained below.

Sl.No	Response parameter	Type	Description
1	dataStoreNm	String	Data Store name.
2	Name	NamingAttributeType	RDN of Data Store
3	discoveredName	String	Name of the data Store from the request
4	DMSpecificInfo		
4.1	aliasName	String	PN Instance Identifier
4.2	aliasValue	String	Identifier inside PN for the specific Data Store instance
5	VendorExtension VCenter Information		
5.1	name	String	"Cisco_vCenter"
5.2	value	String	VCenter Name
6	storeType	String	
7	storeLocation	String	
8	freeSpace	CiscoQuantityUnitType	
9	provisionedSpace	CiscoQuantityUnitType	
10	Capacity	CiscoQuantityUnitType	
11	isAccessible	String	
12	isMultiHostAccess	String	
13	Uuid	String	

8.7.8 List of available Virtual machine ID

Input to getInventory API:

Sl.No	Request parameter	Type	Description
1	MD	String	Management Domain name
2	Cisco_DC	String	The value for this should contain the DataCenter name as reported in response section of 8.7.1

4	ObjectType	String	The value expected is “Cisco_VM”
5	Granularity	String	The value expected is “NAME”

Output:

The output will contain list of all available virtual machine names from VCenter. The parameter is explained below.

Response parameter	Type	Description
vmNm	String	Virtual Machine Name

8.7.9 Detailed information of a particular data store

Input to getInventory API:

Sl.No	Request parameter	Type	Description
1	MD	String	This is the Management Domain name
2	Cisco_DC	String	The value for this should contain the DataCenter name as reported in response section of 8.7.1
3	Cisco_VM	String	The value for this parameter should contain the VM ID
4	ObjectType	String	The value expected is “Cisco_VM”
5	Granularity	String	The value expected is “FULL”

Output:

Response contains detailed information of the requested Virtual machine

Sl.No	Response parameter	Type	Description
1	Name	NamingAttributeType	RDN of Virtual machine
2	discoveredName	String	Virtual machine name
3	DMSpecificInfo		
3.1	aliasName	String	PN Instance Identifier
3.2	aliasValue	String	Identifier inside PN for the specific VM instance
4	VendorExtension VCenter Information		
4.1	name	String	“Cisco_vCenter”
4.2	value	String	VCenter Name
5	State	String	
6	productType	String	
7	softwareType	String	
8	softwareVersion	String	
9	cpuAllocation	CiscoVRsrcAllocType	
10	Uuid	String	
11	memoryAllocation	CiscoVRsrcAllocType	
12	dataStoreAllocation	CiscoVStoreAllocListType	Associated data store details
13	serviceId	String	

14	vmVersion	String	
15	virtualCPU	String	
16	minRequiredEVCMode	String	
17	supportingHostRef	NamingAttributeType	Host server RDN

8.8 L3 MPLS VPN

MPLS VPN functionality is supported as part of two mtosi interfaces.
Resource Inventory Retrieval Interface
Connection Retrieval Interface

Following is the flow to get MPLS inventory.

1- Execute getInventory operation(for exact inputs please check the below table) implemented as part of ResourceInventoryRetrieval Interface to get all the configured L3 MPLS-VPN names
2- Execute getSubNetworkConnection operation implemented as part of Connection Retrieval Interface to get the specific VPN details (for exact inputs please check the below table)
3- Execute getRoute operation implemented as part of Connection Retrieval interface to get the available route table entries for the specific VPN.

The WSDL document describing the details of the Interface can be accessed from the Appendix section.

8.8.1 Retrieving list of configured L3 MPLS-VPN names

Input to getInventory API:

Sl.No	Request parameter	Type	Description
1	MD	String	Management Domain name
2	ObjectType	String	The value expected is “SNC”
3	Granularity	String	The value expected is “NAME”

Output:
The output will contain list of all configured VPN IDs. The parameter is explained below.

Sl.No	Response parameter	Type	Description
1	sncNm	String	This contains the VPN Id Information. For example: {"dmIdentifier":"net://net:1","vpnId":"1"} where “net://net:1” is the DM Identifier and “1” is the VPN Id

MPLS/VPN attribute retrieval is supported by these APIs:

- getSubNetworkConnection
- getRoute

The WSDL document describing the details of the Interface can be accessed from the Appendix section.

8.8.2 Retrieving details of a VPN

Input to getSubNetworkConnection API:

Sl.No	Request parameter	Type	Description
1	MD	String	This is the Management Domain name
2	MLSN	String	This is Multi Layer SubNetwork
3	SNC	String	A VPN name as returned in the response section of 4.6.1.1

Output:

The output contains detailed information about a VPN. Some of the parameters are explained below.

Sl.No	Response parameter	Type	Description
1	Name	NamingAttributeType	RDN of SNC
2	discoveredName	String	VPN name
3	DMSpecificInfo		
3.1	aliasName	String	PN Instance Identifier
3.2	aliasValue	String	VPN Object ID
4	vendorExtensions		
4.1	Cisco_MPLS-VPNAttrName	CiscoMPLSVPNAttrNameType	MPLS VPN Naming Attribute Type
5	Direction	ConnectionDirectionType	The value is “CD_BI” i.e bi-directional
6	layerRate	LayerRateType	
7	aEndTpDataList	TerminationPointDataListType	
8	correlationIdentifier	String	
9	callName	String	
10	connectionId	String	

8.8.3 Retrieving route details

Input to getRoute API:

Sl.No	Request parameter	Type	Description
1	MD	String	Management Domain name
2	MLSN	String	This is Multi Layer SubNetwork

3	SNC	String	A VPN name as returned in the response section of 4.6.1.1

Output:
The output contains information related to route tables and enpoints.
Some of the parameters in the response are explained below:

Sl.No	Response parameter	Type	Description
1	Direction	ConnectionDirectionType	The value is “CD_BI” i.e bi-directional
2	aEndName	NamingAttributeType	RDN of Interfaces associated with VRF
3	connectionId	String	
4	vendorExtensions		
4.1	Cisco_MPLS-VPNRouteAttrName	CiscoMPLSVPNRouteAttrNameType	
4.1.1	VRF_Name	Naming attribute type	RDN of VRF
4.1.2	VRF_RouteTable	CiscoMPLSVPNRouteType	VRF Route table
4.1.3	DMSpecificInfo		
4.1.3.1	aliasName	String	PN Instance Identifier
4.1.3.2	aliasValue	String	Identifier inside PN for the specific VRF instance

8.9 Floating Termination Point

This functionality is implemented as part of getInventory operation defined in Resource Inventory Retrieval Interface.
The WSDL document describing the details of the Interface can be accessed from the Appendix section.

8.9.1 Retrieving details of all available port channels in a device

Input to getInventory API:

Sl.No	Request parameter	Type	Description
1	MD	String	Management Domain name
2	ME	String	Managed Element name
3	ObjectType	String	The value should be “FTP”
4	Granularity	String	The value should be “FULL”

Output:
The output will contain detailed information of all the available port channels in a device. Some of the parameters in the response are explained below:

Sl.No	Response parameter	Type	Description
1	ftpInv	FloatingTerminationPointInventoryType	
2	Name	NamingAttributeType	RDN of FTP
3	DM Specific Info		
3.1	aliasName	String	“PN_DM_OID”
3.2	aliasValue	String	Identifier inside PN for the specific DataLinkAggregation instance
4	vendorExtensions		
4.1	Cisco_FTP_AttrName	CiscoFTPAttrNameType	FTP Attribute Naming type
4.1.1	aggrProtocolType	CiscoFTPAggrProtocolEnumType	
4..1.2	adminState	CiscoFTPAdminStateEnumType	
4.1.3	bandwidth	String	
4.1.4	grpNumber	String	
4.1.5	memberIpAddrList	CiscoIPAddressListType	
4.1.6	macAddress	String	
4.1.7	ftpMemberList	PhysicalTerminationPointListType	List of PTP RDN
4.1.8	dot3adLacpAttrs	CiscoFTPLACPNameAttrType	

8.10 Gigabit Passive Optical Network

This section describes about the GPON inventory APIs. The below mentioned figure describes the modeling associated to a GPON NE (OLT) & connected ONU’s.

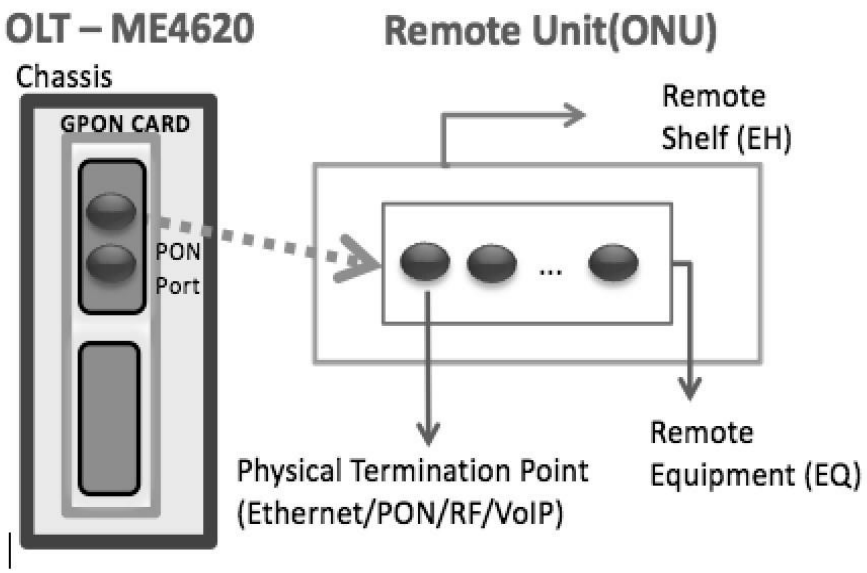

The GPON inventory retrieval functionality is implemented using the below operations:

a. getAllRemoteEquipmentByPTP – new operation added to Equipment Inventory Retrieval Interface – To retrieve the list of remote ONUs attached to a OLT GPON Port Specified in request.
b. getAllSupportedPhysicalTerminationPoints – existing operation under Physical Termination Point Retrieval Interface enhanced to retrieve the ports under a remote ONU. Ports Types retrieved are RF, GPON, Ethernet & VOIP.

Interface Name	Description
getAllRemoteEquipmentByPTP	This API is used for GPON remote unit(ONU) inventory retrieval

The WSDL document describing the details of the Interface can be accessed from the Appendix section.

8.10.1 List of all available GPON remote unit(ONU) details

Input to getAllRemoteEquipmentByPTP API:

The request will have the FDN of a port obtained from getAllSupportedPTP response for an OLT GPON card.

Sl.No	Request parameter	Type	Description
1	MD	String	Management Domain name
2	ME	String	Managed Element name
3	PTP	String	The ONU PTP FDN /rack=<chassisId>/slot=<SlotNo>/port=<ONU Port No>

			Sample: /rack=chassis/slot=3/port=gpon3/1

Output:
The response will contain all the ONU's that are connected to this OLT GPON Port. Only ME level information of the ONU will be modeled in response. And the remote units are modeled as shelves. The parameters in the response are explained below:

Sl.No	**Response parameter**	**Type**	**Description**
1	**EH**	Equipment Holder	MD= Management Domain name/ME = Management Element name/EH= remote_unit="'/rack=<chassisId>/slot=<SlotNo>/port=<ONU PortNo>'/shelf='<ONUId>'" Sample: MD=CISCO_PRIME/ME=GPON/EH=remote_unit="'/rack=chassis/slot=3/port=gpon3/1'/shelf='3/PON 1/1'"
1.1	DM Specific Info	Alias	
1.1.1	aliasName	String	PN Instance Identifier
1.1.2	aliasValue	String	ONU Object ID
1.2	resourceState	String	Operational state of ONU Possible Values: 1. “WORKING” 2. “NON_WORKING” 3. PLANNING 4. UNKNOWN
1.3	holderType	String	“remote_unit”
1.4	holderState	String	“UNKNOWN”
1.5	location	String	Location of GPON ONU
1.6	VendorExtension EquipmentHolder Information		
1.6.1	Cisco_EQH_softwareVersion	String	ONU Firmware Version
2	**EQ**	Equipment	MD= Management Domain name/ME = Management Element name/EH=

			remote_unit="'/rack=<chassisId>/slot=<SlotNo>/port=<ONU PortNo>'/shelf='<ONUId>'" EQ= <ONUId> Sample: MD=CISCO_PRIME/ME= GPON/EH= remote_unit="'/rack=chassis/slot=3/port=gpon3/1'/shelf='3/PON 1/1'"/EQ= 3/PON 1/1
2.5	userLabel	String	ONU Name
2.6	discoveredName	String	ONU Id
2.7	DM Specific Info	Alias	
2.7.1	aliasName	String	PN Instance Identifier
2.7.2	aliasValue		ONU Object ID in PN
2.8	VendorExtension Equipment Information		
2.8.1	Cisco_EQ_Description	String	ONU Description
2.9	installedEquipmentObjectType	String	"Cisco_GPON_ONU"
2.10	installedSerialNumber	String	ONU Serial Number
2.11	resouceFullfillmentState	String	Admin State of ONU Possible Values: 1. "IN_SERVICE" 2. "OUT_OF_SERVICE"
2.12	protectionRole	String	"UNKNOWN"
2.13	protectionSchema	String	"PSS_UNKNOWN"
2.14	installedVersion	String	ONU Hardware Version
2.15	owner	String	ONU Contact info

8.10.2 Physical Termination Point Retrieval Interface

Interface Name	Description
getAllSupportedPhysicalTerminationPoints	This API is used for retrieving a list of physical termination endpoints (PTP) of the specified equipment for GPON and of the ports under remote unit(ONU)

The WSDL document describing details of the Interface can be accessed from the Appendix section.

8.10.3 List of all supportedPTP of a Remote Unit(ONU)

Input to getAllSupportedPTP API for GPON ONU:
The request will be the FDN that identifies an individual ONU. This FDN hierarchy can be obtained from getAllRemoteEquipmentByPTP response explained above.

Sl.No	Request parameter	Type	Description
1	MD	String	Management Domain name
2	ME	String	Managed Element name
3	EH	String	remote_unit=<OLT GPON PTP RDN value>/shelf=<ONUId> Sample: remote_unit="'/rack=chassis/slot=3/port=gpon3/1'/shelf='3/PON 1/1'"
4	EQ	String	<OLT SlotNo>/ PON <ONU PortNo>/<ONU Id> Sample: 3/PON 1/1

Response:
The response lists the ports available for given ONU. The port types are:

- Ethernet
- VOIP
- RF and
- GPON

Not all port types will be available under every ONU, based on the profile associated to a particular ONU the applicable ports are displayed by PN and thereby this API. The parameters in the response are explained below:

Sl.No	Response parameter	Type	Description
1	**Ethernet**		Details of Ethernet port MD= Management Domain name/ME= OLT GPON Device Name/PTP= remote_unit="'/rack=<chassisId>/slot=<Slot No>/port=<ONU PortNo>'/shelf='<ONUId>'"/port= <ONU Etheret Po rt Id>

			Sample: MD=CISCO_PRIME/ME= GPON/PTP= remote_unit="'/rack=chassis/slot=3/port=gpon3/1'/shelf='3/PON 1/1'"/port= Eth 4
1.1	DM Specific Info	Alias	
1.1.1	aliasName	String	PN Instance Identifier
1.1.2	aliasValue	String	ONU PTP Object ID
1.2	resourceState	String	"UNKNOWN"
1.3	VendorExtension ONU PTP Information		
1.3.1	Cisco_PTP_portType	String	"Ethernet"
1.3.2	Cisco_PTP_Admin_State	String	Admin State of ONU Ethernet port Possible Values: 1. WORKING 2. NON_WORKING 3. UNKNOWN
1.3.3	Cisco_PTP_Line_Rate	String	Line Rate of ONU Ethernet Cable Possible Values: 1. 10.0 Mbps 2. 100.0 Mbps 3. 1000.Mbps
1.4	transmissionParameterList		
1.4.1	LayerRate	LayerRateType	LayerRate of ONU Ethernet Possible Values: 1. LR_Ethernet 2. LR_DSR_Fast_Ethernet 3. LR_DSR_Gigabit_Ethernet
2	**PON**	String	Details of PON port MD= Management Domain name/ME= OLT GPON Device Name/PTP= remote_unit="'/rack=<chassisId>/slot=<Slot No>/port=<ONU

			PortNo>'/shelf='<ONUId>'"/port= <ONU PON Port Id> Sample: MD=CISCO_PRIME/ME= GPON/PTP= remote_unit="'/rack=chassis/slot=3/port=gpon3/1'/shelf='3/PON 1/1'"/port= PON 1
2.1	DM Specific Info	Alias	
2.1.1	aliasName	String	PN Instance Identifier
2.1.2	aliasValue	String	ONU PTP Object ID
2.2	resourceState	String	"UNKNOWN"
2.3	VendorExtension ONU PTP Information		
2.3.1	Cisco_PTP_portType	String	"PON"
2.3.2	Cisco_PTP_Admin_State	String	Admin state of GPON ONU PON port Possible Values: 1. WORKING 2. NON_WORKING 3. UNKNOWN
2.4	transmissionParameterList		
2.4.1	LayerRate	LayerRateType	"Cisco_LR_GPON_Gigabit_ITU"
3	**RF**	String	Details of RF port Details of PON port MD= Management Domain name/ME= OLT GPON Device Name/PTP= remote_unit="'/rack=<chassisId>/slot=<Slot No>/port=<ONU PortNo>'/shelf='<ONUId>'"/port= <ONU RF Port Id> Sample: MD=CISCO_PRIME/ME= GPON/PTP= remote_unit="'/rack=chassis/slot=3/port=gpon3/1'/shelf='3/PON 1/1'"/port= RF 1
3.1	DM Specific Info	Alias	
3.1.1	aliasName	String	PN Instance Identifier

3.1.2	aliasValue	String	ONU PTP Object ID
3.2	resourceState	String	Operational state of ONU RF port Possible Values: 1. WORKING 2. NON_WORKING 3. UNKNOWN
3.3	VendorExtension ONU PTP Information		
3.3.1	Cisco_PTP_portType	String	"RF"
3.3.2	Cisco_PTP_Admin_State	String	Admin state of ONU RF port Possible Values: 1. WORKING 2. NON_WORKING 3. UNKNOWN
3.4	transmissionParameterList		
3.4.1	LayerRate	LayerRateType	"LR_Not_Applicable"
4	**VoIP**	String	Details of VoIP port MD= Management Domain name/ME= OLT GPON Device Name/PTP= remote_unit="'/rack=<chassisId>/slot=<Slot No>/port=<ONU PortNo>'/shelf='<ONUId>'"/port= <ONU VoIP Port Id> Sample: MD=CISCO_PRIME/ME= GPON/PTP= remote_unit="'/rack=chassis/slot=3/port=gpon3/1'/shelf='3/PON 1/1'"/port= VoIP 1
4.1	DM Specific Info	Alias	
4.1.1	aliasName	String	PN Instance Identifier
4.1.2	aliasValue	String	ONU PTP Object ID
4.2	resourceState	String	"UNKNOWN"
4.6	VendorExtension ONU PTP Information		
4.6.1	Cisco_PTP_portType	String	"VoIP"

4.6.2	Cisco_PTP_Admin_State	String	Admin state of ONU VoIP port Possible Values: 1. WORKING 2. NON_WORKING 3. UNKNOWN
4.7	transmissionParameterList		
4.7.1	LayerRate	LayerRateType	"LR_Not_Applicable"

8.10.4 Inventory Notification

The Integration Layer (IL) will expose interfaces for enabling clients of the IL to register and receive notifications of interest. The currently supported IL interfaces consist of the following:

- WS-SOAP interface that supports MTOSI-conformant operations
- JMS interface that supports the same MTOSI operations using serialized Java objects

The IL notification framework should be based on the above interfaces. This entails the following:

- Support the MTOSI-style notification topic registration pattern for the WS-SOAP interface:
- SubscribeResponse subscribe
  (Holder<Header> mtopHeader,
  SubscribeRequest mtopBody) throws SubscribeException;
- UnsubscribeResponse unsubscribe
  (Holder<Header> mtopHeader,
  UnsubscribeRequest mtopBody) throws UnsubscribeException;

The subscribe request specifies the following:

- Consumer - URI
- Topic - The string indicating the classification of events of interest
- Selector - Notification Filter

The subscribe response contains a subscriptionID. The unsubscribe request requires the subscriptionID(s) and topic(s) provided at the time of registration.Support for standard JMS topic subscription for the JMS interface.

On the notification consumer side, each client type (WS-SOAP or JMS) is expected to support a slightly different flow.

WS-SOAP clients will need to perform the following

- Expose the NotificationConsumer API as defined by the NotificationConsumerHttp.wsdl and documented in the MTOSI R2.0 Framework DDP
- Use the Subscribe operation to register for notifications.

JMS clients will be consuming POJOs with the following format.
ArrayList<Object> consisting of following in this order:

1. com.cisco.prime.esb.fmw.api.Header
2. org.tmforum.mtop.fmw.xsd.notmsg.v1.Notify

For Prime 1.0, the supported notification types will include:

- Object Creation Notification
- Object Deletion Notification
- Attribute Value Change Notification

8.10.4.1 VRF related Notifications

Consumers who have subscribed to the "INVENTORY_NOTIFICATIONS" topic will receive notifications related to VRF under the following circumstances

- Whenever a VRF gets added
- Whenever a VRF gets added
- Whenever a CTP gets associated with a VRF
- Whenever a CTP gets dissociated with a VRF
- Whenever the IP Address of the CTP changes

The following table gives a quick overview about the information received for the supported notifications. Only the important attributes are detailed in the table below.

Operation	Notification Type	ObjectType attribute value	Object Name(FDN)	Type of Object sent in Notification

VRF Addition	Object Creation	Cisco_V_Route	**HINTS**= TIME:<Date in seconds format>;DMLIST:<comURI> **MD**=CISCO_PRIME **ME**=<ME Name> **MLSN**=Prime Network **Cisco_V_Route**=<VRF Name>	ObjectCreationType. Cisco_routeList
VRF Deletion	Object Deletion	Cisco_V_Route	**HINTS**= TIME:<Date in seconds format>;DMLIST:<comURI> **MD**=CISCO_PRIME **ME**=<ME Name> **MLSN**=Prime Network **Cisco_V_Route**=<VRF Name>	NA
IP Interface(Site) Association with a VRF	Object Creation	CTP	**HINTS**= TIME:<Date in seconds format>;DMLIST:<comURI> **MD**=CISCO_PRIME **ME**=<ME Name> **CTP**=<CTP Name>	ObjectCreationType.object Contained Object: *8.10.4.1.1.1.1 ctp*
IP Interface(Site) Disassociation with a VRF	Object Deletion.	CTP	**HINTS**= TIME:<Date in seconds format>;DMLIST:<comURI> **MD**=CISCO_PRIME **ME**=<ME Name> **CTP**=<CTP Name>	NA
IP Interface(Site) Changes	Attribute Value Change	CTP	**HINTS**= TIME:<Date in seconds format>;DMLIST:<comURI> **MD**=CISCO_PRIME **ME**=<ME Name> **CTP**=<CTP Name>	ObjectCreationType.object Contained Object: *8.10.4.1.1.1.2 ctp*

8.10.4.2 Datacenter Logical Inventory related Notifications

Consumers who have subscribed to the "INVENTORY_NOTIFICATIONS" topic will receive notifications for the following changes in DataCenter logical Inventory.

Logical Inventory Type	Change	Notification Type
Host	Addition of a Host	Object Creation
	Deletion of a Host	Object Deletion
	Changes in Host	Attribute value Change
	Changes in HostHypervisor	Attribute Value Change
	Changes in HostProcessor	Attribute Value Change
	Changes in HostCPUCapacityProvision	Attribute Value Change
	Changes in HostDiskCapacityProvision	Attribute Value Change
	Changes in HostMemoryCapacityProvision	Attribute Value Change
	Association of a Virtual Network Entity to a Host	Object Creation
	Dis-association of a Virtual Network Entity to a Host	Object Deletion
	Changes in Host Virtual Network Entity	Attribute Value Change

	Association of a Data Store with a Host	Object Creation
	Dis-association of a Data Store with a Host	Object Creation
	Changes in the Data Store Associated with the Host	Attribute Value Change
Virtual Machine	Migration of Virtual Machine to a new Host/ Addition of a new Virtual Machine under a Host	Object Creation
	Disassociation of a Virtual Machine with Host	Object Deletion
	Changes in Virtual Machine	Attribute Value Change
	Changes in VMMemoryCapacityAllocation	Attribute Value Change
	Changes in of a VMCPUCapacityAllocation	Attribute Value Change
	Association of a Virtual Network Entity with a Virtual Machine	Object Creation
	Dis-association of a Virtual Network Entity with a Virtual Machine	Object Deletion
	Changes in Virtual Machine Virtual network entity	Attribute Value Change
	Association of a Data Store with a Virtual Machine	Object Creation
	Dis-association of a Data Store with a Virtual Machine	Object Creation
	Changes in the Data Store Associated with the Virtual Machine	Attribute Value Change
Host Cluster	Addition of a Host Cluster	Object Creation
	Deletion of a Host Cluster	Object Deletion
	Changes in Host Cluster	Attribute Value Change
	Changes in HostClusterCPUCapacityProvision	Attribute Value Change
	Changes in HostClusterDiskCapacityProvision	Attribute Value Change
	Changes in HostClusterMemoryCapacityProvision	Attribute Value Change
Data Store	Addition of a new Data Store	Object Creation
	Deleteion of a Data Store	Object Deletion
	Changes in the DataStore	Attribute Value Change

The following table gives a quick overview about the information received for the supported notifications. Only the important attributes are detailed here.

Operation	Notification Type	ObjectType attribute value	Object Name(FDN)	Type of Object sent in Notification
Addition of a Host	Object Creation	Cisco_V_Host	**HINTS**= TIME:<Date in seconds format>;DMLIST:<comURI> **MD**=CISCO_PRIME **Cisco_DC=**<ME Name>:-:<DC Name> **Cisco_V_Host**=<Host Name>	ObjectCreationType. Cisco_hostList
Deletion of a Host	Object Deletion	Cisco_V_Host	**HINTS**= TIME:<Date in seconds format>;DMLIST:<comURI> **MD**=CISCO_PRIME **Cisco_DC=**<ME Name>:-:<DC Name> **Cisco_V_Host**=<Host Name>	NA
Changes in Host	Attribute value Change	Cisco_V_Host	**HINTS**= TIME:<Date in seconds format>;DMLIST:<comURI> **MD**=CISCO_PRIME **Cisco_DC=**<ME Name>:-:<DC Name> **Cisco_V_Host**=<Host Name>	AttributeValueChangeType. Cisco_hostList
Changes in HostHypervisor	Attribute Value Change	Cisco_V_Host	**HINTS**= TIME:<Date in seconds format>;DMLIST:<comURI> **MD**=CISCO_PRIME **Cisco_DC=**<ME Name>:-:<DC Name> **Cisco_V_Host**=<Host Name>	AttributeValueChangeType. Cisco_hostList
Changes in HostProcessor	Attribute Value Change	Cisco_V_Host	**HINTS**= TIME:<Date in seconds format>;DMLIST:<comURI> **MD**=CISCO_PRIME **Cisco_DC=**<ME Name>:-:<DC Name> **Cisco_V_Host**=<Host Name>	AttributeValueChangeType. Cisco_hostList
Changes in HostCPUCapacity Provision	Attribute Value Change	Cisco_V_Host	**HINTS**=TIME:<Date in seconds format>;DMLIST:<comURI> **MD**=CISCO_PRIME **Cisco_DC=**<ME Name>:-:<DC Name> **Cisco_V_Host**=<Host Name>	AttributeValueChangeType. Cisco_hostList
Changes in HostDiskCapacity Provision	Attribute Value Change	Cisco_V_Host	**HINTS**=TIME:<Date in seconds format>;DMLIST:<comURI> **MD**=CISCO_PRIME **Cisco_DC=**<ME Name>:-:<DC Name> **Cisco_V_Host**=<Host Name>	AttributeValueChangeType. Cisco_hostList
Changes in HostMemoryCapacityProvision	Attribute Value Change	Cisco_V_Host	**HINTS**=TIME:<Date in seconds format>;DMLIST:<comURI> **MD**=CISCO_PRIME **Cisco_DC=**<ME Name>:-:<DC Name> **Cisco_V_Host**=<Host Name>	AttributeValueChangeType. Cisco_hostList

Association of a Virtual Network Entity to a Host	Object Creation	Cisco_V_networkTP	**HINTS**=TIME:<Date in seconds format>;DMLIST:<comURI> **MD**=CISCO_PRIME **Cisco_DC=**<ME Name>:-:<DC Name> **Cisco_V_Host**=<Host Name> **Cisco_V_networkTP=<**Virtual Network Entity Name>	ObjectCreationType.object Contained object: Cisco_V_NetworkTPType
Dis-association of a Virtual Network Entity to a Host	Object Deletion	Cisco_V_networkTP	**HINTS**=TIME:<Date in seconds format>;DMLIST:<comURI> **MD**=CISCO_PRIME **Cisco_DC=**<ME Name>:-:<DC Name> **Cisco_V_Host**=<Host Name> **Cisco_V_networkTP=<**Virtual Network Entity Name>	NA
Changes in Host Virtual Network Entity	Attribute Value Change	Cisco_V_networkTP	**HINTS**=TIME:<Date in seconds format>;DMLIST:<comURI> **MD**=CISCO_PRIME **Cisco_DC=**<ME Name>:-:<DC Name> **Cisco_V_Host**=<Host Name> **Cisco_V_networkTP=<**Virtual Network Entity Name>	AttributeValueChangeType. attributeList Contained object: Cisco_V_NetworkTPType
Association of a Data Store with a Host	Object Creation	Cisco_V_dataStoreAllocation	**HINTS**=TIME:<Date in seconds format>;DMLIST:<comURI> **MD**=CISCO_PRIME **Cisco_DC=**<ME Name>:-:<DC Name> **Cisco_V_Host**=<Host Name> **Cisco_V_dataStoreAllocation=<** Allocated Datastore Name>	ObjectCreationType.object Contained object: Cisco_V_StoreAllocType
Dis-association of a Data Store with a Host	Object Creation	Cisco_V_dataStoreAllocation	**HINTS**=TIME:<Date in seconds format>;DMLIST:<comURI> **MD**=CISCO_PRIME **Cisco_DC=**<ME Name>:-:<DC Name> **Cisco_V_Host**=<Host Name> **Cisco_V_dataStoreAllocation=<** Allocated Datastore Name>	NA
Changes in the Data Store Associated with the Host	Attribute Value Change	Cisco_V_dataStoreAllocation	**HINTS**=TIME:<Date in seconds format>;DMLIST:<comURI> **MD**=CISCO_PRIME **Cisco_DC=**<ME Name>:-:<DC Name> **Cisco_V_Host**=<Host Name> **Cisco_V_dataStoreAllocation=<** Allocated Datastore Name>	AttributeValueChangeType. attributeList Contained object: Cisco_V_StoreAllocType
Migration of Virtual Machine to a new Host/	Object Creation	Cisco_VM	**HINTS**=TIME:<Date in seconds format>;DMLIST:<comURI> **MD**=CISCO_PRIME **Cisco_DC=**<ME Name>	ObjectCreationType.Cisco_vMList

Addition of a new Virtual Machine under a Host			**Cisco_VM=<**VM ID**>**	
Disassociation of a Virtual Machine with Host	Object Deletion	Cisco_VM	**HINTS**=TIME:<Date in seconds format>;DMLIST:<comURI> **MD**=CISCO_PRIME **Cisco_DC=**<ME Name> **Cisco_VM=<**VM ID**>**	NA
Changes in Virtual Machine	Attribute Value Change	Cisco_VM	**HINTS**=TIME:<Date in seconds format>;DMLIST:<comURI> **MD**=CISCO_PRIME **Cisco_DC=**<ME Name> **Cisco_VM=<**VM ID**>**	AttributeValueChangeType. Cisco_vMList
Changes in VMMemoryCapacityAllocation	Attribute Value Change	Cisco_VM	**HINTS**=TIME:<Date in seconds format>;DMLIST:<comURI> **MD**=CISCO_PRIME **Cisco_DC=**<ME Name> **Cisco_VM=<**VM ID**>**	AttributeValueChangeType. Cisco_vMList
Changes in of a VMCPUCapacityAllocation	Attribute Value Change	Cisco_VM	**HINTS**=TIME:<Date in seconds format>;DMLIST:<comURI> **MD**=CISCO_PRIME **Cisco_DC=**<ME Name> **Cisco_VM=<**VM ID**>**	AttributeValueChangeType. Cisco_vMList
Association of a Virtual Network Entity with a Virtual Machine	Object Creation	Cisco_V_networkTP	**HINTS**=TIME:<Date in seconds format>;DMLIST:<comURI> **MD**=CISCO_PRIME **Cisco_DC=**<ME Name>:-:<DC Name> **Cisco_VM=<**VM ID**>** **Cisco_V_networkTP=<**Virtual Network Entity Name>	ObjectCreationType.object Contained object: Cisco_V_StoreAllocType
Dis-association of a Virtual Network Entity with a Virtual Machine	Object Deletion	Cisco_V_networkTP	**HINTS**=TIME:<Date in seconds format>;DMLIST:<comURI> **MD**=CISCO_PRIME **Cisco_DC=**<ME Name>:-:<DC Name> **Cisco_VM=<**VM ID**>** **Cisco_V_networkTP=<**Virtual Network Entity Name>	NA
Changes in Virtual Machine Virtual network entity	Attribute Value Change	Cisco_V_networkTP	**HINTS**=TIME:<Date in seconds format>;DMLIST:<comURI> **MD**=CISCO_PRIME **Cisco_DC=**<ME Name>:-:<DC Name> **Cisco_VM=<**VM ID**>** **Cisco_V_networkTP=<**Virtual Network Entity Name>	AttributeValueChangeType. attributeList Contained object: Cisco_V_StoreAllocType
Association of a Data Store with a Virtual Machine	Object Creation	Cisco_V_dataStoreAllocation	**HINTS**=TIME:<Date in seconds format>;DMLIST:<comURI> **MD**=CISCO_PRIME	ObjectCreationType.object Contained object: Cisco_V_StoreAllocType

			Cisco_DC=<ME Name>:-:<DC Name> **Cisco_VM=<**VM ID**>** **Cisco_V_dataStoreAllocation=<**Allocated Datastore Name>	
Dis-association of a Data Store with a Virtual Machine	Object Creation	Cisco_V_dataStoreAllocation	**HINTS**=TIME:<Date in seconds format>;DMLIST:<comURI> **MD**=CISCO_PRIME **Cisco_DC=**<ME Name>:-:<DC Name> **Cisco_VM=<**VM ID**>** **Cisco_V_dataStoreAllocation=<**Allocated Datastore Name>	NA
Addition of a Host Cluster	Object Creation	Cisco_V_HostCluster	**HINTS**=TIME:<Date in seconds format>;DMLIST:<comURI> **MD**=CISCO_PRIME **Cisco_DC=**<ME Name>:-:<DC Name> **Cisco_V_HostCluster=<**Host Cluster Name>	ObjectCreationType.Cisco_hostClusterList
Deletion of a Host Cluster	Object Deletion	Cisco_V_HostCluster	**HINTS**=TIME:<Date in seconds format>;DMLIST:<comURI> **MD**=CISCO_PRIME **Cisco_DC=**<ME Name>:-:<DC Name> **Cisco_V_HostCluster=<**Host Cluster Name>	NA
Changes in Host Cluster	Attribute Value Change	Cisco_V_HostCluster	H **HINTS**=TIME:<Date in seconds format>;DMLIST:<comURI> **MD**=CISCO_PRIME **Cisco_DC=**<ME Name>:-:<DC Name> **Cisco_V_HostCluster=<**Host Cluster Name>	AttributeValueChangeType.Cisco_hostClusterList
Changes in HostClusterCPUCapacityProvision	Attribute Value Change	Cisco_V_HostCluster	**HINTS**=TIME:<Date in seconds format>;DMLIST:<comURI> **MD**=CISCO_PRIME **Cisco_DC=**<ME Name>:-:<DC Name> **Cisco_V_HostCluster=<**Host Cluster Name>	AttributeValueChangeType.Cisco_hostClusterList
Changes in HostClusterDiskCapacityProvision	Attribute Value Change	Cisco_V_HostCluster	**HINTS**=TIME:<Date in seconds format>;DMLIST:<comURI> **MD**=CISCO_PRIME **Cisco_DC=**<ME Name>:-:<DC Name> **Cisco_V_HostCluster=<**Host Cluster Name>	AttributeValueChangeType.Cisco_hostClusterList
Changes in HostClusterMemoryCapacityProvision	Attribute Value Change	Cisco_V_HostCluster	**HINTS**=TIME:<Date in seconds format>;DMLIST:<comURI> **MD**=CISCO_PRIME	AttributeValueChangeType.Cisco_hostClusterList

			Cisco_DC=<ME Name>:-:<DC Name> **Cisco_V_HostCluster=<**Host Cluster Name>	
Addition of a new Data Store	Object Creation	Cisco_V_DataStore	**HINTS**=TIME:<Date in seconds format>;DMLIST:<comURI> **MD**=CISCO_PRIME **Cisco_DC=**<ME Name>:-:<DC Name> **Cisco_V_DataStore=<**Datastore Name>	AttributeValueChangeType. Cisco_dataStoreList
Deleteion of a Data Store	Object Deletion	Cisco_V_DataStore	H **HINTS**=TIME:<Date in seconds format>;DMLIST:<comURI> **MD**=CISCO_PRIME **Cisco_DC=**<ME Name>:-:<DC Name> **Cisco_V_DataStore=<**Datastore Name>	NA
Changes in the DataStore	Attribute Value Change	Cisco_V_DataStore	**HINTS**=TIME:<Date in seconds format>;DMLIST:<comURI> **MD**=CISCO_PRIME **Cisco_DC=**<ME Name>:-:<DC Name> **Cisco_V_DataStore=<**Datastore Name>	AttributeValueChangeType. Cisco_dataStoreList

8.10.4.3 *Gigabit Passive Optical Network(GPON) related Notification*

Consumers who have subscribed to the “INVENTORY_NOTIFICATIONS” topic will receive notifications for the following changes in Gigabit Passive Optical Network Physical Inventory.

The following table gives a quick overview about the information received for the supported notifications.

Operation	Notification Type	ObjectType attribute value	Object Name(FDN)	Description of Notification
ONU Addition	Object Creation	ONT	HINTS= TIME:<Date in seconds format>;DMLIST:<comURI> MD=CISCO_PRIME ME=<ME Name> EH = remote_unit="'/rack=<chassisId>/slot=<Slot No>/port=<ONU PortNo>'/shelf='<ONUId>'" aliasName= PN Instance Identifier aliasValue = ONU Object Id resourceState= ONU operational state holderType= remote_unit holderState = UNKNOWN HINTS= TIME:<Date in seconds format>;DMLIST:<comURI> MD=CISCO_PRIME ME=<ME Name> EH = remote_unit="'/rack=<chassisId>/slot=<Slot No>/port=<ONU PortNo>'/shelf='<ONUId>'" EQ = <GPON OLT Slot No>/<ONU PortNo> PON/<ONU Id> discoveredName= ONU Id aliasName= <PN Instance Identifier> aliasValue = <ONU Object Id> vendorExtension installedEquipmentObject = Cisco_GPON_ONU installedSerialNumber= <ONU Serail No> resourceFulfillmentState= <ONU Admin State> protectionRole= UNKNOWN protectionSchemeState= PSS_UNKNOWN	Notification for the Remote Equipment(ONU) addition
ONU Port Addition	Object Creation	ONT	HINTS= TIME:<Date in seconds format>;DMLIST:<comURI> MD=CISCO_PRIME ME=<ME Name> PTP= remote_unit="'/rack=<chassisId>/slot=<Slot No>/port=<ONU PortNo>'/shelf='<ONUId>'"/port = <ONU Ethernet/RF/PON/VoIP PortId> aliasName= PN Instance Identifier aliasValue = ONU Object Id	Notification for the Remote Equipment's(ONU) ports (Ethernet/PON/RF/VoIP) addition

			vendorExtension Cisco_PTP_portType = Ethernet/RF/PON/VoIP Cisco_PTP_Admin_State= <Ethernet/RF/PON/VoIP port of ONU's Admin State> layerRate = <layerRate of Ethernet/RF/PON/VoIP port of ONU> For Ethernet Port: Cisco_PTP_Line_Rate= <Line rate of ONU Ethernet port>	
ONU Deletion	Object Deletion	ONT	HINTS= TIME:<Date in seconds format>;DMLIST:<comURI> MD=CISCO_PRIME ME=<ME Name> EH = remote_unit="'/rack=<chassisId>/slot=<Slot No>/port=<ONU PortNo>'/shelf='<ONUId>'" EQ =<ONU RDN Value>	Notification for the Remote Equipment(ONU) deletion
ONU Firmware Information	Attribute Value Change	ONT	**HINTS**= TIME:<Date in seconds format>;DMLIST:<comURI> **MD**=CISCO_PRIME **ME**=<ME Name> **EH** = remote_unit="'/rack=<chassisId>/slot=<SlotNo>/port=<ONU PortNo>'/shelf='<ONUId>'" **vendorExtension** **Cisco_EQH_softwareVersion**= <ONU Firmware Version> **holderType**= remote_unit	Notification for the Remote Equipment's(ONU) firmware(software version) information
Change Location of ONU	Attribute Value Change	ONT	HINTS= TIME:<Date in seconds format>;DMLIST:<comURI> MD=CISCO_PRIME ME=<ME Name> EH = remote_unit="'/rack=<chassisId>/slot=<Slot No>/port=<ONU PortNo>'/shelf='<ONUId>'" aliasName= PN Instance Identifier aliasValue = <ONU Object Id> holderType= remote_unit holderState = UNKNOWN location = <ONU Port Location>	Notification for the Remote Equipment's(ONU) location change information

Change Serial No of ONU	Attribute Value Change	ONT	HINTS= TIME:<Date in seconds format>;DMLIST:<comURI> MD=CISCO_PRIME ME=<ME Name> EH = remote_unit="'/rack=<chassisId>/slot=<Slot No>/port=<ONU PortNo>'/shelf='<ONUId>'" EQ = <GPON OLT Slot No>/<ONU PortNo> PON/<ONU Id> aliasName= <PN Instance Identifier> aliasValue = <ONU Object Id> vendorExtension installedEquipmentObject = Cisco_GPON_ONU installedSerialNumber= <ONU Serail No> protectionRole= UNKNOWN protectionSchemeState= PSS_UNKNOWN	Notification for the Remote Equipment's (ONU) Serial No Change information

ONU State Change	Attribute Value Change	ONT	HINTS= TIME:<Date in seconds format>;DMLIST:<comURI> MD=CISCO_PRIME ME=<ME Name> EH = remote_unit="'/rack=<chassisId>/slot=<SlotNo>/port=<ONU PortNo>'/shelf='<ONUId>'" EQ = <GPON OLT Slot No>/<ONU PortNo> PON/<ONU Id> aliasName= <PN Instance Identifier> aliasValue = <ONU Object Id> vendorExtension installedEquipmentObject = Cisco_GPON_ONU resourceFulfillmentState= <ONU Admin State> protectionRole= UNKNOWN protectionSchemeState= PSS_UNKNOWN HINTS= TIME:<Date in seconds format>;DMLIST:<comURI> MD=CISCO_PRIME ME=<ME Name> EH = remote_unit="'/rack=<chassisId>/slot=<SlotNo>/port=<ONU PortNo>'/shelf='<ONUId>'" aliasName= PN Instance Identifier aliasValue =< ONU Object Id>	Notification for the Remote Equipment's(ONU) State Change information

			resourceState=< ONU Operational state> holderType= remote_unit holderState = UNKNOWN	

GPON OLT Pluggable Removed	Attribute Value Change	Pluggable Transceiver	HINTS= TIME:<Date in seconds format>;DMLIST:<comURI> MD=CISCO_PRIME ME=<ME Name> EH = <Chassis No> EH = <Slot No> EQ = <Pluggable Port No> resourceFulfillmentState= <Pluggable Port Plug-out State>	Notification for the Transceivers state
		ONT	HINTS= TIME:<Date in seconds format>;DMLIST:<comURI> MD=CISCO_PRIME ME=<ME Name> EH = remote_unit="'/rack=<chassisId>/slot=<SlotNo>/port=<ONU PortNo>'/shelf='<ONUId>'" aliasName= PN Instance Identifier aliasValue =< ONU Object Id> resourceState= Non Working holderType= remote_unit holderState = UNKNOWN	Notification for the Remote Equipment's(ONU) State Change to "NON_WORKING"

GPON OLT Pluggable Plug-in	Attribute Value Change	Pluggable Transceiver	HINTS= TIME:<Date in seconds format>;DMLIST:<comURI> MD=CISCO_PRIME ME=<ME Name> EH = <Chassis No> EH = <Slot No> EQ = <Pluggable Port No> resourceFulfillmentState= <Pluggable Port Plug-in State> installedSerialNumber= <Connector Serial No> <vendorExtension> Cisco_EQ_PID = <Pluggable Transceiver Pid> Cisco_EQ_Description = <Connector port Description>	Notification for the Transceivers state
		ONT	HINTS= TIME:<Date in seconds format>;DMLIST:<comURI> MD=CISCO_PRIME ME=<ME Name> EH = remote_unit="'/rack=<chassisId>/slot=<SlotNo>/port=<ONU PortNo>'/shelf='<ONUId>'" aliasName= PN Instance Identifier aliasValue =< ONU Object Id> resourceState= WORKING holderType= remote_unit	Notification for the Remote Equipment's(ONU) State Change to WORKING

			holderState = UNKNOWN	

8.11 Delta Inventory Management

Delta Inventory provides a facility to retrieve all Managed Elements whose physical inventory has changed since a specified time.

8.11.1 Managed Element Names Retrieval Interface details

Interface Name	Description
getAllManagedElementNamesTS	This API is used for delta inventory management

getAllManagedElementNamesTS API is used for Delta Inventory Management.

The WSDL document describing the details of the Interface can be accessed from the Appendix section.

8.11.1.1 *Get Delta Inventory changes*

To get the list of Managed Elemets whose inventory has changed, the **getAllManagedElementNamesTS** request needs to be issued with <timestamp> value in UTC Format.
The response will contain a list of all managed elements which have been added, deleted or modified since the time specified in the request. Explaining one such entry from the response here.

Input to getAllManagedElementNamesTS for get delta inventory changes :

Request parameter	Type	Description
Timestamp	Date	Valid time in UTC Format i.e "**dd-MMM-yyyy HH:mm:ss**" For example: **2013-02-28T14:15:30**

Output:

Sl.No	Response parameter	Type	Description
1	name	String	Name of the ME
2	timestamp	Date	Last inventory updated time
3	operation	OperationType	Type of change in the ME i.e ADD, DELETE or UPDATE
4	Hints	String	Current time in millis followed by comURI

Error:

Condition	Error
Blank value in <timestamp> tag -or- Incorrect format in <timestamp> tag -or- Empty timestamp tag <timestamp/>	Umarshalling Error

8.11.1.2 *startTrackingDelta Inventory*

NOTE: This API is deprecated from PN 4.1 onwards. The Start Tracking procedure will be performed by the Prime Network Integration Layer during its initialization phase.
The API description is provided here for users who want to use an older version for integration.

To start tracking Inventory changes, **getAllManagedElementNamesTS** request has to be issued without <timestamp> tag.

The response contains a message, regarding the outcome of Start Tracking Delta Inventory Request, in addition to the list of Managed Elements. From this point on, any physical inventory changes to the Managed Elements will be tracked.

Input to getAllManagedElementNamesTS for start tracking inventory changes :

Request parameter	Type	Description
Nil	NA	No parameters needed to initiate Start tracking inventory changes

Output:

Sl.No	Response parameter	Type	Description
1	Name	String	Name of the ME
2	Operation	OperationType	Type of change on the Managed Element. This value will be set to “UNKNOWN” in this response as this is the initial request to list all Managed Elements
3	Hints	String	Contains current time in millis followed by comURI
4	Status	String	Contains the status of the Start Tracking Inventory changes request. On success the status displayed is: “Start Tracking Executed successfully” On failure, the status displayed is: “Start Tracking Execution failed.”

NOTE: Any failure in sending the Start Tracking request will not stop this API from listing devices. However the **status** label will clearly capture the information that start tracking failed.

NOTE: The explicit request to start delta inventory tracking is not required from PN version 4.1. The tracking is started internally when the Prime Network Integration Layer starts.

Sl.No	Scenario	Result
1	Prime Network restarts	If a Prime Network restarts,then all the Managed Elements will be shown as dirty i.e "**UPDATE"** in the **operation** field in response.
2	When there are no changes after Start Tracking was initiated -or- When Start Tracking procedureitself has failed	The response will contain the message "No changes detected or Start tracking not issued."

8.12 MTOSI Standard Compliance

Cisco MTOSI Information Model is designed to conform to MTOSI 2.0 specifications. Cisco reference implementation extensions are introduced to support proprietary APIs and name space as per Cisco Prime Release requirements. Refer to the MTOSI standards in the link: http://www.tmforum.org/MultiTechnologyOperations/2319/home.html

8.13 Trouble Shooting - MTOSI

The below table includes the issues that might be encountered while setting up OSS integration layer and steps to troubleshoot the problem.

Table 8-4: OSS Integration Problems and Troubleshooting Procedure

Problem Description	Indication	Probable Cause	Troubleshooting Procedure
Web Services Security Exception	Web Service call to any of the Interfaces will throw a WS Security exception with authentication failure message	The user ID / password provided for the web service call might not be correct.	Use a proper User ID / password for the web services call.

No DMs Available Exception	Exception message from the Web Service call, stating that no DMs are available.	The communication to PN is not proper. The Integration layer was not able to communicate with the domain manager (DM).	• Verify that the Prime Networks application is running. • Network Connectivity to the Prime Networks machine is proper.
getManagedElement returns a SOAP Exception	A call to getManagedElement returns a Web Services exception stating that the device is not in up-state though it is actually up.	The device name specified in request is incorrect	Cross check the device name in getManagedElements response and correct if device is not in up state
Delta Inventory: Not receiving delta inventory change notifications.	Notifications are not received if there is an inventory change.	If PN-IL is in standlone mode and if the OSS user is not subscribed for the notifications.	Subscribe for the notifications on MTOSI Notification Producer Web Service.

9 Cisco Specific Interfaces

This section describes the Cisco specific extensions provided in addition to the standard APIs.

- Cisco Specific Vendor APIs are provided for the following functional areas:
  - Alarm Life Cycle Management
  - Alarm Retrieval

For a sample SOAP Request and Response for all the APIs defined in these interfaces, refer the Prime Network OSS Integration Guide SOAP Request Response document on Cisco Developer Network.

9.1 Cisco Specific Interfaces and supported APIs

This sections gives a list of Cisco specific extensions provided to the MTOSI interface.

Sl.No	Interface Name	API Name	Cisco Extenson
1	**AlarmIRP**	**AcknowlegeAlarm**	**Y**
2		**DeAcknowledgeAlarm**	**Y**
3		**AddNote**	**Y**
4		**Retire**	**Y**
5		**Clear**	**Y**

6	**AlarmRetrieval**	**getSubtentingAlarms**	**Y**

9.2 Alarm Life Cycle Management

The alarm life cycle management support allows any OSS user to perform the following operations on any Prime Network Ticket. All the following operations are synchronous in nature

- Acknowledge
- De-Acknowledge
- Clear
- Retire
- AddNote

The WSDL document describing the details of the Interface can be accessed from the Appendix section.

The following table lists the Alarm Life Cycle actions supported by PrimeNetwork.

DM/**Operation**	**Ack**	**DeAck**	**Clear**	**AddNote**	**Retire**
PN	√	√	√	√	√

9.2.1 AlarmMgmt::Acknowlege

Add compliance for all the APIs.

Description:
This API is used to acknowledge a Prime Network Ticket.

Input:

Sl.No	Parameter	Data Type	Description
1	uniqueId	String	This parameter describes the Prime Network Ticket ID. This ID could be an integer or of format {[NewAlarm(Id=X)]}
2	Hint	String	Optional value that can be used as extra meta data in processing the requests. For example, OSS application or FM can use this as a timestamp/version/state value that can be used to correlate actions to avoid issues with concurrent actions performed on a Prime Network Ticket.
3	Note	String	Optional note to include while performing the operation.

4	Username	String	Optional attribute. The user on behalf of whom the operation is done.

Output:

Sl.No	Parameter	Data Type	Description
1	uniqueId	String	The same value which is used in the operation.
2	Hint	String	The same value which is used in the operation.
3	Success	Boolean	Value denoting the result of the operation - “true” in case of success.

Error:

Sl.No	Condition	Error
1	Invalid ID provided for the operation in StandAlone Integration layer deployment.	When user provides improper ticketId (not in expected format), the operation will return soap fault with the detail containing the alarmApiException. The alarmApiException code will be API_ERROR and message will contain the information: Please enter the PN Ticket Number or OID(format: [NewAlarm(Id=<Ticket Number>)]
2	Ticket does not exist on the PrimeNetwork.	The operation will return soap fault with the detail containing the alarmApiException. The alarmApiException code will be API_ERROR and message will contain the information: DM[**<comURI>**]=>Message[API_ERROR:**<Operation Name>** operation failed. Reason: **<DM_Error_Message>**] where: *9.2.1.1.1.1.1* ***<Operation Name>:*** the operation name, e.g. Acknowledge *9.2.1.1.1.1.2* ***<comURI>:*** the comURI of the responding DM *9.2.1.1.1.1.3* ***<DM_Error_Message>:*** the error message returned by DM.

9.2.2 AlarmMgmt::De-Acknowlege

Description:

This API is used to de-acknowledge a Prime Network Ticket.

Input:

Sl.No	Parameter	Data Type	Description
1	uniqueId	String	This parameter describes the Prime Network Ticket ID.

			This ID could be an integer or of format {[NewAlarm(Id=X)]}
2	Hint	String	Optional value that can be used as extra meta data in processing the requests. For example, OSS application or FM can use this as a timestamp/version/state value that can be used to correlate actions to avoid issues with concurrent actions performed on a Prime Network Ticket.
3	Note	String	Optional note to include while performing the operation.
4	Username	String	Optional attribute. The user on behalf of whom the de-acknowledge operation is done.

Output:

Sl.No	Parameter	Data Type	Description
1	uniqueId	String	The same value which is used in the operation.
2	Hint	String	The same value which is used in the operation.
3	Success	Boolean	Value denoting the result of the operation - “true” in case of success.

Error:

Sl.No	Condition	Error
1	Invalid ID provided for the operation in StandAlone Integration layer deployment.	When user provides improper ticketId (not in expected format), the operation will return soap fault with the detail containing the alarmApiException. The alarmApiException code will be API_ERROR and message will contain the information: Please enter the PN Ticket Number or OID(format: [NewAlarm(Id=<Ticket Number>)]
2	Ticket does not exist on the PrimeNetwork.	The operation will return soap fault with the detail containing the alarmApiException. The alarmApiException code will be API_ERROR and message will contain the information: DM[**<comURI>**]=>Message[API_ERROR:**<Operation Name>** operation failed. Reason: **<DM_Error_Message>**] where: **<Operation Name>:** *the operation name, e.g. Acknowledge*

		<comURI>: *the comURI of the responding DM* **<DM_Error_Message>:** *the error message returned by DM.*

9.2.3 AlarmMgmt::Clear

Description:

This API is used to force clear a Prime Network Ticket.

Input:

Sl.No	Parameter	Data Type	Description
1	uniqueId	String	This parameter describes the Prime Network Ticket ID. This ID could be an integer or of format {[NewAlarm(Id=X)]}
2	Hint	String	Optional value that can be used as extra meta data in processing the requests. For example, OSS application or FM can use this as a timestamp/version/state value that can be used to correlate actions to avoid issues with concurrent actions performed on a Prime Network Ticket.
3	Note	String	Optional note to include while performing the operation.
4	Username	String	Optional attribute. The user on behalf of whom the operation is done.

Output:

Sl.No	Parameter	Data Type	Description
1	uniqueId	String	The same value which is used in the operation.
2	Hint	String	The same value which is used in the operation.
3	Success	boolean	Value denoting the result of the operation - “true” in case of success.

Error:

Sl.No	Condition	Error
1	Invalid ID provided for the operation in StandAlone Integration layer deployment.	When user provides improper ticketId (not in expected format), the operation will return soap fault with the detail containing the alarmApiException. The alarmApiException code will be API_ERROR and message will contain the information:

		Please enter the PN Ticket Number or OID(format: [NewAlarm(Id=<Ticket Number>)]
2	Ticket does not exist on the PrimeNetwork.	The operation will return soap fault with the detail containing the alarmApiException. The alarmApiException code will be API_ERROR and message will contain the information: DM[**<comURI>**]=>Message[API_ERROR:**<Operation Name>** operation failed. Reason: **<DM_Error_Message>**] where: **<Operation Name>:** *the operation name, e.g. Acknowledge* **<comURI>:** *the comURI of the responding DM* **<DM_Error_Message>:** *the error message returned by DM.*

9.2.4 AlarmMgmt::Retire

Description:

This API is used to retire(archive) a Prime Network Ticket.

Input:

Sl.No	Parameter	Data Type	Description
1	uniqueId	String	This parameter describes the prime network ticket ID. This ID could be an integer or of format {[NewAlarm(Id=X)]}
2	Hint	String	Optional value that can be used as extra meta data in processing the requests. For example, OSS application or FM can use this as a timestamp/version/state value that can be used to correlate actions to avoid issues with concurrent actions performed on an Prime Network Ticket.
3	Username	String	Optional attribute. The user on behalf of whom the operation is done.

Output:

Sl.No	Parameter	Data Type	Description
1	uniqueId	String	The same value which is used in the operation.
2	Hint	String	The same value which is used in the operation.

3	Success	boolean	Value denoting the result of the operation - “true” in case of success.

Error:

Sl.No	Condition	Error
1	Invalid ID provided for the operation in StandAlone Integration layer deployment.	When user provides improper ticketId (not in expected format), the operation will return soap fault with the detail containing the alarmApiException. The alarmApiException code will be API_ERROR and message will contain the information: Please enter the PN Ticket Number or OID(format: [NewAlarm(Id=<Ticket Number>)]
2	Ticket does not exist on the PrimeNetwork.	The operation will return soap fault with the detail containing the alarmApiException. The alarmApiException code will be API_ERROR and message will contain the information: DM[**<comURI>**]=>Message[API_ERROR:**<Operation Name>** operation failed. Reason: **<DM_Error_Message>**] where: **<Operation Name>:** *the operation name, e.g. Acknowledge* **<comURI>:** *the comURI of the responding DM* **<DM_Error_Message>:** *the error message returned by DM.*

9.2.5 AlarmMgmt::Add Note

Description:

This API is used to add a note to a Prime Network Ticket.

Input:

Sl.No	Parameter	Data Type	Description
1	uniqueId	String	This parameter describes the Prime Network Ticket ID. This ID could be an integer or of format {[NewAlarm(Id=X)]}
2	Hint	String	Optional value that can be used as extra meta data in processing the requests. For example, OSS application or FM can use this as a timestamp/version/state value that can be used to correlate actions to avoid issues with concurrent actions

			performed on an Prime Network Ticket.
3	Note	String	The mandatory note which is to be added to the Prime Network Ticket.
4	Username	String	Optional attribute. The user on behalf of whom the operation is done.

Output:

Sl.No	Parameter	Data Type	Description
1	uniqueId	String	The same value which is used in the operation.
2	Hint	String	The same value which is used in the operation.
3	Success	Boolean	Value denoting the result of the operation - “true” in case of success.

Error:

Sl.No	Condition	Error
1	Invalid ID provided for the operation in StandAlone Integration layer deployment.	When user provides improper ticketId (not in expected format), the operation will return soap fault with the detail containing the alarmApiException. The alarmApiException code will be API_ERROR and message will contain the information: Please enter the PN Ticket Number or OID(format: [NewAlarm(Id=<Ticket Number>)]
2	Ticket does not exist on the PrimeNetwork.	The operation will return soap fault with the detail containing the alarmApiException. The alarmApiException code will be API_ERROR and message will contain the information: DM[**<comURI>**]=>Message[API_ERROR:**<Operation Name>** operation failed. Reason: **<DM_Error_Message>**] where: **<Operation Name>:** *the operation name, e.g. Acknowledge* **<comURI>:** *the comURI of the responding DM* **<DM_Error_Message>:** *the error message returned by DM.*

9.3 Alarm Retrieval

This is a vendor extension API provided to retrieve any alarms.

The WSDL document describing the details of the Interface can be accessed from the Appendix section.

9.3.1 AlarmRetrieval::getsubtendingEvents

This API allows the user to get all subtending events for an Alarm or a Ticket in PrimeNetwork.

Description:
This API is used to list all subtending events associated with an Alarm or a Ticket in Prime Network .

Input :

Parameter	Data Type	Description
uniqueId	String	This parameter describes the Prime Network Ticket ID. This ID could be an integer or of format {[NewAlarm(Id=X)]}

Output:

Sl.No	Parameter	Data Type	Description
1	eventId	String	This gives the PN event id for the input ticket provided by user.
2	correlationId	String	This refers to the alarmId to which the event is associated with.
3	Description	String	This gives the description of the event.
4	Source	String	Identifier of the model object that is the root cause of the event
5	duplicationCount	String	The duplication count as it is calculated by the VNE. This count is meaningful for flapping events and represents the total number of non-cleared events that are aggregated by this flapping event.
6	Severity	String	The severeness of the event in the system. Severity enumeration (Indeterminate, Information, Cleared, Warning, Minor, Major , Critical)
7	Timestamp	String	This gives the origin timestamp of the event.
8	Archived	String	Indicates whether this event is archived in the database of Prime Network.
9	ElementTypeA	String	The brand name of the device this network event is associated with.

10	ElementTypeZ	String	In case of a link, will return the Z size element type.
11	DetectionType	String	Represents the way this event was detected. Possible Values: service, syslogs, trap v1/v2/v3
12	extendedName	String	This value can be used to distinct between event types defined outside Prime Network, In external OSS systems such as PPM which forward events to Prime Network.
13	State	String	The event state is a short, textual description of Name field (defined in send-alarm-msg-util.xml)
14	suppressionDisplay	String	Indicates whether this event should be displayed in the GUI
15	Name	String	Event's type enumeration. For example: Link down, Port up, Login etc.
16	reductionCount	String	The reduction count as it is calculated by the VNE. This count is meaningful for flapping events and represents the total number of events that are aggregated by this flapping event.
17	creationInDeviceTimezone	String	A human readable string representing the event creation time in the device timezone

Error:

Sl.No	Condition	Error
1	Improper TicketID	When user provides improper ticketId (not in expected format), below error will be shown. Id provided is invalid. Please enter the PN Ticket Number or OID(format: [NewAlarm(Id=<Ticket Number>)]
2	TicketID does not exist	If user provided ticketId does not exist in PrimeNetwork, below errorwill be shown, GetSubtendingEvents operation failed. Reason: ERROR (1200000006): OID doesn't exist
3	Too many events to be processed	If the ticketID provided by the user has 10,000 events associated with it, an error will be thrown like, GetSubtendingEvents operation failed. Reason:Too many events to be processed for the Ticket.

9.4 Trouble Shooting – Cisco Specific Interfaces

The table below includes the issues that might be encountered while setting up OSS integration layer and steps to troubleshoot the problem.

Table 9-1: OSS Integration Problems and Troubleshooting Procedures for Cisco Specific Interfaces

Problem Description	Indication	Probable Cause	Troubleshooting Procedure
Web Services Security Exception	Web Service call to any of the Interfaces will throw a WS Security exception with authentication failure message	The user ID / password provided for the web service call might not be correct.	Use a proper User ID / password for the web services call.
No DMs Available Exception	Exception message from the Web Service call, stating that no DMs are available.	The communication to PN is not proper. The Integration layer was not able to communicate with the domain manager (DM).	• Verify that the Prime Networks application is running. • Network Connectivity to the Prime Networks machine is proper.
Subtending Alarms: Exception indicating too many events.	Exception message: Reason:Too many events to be processed for the Ticket	There are too many events associated with the Alarm ID/Ticket ID supplied.	• The number of events assoiated with the Alarm/Ticket is more than 10K.

10 Appendix I – References to WSDL Documents

10.1 3GPP WSDL Documents

This section contains references to the following WSDL Documents:

- 3GPP Inventory WSDL
- 3GPP FT IRP WSDL
- 3GPP Alarm IRP WSDL
- 3GPP Notification IRP WSDL
- 3GPP Notification Consumer WSDL

10.2 3GPP Inventory WSDL

The WSDL for 3GPP Inventory Management IRP can be accessed from the following URL:

https://<server>:<tgppPort>/ TGPPInventoryIRP_RPC ?wsdl
Where:
server –is the hostname or IP address of Prime Central or Prime Network Server
tgppPort – is the port number where CXF service for TGPP is running. By default port number is 9220.

10.3 3GPP FT IRP WSDL

The WSDL for 3GPP File Transfer IRP can be accessed from the following URL:

https://<server>:<tgppPort>/ TGPPFileTransferIRP_RPC?wsdl
Where:
server –is the hostname or IP address of Prime Central or Prime Network Server
tgppPort – is the port number where CXF service for TGPP is running. By default port number is 9220.

10.4 3GPP Alarm IRP WSDL

The WSDL for 3GPP Alarm IRP can be accessed from the following URL:

https://<server>:<tgppPort>/TGPPAlarmIRPServices?wsdl
Where:
server –is the hostname or IP address of Prime Central or Prime Network Server
tgppPort – is the port number where CXF service for TGPP is running. By default port number is 9220.

Supported API's :

NotifyNewAlarm
NotifyClearedAlarm
NotifyAckStateChanged

NotifyUpdateAlarm
acknowledgeAlarms
GetAlarmList
unacknowledgeAlarms
setComment
clearAlarms

10.5 3GPP Notification IRP WSDL

The WSDL for 3GPP File Transfer IRP can be accessed from the following URL:

https://<server>:<tgppPort>/TGPPNotificationIRP_RPC?wsdl

Where:
server –is the hostname or IP address of Prime Central or Prime Network Server
tgppPort – is the port number where CXF service for TGPP is running. By default port number is 9220.

Supported API's :

subscribe
unsubscribe
getSubscriptionIds
getNotificationCategories

10.6 3GPP Notification Consumer WSDL

This WSDL will be used by the Notification Consumer (OSS) to receive 3GPP Notifications.
This WSDL does not support any operation and is provided for the OSS client user to download the WSDL.
The WSDL for 3GPP File Transfer IRP can be accessed from the following URL:

https://<server>:<tgppPort>/TGPPNotificationIRP_Consumer?wsdl
Where:
server –is the hostname or IP address of Prime Central or Prime Network Server
tgppPort – is the port number where CXF service for TGPP is running. By default port number is 9220.

10.7 3GPP CS IRP WSDL

The WSDL for 3GPP CS IRP can be accessed from the following URL:

https://<server>:<tgppPort>/TGPPCSIRPServices?wsdl

Where:
server –is the hostname or IP address of Prime Central or Prime Network Server
tgppPort – is the port number where CXF service for TGPP is running. By default port number is 9220.

Supported API's :

setHeartbeatPeriod
getHeartbeatPeriod
NotifyHeartbeat

10.8 MTOSI WSDL Documents

This section contains references to the following WSDL Documents:

- Managed Element Retrieval WSDL
- Managed Element Names Retrieval WSDL
- Equipment Inventory Retrieval WSDL
- Termination Point Retrieval WSDL
- Resource Inventory Retrieval WSDL
- Connection Retrieval WSDL
- Ethernet Virtual Connection (EVC) Resource Retrieval WSDL

10.9 Managed Element Retrieval WSDL

The WSDL documents can be obtained by following URL

https://<server>:< mtosiPort>/ManagedElementRetrieval_RPC?wsdl
https://<server>:<mtosiport>/ ManagedElementNamesRetrieval_RPC?wsdl
Where:
server- is the hostname or IP address of Prime Central or Prime Network Server
mtosiPort - is the port number where the mtosi service is running. By default port number is 9110.

10.10 Managed Element Names Retrieval WSDL

The WSDL document can be obtained from the following URL

https://<server>:<mtosiPort>/ManagedElementNamesRetrieval_RPC?wsdl
Where:
server- is the hostname or IP address of Prime Central or Prime Network Server
mtosiPort - is the port number where the mtosi service is running. By default port number is 9110.

10.11 Equipment Inventory Retrieval WSDL

WSDL document can be obtained by following URL

https://<server>:<mtosiPort>/ EquipmentInventoryRetrieval_RPC?wsdl
Where:
server- is the hostname or IP address of Prime Central or Prime Network Server
mtosiPort - is the port number where the mtosi service is running. By default port number is 9110.

10.12 Termination Point Retrieval WSDL

The WSDL document can be obtained by following URL

https://<server>:<mtosiPort>/ TerminationPointRetrieval_RPC?wsdl
Where:
server- is the hostname or IP address of Prime Central or Prime Network Server
mtosiPort - is the port number where the mtosi service is running. By default port number is 9110.

10.13 Resource Inventory Retrieval WSDL

The WSDL document can be obtained by following URL

https://<server>:<mtosiPort>/ResourceInventoryRetrieval_RPC?wsdl
Where:
server –is the hostname or IP address of Prime Central or Prime Network Server
mtosiPort – is the port number where CXF service for MTOSI is running. By default port number is 9110.

10.14 Connection Retrieval WSDL

The WSDL document can be obtained by following URL

https://<server>:<mtosiPort>/ConnectionRetrievalRPC?wsdl
Where:
server –is the hostname or IP address of Prime Central or Prime Network Server
mtosiPort – is the port number where CXF service for MTOSI is running. By default port number is 9110

10.15 Ethernet Virtual Connection (EVC) Resource Retrieval WSDL

The WSDL document can be obtained by following URL

https://<server>:<mtosiPort>/FlowDomainRetrievalRPC?wsdl
Where:
server–is the hostname or IP address of Prime Central or Prime Network Server

mtosiPort – is the port number where CXF service for MTOSI is running. By default port number is 9110

10.16 Cisco Specific Extensions WSDL Documents

This section has references to the following WSDL Documents:

- Alarm Life Cycle Management WSDL
- Alarm Retrieval Management WSDL

10.17 Alarm Life Cycle Management WSDL

The WSDL for Alarm Life Cycle management Interface can be accessed from the following URL:

https://<server>:<alarmMgmtPort>/AlarmManagementAPI?wsdl
Where:
server - is the hostname or IP address of Prime Central or Prime Network Server where the Web Service is running.
alarmMgmtPort – is the port number where CXF service for Alarm Mgmt API is running. By default port number is 9020.

10.18 Alarm Retrieval Management WSDL

The WSDL for Alarm Retrieval interface can be accessed from the following URL:

https://<server>:<alarmMgmtPort>/AlarmRetrievalAPI?wsdl
Where:
server - is the hostname or IP address of Prime Central or Prime Network Server where the Web Service is running.
alarmMgmtPort – is the port number where CXF service for Alarm Mgmt API is running. By default port number is 9020.

11 Appendix II – 3GPP-Miscellaneous

This section includes:

- 3GPP inventoryNrm Schema File
- 3GPP Inventory File
- 3GPP Detailed Inventory Information
- 3GPP Status File
- 3GPP Notifications
- FTP Configuration

11.1 3GPP inventoryNrm Schema File

```
<?xml version="1.0" encoding="UTF-8"?>

<!--
  3GPP TS 32.696 Inventory Management NRM IRP
  Inventory data file NRM-specific XML schema
  inventoryNrm.xsd
-->

<schema
  targetNamespace=
"http://www.3gpp.org/ftp/specs/archive/32_series/32.696#inventoryNrm"
  elementFormDefault="qualified"
  xmlns="http://www.w3.org/2001/XMLSchema"
  xmlns:xn=
"http://www.3gpp.org/ftp/specs/archive/32_series/32.626#genericNrm"
  xmlns:in=
"http://www.3gpp.org/ftp/specs/archive/32_series/32.696#inventoryNrm"
>

<import
schemaLocation="../../../ConfigurationManagement/GenericNetworkResourcesIR
P/SolutionSet/xsd/genericNrm.xsd"
    namespace=
"http://www.3gpp.org/ftp/specs/archive/32_series/32.626#genericNrm"
  />

<!-- Inventory Management Alternative 1 NRM IRP NRM class associated XML
elements -->
<simpleType name="eightOctetsType">
<restriction base="hexBinary">
<length value="8"/>
</restriction>
</simpleType>
<simpleType name="fourOctetsType">
<restriction base="hexBinary">
<length value="4"/>
</restriction>
</simpleType>
<simpleType name="angleValueType">
<restriction base="short">
<minInclusive value="0"/>
```

```
<maxInclusive value="3600"/>
</restriction>
</simpleType>

<element
    name="InventoryUnit"
substitutionGroup="xn:ManagedElementOptionallyContainedNrmClass"
>
<complexType>
<complexContent>
<extension base="xn:NrmClass">
<sequence>
<element
             name="attributes"
             minOccurs="0">
<complexType>
<all>
<element
                    name="inventoryUnitType"
                    type="string"
                  />
<element
                    name="vendorUnitFamilyType"
                    type="string"
                    minOccurs="0"
                  />
<element
                    name="vendorUnitTypeNumber"
                    type="string"
                    minOccurs="0"
                  />
<element
                    name="vendorName"
                    type="string"/>
<element
                    name="serialNumber"
                    type="string"
                    minOccurs="0"/>
<element
                    name="dateOfManufacture"
                    type="date"
                    minOccurs="0"/>
<element
                    name="dateOfLastService"
                    type="date"
                    minOccurs="0"/>
<element
                    name="unitPosition"
                    type="string"
                    minOccurs="0"/>
<element
                    name="manufacturerData"
                    type="string"
                    minOccurs="0"/>
<element
                    name="versionNumber"
```

```
                    type="string"
                    minOccurs="0"/>
<element name="relatedFunction" type="xn:dn" minOccurs="0"/>
</all>
</complexType>
</element>
<element ref="xn:ManagedFunction" minOccurs="0"/>
<choice minOccurs="0" maxOccurs="unbounded">
<element ref="in:InventoryUnit"/>
<element ref="xn:VsDataContainer"/>
<element ref="in:TmaInventoryUnit"/>
<element ref="in:AntennaInventoryUnit"/>
</choice>
</sequence>
</extension>
</complexContent>
</complexType>
</element>
<element name="TmaInventoryUnit"
substitutionGroup="xn:ManagedElementOptionallyContainedNrmClass">
<complexType>
<complexContent>
<extension base="xn:NrmClass">
<sequence>
<element name="attributes" minOccurs="0">
<complexType>
<all>
<!-- Inherited attributes from InventoryUnit-->
<element name="inventoryUnitType" type="string"/>
<element name="vendorUnitFamilyType" type="string" minOccurs="0"/>
<element name="vendorUnitTypeNumber" type="string" minOccurs="0"/>
<element name="vendorName" type="string"/>
<element name="serialNumber" type="string" minOccurs="0"/>
<element name="dateOfManufacture" type="date" minOccurs="0"/>
<element name="dateOfLastService" type="date" minOccurs="0"/>
<element name="unitPosition" type="string" minOccurs="0"/>
<element name="manufacturerData" type="string" minOccurs="0"/>
<element name="versionNumber" type="string" minOccurs="0"/>
<element name="relatedFunction" type="xn:dn" minOccurs="0"/>
<!-- End of inherited attributes from InventoryUnit -->
<element name="tmaNumberOfNonLinearGainValues" type="short"
minOccurs="0"/>
<element name="tmaNonLinearGainValue" type="short" minOccurs="0"/>
<element name="tmaAdditionalDataFieldNumber" type="short" minOccurs="0"/>
<element name="tmaAntennaModelNumber" type="string" minOccurs="0"/>
<element name="tmaAntennaOperatingBands" type="short" minOccurs="0"/>
<element name="tmaBeamwidthForEachOpBandInBandOrder"
type="in:eightOctetsType" minOccurs="0"/>
<element name="tmaGainForEachOpBandInBandOrder" type="in:fourOctetsType"
minOccurs="0"/>
<element name="tmaInstallationDate" type="string" minOccurs="0"/>
<element name="tmaInstallersId" type="string" minOccurs="0"/>
<element name="tmaMaxSupportedGain" type="short" minOccurs="0"/>
<element name="tmaMinSupportedGain" type="short" minOccurs="0"/>
</all>
</complexType>
```

```
</element>
<choice minOccurs="0" maxOccurs="unbounded">
<element ref="in:InventoryUnit"/>
<element ref="xn:VsDataContainer"/>
</choice>
</sequence>
</extension>
</complexContent>
</complexType>
</element>
<element name="AntennaInventoryUnit"
substitutionGroup="xn:ManagedElementOptionallyContainedNrmClass">
<complexType>
<complexContent>
<extension base="xn:NrmClass">
<sequence>
<element name="attributes" minOccurs="0">
<complexType>
<all>
<!-- Inherited attributes from InventoryUnit-->
<element name="inventoryUnitType" type="string"/>
<element name="vendorUnitFamilyType" type="string" minOccurs="0"/>
<element name="vendorUnitTypeNumber" type="string" minOccurs="0"/>
<element name="vendorName" type="string"/>
<element name="serialNumber" type="string" minOccurs="0"/>
<element name="dateOfManufacture" type="date" minOccurs="0"/>
<element name="dateOfLastService" type="date" minOccurs="0"/>
<element name="unitPosition" type="string" minOccurs="0"/>
<element name="manufacturerData" type="string" minOccurs="0"/>
<element name="versionNumber" type="string" minOccurs="0"/>
<element name="relatedFunction" type="xn:dn" minOccurs="0"/>
<!-- End of inherited attributes from InventoryUnit-->
<element name="maxTiltValue" type="in:angleValueType" minOccurs="0"/>
<element name="minTiltValue" type="in:angleValueType" minOccurs="0"/>
<element name="mechanicalOffset" type="in:angleValueType" minOccurs="0"/>
<element name="baseElevation" type="integer" minOccurs="0"/>
<element name="latitude" type="decimal" minOccurs="0"/>
<element name="longitude" type="decimal" minOccurs="0"/>
<element name="patternLabel" type="string" minOccurs="0"/>
</all>
</complexType>
</element>
<choice minOccurs="0" maxOccurs="unbounded">
<element ref="in:InventoryUnit"/>
<element ref="xn:VsDataContainer"/>
</choice>
</sequence>
</extension>
</complexContent>
</complexType>
</element>
</schema>
```

11.2 3GPP Inventory File

A Sample inventory file is given here

```
IM_20120808_1005+0300_32767_10.86.66.35_10002.xml
```

Where :
IM – Indicates the management type
20120808 – Date of creation
32767–File expiry time in hours
10.86.66.35 – Name of the device
10002 – Running serial number (RC)

11.2.1 3GPP Inventory File Contents

The inventory file contains physical and logical inventory information. A sample inventory file containing inventory data is given here:

```
<?xml version="1.0" encoding="UTF-8" standalone="yes"?>
<?xml-stylesheet type="text/xsl" href="InventoryXSLT.xsl"?>
<InventoryUnit
xmlns:ns2="http://www.3gpp.org/ftp/specs/archive/32_series/32.626#genericN
rm"
xmlns="http://www.3gpp.org/ftp/specs/archive/32_series/32.696#inventoryNrm
" xmlns:ns4="CiscoTgppInvCommon" xmlns:ns3="CiscoSpecificGGSNNameSpace"
xmlns:ns9="http://www.3gpp.org/ftp/specs/archive/32_series/32.526#sonPolic
yNrm"
xmlns:ns5="http://www.3gpp.org/ftp/specs/archive/32_series/32.755#epcNrm"
xmlns:ns6="http://www.3gpp.org/ftp/specs/archive/32_series/32.636#coreNrm"
xmlns:ns10="CiscoSpecificPGWNameSpace" xmlns:ns7="apnprofile"
xmlns:ns11="CiscoSpecificSGWNameSpace" xmlns:ns8="saegw">
>
<attributes>
<inventoryUnitType>Managed Element Data</inventoryUnitType>
<vendorUnitFamilyType>CISCO_ASR_5000</vendorUnitFamilyType>
<vendorUnitTypeNumber></vendorUnitTypeNumber>
<vendorName>Cisco</vendorName>
<serialNumber></serialNumber>
<versionNumber>14.0 (43929)</versionNumber>
</attributes>
<InventoryUnit
id="{[ManagedElement(Key=10.56.22.105)][PhysicalRoot][Chassis]}">
<attributes>
<inventoryUnitType>Hardware Unit Data</inventoryUnitType>
<vendorUnitFamilyType>ASR5000 Chassis</vendorUnitFamilyType>
<vendorUnitTypeNumber></vendorUnitTypeNumber>
<vendorName>Cisco</vendorName>
<serialNumber></serialNumber>
<unitPosition>ManagedElement=10.56.22.105, Chassis=1</unitPosition>
</attributes>
<InventoryUnit
id="{[ManagedElement(Key=10.56.22.105)][PhysicalRoot][Chassis][Slot(SlotNu
m=40)][Module]}">
<attributes>
<inventoryUnitType>Hardware Unit Data</inventoryUnitType>
```

```
<vendorUnitFamilyType>Redundancy Crossbar Card -40</vendorUnitFamilyType>
<vendorUnitTypeNumber>Unknown Module</vendorUnitTypeNumber>
<vendorName>Cisco</vendorName>
<serialNumber>SAD154000TG</serialNumber>
<unitPosition>ManagedElement=10.56.22.105, Chassis=1,
SlotNum=40</unitPosition>
<versionNumber>V03</versionNumber>
</attributes>
</InventoryUnit>
  :
  :
  :

<!--Logical Inventory -->

<InventoryUnit
id="{[ManagedElement(Key=10.56.22.105)][LogicalRoot][Context(ContextName=b
iswa)][Mobile][SGWContainer][SGWService(ServiceName=bulu)]}">
<attributes>
<inventoryUnitType>Software Unit Data</inventoryUnitType>
<vendorName>Cisco</vendorName>
</attributes>
<ns2:ManagedFunction
id="{[ManagedElement(Key=10.56.22.105)][LogicalRoot][Context(ContextName=b
iswa)][Mobile][SGWContainer][SGWService(ServiceName=bulu)]}">
<ns2:VsDataContainer id="bulu-VsData1">
<ns2:attributes>
<ns2:vsDataType xsi:type="xs:string"
xmlns:xs="http://www.w3.org/2001/XMLSchema"
xmlns:xsi="http://www.w3.org/2001/XMLSchema-instance">class
com.cisco.prime.esb.tgpp.model.common.ServingGWFunction</ns2:vsDataType>
<ns2:vsDataFormatVersion xsi:type="xs:string"
xmlns:xs="http://www.w3.org/2001/XMLSchema"
xmlns:xsi="http://www.w3.org/2001/XMLSchema-
instance">http://www.3gpp.org/ftp/specs/archive/32_series/32.755#epcNrm-
9.3.0</ns2:vsDataFormatVersion>
<ns2:vsData xsi:type="ns4:vsDataCiscoSpecificMobileContainer"
xmlns:xsi="http://www.w3.org/2001/XMLSchema-instance">
<ns5:ServingGWFunction
id="{[ManagedElement(Key=10.56.22.105)][LogicalRoot][Context(ContextName=b
iswa)][Mobile][SGWContainer][SGWService(ServiceName=bulu)]}">
<ns5:attributes>
<ns5:userLabel>bulu</ns5:userLabel>
<ns5:pLMNIdList/>
<ns5:tACList/>
</ns5:attributes>
<ns2:VsDataContainer id="bulu-VsData1">
<ns2:attributes>
<ns2:vsDataType xsi:type="xs:string" xmlns:xs="http://www


.w3.org/2001/XMLSchema">ServingGWFunction</ns2:vsDataType>
<ns2:vsDataFormatVersion xsi:type="xs:string"
xmlns:xs="http://www.w3.org/2001/XMLSchema">CiscoSpecificAttributes.sgw.1.
0</ns2:vsDataFormatVersion>
<ns2:vsData xsi:type="ns11:SGWServiceType">
```

```
    <ns11:AccountingContext>biswa</ns11:AccountingContext>
    <ns11:AccountingMode>GTPP</ns11:AccountingMode>
    <ns11:EgressContext>biswa</ns11:EgressContext>
    <ns11:EgressProtocol>gtp-pmip</ns11:EgressProtocol>
    <ns11:ServiceStatus>Down</ns11:ServiceStatus>
    </ns2:vsData>
    </ns2:attributes>
    </ns2:VsDataContainer>
    </ns5:ServingGWFunction>
    </ns2:vsData>
    </ns2:attributes>
    </ns2:VsDataContainer>
    </ns2:ManagedFunction>
    </InventoryUnit>



    <!--ACS Inventory -->

<ns2:ManagedFunction
id="{[ManagedElement(Key=SimulatedASR5K)][LogicalRoot][Context(ContextName=lo
cal)][Mobile][ActiveChargingContainer][ActiveChargingService(ServiceName=demo
)]}">
<ns2:VsDataContainer id="demo-VsData1">
<ns2:attributes>
<ns2:vsDataType xsi:type="xs:string"
xmlns:xs="http://www.w3.org/2001/XMLSchema"
xmlns:xsi="http://www.w3.org/2001/XMLSchema-instance">class
com.cisco.prime.esb.tgpp.model.common.AcsProfile</ns2:vsDataType>
<ns2:vsDataFormatVersion xsi:type="xs:string"
xmlns:xs="http://www.w3.org/2001/XMLSchema"
xmlns:xsi="http://www.w3.org/2001/XMLSchema-
instance">CiscoSpecificAttributes.acs.1.0</ns2:vsDataFormatVersion>
<ns2:vsData xsi:type="ns4:vsDataCiscoSpecificMobileContainer"
xmlns:xsi="http://www.w3.org/2001/XMLSchema-instance">
<ns8:AcsProfile
id="{[ManagedElement(Key=SimulatedASR5K)][LogicalRoot][Context(ContextName=lo
cal)][Mobile][ActiveChargingContainer][ActiveChargingService(ServiceName=demo
)]}">
<ns8:attributes>
<ns8:userLabel>demo</ns8:userLabel>
</ns8:attributes>
<ns2:VsDataContainer id="demo-VsData1">
<ns2:attributes>
<ns2:vsDataType xsi:type="xs:string"
xmlns:xs="http://www.w3.org/2001/XMLSchema">ActiveChargingService</ns2:vsData
Type>
<ns2:vsDataFormatVersion xsi:type="xs:string"
xmlns:xs="http://www.w3.org/2001/XMLSchema">CiscoSpecificAttributes.acs.1.0</
ns2:vsDataFormatVersion>
<ns2:vsData xsi:type="ns23:ActiveChargingServiceType"
xmlns:ns23="ActiveChargingServiceType">
<ActiveChargingFairUsage>
<CpuThresholdPercent>100</CpuThresholdPercent>
</ActiveChargingFairUsage>
<AlgMediaIdleTimeout>
```

```
<interval>120 sec</interval>
</AlgMediaIdleTimeout>
<BandwidthPolicyContainer>
<BandwidthPolicy>
<BandwidthPolicyName>hima</BandwidthPolicyName>
<TotalBandwidthIDConfigured>0</TotalBandwidthIDConfigured>
<TotalGroupLimitConfigured>0</TotalGroupLimitConfigured>
</BandwidthPolicy>
<TotalBandwidthPolicyConfigured>1</TotalBandwidthPolicyConfigured>
</BandwidthPolicyContainer>
<CdrFlowControl>Enabled</CdrFlowControl>
<CdrFlowControlUnsentQueueSize>75</CdrFlowControlUnsentQueueSize>
<CdrFlowUnsentQueueHigh>56</CdrFlowUnsentQueueHigh>
<CdrFlowUnsentQueueLow>18</CdrFlowUnsentQueueLow>
<ChargingActionContainer>
<ChargingAction>
<ChargeVolume>ip bytes</ChargeVolume>
<ChargingActionAllocationRetentionPriority/>
<ChargingActionBandwidth>
<BandWidthID>0</BandWidthID>
<Downlink>Disabled</Downlink>
<Uplink>Disabled</Uplink>
</ChargingActionBandwidth>
<ChargingActionBillingAction>
<Edr>Disabled</Edr>
<Egcdr>Disabled</Egcdr>
<RadiusAccountingRecord>Disabled</RadiusAccountingRecord>
<RfAccounting>Disabled</RfAccounting>
<Udr>Enabled</Udr>
</ChargingActionBillingAction>
<ChargingActionFlowAction>
<ClearQuotaRetryTimer>Disabled</ClearQuotaRetryTimer>
<ConditionalRedirect>4</ConditionalRedirect>
<Discard>Disabled</Discard>
<OcsRedirectURL>Disabled</OcsRedirectURL>
<RedirectURL>Disabled</RedirectURL>
<TerminateFlow>Disabled</TerminateFlow>
<TerminateSession>Disabled</TerminateSession>
</ChargingActionFlowAction>
<ChargingActionName>him</ChargingActionName>
<ChargingActionQoS>
<RenegotiateTrafficClass>Disabled</RenegotiateTrafficClass>
</ChargingActionQoS>
<ChargingActionVideo>
<ReaddressingCAE>Disabled</ReaddressingCAE>
<Transrating>Disabled</Transrating>
</ChargingActionVideo>
<ChargingEDRName>Disabled</ChargingEDRName>
<ChargingEGCDRs>Disabled</ChargingEGCDRs>
<ChargingRf>Disabled</ChargingRf>
<ChargingUDRs>Enabled</ChargingUDRs>
<ContentFiltering>Enabled</ContentFiltering>
<ContentId>0</ContentId>
<CreditConrol>Disabled</CreditConrol>
<FlowIdleTimeout>
<interval>300 sec</interval>
```

```
</FlowIdleTimeout>
<FlowMappingIdleTimeout>
<interval>300 sec</interval>
</FlowMappingIdleTimeout>
<LimitForFlowTypeState>Disabled</LimitForFlowTypeState>
<RetransmissionCount>Disabled</RetransmissionCount>
</ChargingAction>
<ChargingAction>
<ChargeVolume>ip bytes</ChargeVolume>
<ChargingActionAllocationRetentionPriority/>
<ChargingActionBandwidth>
<BandWidthID>0</BandWidthID>
<Downlink>Disabled</Downlink>
<Uplink>Disabled</Uplink>
</ChargingActionBandwidth>
<ChargingActionBillingAction>
<Edr>Disabled</Edr>
<Egcdr>Disabled</Egcdr>
<RadiusAccountingRecord>Disabled</RadiusAccountingRecord>
<RfAccounting>Disabled</RfAccounting>
<Udr>Enabled</Udr>
</ChargingActionBillingAction>
<ChargingActionFlowAction>
<ClearQuotaRetryTimer>Disabled</ClearQuotaRetryTimer>
<ConditionalRedirect>Disabled</ConditionalRedirect>
<Discard>Disabled</Discard>
<OcsRedirectURL>Disabled</OcsRedirectURL>
<RedirectURL>Disabled</RedirectURL>
<TerminateFlow>Disabled</TerminateFlow>
<TerminateSession>Enabled</TerminateSession>
</ChargingActionFlowAction>
<ChargingActionName>action1</ChargingActionName>
<ChargingActionQoS>
<RenegotiateTrafficClass>Disabled</RenegotiateTrafficClass>
</ChargingActionQoS>
<ChargingActionVideo>
<ReaddressingCAE>Disabled</ReaddressingCAE>
<Transrating>Disabled</Transrating>
</ChargingActionVideo>
<ChargingEDRName>Disabled</ChargingEDRName>
<ChargingEGCDRs>Disabled</ChargingEGCDRs>
<ChargingRf>Disabled</ChargingRf>
<ChargingUDRs>Enabled</ChargingUDRs>
<ContentFiltering>Enabled</ContentFiltering>
<ContentId>0</ContentId>
<CreditConrol>Disabled</CreditConrol>
<FlowIdleTimeout>
<interval>300 sec</interval>
</FlowIdleTimeout>
<FlowMappingIdleTimeout>
<interval>300 sec</interval>
</FlowMappingIdleTimeout>
<LimitForFlowTypeState>Disabled</LimitForFlowTypeState>
<RetransmissionCount>Disabled</RetransmissionCount>
</ChargingAction>
<ChargingAction>
```

```
<ChargeVolume>ip bytes</ChargeVolume>
<ChargingActionAllocationRetentionPriority/>
<ChargingActionBandwidth>
<BandWidthID>0</BandWidthID>
<Downlink>Disabled</Downlink>
<Uplink>Disabled</Uplink>
</ChargingActionBandwidth>
<ChargingActionBillingAction>
<Edr>Disabled</Edr>
<Egcdr>Disabled</Egcdr>
<RadiusAccountingRecord>Disabled</RadiusAccountingRecord>
<RfAccounting>Disabled</RfAccounting>
<Udr>Enabled</Udr>
</ChargingActionBillingAction>
<ChargingActionFlowAction>
<ClearQuotaRetryTimer>Disabled</ClearQuotaRetryTimer>
<ConditionalRedirect>Disabled</ConditionalRedirect>
<Discard>Disabled</Discard>
<OcsRedirectURL>Disabled</OcsRedirectURL>
<RedirectURL>Disabled</RedirectURL>
<TerminateFlow>Disabled</TerminateFlow>
<TerminateSession>Disabled</TerminateSession>
</ChargingActionFlowAction>
<ChargingActionName>deva-charging</ChargingActionName>
<ChargingActionQoS>
<RenegotiateTrafficClass>Disabled</RenegotiateTrafficClass>
</ChargingActionQoS>
<ChargingActionVideo>
<ReaddressingCAE>Disabled</ReaddressingCAE>
<Transrating>Disabled</Transrating>
</ChargingActionVideo>
<ChargingEDRName>Disabled</ChargingEDRName>
<ChargingEGCDRs>Disabled</ChargingEGCDRs>
<ChargingRf>Disabled</ChargingRf>
<ChargingUDRs>Enabled</ChargingUDRs>
<ContentFiltering>Enabled</ContentFiltering>
<ContentId>5</ContentId>
<CreditConrol>Disabled</CreditConrol>
<FlowIdleTimeout>
<interval>300 sec</interval>
</FlowIdleTimeout>
<FlowMappingIdleTimeout>
<interval>300 sec</interval>
</FlowMappingIdleTimeout>
<LimitForFlowTypeState>Disabled</LimitForFlowTypeState>
<RetransmissionCount>Disabled</RetransmissionCount>
</ChargingAction>
<ChargingAction>
<ChargeVolume>ip bytes</ChargeVolume>
<ChargingActionAllocationRetentionPriority>
<PriorityCapabilityIndicator>1</PriorityCapabilityIndicator>
<PriorityLevel>4</PriorityLevel>
<PriorityVulnerabilityIndicator>0</PriorityVulnerabilityIndicator>
</ChargingActionAllocationRetentionPriority>
<ChargingActionBandwidth>
<BandWidthID>0</BandWidthID>
```

```
<Downlink>Disabled</Downlink>
<Uplink>Disabled</Uplink>
</ChargingActionBandwidth>
<ChargingActionBillingAction>
<Edr>Disabled</Edr>
<Egcdr>Disabled</Egcdr>
<RadiusAccountingRecord>Disabled</RadiusAccountingRecord>
<RfAccounting>Disabled</RfAccounting>
<Udr>Enabled</Udr>
</ChargingActionBillingAction>
<ChargingActionFlowAction>
<ClearQuotaRetryTimer>Disabled</ClearQuotaRetryTimer>
<ConditionalRedirect>karteekkarteek</ConditionalRedirect>
<Discard>Disabled</Discard>
<OcsRedirectURL>Disabled</OcsRedirectURL>
<RedirectURL>Disabled</RedirectURL>
<TerminateFlow>Disabled</TerminateFlow>
<TerminateSession>Disabled</TerminateSession>
</ChargingActionFlowAction>
<ChargingActionName>hima</ChargingActionName>
<ChargingActionQoS>
<RenegotiateTrafficClass>Disabled</RenegotiateTrafficClass>
</ChargingActionQoS>
<ChargingActionVideo>
<ReaddressingCAE>Disabled</ReaddressingCAE>
<Transrating>Disabled</Transrating>
</ChargingActionVideo>
<ChargingEDRName>Disabled</ChargingEDRName>
<ChargingEGCDRs>Disabled</ChargingEGCDRs>
<ChargingRf>Disabled</ChargingRf>
<ChargingUDRs>Enabled</ChargingUDRs>
<ContentFiltering>Enabled</ContentFiltering>
<ContentId>0</ContentId>
<CreditConrol>Enabled</CreditConrol>
<CreditRatingGroup>5000</CreditRatingGroup>
<FlowIdleTimeout>
<interval>300 sec</interval>
</FlowIdleTimeout>
<FlowMappingIdleTimeout>
<interval>300 sec</interval>
</FlowMappingIdleTimeout>
<LimitForFlowTypeState>Disabled</LimitForFlowTypeState>
<RetransmissionCount>Disabled</RetransmissionCount>
</ChargingAction>
</ChargingActionContainer>
<ContentFiltering>Disabled</ContentFiltering>
<ContentFilteringCategoriesContainer/>
<ContentFilteringMatchMethod>generic</ContentFilteringMatchMethod>
<CreditControlContainer>
<CreditControlGroups>
<ApnType>gn</ApnType>
<CreditControlDiameter>
<Dictionary>dcca-custom8</Dictionary>
<PendingTimeout>
<interval>10 sec</interval>
</PendingTimeout>
```

```
<SessionFailover>Disabled</SessionFailover>
</CreditControlDiameter>
<FailureHandling>
<InitialRequest>terminate</InitialRequest>
<TerminateRequest>retry-and-terminate</TerminateRequest>
<UpdateRequest>retry-and-terminate</UpdateRequest>
</FailureHandling>
<Group>dcca-1</Group>
<Mode>Radius</Mode>
<MsccFinalUnitAction>category</MsccFinalUnitAction>
<PendingTrafficTreatment>
<ForcedReauth>drop</ForcedReauth>
<NoQuota>drop</NoQuota>
<QuotaExhausted>drop</QuotaExhausted>
<Trigger>drop</Trigger>
<ValidityExpired>drop</ValidityExpired>
</PendingTrafficTreatment>
<Quota>
<HoldingTime>
<interval>N/A</interval>
</HoldingTime>
<RequestTrigger>include packet</RequestTrigger>
<TimeThreshold>N/A</TimeThreshold>
<UnitsThreshold>N/A</UnitsThreshold>
<ValidityTime>
<interval>N/A</interval>
</ValidityTime>
<VolumeThreshold>N/A</VolumeThreshold>
</Quota>
<ServerUnreachableFailureHandling>
<InitialRequest>N/A</InitialRequest>
<UpdateRequest>N/A</UpdateRequest>
</ServerUnreachableFailureHandling>
<TriggerType>N/A</TriggerType>
</CreditControlGroups>
<CreditControlGroups>
<ApnType>gn</ApnType>
<CreditControlDiameter>
<Dictionary>dcca-custom8</Dictionary>
<PendingTimeout>
<interval>10 sec</interval>
</PendingTimeout>
<SessionFailover>Disabled</SessionFailover>
</CreditControlDiameter>
<FailureHandling>
<InitialRequest>terminate</InitialRequest>
<TerminateRequest>retry-and-terminate</TerminateRequest>
<UpdateRequest>retry-and-terminate</UpdateRequest>
</FailureHandling>
<Group>deva-credit-control</Group>
<Mode>Diameter</Mode>
<MsccFinalUnitAction>category</MsccFinalUnitAction>
<PendingTrafficTreatment>
<ForcedReauth>drop</ForcedReauth>
<NoQuota>drop</NoQuota>
<QuotaExhausted>drop</QuotaExhausted>
```

```
<Trigger>drop</Trigger>
<ValidityExpired>drop</ValidityExpired>
</PendingTrafficTreatment>
<Quota>
<HoldingTime>
<interval>N/A</interval>
</HoldingTime>
<RequestTrigger>include packet</RequestTrigger>
<TimeThreshold>N/A</TimeThreshold>
<UnitsThreshold>N/A</UnitsThreshold>
<ValidityTime>
<interval>N/A</interval>
</ValidityTime>
<VolumeThreshold>N/A</VolumeThreshold>
</Quota>
<ServerUnreachableFailureHandling>
<InitialRequest>N/A</InitialRequest>
<UpdateRequest>N/A</UpdateRequest>
</ServerUnreachableFailureHandling>
<TriggerType>N/A</TriggerType>
</CreditControlGroups>
<CreditControlGroups>
<ApnType>virtual</ApnType>
<CreditControlDiameter>
<Dictionary>dcca-custom25</Dictionary>
<EndPointRealm>N/A</EndPointRealm>
<EndpointName>deva-origin</EndpointName>
<PendingTimeout>
<interval>300 sec</interval>
</PendingTimeout>
<SessionFailover>Enabled</SessionFailover>
</CreditControlDiameter>
<DiameterPeerSelect>
<ImsiEndValue>256</ImsiEndValue>
<ImsiRangeMode>prefix</ImsiRangeMode>
<ImsiStartValue>234</ImsiStartValue>
<Peer>deva-peer</Peer>
<Realm>N/A</Realm>
<SecondaryPeer>deva-secondary</SecondaryPeer>
<SecondaryRealm>N/A</SecondaryRealm>
</DiameterPeerSelect>
<FailureHandling>
<InitialRequest>continue go-offline-after-tx-expiry</InitialRequest>
<TerminateRequest>continue retry-after-tx-expiry</TerminateRequest>
<UpdateRequest>terminate</UpdateRequest>
</FailureHandling>
<Group>deva-credit</Group>
<Mode>Radius</Mode>
<MsccFinalUnitAction>session on-per-mscc-exhaustion</MsccFinalUnitAction>
<PendingTrafficTreatment>
<ForcedReauth>drop</ForcedReauth>
<NoQuota>buffer</NoQuota>
<QuotaExhausted>buffer</QuotaExhausted>
<Trigger>drop</Trigger>
<ValidityExpired>drop</ValidityExpired>
</PendingTrafficTreatment>
```

```
<Quota>
<RequestTrigger>exclude packet</RequestTrigger>
<TimeThreshold>23 (percent)</TimeThreshold>
<UnitsThreshold>45 (percent)</UnitsThreshold>
<ValidityTime>
<interval>6553 sec</interval>
</ValidityTime>
<VolumeThreshold>85 (percent)</VolumeThreshold>
</Quota>
<ServerUnreachableFailureHandling>
<InitialRequest>continue</InitialRequest>
<UpdateRequest>continue</UpdateRequest>
</ServerUnreachableFailureHandling>
<TriggerType>cellid</TriggerType>
</CreditControlGroups>
<CreditControlGroups>
<ApnType>gn</ApnType>
<CreditControlDiameter>
<Dictionary>dcca-custom8</Dictionary>
<PendingTimeout>
<interval>10 sec</interval>
</PendingTimeout>
<SessionFailover>Disabled</SessionFailover>
</CreditControlDiameter>
<FailureHandling>
<InitialRequest>terminate</InitialRequest>
<TerminateRequest>retry-and-terminate</TerminateRequest>
<UpdateRequest>retry-and-terminate</UpdateRequest>
</FailureHandling>
<Group>deva-credit-bug</Group>
<Mode>Radius</Mode>
<MsccFinalUnitAction>category</MsccFinalUnitAction>
<PendingTrafficTreatment>
<ForcedReauth>drop</ForcedReauth>
<NoQuota>drop</NoQuota>
<QuotaExhausted>drop</QuotaExhausted>
<Trigger>drop</Trigger>
<ValidityExpired>drop</ValidityExpired>
</PendingTrafficTreatment>
<Quota>
<HoldingTime>
<interval>N/A</interval>
</HoldingTime>
<RequestTrigger>include packet</RequestTrigger>
<TimeThreshold>N/A</TimeThreshold>
<UnitsThreshold>N/A</UnitsThreshold>
<ValidityTime>
<interval>N/A</interval>
</ValidityTime>
<VolumeThreshold>N/A</VolumeThreshold>
</Quota>
<ServerUnreachableFailureHandling>
<InitialRequest>N/A</InitialRequest>
<UpdateRequest>N/A</UpdateRequest>
</ServerUnreachableFailureHandling>
<TriggerType>N/A</TriggerType>
```

```
</CreditControlGroups>
<CreditControlGroups>
<ApnType>gn</ApnType>
<CreditControlDiameter>
<Dictionary>dcca-custom8</Dictionary>
<PendingTimeout>
<interval>10 sec</interval>
</PendingTimeout>
<SessionFailover>Disabled</SessionFailover>
</CreditControlDiameter>
<FailureHandling>
<InitialRequest>continue</InitialRequest>
<TerminateRequest>continue</TerminateRequest>
<UpdateRequest>continue</UpdateRequest>
</FailureHandling>
<Group>hima</Group>
<Mode>Diameter</Mode>
<MsccFinalUnitAction>category</MsccFinalUnitAction>
<PendingTrafficTreatment>
<ForcedReauth>pass</ForcedReauth>
<NoQuota>buffer</NoQuota>
<QuotaExhausted>pass</QuotaExhausted>
<Trigger>pass</Trigger>
<ValidityExpired>pass</ValidityExpired>
</PendingTrafficTreatment>
<Quota>
<HoldingTime>
<interval>987937 sec</interval>
</HoldingTime>
<RequestTrigger>include packet</RequestTrigger>
<TimeThreshold>N/A</TimeThreshold>
<UnitsThreshold>100 (percent)</UnitsThreshold>
<ValidityTime>
<interval>235 sec</interval>
</ValidityTime>
<VolumeThreshold>78763 (bytes)</VolumeThreshold>
</Quota>
<ServerUnreachableFailureHandling>
<InitialRequest>continue</InitialRequest>
<UpdateRequest>continue</UpdateRequest>
</ServerUnreachableFailureHandling>
<TriggerType>lac</TriggerType>
</CreditControlGroups>
</CreditControlContainer>
<DeepPacketInspection>Enabled</DeepPacketInspection>
<DymamicContentFiltering>Disabled</DymamicContentFiltering>
<GroupofRuledefContainer>
<GroupOfRuledef>
<ApplicationType>Charging</ApplicationType>
<Name>Ruledefs1</Name>
</GroupOfRuledef>
</GroupofRuledefContainer>
<IcmpFlowIdleTimeout>
<interval>300 sec</interval>
</IcmpFlowIdleTimeout>
```

```
<InterpretationOfChargingRulebaseName>active-charging-group-of-
ruledefs</InterpretationOfChargingRulebaseName>
<PassiveMode>Disabled</PassiveMode>
<RulebaseContainer>
<Rulebase>
<ChargingRuleOptimization>High</ChargingRuleOptimization>
<DelayedCharging>Disabled</DelayedCharging>
<FairUsageWaiverPercentage>425</FairUsageWaiverPercentage>
<IgnorePortInapplicationHeader>Disabled</IgnorePortInapplicationHeader>
<P2pDynamicRouting>Enabled</P2pDynamicRouting>
<QosRenogotiationTimeout>
<interval>253265 sec</interval>
</QosRenogotiationTimeout>
<RtpDynamicRouting>Enabled</RtpDynamicRouting>
<RulebaseBillingAndChargingRecords>
<EdrSupressZeroByteRecords>Disabled</EdrSupressZeroByteRecords>
</RulebaseBillingAndChargingRecords>
<RulebaseCCAFields>
<QuotaRetryTime>
<interval>876 sec</interval>
</QuotaRetryTime>
<RulebaseCCAQuotaHoldingTimeEntries>
<ContentId>2147483647</ContentId>
<QuotaHoldingTime>
<interval>4000000000 sec</interval>
</QuotaHoldingTime>
</RulebaseCCAQuotaHoldingTimeEntries>
<RulebaseCCATimeDurationAlgorithmEntries>
<AlgorithmName>Parking Meter</AlgorithmName>
<ContentId>any</ContentId>
<Time>4294967295 (secs)</Time>
</RulebaseCCATimeDurationAlgorithmEntries>
</RulebaseCCAFields>
<RulebaseContentFiltering/>
<RulebaseEGCDRFields>
<DownlinkOctets>100003</DownlinkOctets>
<RulebaseEGCDRTariffTimeThresholdEntries>
<TariffName>Time1</TariffName>
<TarriffTimeValue>
<hrs>23</hrs>
<mins>59</mins>
</TarriffTimeValue>
</RulebaseEGCDRTariffTimeThresholdEntries>
<ThresholdInterval>40000000 (secs)</ThresholdInterval>
<TimeBasedMetering>Disabled</TimeBasedMetering>
<TotalOctets>5604321</TotalOctets>
<UplinkOctets>5000005</UplinkOctets>
</RulebaseEGCDRFields>
<RulebaseFlowEndConditions/>
<RulebaseName>hima</RulebaseName>
<RulebaseTCPProxyMode>
<ContentFiltering>Disabled</ContentFiltering>
<DccaEnabled>Disabled</DccaEnabled>
<IpReaddressing>Enabled</IpReaddressing>
<NextHopReaddressing>Disabled</NextHopReaddressing>
<ProxyMode>Dynamic</ProxyMode>
```

```
<XheaderInsertion>Disabled</XheaderInsertion>
</RulebaseTCPProxyMode>
<RulebaseTetheringDetection>
<OsBasedDetection>Disabled</OsBasedDetection>
<TetheringDetection>Enabled</TetheringDetection>
<UaBasedDetection>Enabled</UaBasedDetection>
</RulebaseTetheringDetection>
<RulebaseUDRFields>
<DownlinkOctets>2000075</DownlinkOctets>
<ThresholdInterval>
<interval>60 sec</interval>
</ThresholdInterval>
<TotalOctets>0</TotalOctets>
<UdrTrigger>Enabled</UdrTrigger>
<UplinkOctets>584533</UplinkOctets>
</RulebaseUDRFields>
<UrlBlackListingAction>terminate-flow</UrlBlackListingAction>
<UrlBlacklistingContentId>35</UrlBlacklistingContentId>
<XHeaderReEncryptionPeriod>
<interval>0 min</interval>
</XHeaderReEncryptionPeriod>
</Rulebase>
<Rulebase>
<ChargingRuleOptimization>High</ChargingRuleOptimization>
<DelayedCharging>Disabled</DelayedCharging>
<FairUsageWaiverPercentage>20</FairUsageWaiverPercentage>
<IgnorePortInapplicationHeader>Disabled</IgnorePortInapplicationHeader>
<P2pDynamicRouting>Disabled</P2pDynamicRouting>
<RtpDynamicRouting>Disabled</RtpDynamicRouting>
<RulebaseBillingAndChargingRecords>
<EdrSupressZeroByteRecords>Disabled</EdrSupressZeroByteRecords>
</RulebaseBillingAndChargingRecords>
<RulebaseCCAFields>
<QuotaRetryTime>
<interval>60 sec</interval>
</QuotaRetryTime>
</RulebaseCCAFields>
<RulebaseContentFiltering/>
<RulebaseEGCDRFields>
<DownlinkOctets>0</DownlinkOctets>
<ThresholdInterval>0 (secs)</ThresholdInterval>
<TimeBasedMetering>Disabled</TimeBasedMetering>
<TotalOctets>0</TotalOctets>
<UplinkOctets>0</UplinkOctets>
</RulebaseEGCDRFields>
<RulebaseFlowEndConditions/>
<RulebaseName>default</RulebaseName>
<RulebaseTCPProxyMode>
<ProxyMode>Disabled</ProxyMode>
</RulebaseTCPProxyMode>
<RulebaseTetheringDetection>
<TetheringDetection>Disabled</TetheringDetection>
</RulebaseTetheringDetection>
<RulebaseUDRFields>
<DownlinkOctets>0</DownlinkOctets>
<ThresholdInterval>
```

```
<interval>0 sec</interval>
</ThresholdInterval>
<TotalOctets>0</TotalOctets>
<UdrTrigger>Disabled</UdrTrigger>
<UplinkOctets>0</UplinkOctets>
</RulebaseUDRFields>
<UrlBlackListingAction>Not Configured</UrlBlackListingAction>
<XHeaderReEncryptionPeriod>
<interval>0 min</interval>
</XHeaderReEncryptionPeriod>
</Rulebase>
<Rulebase>
<ChargingRuleOptimization>High</ChargingRuleOptimization>
<DelayedCharging>Disabled</DelayedCharging>
<FairUsageWaiverPercentage>20</FairUsageWaiverPercentage>
<IgnorePortInapplicationHeader>Disabled</IgnorePortInapplicationHeader>
<P2pDynamicRouting>Disabled</P2pDynamicRouting>
<RtpDynamicRouting>Disabled</RtpDynamicRouting>
<RulebaseBillingAndChargingRecords>
<EdrSupressZeroByteRecords>Disabled</EdrSupressZeroByteRecords>
</RulebaseBillingAndChargingRecords>
<RulebaseCCAFields>
<QuotaRetryTime>
<interval>60 sec</interval>
</QuotaRetryTime>
</RulebaseCCAFields>
<RulebaseContentFiltering/>
<RulebaseEGCDRFields>
<DownlinkOctets>0</DownlinkOctets>
<ThresholdInterval>0 (secs)</ThresholdInterval>
<TimeBasedMetering>Disabled</TimeBasedMetering>
<TotalOctets>0</TotalOctets>
<UplinkOctets>0</UplinkOctets>
</RulebaseEGCDRFields>
<RulebaseFlowEndConditions/>
<RulebaseName>wireless</RulebaseName>
<RulebaseTCPProxyMode>
<ProxyMode>Disabled</ProxyMode>
</RulebaseTCPProxyMode>
<RulebaseTetheringDetection>
<TetheringDetection>Disabled</TetheringDetection>
</RulebaseTetheringDetection>
<RulebaseUDRFields>
<DownlinkOctets>0</DownlinkOctets>
<ThresholdInterval>
<interval>0 sec</interval>
</ThresholdInterval>
<TotalOctets>0</TotalOctets>
<UdrTrigger>Disabled</UdrTrigger>
<UplinkOctets>0</UplinkOctets>
</RulebaseUDRFields>
<UrlBlackListingAction>Not Configured</UrlBlackListingAction>
<XHeaderReEncryptionPeriod>
<interval>0 min</interval>
</XHeaderReEncryptionPeriod>
</Rulebase>
```

```
</RulebaseContainer>
<RuledefContainer>
<Ruledef>
<ApplicationType>Charging</ApplicationType>
<CopyPacketToLog>Disabled</CopyPacketToLog>
<MultiLineOR>Disabled</MultiLineOR>
<RuleName>test1</RuleName>
<TetheredFlowCheck>Disabled</TetheredFlowCheck>
</Ruledef>
<Ruledef>
<ApplicationType>Charging</ApplicationType>
<CopyPacketToLog>Disabled</CopyPacketToLog>
<MultiLineOR>Disabled</MultiLineOR>
<RuleName>rule1</RuleName>
<TetheredFlowCheck>Disabled</TetheredFlowCheck>
</Ruledef>
</RuledefContainer>
<SelectedChargingRulebaseForAVP>Last</SelectedChargingRulebaseForAVP>
<TcpFlowIdleTimeout>
<interval>300 sec</interval>
</TcpFlowIdleTimeout>
<TcpFlowMappingIdleTimeout>
<interval>300 sec</interval>
</TcpFlowMappingIdleTimeout>
<UdpFlowIdleTimeout>
<interval>300 sec</interval>
</UdpFlowIdleTimeout>
<UdpFlowMappingTimeout>
<interval>N/A</interval>
</UdpFlowMappingTimeout>
<UrlBlackListing>Enabled</UrlBlackListing>
<UrlBlacklistingMatchMethod>exact</UrlBlacklistingMatchMethod>
</ns2:vsData>
</ns2:attributes>
</ns2:VsDataContainer>
</ns8:AcsProfile>
</ns2:vsData>
</ns2:attributes>
</ns2:VsDataContainer>
</ns2:ManagedFunction>
</ns15:InventoryUnit>
    :
    :
    :

    <!—AAA Group Inventory -->

    <ns2:ManagedFunction
    id="{[ManagedElement(Key=SimulatedASR5K)][LogicalRoot][Context(ContextName
    =local)][AAAContainer][AAAGroupContainer][AAAGroup(GroupName=default)]}">
    <ns2:VsDataContainer id="default-VsData1">
    <ns2:attributes>
    <ns2:vsDataType xsi:type="xs:string"
    xmlns:xs="http://www.w3.org/2001/XMLSchema"
    xmlns:xsi="http://www.w3.org/2001/XMLSchema-instance">class
    com.cisco.prime.esb.tgpp.model.common.AAAGroup</ns2:vsDataType>
```

```
<ns2:vsDataFormatVersion xsi:type="xs:string"
xmlns:xs="http://www.w3.org/2001/XMLSchema"
xmlns:xsi="http://www.w3.org/2001/XMLSchema-
instance">CiscoSpecificAttributes.aaa.1.0</ns2:vsDataFormatVersion>
<ns2:vsData xsi:type="ns4:vsDataCiscoSpecificMobileContainer"
xmlns:xsi="http://www.w3.org/2001/XMLSchema-instance">
<ns10:AAAGroup
id="{[ManagedElement(Key=SimulatedASR5K)][LogicalRoot][Context(ContextName
=local)][AAAContainer][AAAGroupContainer][AAAGroup(GroupName=default)]}">
<ns10:attributes>
<ns10:userLabel>default</ns10:userLabel>
</ns10:attributes>
<ns2:VsDataContainer id="default-VsData1">
<ns2:attributes>
<ns2:vsDataType xsi:type="xs:string"
xmlns:xs="http://www.w3.org/2001/XMLSchema">AAAGroup</ns2:vsDataType>
<ns2:vsDataFormatVersion xsi:type="xs:string"
xmlns:xs="http://www.w3.org/2001/XMLSchema">CiscoSpecificAttributes.aaa.1.
0</ns2:vsDataFormatVersion>
<ns2:vsData xsi:type="ns23:AAAGroupType" xmlns:ns23="AAAGroupType">
<AAADiameterConfiguration>
<AAADiameterAccountingGeneralConfiguration>
<Dictionary>nasreq</Dictionary>
<RequestTimeout>
<interval>20 sec</interval>
</RequestTimeout>
</AAADiameterAccountingGeneralConfiguration>
<AAADiameterAccountingServersEntries>
<DiameterServerHostName>sdfg</DiameterServerHostName>
<NumberOfInstanceInDownState>21</NumberOfInstanceInDownState>
<NumberOfInstanceInUpState>0</NumberOfInstanceInUpState>
<Priority>23</Priority>
</AAADiameterAccountingServersEntries>
<AAADiameterAccountingServersEntries>
<DiameterServerHostName>s123</DiameterServerHostName>
<NumberOfInstanceInDownState>21</NumberOfInstanceInDownState>
<NumberOfInstanceInUpState>0</NumberOfInstanceInUpState>
<Priority>36</Priority>
</AAADiameterAccountingServersEntries>
<AAADiameterAuthenticationGeneralConfiguration>
<Dictionary>aaa-custom11</Dictionary>
<RequestTimeout>
<interval>20 sec</interval>
</RequestTimeout>
<RedirectHostAVP>Disabled</RedirectHostAVP>
</AAADiameterAuthenticationGeneralConfiguration>
<AAADiameterAuthenticationServersEntries>
<DiameterServerHostName>abcdert</DiameterServerHostName>
<NumberOfInstanceInDownState>21</NumberOfInstanceInDownState>
<NumberOfInstanceInUpState>0</NumberOfInstanceInUpState>
<Priority>444</Priority>
</AAADiameterAuthenticationServersEntries>
<AAADiameterAuthenticationServersEntries>
<DiameterServerHostName>ab</DiameterServerHostName>
<NumberOfInstanceInDownState>21</NumberOfInstanceInDownState>
<NumberOfInstanceInUpState>0</NumberOfInstanceInUpState>
```

```
<Priority>34</Priority>
</AAADiameterAuthenticationServersEntries>
<GroupName>default</GroupName>
</AAADiameterConfiguration>
<AAARadiusConfiguration>
<AAARadiusAccountingGeneralConfiguration>
<AccountingGTPtriggerPolicy>standard</AccountingGTPtriggerPolicy>
<AccountingRequestMaxRetries>5</AccountingRequestMaxRetries>
<AccountingResponseTimeout>
<interval>3 sec</interval>
</AccountingResponseTimeout>
<ApnToBeIncluded>Gn</ApnToBeIncluded>
<Archive>Enabled</Archive>
<FireAndForget>Disabled</FireAndForget>
<MaxOutstandingAAAMessages>256</MaxOutstandingAAAMessages>
<MaxPDUSize>2048</MaxPDUSize>
<RemoteAddress>Disabled</RemoteAddress>
<ServerBillingVersion>0</ServerBillingVersion>
<ServerDeadTime>
<interval>10 min</interval>
</ServerDeadTime>
<ServerSelectionAlgorithm>First-server</ServerSelectionAlgorithm>
</AAARadiusAccountingGeneralConfiguration>
<AAARadiusAccountingKeepAliveAndDeadServerConfiguration>
<CallingStationID>000000000000000</CallingStationID>
<DetectDeadServerConsecutiveFailures>4</DetectDeadServerConsecutiveFailure
s>
<DetectDeadServerKeepAlive>Disabled</DetectDeadServerKeepAlive>
<KeepAliveConsecutiveResponse>1</KeepAliveConsecutiveResponse>
<KeepAliveInterval>
<interval>30 sec</interval>
</KeepAliveInterval>
<KeepAliveMaxRetries>3</KeepAliveMaxRetries>
<KeepAliveTimeout>
<interval>3 sec</interval>
</KeepAliveTimeout>
<UserName>Test-Username</UserName>
</AAARadiusAccountingKeepAliveAndDeadServerConfiguration>
<AAARadiusAuthenticationGeneralConfiguration>
<ApnToBeIncluded>Gn</ApnToBeIncluded>
<AuthenticateNullUserName>Enabled</AuthenticateNullUserName>
<AuthenticationRequestMaxRetries>5</AuthenticationRequestMaxRetries>
<AuthenticationResponsetimeout>
<interval>3 sec</interval>
</AuthenticationResponsetimeout>
<MaxOutstandingAAAMessages>256</MaxOutstandingAAAMessages>
<ModifyNASIP>Disabled</ModifyNASIP>
<ProbeInterval>
<interval>60 sec</interval>
</ProbeInterval>
<ProbeMaxRetries>5</ProbeMaxRetries>
<ProbeTimeout>
<interval>3 sec</interval>
</ProbeTimeout>
<ServerDeadTime>
<interval>10 min</interval>
```

```
</ServerDeadTime>
<ServerSelectionAlgorithm>First-server</ServerSelectionAlgorithm>
</AAARadiusAuthenticationGeneralConfiguration>
<AAARadiusAuthenticationKeepAliveAndDeadServerConfiguration>
<CallingStationID>000000000000000</CallingStationID>
<DetectDeadServerConsecutiveFailures>4</DetectDeadServerConsecutiveFailure
s>
<DetectDeadServerKeepAlive>Disabled</DetectDeadServerKeepAlive>
<KeepAliveConsecutiveResponse>1</KeepAliveConsecutiveResponse>
<KeepAliveInterval>
<interval>30 sec</interval>
</KeepAliveInterval>
<KeepAliveMaxRetries>3</KeepAliveMaxRetries>
<KeepAliveTimeout>
<interval>3 sec</interval>
</KeepAliveTimeout>
<UserName>Test-Username</UserName>
<AllowAccessReject>Disabled</AllowAccessReject>
<AuthenticationPassword>Test-Password</AuthenticationPassword>
</AAARadiusAuthenticationKeepAliveAndDeadServerConfiguration>
<AAARadiusChargingGeneralConfiguration>
<AccountingServerSelectionAlgorithm>First-
server</AccountingServerSelectionAlgorithm>
<AuthenticationServerSelectionAlgorithm>First-
server</AuthenticationServerSelectionAlgorithm>
<ChargingDetectDeadServerConsecutiveFailures>4</ChargingDetectDeadServerCo
nsecutiveFailures>
<MaximumOutstandingAAAMessages>256</MaximumOutstandingAAAMessages>
<ServerDeadTime>
<interval>10 min</interval>
</ServerDeadTime>
<ServerMaxRetries>5</ServerMaxRetries>
<ServerResponseTimeout>
<interval>3 sec</interval>
</ServerResponseTimeout>
</AAARadiusChargingGeneralConfiguration>
<AAARadiusChargingTriggersConfiguration>
<MsTimezoneChangeTrigger>Enabled</MsTimezoneChangeTrigger>
<QualityOfServiceChangeTrigger>Enabled</QualityOfServiceChangeTrigger>
<RadioAccessTechnologyChangeTrigger>Enabled</RadioAccessTechnologyChangeTr
igger>
<RoutingAreaInformationChangeTrigger>Enabled</RoutingAreaInformationChange
Trigger>
<ServingNodeChangeTrigger>Enabled</ServingNodeChangeTrigger>
<UserLocationInformationChangeTrigger>Enabled</UserLocationInformationChan
geTrigger>
</AAARadiusChargingTriggersConfiguration>
<AllowAccountingDown>Enabled</AllowAccountingDown>
<AllowAuthenticationDown>Disabled</AllowAuthenticationDown>
<AuthenticatorValidation>Enabled</AuthenticatorValidation>
<Dictionary>starent-vsa1</Dictionary>
<GroupName>default</GroupName>
</AAARadiusConfiguration>
</ns2:vsData>
</ns2:attributes>
</ns2:VsDataContainer>
```

```
</ns10:AAAGroup>
</ns2:vsData>
</ns2:attributes>
</ns2:VsDataContainer>
</ns2:ManagedFunction>
</ns15:InventoryUnit>
.
.
.
.

<!—AAA DiameterEndpoint Inventory -->

<ns2:ManagedFunction
id="{[ManagedElement(Key=SimulatedASR5K)][LogicalRoot][Context(ContextName
=local)][AAAContainer][AAADiameterEndpointContainer][AAADiameterEndpoint(E
ndpointName=endpoint2)]}">
<ns2:VsDataContainer id="endpoint2-VsData1">
<ns2:attributes>
<ns2:vsDataType xsi:type="xs:string"
xmlns:xs="http://www.w3.org/2001/XMLSchema"
xmlns:xsi="http://www.w3.org/2001/XMLSchema-instance">class
com.cisco.prime.esb.tgpp.model.common.AAADiameterEndpoint</ns2:vsDataType>
<ns2:vsDataFormatVersion xsi:type="xs:string"
xmlns:xs="http://www.w3.org/2001/XMLSchema"
xmlns:xsi="http://www.w3.org/2001/XMLSchema-
instance">CiscoSpecificAttributes.aaa.1.0</ns2:vsDataFormatVersion>
<ns2:vsData xsi:type="ns4:vsDataCiscoSpecificMobileContainer"
xmlns:xsi="http://www.w3.org/2001/XMLSchema-instance">
<ns11:AAADiameterEndpoint
id="{[ManagedElement(Key=SimulatedASR5K)][LogicalRoot][Context(ContextName
=local)][AAAContainer][AAADiameterEndpointContainer][AAADiameterEndpoint(E
ndpointName=endpoint2)]}">
<ns11:attributes>
<ns11:userLabel>endpoint2</ns11:userLabel>
</ns11:attributes>
<ns2:VsDataContainer id="endpoint2-VsData1">
<ns2:attributes>
<ns2:vsDataType xsi:type="xs:string"
xmlns:xs="http://www.w3.org/2001/XMLSchema">AAADiameterEndpoint</ns2:vsDat
aType>
<ns2:vsDataFormatVersion xsi:type="xs:string"
xmlns:xs="http://www.w3.org/2001/XMLSchema">CiscoSpecificAttributes.aaa.1.
0</ns2:vsDataFormatVersion>
<ns2:vsData xsi:type="ns23:AAADiameterEndpointType"
xmlns:ns23="AAADiameterEndpointType">
<AAADiameterRouteEntries>
<Application>CC Not Configured</Application>
<Origin>*</Origin>
<PeerHostName>*</PeerHostName>
<PeerName>peer2</PeerName>
<PeerRealm>starentnetworks.com</PeerRealm>
<RouteType>Static</RouteType>
<RouteWeight>10</RouteWeight>
</AAADiameterRouteEntries>
<AAADiameterRouteEntries>
```

```
<Application>CC Not Configured</Application>
<Origin>*</Origin>
<PeerHostName>peer2</PeerHostName>
<PeerName>peer2</PeerName>
<PeerRealm>starentnetworks.com</PeerRealm>
<RouteType>Static</RouteType>
<RouteWeight>10</RouteWeight>
</AAADiameterRouteEntries>
<AAADiameterRouteEntries>
<Application>CC Not Configured</Application>
<Origin>*</Origin>
<PeerHostName>*</PeerHostName>
<PeerName>peer-5</PeerName>
<PeerRealm>starentnetworks.com</PeerRealm>
<RouteType>Static</RouteType>
<RouteWeight>10</RouteWeight>
</AAADiameterRouteEntries>
<AAADiameterRouteEntries>
<Application>CC Not Configured</Application>
<Origin>*</Origin>
<PeerHostName>*</PeerHostName>
<PeerName>peer12</PeerName>
<PeerRealm>starentnetworks.com</PeerRealm>
<RouteType>Static</RouteType>
<RouteWeight>10</RouteWeight>
</AAADiameterRouteEntries>
<AAADiameterRouteEntries>
<Application>CC Not Configured</Application>
<Origin>*</Origin>
<PeerHostName>peer12</PeerHostName>
<PeerName>peer12</PeerName>
<PeerRealm>starentnetworks.com</PeerRealm>
<RouteType>Static</RouteType>
<RouteWeight>10</RouteWeight>
</AAADiameterRouteEntries>
<AAADiameterRouteEntries>
<Application>CC Not Configured</Application>
<Origin>*</Origin>
<PeerHostName>peer-5</PeerHostName>
<PeerName>peer-5</PeerName>
<PeerRealm>starentnetworks.com</PeerRealm>
<RouteType>Static</RouteType>
<RouteWeight>10</RouteWeight>
</AAADiameterRouteEntries>
<AAADiameterRouteHealthStatusEntries>
<AvailableCount>21</AvailableCount>
<FailedCount>0</FailedCount>
<OriginCount>21</OriginCount>
<PeerHostName></PeerHostName>
<PeerName>peer12</PeerName>
</AAADiameterRouteHealthStatusEntries>
<AAADiameterRouteHealthStatusEntries>
<AvailableCount>21</AvailableCount>
<FailedCount>0</FailedCount>
<OriginCount>21</OriginCount>
<PeerHostName>peer2</PeerHostName>
```

```
<PeerName>peer2</PeerName>
</AAADiameterRouteHealthStatusEntries>
<AAADiameterRouteHealthStatusEntries>
<AvailableCount>21</AvailableCount>
<FailedCount>0</FailedCount>
<OriginCount>21</OriginCount>
<PeerHostName></PeerHostName>
<PeerName>peer2</PeerName>
</AAADiameterRouteHealthStatusEntries>
<AAADiameterRouteHealthStatusEntries>
<AvailableCount>21</AvailableCount>
<FailedCount>0</FailedCount>
<OriginCount>21</OriginCount>
<PeerHostName>peer12</PeerHostName>
<PeerName>peer12</PeerName>
</AAADiameterRouteHealthStatusEntries>
<AAADiameterRouteHealthStatusEntries>
<AvailableCount>21</AvailableCount>
<FailedCount>0</FailedCount>
<OriginCount>21</OriginCount>
<PeerHostName></PeerHostName>
<PeerName>peer-5</PeerName>
</AAADiameterRouteHealthStatusEntries>
<AAADiameterRouteHealthStatusEntries>
<AvailableCount>21</AvailableCount>
<FailedCount>0</FailedCount>
<OriginCount>21</OriginCount>
<PeerHostName>peer-5</PeerHostName>
<PeerName>peer-5</PeerName>
</AAADiameterRouteHealthStatusEntries>
</ns2:vsData>
</ns2:attributes>
</ns2:VsDataContainer>
</ns11:AAADiameterEndpoint>
</ns2:vsData>
</ns2:attributes>
</ns2:VsDataContainer>
</ns2:ManagedFunction>
</ns15:InventoryUnit>

.
.
.
.
<!—GTPP Inventory -->


<ns2:ManagedFunction
id="{[ManagedElement(Key=SimulatedASR5K)][LogicalRoot][Context(ContextName
=haim)][Mobile][GTPPGroupContainer][GTPPGroup(GroupName=default)]}">
<ns2:VsDataContainer id="default-VsData1">
<ns2:attributes>
<ns2:vsDataType xsi:type="xs:string"
xmlns:xs="http://www.w3.org/2001/XMLSchema"
xmlns:xsi="http://www.w3.org/2001/XMLSchema-instance">class
com.cisco.prime.esb.tgpp.model.common.GtppProfile</ns2:vsDataType>
```

```
<ns2:vsDataFormatVersion xsi:type="xs:string"
xmlns:xs="http://www.w3.org/2001/XMLSchema"
xmlns:xsi="http://www.w3.org/2001/XMLSchema-
instance">CiscoSpecificAttributes.gtpp.1.0</ns2:vsDataFormatVersion>
<ns2:vsData xsi:type="ns4:vsDataCiscoSpecificMobileContainer"
xmlns:xsi="http://www.w3.org/2001/XMLSchema-instance">
<ns9:gtppProfile
id="{[ManagedElement(Key=SimulatedASR5K)][LogicalRoot][Context(ContextName
=haim)][Mobile][GTPPGroupContainer][GTPPGroup(GroupName=default)]}">
<ns9:attributes>
<ns9:userLabel>default</ns9:userLabel>
</ns9:attributes>
<ns2:VsDataContainer id="default-VsData1">
<ns2:attributes>
<ns2:vsDataType xsi:type="xs:string"
xmlns:xs="http://www.w3.org/2001/XMLSchema">GtppProfile</ns2:vsDataType>
<ns2:vsDataFormatVersion xsi:type="xs:string"
xmlns:xs="http://www.w3.org/2001/XMLSchema">CiscoSpecificAttributes.gtpp.1
.0</ns2:vsDataFormatVersion>
<ns2:vsData xsi:type="ns23:GTPPGroupType" xmlns:ns23="GTPPGroupType">
<AccountingServerFailureDetection>
<DeadServerSuppressCDRs>Disabled</DeadServerSuppressCDRs>
<DeadTime>
<interval>120 sec</interval>
</DeadTime>
<DetectDeadServerConsecutiveFailures>0</DetectDeadServerConsecutiveFailure
s>
<DuplicateHoldTimeMinutes>
<interval>60 min</interval>
</DuplicateHoldTimeMinutes>
<EchoMaxRetries>4</EchoMaxRetries>
<EchoTimeout>
<interval>60 sec</interval>
</EchoTimeout>
<RedirectionAllowed>yes</RedirectionAllowed>
</AccountingServerFailureDetection>
<CDRAttributesIndicator>
<ApnPresent>Enabled</ApnPresent>
<CamelInfo>Disabled</CamelInfo>
<CellPLMNId>Enabled</CellPLMNId>
<ChargingCharacteristicSelectionModePresent>Enabled</ChargingCharacteristi
cSelectionModePresent>
<DestinationNumber>Enabled</DestinationNumber>
<DiagnosticsPresent>Disabled</DiagnosticsPresent>
<Duration>Disabled</Duration>
<DynamicFlagPresent>Enabled</DynamicFlagPresent>
<ImeiPresent>Enabled</ImeiPresent>
<ListOfServiceDataPresent>Enabled</ListOfServiceDataPresent>
<LocalRecSeqNumPresent>Disabled</LocalRecSeqNumPresent>
<Msisdn>Enabled</Msisdn>
<NodeIDPresent>Enabled</NodeIDPresent>
<PdnConnectionIDPresent>Enabled</PdnConnectionIDPresent>
<PdpAddressPresent>Enabled</PdpAddressPresent>
<PdpTypePresent>Enabled</PdpTypePresent>
<PgwPLMNIDPresent>Enabled</PgwPLMNIDPresent>
<PlmnIDPresent>Enabled</PlmnIDPresent>
```

```
<Rat>Disabled</Rat>
<RatPresent>Enabled</RatPresent>
<RecordingEntity>Enabled</RecordingEntity>
<ServedMNAIPresent>Enabled</ServedMNAIPresent>
<ServedPDPPDNAddressExtensionPresent>Disabled</ServedPDPPDNAddressExtensio
nPresent>
<ServiceCentre>Enabled</ServiceCentre>
<StartTimePresent>Enabled</StartTimePresent>
<StopTimePresent>Enabled</StopTimePresent>
<UserLocationInformationPresent>Enabled</UserLocationInformationPresent>
</CDRAttributesIndicator>
<CDRTriggers>
<CellUpdate>Disabled</CellUpdate>
<DirectTunnel>Enabled</DirectTunnel>
<EgcdrMaxLosdvLimit>Disabled</EgcdrMaxLosdvLimit>
<InterPLMNSGSNChange>Enabled</InterPLMNSGSNChange>
<IntraSGSNGroupChange>Disabled</IntraSGSNGroupChange>
<MsTimezoneChange>Enabled</MsTimezoneChange>
<OnRATChangeGenerate>CDR</OnRATChangeGenerate>
<PlmnIDChange>Disabled</PlmnIDChange>
<QosChange>Enabled</QosChange>
<RatChange>Enabled</RatChange>
<RoutingAreaUpdate>Enabled</RoutingAreaUpdate>
<ServingNodeChangeLimit>Enabled</ServingNodeChangeLimit>
<TariffTimeChange>Enabled</TariffTimeChange>
<TimeLimit>Enabled</TimeLimit>
<VolumeLimit>Enabled</VolumeLimit>
</CDRTriggers>
<CdrMaxRetries>4</CdrMaxRetries>
<CdrStorageMode>remote</CdrStorageMode>
<CdrTimeout>
<interval>20 sec</interval>
</CdrTimeout>
<ChargingAgent>
<ChargingAgentAddress>
<internalAddress>0.0.0.0</internalAddress>
</ChargingAgentAddress>
</ChargingAgent>
<DataReqStartSeqNum>0</DataReqStartSeqNum>
<Dictionary>standard</Dictionary>
<EGCDRDataGenerationConfiguration>
<ClosingCauseUnique>no</ClosingCauseUnique>
<DeleteServiceThresholds>no</DeleteServiceThresholds>
<IncludeAllLosdvs>no</IncludeAllLosdvs>
<LosdvMaxContainers>10</LosdvMaxContainers>
<LotdvMaxContainers>8</LotdvMaxContainers>
<ServiceIdleTimeout>
<interval>0 sec</interval>
</ServiceIdleTimeout>
<ServiceInterval>
<interval>N/A</interval>
</ServiceInterval>
</EGCDRDataGenerationConfiguration>
<GroupName>default</GroupName>
<LocalStorage>
<FileCompression>none</FileCompression>
```

```
<FileFormat>custom1</FileFormat>
<FileRotationCDRCount>10000</FileRotationCDRCount>
<FileRotationTimeInterval>
<interval>3600 sec</interval>
</FileRotationTimeInterval>
<FileRotationVolumeLimit>4</FileRotationVolumeLimit>
<ForceFileRotationByTimeInterval>Disabled</ForceFileRotationByTimeInterval
>
<PurgeProcessedFiles>Disabled</PurgeProcessedFiles>
</LocalStorage>
<MBMSCDRTriggers>
<Buckets>4</Buckets>
<Interval>
<interval>N/A</interval>
</Interval>
</MBMSCDRTriggers>
<MaxCDRSinMsg>1</MaxCDRSinMsg>
<MaxCDRSize>65400</MaxCDRSize>
<MaxCDRsWaitTime>
<interval>N/A</interval>
</MaxCDRsWaitTime>
<RecoverFileSeqNum>No</RecoverFileSeqNum>
<SourcePortValidation>Enabled</SourcePortValidation>
<StartFileSeqNum>1</StartFileSeqNum>
<StorageServer>
<StorageServerAddress>
<internalAddress>6.6.6.6</internalAddress>
</StorageServerAddress>
<StorageServerMaxRetries>2</StorageServerMaxRetries>
<StorageServerPort>44</StorageServerPort>
<StorageServerTimeout>
<interval>30 sec</interval>
</StorageServerTimeout>
</StorageServer>
</ns2:vsData>
</ns2:attributes>
</ns2:VsDataContainer>
</ns9:gtppProfile>
</ns2:vsData>
</ns2:attributes>
</ns2:VsDataContainer>
</ns2:ManagedFunction>
</ns15:InventoryUnit>

.
.
.
.
<!—Operator Policy Inventory -->

<ns2:ManagedFunction
id="{[ManagedElement(Key=SimulatedASR5K)][LogicalRoot][Context(ContextName
=local)][Mobile][PolicyContainer][OperatorPolicyContainer][OperatorPolicy(
OperatorPolicyName=t4demo)]}">
<ns2:VsDataContainer id="t4demo-VsData1">
<ns2:attributes>
```

```
<ns2:vsDataType xsi:type="xs:string"
xmlns:xs="http://www.w3.org/2001/XMLSchema"
xmlns:xsi="http://www.w3.org/2001/XMLSchema-instance">class
com.cisco.prime.esb.tgpp.model.common.PolicyProfile</ns2:vsDataType>
<ns2:vsDataFormatVersion xsi:type="xs:string"
xmlns:xs="http://www.w3.org/2001/XMLSchema"
xmlns:xsi="http://www.w3.org/2001/XMLSchema-
instance">CiscoSpecificAttributes.policy.1.0</ns2:vsDataFormatVersion>
<ns2:vsData xsi:type="ns4:vsDataCiscoSpecificMobileContainer"
xmlns:xsi="http://www.w3.org/2001/XMLSchema-instance">
<ns12:PolicyProfile
id="{[ManagedElement(Key=SimulatedASR5K)][LogicalRoot][Context(ContextName
=local)][Mobile][PolicyContainer][OperatorPolicyContainer][OperatorPolicy(
OperatorPolicyName=t4demo)]}">
<ns12:attributes>
<ns12:userLabel>t4demo</ns12:userLabel>
</ns12:attributes>
<ns2:VsDataContainer id="t4demo-VsData1">
<ns2:attributes>
<ns2:vsDataType xsi:type="xs:string"
xmlns:xs="http://www.w3.org/2001/XMLSchema">PolicyProfile</ns2:vsDataType>
<ns2:vsDataFormatVersion xsi:type="xs:string"
xmlns:xs="http://www.w3.org/2001/XMLSchema">CiscoSpecificAttributes.policy
.1.0</ns2:vsDataFormatVersion>
<ns2:vsData xsi:type="ns23:OperatorPolicyType"
xmlns:ns23="OperatorPolicyType">
<ApnRemapTableName>{[ManagedElement(Key=SimulatedASR5K)][LogicalRoot][Cont
ext(ContextName=local)][Mobile][ProfilesContainer][APNRemapContainer][APNR
emap(ApnRemapName=t4demo)]}</ApnRemapTableName>
<CallControlProfileName>t4demo</CallControlProfileName>
<DefaultAPNProfileName>{[ManagedElement(Key=SimulatedASR5K)][LogicalRoot][
Context(ContextName=local)][Mobile][ProfilesContainer][APNProfileContainer
][APNProfile(ApnProfileName=t4demo)]}</DefaultAPNProfileName>
<OperatorPolicyAPNEntries>
<NetworkIdentifier>t4demo</NetworkIdentifier>
<NetworkIdentifierAPNProfileName>{[ManagedElement(Key=SimulatedASR5K)][Log
icalRoot][Context(ContextName=local)][Mobile][ProfilesContainer][APNProfil
eContainer][APNProfile(ApnProfileName=t4demo)]}</NetworkIdentifierAPNProfi
leName>
<OperatorIdentifier> </OperatorIdentifier>
</OperatorPolicyAPNEntries>
<OperatorPolicyDescription>"demo"</OperatorPolicyDescription>
<OperatorPolicyIMEIRangesEntries>
<ProfileName>t4demo</ProfileName>
<StartRange>120</StartRange>
<ToRange>125</ToRange>
</OperatorPolicyIMEIRangesEntries>
<OperatorPolicyName>t4demo</OperatorPolicyName>
</ns2:vsData>
</ns2:attributes>
</ns2:VsDataContainer>
</ns12:PolicyProfile>
</ns2:vsData>
</ns2:attributes>
</ns2:VsDataContainer>
</ns2:ManagedFunction>
```

```
</ns15:InventoryUnit>


<!—SGSN Inventory Item -->

<ns3:InventoryUnit
id="{[ManagedElement(Key=ASR5K)][LogicalRoot][Context(ContextName=local)][
Mobile][SGSNContainer][SGSNService(ServiceName=sgsn1)]}">
<ns3:attributes>
  <ns3:inventoryUnitType>Software Unit Data</ns3:inventoryUnitType>
  <ns3:vendorName>Cisco</ns3:vendorName>
</ns3:attributes>
<ns2:ManagedFunction
id="{[ManagedElement(Key=ASR5K)][LogicalRoot][Context(ContextName=local)][
Mobile][SGSNContainer][SGSNService(ServiceName=sgsn1)]}">
  <ns2:VsDataContainer id="sgsn1-VsData1">
<ns2:attributes>
  <ns2:vsDataType xsi:type="xs:string">class
com.cisco.prime.esb.tgpp.model.common.SgsnFunction</ns2:vsDataType>
  <ns2:vsDataFormatVersion
xsi:type="xs:string">CiscoSpecificAttributes.sgsn.1.0</ns2:vsDataFormatVer
sion>
  <ns2:vsData xsi:type="ns5:vsDataCiscoSpecificMobileContainer">
<ns6:SgsnFunction
id="{[ManagedElement(Key=ASR5K)][LogicalRoot][Context(ContextName=local)][
Mobile][SGSNContainer][SGSNService(ServiceName=sgsn1)]}">
  <ns6:attributes>
<ns6:userLabel>sgsn1</ns6:userLabel>
<ns6:mccList>
  <ns5:em>223</ns5:em>
  <ns5:em>234</ns5:em>
  <ns5:em>992</ns5:em>
</ns6:mccList>
<ns6:mncList>
  <ns5:em>14614753</ns5:em>
  <ns5:em>15335880</ns5:em>
  <ns5:em>65012035</ns5:em>
</ns6:mncList>
<ns6:lacList>
  <ns5:em>1005052231684</ns5:em>
  <ns5:em>4260628725771</ns5:em>
</ns6:lacList>
<ns6:racList>
  <ns5:em>257293371311149</ns5:em>
  <ns5:em>257293371311138</ns5:em>
  <ns5:em>257293371311127</ns5:em>
  <ns5:em>257293371311160</ns5:em>
  <ns5:em>257293371311171</ns5:em>
  <ns5:em>257293371311116</ns5:em>
  <ns5:em>1090720953797398</ns5:em>
  <ns5:em>1090720953797387</ns5:em>
  <ns5:em>1090720953797409</ns5:em>
  <ns5:em>1090720953797377</ns5:em>
</ns6:racList>
<ns6:sacList/>
<ns6:sgsnId>-1</ns6:sgsnId>
```

```
<ns6:sgsnFunctionGsmCell/>
<ns6:sgsnFunctionExternalGsmCell/>
<ns6:sgsnFunctionSgsnPool/>
<ns6:nriList>
  <ns5:em>0</ns5:em>
</ns6:nriList>
  </ns6:attributes>
  <ns2:VsDataContainer id="sgsn1-VsData1">
<ns2:attributes>
  <ns2:vsDataType xsi:type="xs:string">sgsnFunction</ns2:vsDataType>
  <ns2:vsDataFormatVersion
xsi:type="xs:string">CiscoSpecificAttributes.sgsn.1.0</ns2:vsDataFormatVer
sion>
  <ns2:vsData xsi:type="ns20:SGSNServiceType">
<AccountingCdrTypes>
  <data>[MCDR, SMS MO_CDR, SMS MT_CDR, Unknown]</data>
</AccountingCdrTypes>
<AccountingContext>{[ManagedElement(Key=ASR5K)][LogicalRoot][Context(Conte
xtName=local)]}</AccountingContext>
<ClearSubscriptionData>Enabled</ClearSubscriptionData>
<DetachTypeIE>Reattach-Not-Required</DetachTypeIE>
<DnsIsrauMccMncEncoding>Decimal</DnsIsrauMccMncEncoding>
<GfFailureAction>Reject</GfFailureAction>
<GfTimeoutAction>Reject</GfTimeoutAction>
<Intervals>
  <IGGSNChargingCharacteristicsIntervalTableEntry>
<ProfileId>0</ProfileId>
  </IGGSNChargingCharacteristicsIntervalTableEntry>
  <IGGSNChargingCharacteristicsIntervalTableEntry>
<ProfileId>1</ProfileId>
  </IGGSNChargingCharacteristicsIntervalTableEntry>
  <IGGSNChargingCharacteristicsIntervalTableEntry>
<ProfileId>2</ProfileId>
  </IGGSNChargingCharacteristicsIntervalTableEntry>

</Intervals>
<MaxPdpContexts>11</MaxPdpContexts>
<OverridedLACforLI>0xff</OverridedLACforLI>
<Profiles>
  <IGGSNChargingCharacteristicsProfilesTableEntry>
<Buckets>4</Buckets>
<Profile>0</Profile>
  </IGGSNChargingCharacteristicsProfilesTableEntry>
  <IGGSNChargingCharacteristicsProfilesTableEntry>
<Buckets>4</Buckets>
<Profile>1</Profile>
  </IGGSNChargingCharacteristicsProfilesTableEntry>

</Profiles>
<QosModification>Disabled</QosModification>
<ReportingActionEventRecord>Disabled</ReportingActionEventRecord>
<SGSNGPRSMobilityManagement>
  <ImplicitDetachTimeout>3600 sec</ImplicitDetachTimeout>
  <MaxAuthRetries>4</MaxAuthRetries>
  <MaxIdentityRetries>4</MaxIdentityRetries>
  <MaxPTMSIRelocRetries>5</MaxPTMSIRelocRetries>
```

```
  <MaxPageRetries>5</MaxPageRetries>
  <MobilReachableTimeout>58 min</MobilReachableTimeout>
  <PerformIdentityAfterAuth>Enabled</PerformIdentityAfterAuth>
  <PurgeTimeout>10080 min</PurgeTimeout>
  <T3302Timeout>12 min</T3302Timeout>
  <T3312Timeout>54 min</T3312Timeout>
  <T3313Timeout>5 sec</T3313Timeout>
  <T3322Timeout>6 sec</T3322Timeout>
  <T3323Timeout>54 min</T3323Timeout>
  <T3350Timeout>6 sec</T3350Timeout>
  <T3360Timeout>6 sec</T3360Timeout>
  <T3370Timeout>6 sec</T3370Timeout>
  <TrauTimeout>30 sec</TrauTimeout>
</SGSNGPRSMobilityManagement>
<SGSNNRIProperties>
  <NriLength>6</NriLength>
</SGSNNRIProperties>
<SGSNNRIValuesEntries>
  <ISGSNNRIValuesEntry>
<Activating>Off</Activating>
<Connecting>Off</Connecting>
<NriValue>0</NriValue>
  </ISGSNNRIValuesEntry>
</SGSNNRIValuesEntries>
<SGSNSessionManagmentProperties>
  <GuardTimeout>80 sec</GuardTimeout>
  <MaxActivateRetries>4</MaxActivateRetries>
  <MaxDeactivateRetries>4</MaxDeactivateRetries>
  <MaxModifyRetries>4</MaxModifyRetries>
  <T3385Timeout>8 sec</T3385Timeout>
  <T3386Timeout>8 sec</T3386Timeout>
  <T3395Timeout>8 sec</T3395Timeout>
</SGSNSessionManagmentProperties>
<SgsnStatus>Not Started</SgsnStatus>
<Tariffs>
  <IGGSNChargingCharacteristicsTariffTableEntry>
<ProfileId>0</ProfileId>
  </IGGSNChargingCharacteristicsTariffTableEntry>
  <IGGSNChargingCharacteristicsTariffTableEntry>
<ProfileId>1</ProfileId>
  </IGGSNChargingCharacteristicsTariffTableEntry>

</Tariffs>
  </ns2:vsData>
</ns2:attributes>
  </ns2:VsDataContainer>
</ns6:SgsnFunction>
  </ns2:vsData>
</ns2:attributes>
  </ns2:VsDataContainer>
</ns2:ManagedFunction>
</ns3:InventoryUnit>


<!—MME Inventory Item -->
```

<ns3:InventoryUnit
id="{[ManagedElement(Key=ASR5K_54)][LogicalRoot][Context(ContextName=LTE)][Mobile][MMEContainer][
MMEService(ServiceName=mmert)]}">
<ns3:attributes>
<ns3:inventoryUnitType>Software Unit Data</ns3:inventoryUnitType>
<ns3:vendorName>Cisco</ns3:vendorName>
</ns3:attributes>
<ns2:ManagedFunction
id="{[ManagedElement(Key=ASR5K_54)][LogicalRoot][Context(ContextName=LTE)][Mobile][MMEContainer][
MMEService(ServiceName=mmert)]}">
<ns2:VsDataContainer id="mmert-VsData1">
<ns2:attributes>
<ns2:vsDataType xsi:type="xs:string" xmlns:xs="http://www.w3.org/2001/XMLSchema"
xmlns:xsi="http://www.w3.org/2001/XMLSchema-instance">class
com.cisco.prime.esb.tgpp.model.common.MMEFunction</ns2:vsDataType>
<ns2:vsDataFormatVersion xsi:type="xs:string" xmlns:xs="http://www.w3.org/2001/XMLSchema"
xmlns:xsi="http://www.w3.org/2001/XMLSchema-
instance">CiscoSpecificAttributes.mme.1.0</ns2:vsDataFormatVersion>
<ns2:vsData xsi:type="ns5:vsDataCiscoSpecificMobileContainer"
xmlns:xsi="http://www.w3.org/2001/XMLSchema-instance">
<ns4:MMEFunction
id="{[ManagedElement(Key=ASR5K_54)][LogicalRoot][Context(ContextName=LTE)][Mobile][MMEContainer][
MMEService(ServiceName=mmert)]}">
<ns4:attributes>
<ns4:userLabel>mmert</ns4:userLabel>
<ns4:pLMNIdList>
<ns5:pLMNId>
<ns5:mcc>111</ns5:mcc>
<ns5:mNc>999</ns5:mNc>
</ns5:pLMNId>
</ns4:pLMNIdList>
<ns4:mMEC>249</ns4:mMEC>
<ns4:mMEPool>65535</ns4:mMEPool>
</ns4:attributes>
<ns2:VsDataContainer id="mmert-VsData1">
<ns2:attributes>
<ns2:vsDataType xsi:type="xs:string"
xmlns:xs="http://www.w3.org/2001/XMLSchema">mmeFunction</ns2:vsDataType>
<ns2:vsDataFormatVersion xsi:type="xs:string"
xmlns:xs="http://www.w3.org/2001/XMLSchema">CiscoSpecificAttributes.mme.1.0</ns2:vsDataFormatVersi
on>
<ns2:vsData xsi:type="ns20:MMEServiceType" xmlns:ns20="MMEServiceType">
<CallSetupTimeout>60 sec</CallSetupTimeout>
<ENodeBCacheTimeout>1440 min</ENodeBCacheTimeout>
<EPSMobilityManagementTimeouts>
<ImplicitDetachTimeout>11160 sec</ImplicitDetachTimeout>
<MobileReachableTimeout>11160 sec</MobileReachableTimeout>
<T3412Timeout>12 sec</T3412Timeout>
<T3413Timeout>20 sec</T3413Timeout>
<T3422Timeout>20 sec</T3422Timeout>
<T3423Timeout>12 sec</T3423Timeout>
<T3450Timeout>20 sec</T3450Timeout>

```
   <T3460Timeout>20 sec</T3460Timeout>
   <T3470Timeout>20 sec</T3470Timeout>
</EPSMobilityManagementTimeouts>
<EPSSessionManagementTimeouts>
   <T3485Timeout>60 sec</T3485Timeout>
   <T3486Timeout>60 sec</T3486Timeout>
   <T3489Timeout>60 sec</T3489Timeout>
   <T3495Timeout>60 sec</T3495Timeout>
</EPSSessionManagementTimeouts>
<GlobalMMEIDMgmtDB>Associated</GlobalMMEIDMgmtDB>
<Gtpv2PiggyBagging>Disabled</Gtpv2PiggyBagging>
<HssPeerService>hssrt@wireless</HssPeerService>
<LTESecurityProcedures>
   <EncryptionAlgorithmPriority1>128-eea0</EncryptionAlgorithmPriority1>
   <EncryptionAlgorithmPriority2>128-eea1</EncryptionAlgorithmPriority2>
   <EncryptionAlgorithmPriority3>128-eea2</EncryptionAlgorithmPriority3>
   <IntegrityAlgorithmPriority1>128-eia1</IntegrityAlgorithmPriority1>
   <IntegrityAlgorithmPriority2>128-eia2</IntegrityAlgorithmPriority2>
</LTESecurityProcedures>
<LocationReporting>Enabled</LocationReporting>
<LteEmergencyProfile>lteeprt</LteEmergencyProfile>
<MMEPGWAddressEntries>
   <IMMEPGWAddressEntry>
<IpAddress>123:0:0:0:0:0:0:123</IpAddress>
<S5s8Protocol>P-MIP</S5s8Protocol>
<Weight>77</Weight>
   </IMMEPGWAddressEntry>
   <IMMEPGWAddressEntry>
<IpAddress>1:0:0:0:0:0:0:2</IpAddress>
<S5s8Protocol>P-MIP</S5s8Protocol>
<Weight>99</Weight>
   </IMMEPGWAddressEntry>
</MMEPGWAddressEntries>
<MMEPolicy>
   <PolicyAttach>
<AllowOnECATimeout>Enabled</AllowOnECATimeout>
<DenyGreyListed>Disabled</DenyGreyListed>
<DenyUnknown>Disabled</DenyUnknown>
<EirQuery>Enabled</EirQuery>
<ImeiQueryType>imei</ImeiQueryType>
<SetUETime>Disabled</SetUETime>
<VerifyEmergency>Disabled</VerifyEmergency>
   </PolicyAttach>
   <PolicyIdleModeDetach>implicit</PolicyIdleModeDetach>
   <PolicyInterRatIgnoreSGSNContextID>Enabled</PolicyInterRatIgnoreSGSNContextID>
   <PolicyInterRatTunnels>Enabled</PolicyInterRatTunnels>
   <PolicyNetworkDualAddr>Enabled</PolicyNetworkDualAddr>
   <PolicyOverload>drop</PolicyOverload>
   <PolicyPDNReconnection>multiple</PolicyPDNReconnection>
   <PolicyS1Reset>detach-ue</PolicyS1Reset>
   <PolicySCTPDown>detach-ue</PolicySCTPDown>
   <PolicyTAU>
```

<AllowOnECATimeout>Disabled</AllowOnECATimeout>
<DenyGreyListed>Disabled</DenyGreyListed>
<DenyUnknown>Disabled</DenyUnknown>
<EirQuery>Disabled</EirQuery>
<ImeiQueryType>imei-sv</ImeiQueryType>
<SetUETime>Enabled</SetUETime>
<VerifyEmergency>Disabled</VerifyEmergency>
</PolicyTAU>
</MMEPolicy>
<MaxBearerPerSubscriber>1</MaxBearerPerSubscriber>
<MaxPDNsPerSubscriber>1</MaxPDNsPerSubscriber>
<MaxPagingAttempt>1</MaxPagingAttempt>
<MmeGroupId>65535</MmeGroupId>
<MmeManagerRecovery>No Reset</MmeManagerRecovery>
<MmeOffloading>Disabled</MmeOffloading>
<MmeStatus>Not Started</MmeStatus>
<NRILengthEntries>
<INRILengthEntry>
<Length>1</Length>
<PlmnId>
<mcc>111</mcc>
<mnc>999</mnc>
</PlmnId>
</INRILengthEntry>
<INRILengthEntry>
<Length>2</Length>
<PlmnId>
<mcc>222</mcc>
<mnc>888</mnc>
</PlmnId>
</INRILengthEntry>
<INRILengthEntry>
<Length>3</Length>
<PlmnId>
<mcc>333</mcc>
<mnc>777</mnc>
</PlmnId>
</INRILengthEntry>
</NRILengthEntries>
<NasMaxRetransmission>9</NasMaxRetransmission>
<NewcallPolicy>None</NewcallPolicy>
<PeerMMEDNSContext>{[ManagedElement(Key=ASR5K_54)][LogicalRoot][Context(ContextName=wireless)]}
</PeerMMEDNSContext>
<PeerMMEGUMMEIEntries>
<IPeerMMEGUMMEIEntry>
<GroupId>6444</GroupId>
<IpAddress>1.2.3.44</IpAddress>
<MmeCode>244</MmeCode>
<PlmnId>
<mcc>123</mcc>
<mnc>987</mnc>
</PlmnId>

```
   </IPeerMMEGUMMEIEntry>
</PeerMMEGUMMEIEntries>
<PeerSGSNDNSContext>{[ManagedElement(Key=ASR5K_54)][LogicalRoot][Context(ContextName=wireless)]}
</PeerSGSNDNSContext>
<PeerSGSNRAIEntries>
   <IPeerSGSNRAIEntry>
<GnInterface>Enabled</GnInterface>
<GpInterface>Enabled</GpInterface>
<IpAddress>11.2.3.4</IpAddress>
<Lac>444</Lac>
<Nri>0</Nri>
<PlmnId>
   <mcc>444</mcc>
   <mnc>444</mnc>
</PlmnId>
<Rac>44</Rac>
<S16Interface>Enabled</S16Interface>
<S3Interface>Enabled</S3Interface>
   </IPeerSGSNRAIEntry>
</PeerSGSNRAIEntries>
<PgwDNSContext>{[ManagedElement(Key=ASR5K_54)][LogicalRoot][Context(ContextName=wireless)]}</Pgw
DNSContext>
<RelativeCapacity>233</RelativeCapacity>
<S1Interface>

<CryptoTemplate>{[ManagedElement(Key=ASR5K_54)][LogicalRoot][Context(ContextName=LTE)][SecurityAs
sociationContainer][CryptoTemplateContainer][CryptoTemplate(TemplateName=ctrt1)]}</CryptoTemplate>
   <MaxSubscribers>12000000</MaxSubscribers>
   <PrimaryIPAddress>255.255.255.255</PrimaryIPAddress>
   <QosDSCP>AF12 (001 100)</QosDSCP>
   <S1InterfaceConnectedTrap>Enabled</S1InterfaceConnectedTrap>
   <SctpPortNum>65535</SctpPortNum>
   <SecondaryIPAddress>1.2.3.4</SecondaryIPAddress>
</S1Interface>
<SctpParamTemplate>{[ManagedElement(Key=ASR5K_54)][LogicalRoot][Context(ContextName=local)][Gene
ricProfilesContainer][SCTPTemplateContainer][SCTPTemplate(SCTPTemplateName=sctprt)]}</SctpParamTem
plate>
<SgtpcService>sgtpcrt@wireless</SgtpcService>
<SgwDNSContext>{[ManagedElement(Key=ASR5K_54)][LogicalRoot][Context(ContextName=wireless)]}</Sgw
DNSContext>
<SubscriberMap>submaprt</SubscriberMap>
<UeDBPurgeTimeout>20160 min</UeDBPurgeTimeout>
   </ns2:vsData>
</ns2:attributes>
   </ns2:VsDataContainer>
</ns4:MMEFunction>
   </ns2:vsData>
</ns2:attributes>
   </ns2:VsDataContainer>
</ns2:ManagedFunction>
</ns3:InventoryUnit>
.
```

.
.
.
<InventoryUnit>

11.3 3GPP Detailed Inventory Information

This section includes:

- Physical Inventory attributes
- Logical Inventory attributes

11.3.1 Physical Inventory attributes

This section lists the physical inventory attributes for:

- Managed Element
- Chassis
- Card
- Slot
- Port
- Sub-Port
- Power
- Fan

Table 11-1: Physical Inventory Attributes for Managed Element

Attribute name	3GPP Prescribed Support Qualifier	3GPP Prescribed Read Qualifier	3GPP Prescribed Write Qualifier
Id	M	M	-
inventoryUnitType	M	M	-
vendorName	M	M	-
vendorUnitFamilyType	CM	M	-
vendorUnitTypeNumber	CM	M	-
serialNumber	CM	M	-
versionNumber	O	M	-
dateOfManufacture	O	M	-
dateOfLastService	O	M	-
unitPosition	O	M	-
manufacturerData	O	M	-
relatedFunction	O	M	-

Table 11-2: Physical Inventory Attribute for Chassis

Attribute name	3GPP Prescribed Support Qualifier	3GPP Prescribed Read Qualifier	3GPP Prescribed Write Qualifier
Id	M	M	-
inventoryUnitType	M	M	-
vendorName	M	M	-
vendorUnitFamilyType	CM	M	-
vendorUnitTypeNumber	CM	M	-
serialNumber	CM	M	-
versionNumber	O	M	-
dateOfManufacture	O	M	-
dateOfLastService	O	M	-
unitPosition	O	M	-
manufacturerData	O	M	-
relatedFunction	O	M	-

Table 11-3: Physical Inventory Attribute for Card

Attribute name	3GPP Prescribed Support Qualifier	3GPP Prescribed Read Qualifier	3GPP Prescribed Write Qualifier
Id	M	M	-
inventoryUnitType	M	M	-
vendorName	M	M	-
vendorUnitFamilyType	CM	M	-
vendorUnitTypeNumber	CM	M	-
serialNumber	CM	M	-
versionNumber	O	M	-
dateOfManufacture	O	M	-
dateOfLastService	O	M	-
unitPosition	O	M	-
manufacturerData	O	M	-
relatedFunction	O	M	-

Table 11-4: Physical Inventory Attribute for Slot

Attribute name	3GPP Prescribed Support Qualifier	3GPP Prescribed Read Qualifier	3GPP Prescribed Write Qualifier
Id	M	M	-

inventoryUnitType	M	M	-
vendorName	M	M	-
vendorUnitFamilyType	CM	M	-
vendorUnitTypeNumber	CM	M	-
serialNumber	CM	M	-
versionNumber	O	M	-
dateOfManufacture	O	M	-
dateOfLastService	O	M	-
unitPosition	O	M	-
manufacturerData	O	M	-
relatedFunction	O	M	-

Table 11-5: Physical Inventory Attribute for Port

Attribute name	3GPP Prescribed Support Qualifier	3GPP Prescribed Read Qualifier	3GPP Prescribed Write Qualifier
Id	M	M	-
inventoryUnitType	M	M	-
vendorName	M	M	-
vendorUnitFamilyType	CM	M	-
vendorUnitTypeNumber	CM	M	-
serialNumber	CM	M	-
versionNumber	O	M	-
dateOfManufacture	O	M	-
dateOfLastService	O	M	-
unitPosition	O	M	-
manufacturerData	O	M	-
relatedFunction	O	M	-

Table 11-6: Physical Inventory Attribute for Sub-port

Attribute name	3GPP Prescribed Support Qualifier	3GPP Prescribed Read Qualifier	3GPP Prescribed Write Qualifier
Id	M	M	-
inventoryUnitType	M	M	-
vendorName	M	M	-
vendorUnitFamilyType	CM	M	-
vendorUnitTypeNumber	CM	M	-
serialNumber	CM	M	-
versionNumber	O	M	-

dateOfManufacture	O	M	-
dateOfLastService	O	M	-
unitPosition	O	M	-
manufacturerData	O	M	-
relatedFunction	O	M	-

Table 11-7: Physical Inventory Attribute for Power

Attribute name	3GPP Prescribed Support Qualifier	3GPP Prescribed Read Qualifier	3GPP Prescribed Write Qualifier
Id	M	M	-
inventoryUnitType	M	M	-
vendorName	M	M	-
vendorUnitFamilyType	CM	M	-
vendorUnitTypeNumber	CM	M	-
serialNumber	CM	M	-
versionNumber	O	M	-
dateOfManufacture	O	M	-
dateOfLastService	O	M	-
unitPosition	O	M	-
manufacturerData	O	M	-
relatedFunction	O	M	-

Table 11-8: Physical Inventory Attribute for Fan

Attribute name	3GPP Prescribed Support Qualifier	3GPP Prescribed Read Qualifier	3GPP Prescribed Write Qualifier
Id	M	M	-
inventoryUnitType	M	M	-
vendorName	M	M	-
vendorUnitFamilyType	CM	M	-
vendorUnitTypeNumber	CM	M	-
serialNumber	CM	M	-
versionNumber	O	M	-
dateOfManufacture	O	M	-
dateOfLastService	O	M	-
unitPosition	O	M	-
manufacturerData	O	M	-
relatedFunction	O	M	-

11.3.2 Logical Inventory attributes

This section lists the logical inventory attributes for:

- PGW
  - Logical Inventory Attribute for PGW
  - Vendor Extensions for PGW
- SGW
  - Logical Inventory Attribute for SGW
  - Vendor Extensions for SGW
- APN
  - Logical Inventory Attribute for APN
  - Vendor Extension for APN
- SAEGW
  - Logical Inventory Attribute for SAEGW
  - Vendor Extensions for SAEGW
- GGSN
  - Logical Inventory Attribute for GGSN
  - Vendor Extension for GGSN
- ACS
  - Logical Inventory Attribute for ACS
  - Vendor Extension for ACS
- AAA
  - Logical Inventory Attribute for AAA
  - Vendor Extension for AAAGroup
- GTPP
  - Logical Inventory Attribute for GTPP
  - Vendor Extension for GTPP
- Operator Policy
  - Logical Inventory Attribute for Operator Policy

  - Vendor Extension for Operator Policy
- SGSN
  - Logical Inventory Attribute for Operator Policy

- Vendor Extension for Operator Policy MME
    - Logical Inventory Attribute for Operator Policy

- Vendor Extension for Operator Policy

11.3.2.1 *Logical Inventory Attribute for PGW*

Table 11-9: Logical Attribute for PGW

Attribute name	3GPP Prescribed Support Qualifier	3GPP Prescribed Read Qualifier	3GPP Prescribed Write Qualifier
Id	M	M	-
inventoryUnitType	M	M	-
vendorName	M	M	-
vendorUnitFamilyType	CM	M	-
vendorUnitTypeNumber	CM	M	-
serialNumber	CM	M	-
versionNumber	O	M	-
dateOfManufacture	O	M	-
dateOfLastService	O	M	-
unitPosition	O	M	-
manufacturerData	O	M	-
relatedFunction	O	M	-
ManagedFunction			
Id			
PGWFunction			
Id			
userLabel			
linkList			

11.3.2.1.1 Vendor Extensions for PGW

- PgwStatus
- NewcallPolicy
- EgtpService
- LmaService
- GgsnService
- QciQosMappingTable
- SessionDeleteDelayTimeout
- SaeGwService
- PgwStatus

11.3.2.2 *Logical Inventory Attribute for SGW*

Table 11-10: Logical Attribute for SGW

Attribute name	3GPP Prescribed Support Qualifier	3GPP Prescribed Read Qualifier	3GPP Prescribed Write Qualifier
Id	M	M	-
inventoryUnitType	M	M	-
vendorName	M	M	-
vendorUnitFamilyType	CM	M	-
vendorUnitTypeNumber	CM	M	-
serialNumber	CM	M	-
versionNumber	O	M	-
dateOfManufacture	O	M	-
dateOfLastService	O	M	-
unitPosition	O	M	-
manufacturerData	O	M	-
relatedFunction	O	M	-
ManagedFunction			
Id			
ServingGWFunction			
userLabel			
PLMNIdList			
TACList			

11.3.2.2.1 Vendor Extensions for SGW

- AccountingContext
- AccountingGtppGroup
- AccountingMode
- EgressProtocol
- EgressContext
- EgressMagService
- ImsAuthorizationService
- AccountingPolicy
- ServiceStatus
- SaeGwService
- NewcallPolicy

11.3.2.3 *Logical Inventory Attribute for APN*

Table 11-11: Logical Attribute for APN

Attribute name	3GPP Prescribed Support Qualifier	3GPP Prescribed Read Qualifier	3GPP Prescribed Write Qualifier
Id	M	M	-
inventoryUnitType	M	M	-
vendorName	M	M	-
vendorUnitFamilyType	CM	M	-
vendorUnitTypeNumber	CM	M	-
serialNumber	CM	M	-
versionNumber	O	M	-
dateOfManufacture	O	M	-
dateOfLastService	O	M	-
unitPosition	O	M	-
manufacturerData	O	M	-
relatedFunction	O	M	-
ManagedFunction			
Id			
APN			
Id			
userLabel			

11.3.2.3.1 Vendor Extension for APN

- AccountingMode
- SelectionMode
- L3toL2AddressPolicy
- AllocationType
- DnsConfiguration
- Id
- PrimaryDnsAddress
- Secondarty DnsAddress
- IpHeaderCompression
- PDP
- Id
- PdpType
- PrimaryContexts
- TotoalContexts
- RadiusServerConfiguration
- Id
- RadiusGroup
- RadiusSecondaryGroup

- ReturnedFramedIpAddressPolicy
- ReturnedUserNamePolicy
- MediationDevice
  - Id
  - DelayGTPResponse
  - NoEarlyPDU
  - NoInterims
  - Accounting
- NetBIOS
  - Id
  - PrimaryNBNSAddress
  - SecondaryNBNSAddress
- ApnTunnel
  - Id
  - AddressPolicy
  - PeerLoadBalancing
- Timeout
  - Id
  - AbsoluteTimeout
  - LongDurationTimeout
  - BearerInactivityTimeout
  - BearerInactivityVolumeThresholdTotal
  - EmergencyInactivityTimeout
  - IdleTimeout
  - IdleTimeoutActivityIgnoreDownlink
  - Ipv6InitRouterSolicitWaitTimeout
  - LongDurationAction
  - LongDurationInactivityTimeout
  - MbmsBearerAbsoluteTimeout
  - MbmsBearerIdleTimeout
  - MbmsUeAbsoluteTimeout
- Dhcp
  - Id
  - DhcpLeaseExpirationPolicy
  - DhcpServiceName
- PPPProfile
  - Id
  - AuthenticationMode
  - DataCompressionMode
  - DataCompressionProtocols
  - Protocols
  - KeepAlivePeriod
  - MinCompressionSize
  - Mtu
- ApnlpParameters
  - id

    - Access Group
    - Local Address
    - NextHopGatewayAddress
    - OutAccessGroup
    - DiscardEnabled
- ApnChargingCharacteristics
    - Id
    - AllBitBehavior
    - HomeBitBehavior
    - RoamingBitBehavior
    - VisitingBitBehavior
    - RadiusReturned
    - AllProfile
    - HomeProfile
    - RoamingProfile
    - VisitingProfile
    - UseGgsn
- GSMQoS
    - Id
    - ResidualBERCode
    - SDUErrorRatioCode
- NewcallPolicy
    - MobileIP
        - Id
        - MnAAARemovalIndication
        - MnHaHashAlgorithm
        - MnHaSharedKey
        - MnHaSPI
        - AlternateHA
        - HA
- APNIPv6
    - Id
    - AddressPrefixPoolName
    - DNSPrimaryAddress
    - DNSSecondaryAddress
    - EgressAddressFiltering
    - InboundAccessGroupName
    - OutboundAccessGroupName
    - InitialRouterAdvertisementInterval
    - InitialRouterAdvertisementNumber

- VirtualAPNs
    - id
    - RuleDefinition
    - RuleType
    - QciToDscp
    - QciArpToDscp

- Gtpp
  - Id
  - AccountingContext
  - AccountingContextName
  - Group
  - GroupType
  - GroupXid
- APNQoSDownlinkTrafficPolicingEntries
  - ID
  - BurstSizeAutoReadjust
  - BurstSizeAutoReadjustDuration
  - CommittedDataRate
  - ExceedAction
  - GuaranteedBurstSize
  - NegotiateLimit
  - PeakBurstSize
  - PeakDataRate
  - QciName
  - RateLimit
  - ViolateAction
- APNQoSUplinkTrafficPolicingEntries
  - ID
  - BurstSizeAutoReadjust
  - BurstSizeAutoReadjustDuration
  - CommittedDataRate
  - ExceedAction
  - GuaranteedBurstSize
  - NegotiateLimit
  - PeakBurstSize
  - PeakDataRate
  - QciName
  - RateLimit
  - ViolateAction
  - ActiveChargingBandwidthPolicy
  - ActiveChargingRulebase
  - ContentFilteringCategoryPolicyId
  - CreditControlGroup

11.3.2.4 *Logical Inventory Attribute for SAEGW*

Table 11-12: Logical Attribute for SAEGW

Attribute name	3GPP Prescribed Support Qualifier	3GPP Prescribed Read Qualifier	3GPP Prescribed Write Qualifier
Id	M	M	-
inventoryUnitType	M	M	-

vendorName	M	M	-
vendorUnitFamilyType	CM	M	-
vendorUnitTypeNumber	CM	M	-
serialNumber	CM	M	-
versionNumber	O	M	-
dateOfManufacture	O	M	-
dateOfLastService	O	M	-
unitPosition	O	M	-
manufacturerData	O	M	-
relatedFunction	O	M	-
ManagedFunction			
Id			
SAEGWFunction			
Id			
userLabel			

11.3.2.4.1 Vendor Extensions for SAEGW

- SgwService
- PgwService

11.3.2.5 *Logical Inventory Attribute for GGSN*

Table 11-13: Logical Attribute for GGSN

Attribute name	3GPP Prescribed Support Qualifier	3GPP Prescribed Read Qualifier	3GPP Prescribed Write Qualifier
Id	M	M	-
inventoryUnitType	M	M	-
vendorName	M	M	-
vendorUnitFamilyType	CM	M	-
vendorUnitTypeNumber	CM	M	-
serialNumber	CM	M	-
versionNumber	O	M	-
dateOfManufacture	O	M	-
dateOfLastService	O	M	-
unitPosition	O	M	-
manufacturerData	O	M	-
relatedFunction	O	M	-
ManagedFunction			
Id			
4. GgsnFunction			
ggsnFunctionId			
userLabel			
proceduralStatus			

11.3.2.5.1 Vendor Extension for GGSN

- PLMNPolicy
- NewcallPolicy
- AuthenticationServerTimeout
- AccountingServerTimeout
- Gtpu
- AccountingContext
- LocalIpAddress
- PGW
- Plmns
    - Id
    - Primary
- TimersAndQoS
    - Id
    - RetransmissionTimeout
    - MaxRetransmissions
    - EchoInterval
    - GuardInterval

  - SetupTimeout
  - QciToDscp
  - QciArpToDscp
- IQCIEntry
  - Id
  - QCI
  - DSCP
- IQCIARPEntry
  - Id
  - Arp
  - Dscp
  - QCI
- ChargingCharacteristics
  - Id
  - CcBehaviorNoRecords
  - Intervals
  - Profiles
  - Tariffs
- IGGSNChargingCharacteristicsIntervalTableEntry
  - Id
  - ProfileId
  - Interval
  - DownLink
  - UpLink
  - Total
  - Sgsns
- IGGSNChargingCharacteristicsProfilesTableEntry
  - Id
  - Profile
  - Buckets
  - Prepaid
  - DownLink
  - UpLink
  - Total
- IGGSNChargingCharacteristicsTariffTableEntry
  - Id
  - ProfileId
  - Time1
  - Time2
  - Time3
  - Time4
  - Time5
  - Time6
- Sgsns
  - Id
  - IPAddress
  - SubnetMask

  - PLMNId
  - RejectForeignSubscriber
- PLMNForeign
  - RATType
  - Description

11.3.2.6 *Logical Inventory Attribute for ACS*

Table 11-14: Logical Attribute for ACS

Attribute name	3GPP Prescribed Support Qualifier	3GPP Prescribed Read Qualifier	3GPP Prescribed Write Qualifier
Id	M	M	-
inventoryUnitType	M	M	-
vendorName	M	M	-
vendorUnitFamilyType	CM	M	-
vendorUnitTypeNumber	CM	M	-
serialNumber	CM	M	-
versionNumber	O	M	-
dateOfManufacture	O	M	-
dateOfLastService	O	M	-
unitPosition	O	M	-
manufacturerData	O	M	-
relatedFunction	O	M	-
ManagedFunction			
Id			
AcsProfile			
Id			
userLabel			

11.3.2.6.1 Vendor Extension for ACS

The vendor extension information is given here

- **ActiveChargingFairUsage**
  - CpuThresholdPercent
  - DeactivateMarginPercent
  - ThresholdPercent
- **ActiveChargingServiceRedirectUserAgentEntries**
  - userAgent
- AlgMediaIdleTimeout

- **BandwidthPolicyContainer**
    - BandwidthPolicy
        - BandwidthPolicyFlowLimitEntries
            - BandwidthID
            - GroupID
        - BandwidthPolicyRatesAndActionsEntries
            - CommittedBurstRate
            - CommittedDataRate
            - Direction
            - ExceedAction
            - GroupID
            - PeakBurstSize
            - PeakDataRate
            - ViolationAction
        - TotalBandwidthIDConfigured
        - TotalGroupLimitConfigured
        - BandwidthPolicyName
    - TotalBandwidthPolicyConfigured
- CdrFlowControl
- CdrFlowControlUnsentQueueSize
- CdrFlowUnsentQueueHigh
- CdrFlowUnsentQueueLow
- ChargingActionContainer
    - ChargingAction
        - ChargeVolume
        - ChargingActionAllocationRetentionPriority
            - PriorityCapabilityIndicator
            - PriorityLevel
            - PriorityVulnerabilityIndicator
        - ChargingActionBandwidth
            - BandWidthID
            - ChargingActionBandwidthDirectionEntries
                - CommittedBurstRate
                - CommittedDataRate
                - Direction
                - ExceedAction
                - PeakBurstSize
                - PeakDataRate
                - ViolationAction
            - Downlink
            - Uplink

- ChargingActionBillingAction
  - Edr
  - Egcdr
  - RadiusAccountingRecord
  - RfAccounting
  - Udr
- ChargingActionFlowAction
  - ClearQuotaRetryTimer
  - ConditionalRedirect
  - Discard
  - OcsRedirectURL
  - RandomDrop
  - Readdress
  - RedirectURL
  - TerminateFlow
  - TerminateSession
- ChargingActionPacketFilterEntries
  - PacketFilterName
- ChargingActionName
- ChargingActionQoS
  - ClassIdentifier
  - RenegotiateTrafficClass
- ChargingActionVideo
  - BitRate
  - ReaddressingCAE
  - TargetRateReduction
  - Transrating
- ChargingEDRName
- ChargingEGCDRs
- ChargingRf
- ChargingUDRs
- ContentFiltering
- ContentId
- CreditControl
- CreditRatingGroup
- FlowIdleTimeout
- FlowMappingIdleTimeout
- IpTypeOfService
- LimitForFlowTypeAction
- LimitForFlowTypeState
- LimitForFlowTypeValue
- NextHopForwardingAddress
- RedirectURL
- RetransmissionCount

        - ServiceId
        - VlanId
- ContentFiltering
- ContentFilteringCategoriesContainer
    - ContentFilteringCategory
        - CategoryPolicy
            - ContentCategory
            - ContentFailureAction
            - ContentInsert
            - ContentPriority
            - ContentRedirect
            - ContentReplyCode
            - EdrFileFormat
        - ContentFilteringPolicyId
        - EdrFile
        - FailureAction
- ContentFilteringMatchMethod
- CreditControlContainer
    - CreditControlGroups
        - ApnType
        - CreditControlDiameter
            - Dictionary
            - EndPointRealm
            - EndpointName
            - PendingTimeout
            - SessionFailover
        - DiameterPeerSelect
            - ImsiEndValue
            - ImsiRangeMode
            - ImsiStartValue
            - Peer
            - Realm
            - SecondaryPeer
            - SecondaryRealm
        - FailureHandling
            - InitialRequest
            - TerminateRequest
            - UpdateRequest
        - Group
        - Mode
        - MsccFinalUnitAction
        - PendingTrafficTreatment
            - ForcedReauth

        - NoQuota
        - QuotaExhausted
        - Trigger
        - ValidityExpired
    - Quota
        - HoldingTime
        - RequestTrigger
        - TimeThreshold
        - UnitsThreshold
        - ValidityTime
        - VolumeThreshold
    - ServerUnreachableFailureHandling
        - InitialRequest
        - UpdateRequest
    - TriggerType
- DeepPacketInspection
- DymamicContentFiltering
- GroupofRuledefContainer
    - GroupOfRuledef
        - ApplicationType
        - DynamicCommandContentFilteringPolicyId
        - GroupOfRuledefPriorityEntries
            - Priority
            - RuledefName
            - RuledefValue
        - Name
- IcmpFlowIdleTimeout
- InterpretationOfChargingRulebaseName
- PassiveMode
- RulebaseContainer
    - Rulebase
        - ChargeMidSessionPackets
        - ChargeSeparateFromApplication
        - ChargingRuleOptimization
        - DefaultBandwidthPolicyName
        - DelayedCharging
        - FairUsageWaiverPercentage
        - FlowErrorChargingAction
        - IgnorePortInapplicationHeader
        - LimitForTCPFlows
        - LimitForTotalFlows
        - LimitforNonTCPFlows
        - P2pDynamicRouting

- PrefixedUrlForPreprocessingGroupName
- QosRenogotiationTimeout
- RtpDynamicRouting
- RuleBaseRoutingActionPrioritiesEntries
  - Analyzer
  - Description
  - Priority
  - RoutingRuledef
- RulebaseBillingAndChargingRecords
  - BillingFormatEGCDRs
  - BillingFormatRadius
  - BillingFormatRf
  - BillingFormatUDRs
  - EdrSupressZeroByteRecords
  - EdrTransactionCompleteProtocol
  - FailureHandlingUDRs
  - FailureHandlingUdrFormatName
  - TransactionCompleteChargingEDRFormat
  - TransactionCompleteReportingERFormat
  - UDRFormatname
- RulebaseCCAFields
  - DiameterRequestedServiceSpecificUnits
  - DiameterRequestedServiceUnitTime
  - DiameterRequestedServiceVolumeInputOctets
  - DiameterRequestedServiceVolumeOutputOctets
  - DiameterRequestedServiceVolumeTotalOctets
  - QuotaRetryTime
  - RadiusChargingContext
  - RadiusChargingGroup
  - RadiusInterimInterval
  - RulebaseCCAQuotaHoldingTimeEntries
    - ContentId
    - QuotaHoldingTime
  - RulebaseCCATimeDurationAlgorithmEntries
    - AlgorithmName
    - ContentId
    - Time
- RulebaseChargingActionPrioritiesEntries
  - ChargingActionName
  - Description
  - Priority
  - Ruledef
  - TimeDef
  - Type

- RulebaseContentFiltering
  - ContentFilteringFlowAnyError
  - ContentFilteringGroup
  - ContentFilteringMode
  - ContentFilteringPolicy
- RulebaseEGCDRFields
  - DownlinkOctets
  - InactivityTime
  - ParkingMeterTimeout
  - RulebaseEGCDRTariffTimeThresholdEntries
    - TariffName
    - TarriffTimeValue
  - ThresholdInterval
  - TimeBasedMetering
  - TimeBasedMeteringAlgorithm
  - TimePeriod
  - TotalOctets
  - UplinkOctets
- RulebaseFlowEndConditions
  - ChargingEDR
  - ContentFilteringEDR
  - FlowOverflowEDR
  - HagrEDR
  - HandOffEDR
  - NormalEndSignallingEDR
  - ReportingEDR
  - SessionEndEDR
  - TimeoutEDR
  - UrlBlacklistingEDR
- RulebaseName
- RulebasePostProcessingActionPrioritiesEntries
  - ChargingAction
  - Description
  - Priority
  - RuledefName
  - RuledefValue
  - Type
- RulebaseTCPProxyMode
  - ContentFiltering
  - DccaEnabled
  - IpReaddressing
  - NextHopReaddressing
  - ProxyMode
  - XheaderInsertion

        - RulebaseTetheringDetection
            - OsBasedDetection
            - TetheringDetection
            - UaBasedDetection
        - RulebaseUDRFields
            - DownlinkOctets
            - ThresholdInterval
            - TotalOctets
            - UdrTrigger
            - UplinkOctets
        - UrlBlackListingAction
        - UrlBlacklistingContentId
        - XHeaderCertificateName
        - XHeaderReEncryptionPeriod
- **RuledefContainer**
    - Ruledef
        - ApplicationType
        - CopyPacketToLog
        - MultiLineOR
        - RuleName
        - RuledefProtocolConfigurationEntries
            - Fields
            - Operator
            - Value
        - TetheredFlowCheck
- SelectedChargingRulebaseForAVP
- TcpFlowIdleTimeout
- TcpFlowMappingIdleTimeout
- UdpFlowIdleTimeout
- UdpFlowMappingTimeout
- UrlBlackListing
- UrlBlacklistingMatchMethod

11.3.2.7 *Logical Inventory Attribute for AAA*

The Logical inventory Attributes for AAAGroup and AAADiameterEndpoint are given below

A. AAAGroup

The Logical inventory Attributes for AAAGroup is given below

Table 11-15: Attribute for AAA Group

Attribute name	3GPP Prescribed Support Qualifier	3GPP Prescribed Read Qualifier	3GPP Prescribed Write Qualifier
Id	M	M	-
inventoryUnitType	M	M	-
vendorName	M	M	-
vendorUnitFamilyType	CM	M	-
vendorUnitTypeNumber	CM	M	-
serialNumber	CM	M	-
versionNumber	O	M	-
dateOfManufacture	O	M	-
dateOfLastService	O	M	-
unitPosition	O	M	-
manufacturerData	O	M	-
relatedFunction	O	M	-
ManagedFunction			
Id			
AAAGroup			
Id			
userLabel			

11.3.2.7.1 Vendor Extension for AAAGroup

A. The vendor extension information of AAAGroup is given here

- **AAADiameterConfiguration**
  - AAADiameterAccountingGeneralConfiguration
    - Dictionary
    - EndPointName
    - MaxRetries
    - MaxTransmissions
    - RequestTimeout
  - AAADiameterAccountingServersEntries
    - DiameterServerHostName
    - NumberOfInstanceInDownState
    - NumberOfInstanceInUpState
    - Priority

- AAADiameterAuthenticationGeneralConfiguration
  - Dictionary
  - EndPointName
  - MaxRetries
  - MaxTransmissions
  - RequestTimeout
  - RedirectHostAVP
- AAADiameterAuthenticationServersEntries
  - DiameterServerHostName
  - NumberOfInstanceInDownState
  - NumberOfInstanceInUpState
  - Priority
- GroupName

- **AAARadiusConfiguration**
  - AAARadiusAccountingGeneralConfiguration
    - AccountingGTPtriggerPolicy
    - AccountingRequestMaxRetries
    - AccountingRequestMaxTransmissions
    - AccountingResponseTimeout
    - ApnToBeIncluded
    - Archive
    - FireAndForget
    - InterimAccountingDownlinkVolume
    - InterimAccountingInterval
    - InterimAccountingTotalVolume
    - InterimAccountingUplinkVolume
    - MaxOutstandingAAAMessages
    - MaxPDUSize
    - RemoteAddress
    - ServerBillingVersion
    - ServerDeadTime
    - ServerSelectionAlgorithm
  - AAARadiusAccountingKeepAliveAndDeadServerConfiguration
    - CallingStationID
    - DetectDeadServerConsecutiveFailures
    - DetectDeadServerKeepAlive
    - DetectDeadServerResponseTimeout
    - KeepAliveConsecutiveResponse
    - KeepAliveInterval
    - KeepAliveMaxRetries
    - KeepAliveTimeout
    - UserName
    - FramedIPAddress

- AAARadiusAccountingServersEntries
  - AdministrativeStatus
  - KeepAliveRepresentativeGroup
  - OperationalState
  - Preference
  - RequestTimeout
  - RetainAdministrativeStatusAfterReboot
  - RetransmitCount
  - RetransmitEnabled
  - Role
  - ServerIP
  - ServerPort
- AAARadiusAuthenticationGeneralConfiguration
  - ApnToBeIncluded
  - AuthenticateNullUserName
  - AuthenticationRequestMaxRetries
  - AuthenticationRequestMaxTransmissions
  - AuthenticationResponsetimeout
  - MaxOutstandingAAAMessages
  - ModifyNASIP
  - ProbeInterval
  - ProbeMaxRetries
  - ProbeTimeout
  - ServerDeadTime
  - ServerSelectionAlgorithm
- AAARadiusAuthenticationKeepAliveAndDeadServerConfiguration
  - CallingStationID
  - DetectDeadServerConsecutiveFailures
  - DetectDeadServerKeepAlive
  - DetectDeadServerResponseTimeout
  - KeepAliveConsecutiveResponse
  - KeepAliveInterval
  - KeepAliveMaxRetries
  - KeepAliveTimeout
  - UserName
  - AllowAccessReject
  - AuthenticationPassword
- AAARadiusAuthenticationServersEntries
  - AdministrativeStatus
  - KeepAliveRepresentativeGroup
  - OperationalState
  - Preference
  - RequestTimeout
  - RetainAdministrativeStatusAfterReboot

        - RetransmitCount
        - RetransmitEnabled
        - Role
        - ServerIP
        - ServerPort
    - AAARadiusChargingAccountingServersEntries
        - AdministrativeStatus
        - KeepAliveRepresentativeGroup
        - OperationalState
        - Preference
        - RequestTimeout
        - RetainAdministrativeStatusAfterReboot
        - RetransmitCount
        - RetransmitEnabled
        - Role
        - ServerIP
        - ServerPort
    - AAARadiusChargingGeneralConfiguration
        - AccountingServerSelectionAlgorithm
        - AuthenticationRequestMaxTransmissions
        - AuthenticationServerSelectionAlgorithm
        - ChargingDetectDeadServerConsecutiveFailures
        - ChargingDetectDeadServerResponseTimeout
        - MaximumOutstandingAAAMessages
        - ServerDeadTime
        - ServerMaxRetries
        - ServerResponseTimeout
    - AAARadiusChargingServersEntries
        - AdministrativeStatus
        - KeepAliveRepresentativeGroup
        - OperationalState
        - Preference
        - RequestTimeout
        - RetainAdministrativeStatusAfterReboot
        - RetransmitCount
        - RetransmitEnabled
        - Role
        - ServerIP
        - ServerPort
    - AAARadiusChargingTriggersConfiguration
        - MsTimezoneChangeTrigger
        - QualityOfServiceChangeTrigger
        - RadioAccessTechnologyChangeTrigger
        - RoutingAreaInformationChangeTrigger

        - ServingNodeChangeTrigger
        - UserLocationInformationChangeTrigger
    - AllowAccountingDown
    - AllowAuthenticationDown
    - AuthenticatorValidation
    - DeadCriteriaRetransmitCount
    - DeadCriteriaTime
    - DeadTime
    - Dictionary
    - GroupName
    - IgnorePreferredServer
    - LoadBalancingMethod
    - RequestTimeout
    - RetransmitCount
    - RetransmitEnabled
    - StripDomain
    - VRF

B. AAADiameterEndpoint

The Logical inventory Attributes for AAADiameterEndpoint is given below

Table 11-16: Attribute for AAADiameterEndpoint

Attribute name	3GPP Prescribed Support Qualifier	3GPP Prescribed Read Qualifier	3GPP Prescribed Write Qualifier
Id	M	M	-
inventoryUnitType	M	M	-
vendorName	M	M	-
vendorUnitFamilyType	CM	M	-
vendorUnitTypeNumber	CM	M	-
serialNumber	CM	M	-
versionNumber	O	M	-
dateOfManufacture	O	M	-
dateOfLastService	O	M	-
unitPosition	O	M	-
manufacturerData	O	M	-
relatedFunction	O	M	-
ManagedFunction			
Id			
AAADiameterEndpoint			
Id			
userLabel			

C. The vendor extension information of AAADiameterEndpoint is given here

- **AAADiameterPeersEntries**
  - LocalHostName
  - LocalIPAddress
  - LocalPort
  - LocalRealm
  - PeerHostName
  - PeerIPAddress
  - PeerPort
  - PeerRealm
  - SecondaryLocalIPAddress
  - SecondaryLocalPort
  - State
  - TaskName
- **AAADiameterRouteEntries**
  - Application
  - Origin
  - PeerHostName
  - PeerName
  - PeerRealm
  - RouteExpiryTimeOut
  - RouteType
  - RouteWeight
- **AAADiameterRouteHealthStatusEntries**
  - AvailableCount
  - FailedCount
  - OriginCount
  - PeerHostName
  - PeerName
- **AAARealmTaskManagerEntries**
  - ApplicationName
  - CardNumber
  - CpuNumber
  - TaskName
- OriginRealmName

11.3.2.8 *Logical Inventory Attribute for GTPP*

The Logical inventory Attributes for GTPP is given below

Table 11-17: Attribute for GTPP

Attribute name	3GPP Prescribed Support Qualifier	3GPP Prescribed Read Qualifier	3GPP Prescribed Write Qualifier
Id	M	M	-
inventoryUnitType	M	M	-
vendorName	M	M	-
vendorUnitFamilyType	CM	M	-
vendorUnitTypeNumber	CM	M	-
serialNumber	CM	M	-
versionNumber	O	M	-
dateOfManufacture	O	M	-
dateOfLastService	O	M	-
unitPosition	O	M	-
manufacturerData	O	M	-
relatedFunction	O	M	-
ManagedFunction			
Id			
GTPPProfile			
Id			
userLabel			

11.3.2.8.1 Vendor Extension for GTPP

The vendor extension information is given here

- AccountingServer
  - ContextName
  - Group
  - Port
  - PrimaryAccountingServerAddress
  - Priority
  - State
- AccountingServerFailureDetection
  - DeadServerSuppressCDRs
  - DeadTime
  - DetectDeadServerConsecutiveFailures
  - DuplicateHoldTimeMinutes

  - EchoMaxRetries
  - EchoTimeout
  - RedirectionAllowed
- CDRAttributesIndicator
  - ApnPresent
  - CamelInfo
  - CellPLMNId
  - ChargingCharacteristicSelectionModePresent
  - DestinationNumber
  - DiagnosticsPresent
  - Duration
  - DynamicFlagPresent
  - ImeiPresent
  - ListOfServiceDataPresent
  - LocalRecSeqNumPresent
  - Msisdn
  - NodeIDPresent
  - NodeIDSuffix
  - PdnConnectionIDPresent
  - PdpAddressPresent
  - PdpTypePresent
  - PgwPLMNIDPresent
  - PlmnIDPresent
  - PlmnIDUnknownUse
  - Rat
  - RatPresent
  - RecordingEntity
  - ServedMNAIPresent
  - ServedPDPPDNAddressExtensionPresent
  - ServiceCentre
  - StartTimePresent
  - StopTimePresent
  - UserLocationInformationPresent
- CDRTriggers
  - CellUpdate
  - DirectTunnel
  - EgcdrMaxLosdvLimit
  - InterPLMNSGSNChange
  - IntraSGSNGroupChange
  - MsTimezoneChange
  - OnRATChangeGenerate
  - PlmnIDChange
  - PresvModeStateChange

    - QosChange
    - RatChange
    - RoutingAreaUpdate
    - ServingNodeChangeLimit
    - TariffTimeChange
    - TimeLimit
    - VolumeLimit
- CdrMaxRetries
- CdrStorageMode
- CdrTimeout
- ChargingAgent
    - ChargingAgentAddress
    - ChargingAgentPort
- DataReqStartSeqNum
- Dictionary
- EGCDRDataGenerationConfiguration
    - ClosingCauseUnique
    - DeleteServiceThresholds
    - IncludeAllLosdvs
    - LosdvMaxContainers
    - LotdvMaxContainers
    - ServiceDownlink
    - ServiceIdleTimeout
    - ServiceInterval
    - ServiceTotal
    - ServiceUplink
- LocalStorage
- FileCompression
- FileFormat
- FileRotationCDRCount
- FileRotationTimeInterval
- FileRotationVolumeLimit
- ForceFileRotationByTimeInterval
- PurgeProcessedFiles
- MBMSCDRTriggers
    - Buckets
    - Interval
    - Time1
    - Time2
    - Time3
    - Time4
    - Volume
- MaxCDRSinMsg

- MaxCDRSize
- MaxCDRsWaitTime
- RecoverFileSeqNum
- SourcePortValidation
- StartFileSeqNum
- StorageServer
    - StorageServerAddress
    - StorageServerMaxRetries
    - StorageServerPort
    - StorageServerTimeout

11.3.2.9 *Logical Inventory Attribute for Operator Policy*

The Logical inventory Attributes for Operator Policy is given below

Table 11-18: Attribute for OperatorPolicy

Attribute name	3GPP Prescribed Support Qualifier	3GPP Prescribed Read Qualifier	3GPP Prescribed Write Qualifier
Id	M	M	-
inventoryUnitType	M	M	-
vendorName	M	M	-
vendorUnitFamilyType	CM	M	-
vendorUnitTypeNumber	CM	M	-
serialNumber	CM	M	-
versionNumber	O	M	-
dateOfManufacture	O	M	-
dateOfLastService	O	M	-
unitPosition	O	M	-
manufacturerData	O	M	-
relatedFunction	O	M	-
ManagedFunction			
Id			
PolicyProfile			
Id			
userLabel			

11.3.2.9.1 Vendor Extension for Operator Policy

The vendor extension information is given here

- ApnRemapTableName
- ApnRemapTableValidity
- CallControlProfileName
- CallControlValidity
- DefaultAPNProfileName
- DefaultAPNProfileValidity
- **OperatorPolicyAPNEntries**
  - NetworkIdentifier
  - NetworkIdentifierAPNProfileName
  - NetworkIdentifierAPNProfileValidity
  - OperatorIdentifier
  - OperatorIdentifierAPNProfileName
  - OperatorIdentifierAPNProfileValidity
- OperatorPolicyDescription
- **OperatorPolicyIMEIRangesEntries**
  - ImeiValidity
  - ProfileName
  - SoftwareVersion
  - StartRange
  - ToRange

11.3.2.10 *Logical Inventory Attribute for SGSN*

Table 11-19: Logical Attribute for SGSN

Attribute name	3GPP Prescribed Support Qualifier	3GPP Prescribed Read Qualifier	3GPP Prescribed Write Qualifier
Id	M	M	-
inventoryUnitType	M	M	-
vendorName	M	M	-
vendorUnitFamilyType	CM	M	-
vendorUnitTypeNumber	CM	M	-
serialNumber	CM	M	-
versionNumber	O	M	-
dateOfManufacture	O	M	-
dateOfLastService	O	M	-
unitPosition	O	M	-
manufacturerData	O	M	-

relatedFunction	O	M	-
ManagedFunction			
Id			
5. SgsnFunction			
sgsnId			
userLabel			
lacList			
racList			
mccList			
mncList			

11.3.2.10.1 SGSN LAC,RAC,MCC,MNC Representation

The lac, rac and mcc are represented as single long number in the response, but the actually represent a hierarchy of codes. The logic to derive different codes from a single long number(of 8 bytes) is given below:

Byte Pos 8	Byte Pos 7	Byte Pos 6	Byte Pos 5	Byte Pos 4	Byte Pos 3	Byte Pos 2	Byte Pos 1

Method to derive rac, lac, mcc, mnc from a number in racList

Byte Position 1 – rac
Byte Position 3 and 2 together – lac
Byte Position 5 and 4 together – mnc
Byte Position 7 and 6 together – mcc
Byte Position 8 – unused

Method to derive lac, mcc, mnc from a number in lacList

Byte Position 2 & 1 – lac
Byte Position 4 and 3 together – mnc
Byte Position 6 and 5 together – mcc
Byte Position 8 and 7 – unused

Method to derive mcc, mnc from a number in mnclist

Byte Position 2 & 1 – mnc
Byte Position 4 and 3 together – mcc
Byte Position 8 to 5 – unused

Example:

A number 1090720953797377 in racList actually means the following codes

Mobile Country Code: 992
Mobile Network Code: 323
Location Area Code : 11
Routing Area Code : 1

11.3.2.10.2 Vendor Extension for SGSN

- AccountingCdrTypes
- AccountingContext
- AssociatedCamelService
- AssociatedEgtpService
- AssociatedGsService
- AssociatedHssService
- AssociatedIupsService
- AssociatedMapService
- AssociatedSgtpService
- ClearSubscriptionData
- CoreNetworkId
- DetachTypeIE
- DnsIsrauMccMncEncoding
- GfFailureAction
- GfTimeoutAction
- Intervals
  - Id
  - ProfileId
  - Interval
  - DownLink
  - UpLink
  - Total
  - Sgsns
- MaxPdpContexts
- NetworkGlobalMMEIDMgmtDB
- OffloadT3312Timeout
- Profiles
  - DownLink
  - Buckets
  - Profile
  - Prepaid
  - Total
  - UpLink
- QosModification
- ReportingActionEventRecord
- SGSNGPRSMobilityManagement
  - implicitDetachTimeout
  - maxAuthRetries
  - maxIdentityRetries
  - maxPTMSIRelocRetries
  - maxPageRetries
  - mobilReachableTimeout
  - performIdentityAfterAuth
  - purgeTimeout
  - t3302Timeout
  - t3312Timeout

        - t3313Timeout
        - t3322Timeout
        - t3323Timeout
        - t3350Timeout
        - t3360Timeout
        - t3370Timeout
        - trauTimeout
    - SGSNNRIProperties
        - nriLength
        - nriNonBroadcastLAC
        - nriNonBroadcastMCC
        - nriNonBroadcastMNC
        - nriNonBroadcastRAC
        - nriNullValue
        - targetNRIValueCount
    - SGSNNRIValuesEntries
        - activating
        - connecting
        - nriValue
    - SGSNSessionManagmentProperties
        - guardTimeout
        - maxActivateRetries
        - maxDeactivateRetries
        - maxModifyRetries
        - t3385Timeout
        - t3386Timeout
        - t3395Timeout
    - SGSNTargetNRICountEntries
        - targetCount
        - targetNRI
    - SgsnStatus
    - TaiManagementDB
    - Tariffs
        - profileId
        - time1
        - time2
        - time3
        - time4
        - time5
        - time6

11.3.2.11 *Logical Inventory Attribute for MME*

Table 11-20: Logical Attribute for MME

Attribute name	3GPP Prescribed Support Qualifier	3GPP Prescribed Read Qualifier	3GPP Prescribed Write Qualifier
Id	M	M	-
inventoryUnitType	M	M	-
vendorName	M	M	-
vendorUnitFamilyType	CM	M	-
vendorUnitTypeNumber	CM	M	-
serialNumber	CM	M	-
versionNumber	O	M	-
dateOfManufacture	O	M	-
dateOfLastService	O	M	-
unitPosition	O	M	-
manufacturerData	O	M	-
relatedFunction	O	M	-
ManagedFunction			
Id			
MMEFunction			
userLabel			
pLMNIdList			
mMEC			
mMEPool			

11.3.2.11.1 Vendor Extension for MME

- callSetupTimeout
- eNodeBCacheTimeout
- epsMobilityManagementTimeouts
  - implicitDetachTimeout
  - mobileReachableTimeout
  - t3412Timeout
  - t3413Timeout
  - t3422Timeout
  - t3423Timeout
  - t3450Timeout
  - t3460Timeout
  - t3470Timeout
- epsSessionManagementTimeouts
  - t3485Timeout

    - t3486Timeout
    - t3489Timeout
    - t3495Timeout
- egtpService
- globalMMEIDMgmtDB
- gtpv2PiggyBagging
- hssPeerService
- lteSecurityProcedures
    - encryptionAlgorithmPriority1
    - encryptionAlgorithmPriority2
    - encryptionAlgorithmPriority3
    - integrityAlgorithmPriority1
    - integrityAlgorithmPriority2
- locationReporting
- lteEmergencyProfile
- mmepgwAddressEntries
- mmePolicy
    - policyAttach
        - allowOnECATimeout
        - denyGreyListed
        - denyUnknown
        - eirQuery
        - imeiQueryType
        - setUETime
        - verifyEmergency
    - policyIdleModeDetach
    - policyInterRatIgnoreSGSNContextID
    - policyInterRatTunnels
    - policyNetworkDualAddr
    - policyOverload
    - policyPDNReconnection
    - policyS1Reset
    - policySCTPDown
    - policyTAU
        - allowOnECATimeout
        - denyGreyListed
        - denyUnknown
        - eirQuery
        - imeiQueryType
        - setUETime
        - verifyEmergency
- maxBearerPerSubscriber
- maxPDNsPerSubscriber
- maxPagingAttempt
- mmeGroupId
- mmeManagerRecovery
- mmeOffloading

- mmeStatus
- mscIPAddress
- mscPort
- nriLengthEntries
    - length
    - plmind
        - mnc
        - mcc
- nasMaxRetransmission
- newcallPolicy
- peerMMEDNSContext
- peerMMEGUMMEIEntries
    - groupId
    - ipAddress
    - mmeCode
    - plmnId
        - mnc
        - mcc
- peerMMETAIEntries
    - ipAddress
    - plmnId
        - mcc
        - mnc
    - priority
    - tac
- peerSGSNDNSContext
- peerSGSNRAIEntries
    - gnInterface
    - gpInterface
    - ipAddress
    - lac
    - nri
    - plmnId
        - mcc
        - mnc
    - rac
    - s16Interface
    - s3Interface
- peerSGSNRNCTableEntries
    - gnInterface
    - gpInterface
    - ipAddress
    - plmnId
        - mnc
        - mcc
    - rnc
    - s16Interface

    - s3Interface
- pgwDNSContext
- relativeCapacity
- s1Interface
- sctpParamTemplate
- sgsService
- sgtpcService
- sgwDNSContext
- subscriberMap
- ueDBPurgeTimeout

11.4 3GPP Status File

A Status file will be generated to indicate the completion status of the web service calls "getAllInventory" and "getManagedElement". This file will be present under the "INSTALL_DIR"/sil-data folder and on the respective FTP / SFTP servers under the configured output directory.
The status file will be referred to get the status of the web service requests.

11.4.1 Status File Name

The status file name contains the request ID, the module and the status of the completion of web service request.
<**Request_ID**>_<**Module_Identifier**>_<**Status**>.status
Where:

- **Request_ID**: A running sequence number generated by the server to uniquely identify a request. The request ID is returned to the web service user in the response. The web service user can use the request ID to query on the status of the request.
- **Module_Identifier**: Indicates the module on which the status file was generated in response to an operation.
- **Status**: Indicates if the call has completed successfully, failed or in-progress.

The status file will have the status strings as part of the name based on the following conditions:

- **IN_PROGRESS** – Indicates that the file creation is started
- **SUCCESS** - Indicates that the request is successfully executed
- **FAILURE** – Indicates if any failure was encountered while processing the request

A Sample status file will have the following name: **10008_IM_SUCCESS.status**

11.4.2 Status File Contents

The status file will contain information about the management elements for which inventory was collected, their name, the inventory file name and the location of storage.

Total Managed Element Count: 1
Success Count: 1
Skipped Count: 0

Failed Count: 0

ManagedElementName	**FamilyType**	**Status**	**InventoryFileName**	**Location**	**Size(Bytes)**
10.86.66.35	CISCO_ASR_5500	SUCCESS	IM_20120808_1005+0300_32767_10.86.66.35_10002.xml	localhost://tmp/IM_20120808_1005+0300_32767_10.86.66.35_10002.xml	

Where
10.86.66.35 – Indicates the managed element for which the inventory is collected.
CISCO_ASR_5500 – Indicates the device family
SUCCESS – Indicates the status of the request.
IM_20120808_1005+0300_32767_10.86.66.35_10002.xml – Name of the inventory file.
10.10.56.55:/tmp – Indicates the location where the inventory file is generated.
123456 – Indicates IM file size in bytes.

11.5 3GPP Notifications

11.5.1 File Ready Notification

```
<soap:Envelope xmlns:soap="http://schemas.xmlsoap.org/soap/envelope/">
    <soap:Body>
        <ns2:notify
xmlns:ns2="http://www.3gpp.org/ftp/Specs/archive/32_series/32.307/schema/
32307-810/notification/NotificationIRPNtfData"
xmlns:ns3="http://www.3gpp.org/ftp/Specs/archive/32_series/32.317/schema/
32317-810/GenericIRPData"
xmlns:ns4="http://www.3gpp.org/ftp/specs/archive/32_series/32.305#notific
ation"
xmlns:ns5="http://www.3gpp.org/ftp/specs/archive/32_series/32.345#fTIRPIO
Cs"
xmlns:ns6="http://www.3gpp.org/ftp/specs/archive/32_series/32.345#fTIRPNo
tif"
xmlns:ns7="http://www.3gpp.org/ftp/specs/archive/32_series/32.526#sonPoli
cyNrm"
xmlns:ns8="http://www.3gpp.org/ftp/Specs/archive/32_series/32.347#FTIRPDa
ta"
xmlns:ns9="http://www.3gpp.org/ftp/specs/archive/32_series/32.626#generic
Nrm">
            <notificationHeaderAndBody>
                <ns4:Notification
xmlns:xsi="http://www.w3.org/2001/XMLSchema-instance"
xsi:type="ns6:NotifyFileReady">
                    <ns4:header>
                        <ns4:objectInstance>FTIRP=1</ns4:objectInstance>
                        <ns4:eventTime>2013-04-
16T12:55:13.171+05:30</ns4:eventTime>
                        <ns4:systemDN>FTIRP=1</ns4:systemDN>
                        <ns4:notificationType>FILE-
READY</ns4:notificationType>
                    </ns4:header>
                    <ns6:body>
                        <ns6:FileInfoList>
                            <ns5:fileInfo>
                                <ns5:managementDataType>IM</ns5:managemen
tDataType>
                                <ns5:fileLocation>10.106.2.220:/tmp/IM_20
130416_1255+0530_32767_ASR-5000_10005.xml</ns5:fileLocation>
                                <ns5:fileSize>1117964</ns5:fileSize>
                                <ns5:fileReadyTime>2013-04-
16T12:55:00.000+05:30</ns5:fileReadyTime>
                                <ns5:fileExpirationTime>2013-05-
03T13:35:42.086+05:30</ns5:fileExpirationTime>
                                <ns5:fileCompression/>
                                <ns5:fileFormat>XML-
schema</ns5:fileFormat>
                            </ns5:fileInfo>
                        </ns6:FileInfoList>
                        <ns6:AdditionalText>10005</ns6:AdditionalText>
                    </ns6:body>
                </ns4:Notification>
```

```
            </notificationHeaderAndBody>
        </ns2:notify>
    </soap:Body>
</soap:Envelope>
```

11.5.2 File Preparation Error Notification

```
<soap:Envelope xmlns:soap="http://schemas.xmlsoap.org/soap/envelope/">
    <soap:Body>
        <ns2:notify
xmlns:ns2="http://www.3gpp.org/ftp/Specs/archive/32_series/32.307/schema/
32307-810/notification/NotificationIRPNtfData"
xmlns:ns3="http://www.3gpp.org/ftp/Specs/archive/32_series/32.317/schema/
32317-810/GenericIRPData"
xmlns:ns4="http://www.3gpp.org/ftp/specs/archive/32_series/32.305#notific
ation"
xmlns:ns5="http://www.3gpp.org/ftp/specs/archive/32_series/32.345#fTIRPIO
Cs"
xmlns:ns6="http://www.3gpp.org/ftp/specs/archive/32_series/32.345#fTIRPNo
tif"
xmlns:ns7="http://www.3gpp.org/ftp/specs/archive/32_series/32.526#sonPoli
cyNrm"
xmlns:ns8="http://www.3gpp.org/ftp/Specs/archive/32_series/32.347#FTIRPDa
ta"
xmlns:ns9="http://www.3gpp.org/ftp/specs/archive/32_series/32.626#generic
Nrm">
            <notificationHeaderAndBody>
                <ns4:Notification
xmlns:xsi="http://www.w3.org/2001/XMLSchema-instance"
xsi:type="ns6:NotifyFilePreparationError">
                    <ns4:header>
                        <ns4:objectInstance>FTIRP=1</ns4:objectInstance>
                        <ns4:eventTime>2013-04-
16T16:39:04.464+05:30</ns4:eventTime>
                        <ns4:systemDN>FTIRP=1</ns4:systemDN>
                        <ns4:notificationType>FILE-
PREPARATION_ERROR</ns4:notificationType>
                    </ns4:header>
                    <ns6:body>
                        <ns6:FileInfoList/>
                        <ns6:Reason>errorInPreparation</ns6:Reason>
                        <ns6:AdditionalText>10012:Encountered Error while
preparing Inventory Files for Some managed Devices</ns6:AdditionalText>
                    </ns6:body>
                </ns4:Notification>
            </notificationHeaderAndBody>
        </ns2:notify>
    </soap:Body>
</soap:Envelope>
```

11.5.3 New Alarm Notification

```
<soap:Envelope xmlns:soap="http://schemas.xmlsoap.org/soap/envelope/">
   <soap:Body>
      <ns2:notify
xmlns:ns2="http://www.3gpp.org/ftp/Specs/archive/32_series/32.307/schema/3
```

```
2307-810/notification/NotificationIRPNtfData"
xmlns:ns3="http://www.3gpp.org/ftp/specs/archive/32_series/32.111-
6/schema/alarmIRPIOCs"
xmlns:ns4="http://www.3gpp.org/ftp/specs/archive/32_series/32.676#stateMan
agementIRP"
xmlns:ns5="http://www.3gpp.org/ftp/specs/archive/32_series/32.626#genericN
rm"
xmlns:ns6="http://www.3gpp.org/ftp/specs/archive/32_series/32.305#notifica
tion"
xmlns:ns7="http://www.3gpp.org/ftp/specs/archive/32_series/32.355#cSIRPNot
if"
xmlns:ns8="http://www.3gpp.org/ftp/specs/archive/32_series/32.111#alarmIRP
Notif"
xmlns:ns9="http://www.3gpp.org/ftp/specs/archive/32_series/32.345#fTIRPIOC
s"
xmlns:ns10="http://www.3gpp.org/ftp/specs/archive/32_series/32.345#fTIRPNo
tif"
xmlns:ns11="http://www.3gpp.org/ftp/specs/archive/32_series/32.526#sonPoli
cyNrm"
xmlns:ns12="http://www.3gpp.org/ftp/Specs/archive/32_series/32.347#FTIRPDa
ta"
xmlns:ns13="http://www.3gpp.org/ftp/Specs/archive/32_series/32.317/schema/
32317-810/GenericIRPData"
xmlns:ns14="http://www.3gpp.org/ftp/specs/archive/32_series/32.355#cSIRPIO
Cs">
         <notificationHeaderAndBody>
            <ns6:Notification xsi:type="ns8:NotifyNewAlarm"
xmlns:xsi="http://www.w3.org/2001/XMLSchema-instance">
               <ns6:header>

<ns6:objectClass>{[ManagedElement(Key=10.104.63.23)][Trap]}</ns6:objectCla
ss>
                  <ns6:objectInstance>10.104.63.23</ns6:objectInstance>
                  <ns6:notificationId>1222812</ns6:notificationId>
                  <ns6:eventTime>2015-03-25T12:06:19.000-
04:00</ns6:eventTime>
                  <ns6:systemDN>ALARM-IRP=1</ns6:systemDN>

<ns6:notificationType>notifyNewAlarm</ns6:notificationType>
               </ns6:header>
               <ns8:body>
                  <ns3:probableCause>Indeterminate</ns3:probableCause>
                  <ns3:perceivedSeverity>Cleared</ns3:perceivedSeverity>
                  <ns3:alarmType>Quality Of Service Alarm</ns3:alarmType>
                  <ns3:alarmId>812</ns3:alarmId>
                  <ns3:specificProblem/>
                  <ns3:additionalText>A SGSN Service has stopped - Cleared
due to ForceClear</ns3:additionalText>
                  <ns3:additionalInformation>
                     <ns3:attributeValue>
                        <ns3:attributeName>Identifier</ns3:attributeName>
                        <ns3:attributeValue xsi:type="xs:string"
xmlns:xs="http://www.w3.org/2001/XMLSchema">net://net:9@{[NewAlarm(Id=34)]
}</ns3:attributeValue>
                     </ns3:attributeValue>
                     <ns3:attributeValue>
```

```
<ns3:attributeName>AlarmCategory</ns3:attributeName>
                        <ns3:attributeValue xsi:type="xs:string"
xmlns:xs="http://www.w3.org/2001/XMLSchema">9</ns3:attributeValue>
                     </ns3:attributeValue>
                     <ns3:attributeValue>

<ns3:attributeName>AlarmServerAddress</ns3:attributeName>
                        <ns3:attributeValue xsi:type="xs:string"
xmlns:xs="http://www.w3.org/2001/XMLSchema">10.76.81.236</ns3:attributeVal
ue>
                     </ns3:attributeValue>
                     <ns3:attributeValue>
                        <ns3:attributeName>AlertGroup</ns3:attributeName>
                        <ns3:attributeValue xsi:type="xs:string"
xmlns:xs="http://www.w3.org/2001/XMLSchema">asr5kSGSNServiceStop</ns3:attr
ibuteValue>
                     </ns3:attributeValue>
                     <ns3:attributeValue>

<ns3:attributeName>AlarmManagedObjectAddress</ns3:attributeName>
                        <ns3:attributeValue xsi:type="xs:string"
xmlns:xs="http://www.w3.org/2001/XMLSchema">10.104.63.23</ns3:attributeVal
ue>
                     </ns3:attributeValue>
                     <ns3:attributeValue>
                        <ns3:attributeName>AlertID</ns3:attributeName>
                     </ns3:attributeValue>
                  </ns3:additionalInformation>
               </ns8:body>
            </ns6:Notification>
         </notificationHeaderAndBody>
      </ns2:notify>
   </soap:Body>
</soap:Envelope>
```

11.5.4 Ack State Changed Notification

```
<soap:Envelope xmlns:soap="http://schemas.xmlsoap.org/soap/envelope/">
   <soap:Body>
      <ns2:notify
xmlns:ns2="http://www.3gpp.org/ftp/Specs/archive/32_series/32.307/schema/3
2307-810/notification/NotificationIRPNtfData"
xmlns:ns3="http://www.3gpp.org/ftp/Specs/archive/32_series/32.317/schema/3
2317-810/GenericIRPData"
xmlns:ns4="http://www.3gpp.org/ftp/specs/archive/32_series/32.305#notifica
tion"
xmlns:ns5="http://www.3gpp.org/ftp/specs/archive/32_series/32.345#fTIRPIOC
s"
xmlns:ns6="http://www.3gpp.org/ftp/specs/archive/32_series/32.345#fTIRPNot
if"
xmlns:ns7="http://www.3gpp.org/ftp/specs/archive/32_series/32.111#alarmIRP
Notif" xmlns:ns8="http://www.3gpp.org/ftp/specs/archive/32_series/32.111-
6/schema/alarmIRPIOCs"
xmlns:ns9="http://www.3gpp.org/ftp/specs/archive/32_series/32.676#stateMan
agementIRP"
xmlns:ns10="http://www.3gpp.org/ftp/specs/archive/32_series/32.355#cSIRPNo
```

```
tif"
xmlns:ns11="http://www.3gpp.org/ftp/specs/archive/32_series/32.526#sonPoli
cyNrm"
xmlns:ns12="http://www.3gpp.org/ftp/specs/archive/32_series/32.626#generic
Nrm"
xmlns:ns13="http://www.3gpp.org/ftp/Specs/archive/32_series/32.347#FTIRPDa
ta"
xmlns:ns14="http://www.3gpp.org/ftp/specs/archive/32_series/32.355#cSIRPIO
Cs">
         <notificationHeaderAndBody>
            <ns4:Notification xsi:type="ns7:NotifyAckStateChanged"
xmlns:xsi="http://www.w3.org/2001/XMLSchema-instance">
               <ns4:header>
                  <ns4:objectClass>{[ManagedElement(Key=10.104.63.23-
qvpc)][Trap]}</ns4:objectClass>
                  <ns4:objectInstance>10.104.63.23-
qvpc</ns4:objectInstance>
                  <ns4:notificationId>1222171</ns4:notificationId>
                  <ns4:eventTime>2015-03-
23T18:38:52.000+05:45</ns4:eventTime>
                  <ns4:systemDN>ALARM-IRP=1</ns4:systemDN>

<ns4:notificationType>notifyAckStateChanged</ns4:notificationType>
               </ns4:header>
               <ns7:body>
                  <ns8:probableCause>Indeterminate</ns8:probableCause>
                  <ns8:perceivedSeverity>Major</ns8:perceivedSeverity>
                  <ns8:alarmType>Environmental Alarm</ns8:alarmType>
                  <ns8:alarmId>171</ns8:alarmId>
                  <ns8:ackState>Acknowledged</ns8:ackState>
                  <ns8:ackUserId>centraladmin</ns8:ackUserId>
               </ns7:body>
            </ns4:Notification>
         </notificationHeaderAndBody>
      </ns2:notify>
   </soap:Body>
</soap:Envelope>
```

11.5.5 Cleared Alarm Notification

```
<soap:Envelope xmlns:soap="http://schemas.xmlsoap.org/soap/envelope/">
   <soap:Body>
      <ns2:notify
xmlns:ns2="http://www.3gpp.org/ftp/Specs/archive/32_series/32.307/schema/3
2307-810/notification/NotificationIRPNtfData"
xmlns:ns3="http://www.3gpp.org/ftp/Specs/archive/32_series/32.317/schema/3
2317-810/GenericIRPData"
xmlns:ns4="http://www.3gpp.org/ftp/specs/archive/32_series/32.626#genericN
rm"
xmlns:ns5="http://www.3gpp.org/ftp/specs/archive/32_series/32.526#sonPolic
yNrm"
xmlns:ns6="http://www.3gpp.org/ftp/specs/archive/32_series/32.305#notifica
tion"
xmlns:ns7="http://www.3gpp.org/ftp/specs/archive/32_series/32.345#fTIRPIOC
s"
```

```
xmlns:ns8="http://www.3gpp.org/ftp/specs/archive/32_series/32.345#fTIRPNot
if"
xmlns:ns9="http://www.3gpp.org/ftp/specs/archive/32_series/32.355#cSIRPNot
if"
xmlns:ns10="http://www.3gpp.org/ftp/specs/archive/32_series/32.111#alarmIR
PNotif"
xmlns:ns11="http://www.3gpp.org/ftp/specs/archive/32_series/32.111-
6/schema/alarmIRPIOCs"
xmlns:ns12="http://www.3gpp.org/ftp/specs/archive/32_series/32.676#stateMa
nagementIRP"
xmlns:ns13="http://www.3gpp.org/ftp/Specs/archive/32_series/32.347#FTIRPDa
ta"
xmlns:ns14="http://www.3gpp.org/ftp/specs/archive/32_series/32.355#cSIRPIO
Cs">
         <notificationHeaderAndBody>
            <ns6:Notification xsi:type="ns10:NotifyClearedAlarm"
xmlns:xsi="http://www.w3.org/2001/XMLSchema-instance">
               <ns6:header>
                  <ns6:objectClass>ALARM-IRP</ns6:objectClass>
                  <ns6:objectInstance>qvpc-di</ns6:objectInstance>
                  <ns6:notificationId>12221073</ns6:notificationId>
                  <ns6:eventTime>2015-02-20T08:10:58.000-
05:00</ns6:eventTime>
                  <ns6:systemDN>ALARM-IRP</ns6:systemDN>

<ns6:notificationType>notifyClearedAlarm</ns6:notificationType>
               </ns6:header>
               <ns10:body>
                  <ns11:probableCause>Indeterminate</ns11:probableCause>
                  <ns11:perceivedSeverity>Cleared</ns11:perceivedSeverity>
                  <ns11:alarmType>Processing Error Alarm</ns11:alarmType>
                  <ns11:alarmId>1073</ns11:alarmId>
                  <ns11:clearUserId/>
               </ns10:body>
            </ns6:Notification>
         </notificationHeaderAndBody>
      </ns2:notify>
   </soap:Body>
</soap:Envelope>
```

11.5.6 Heartbeat Notification

```
<soap:Envelope xmlns:soap="http://schemas.xmlsoap.org/soap/envelope/">
   <soap:Body>
      <ns2:notify
xmlns:ns2="http://www.3gpp.org/ftp/Specs/archive/32_series/32.307/schema/3
2307-810/notification/NotificationIRPNtfData"
xmlns:ns3="http://www.3gpp.org/ftp/specs/archive/32_series/32.526#sonPolic
yNrm"
xmlns:ns4="http://www.3gpp.org/ftp/specs/archive/32_series/32.676#stateMan
agementIRP"
xmlns:ns5="http://www.3gpp.org/ftp/specs/archive/32_series/32.345#fTIRPIOC
s"
xmlns:ns6="http://www.3gpp.org/ftp/Specs/archive/32_series/32.347#FTIRPDat
a"
```

```
xmlns:ns7="http://www.3gpp.org/ftp/specs/archive/32_series/32.345#fTIRPNot
if"
xmlns:ns8="http://www.3gpp.org/ftp/specs/archive/32_series/32.111#alarmIRP
Notif" xmlns:ns9="http://www.3gpp.org/ftp/specs/archive/32_series/32.111-
6/schema/alarmIRPIOCs"
xmlns:ns10="http://www.3gpp.org/ftp/specs/archive/32_series/32.626#generic
Nrm"
xmlns:ns11="http://www.3gpp.org/ftp/specs/archive/32_series/32.305#notific
ation"
xmlns:ns12="http://www.3gpp.org/ftp/specs/archive/32_series/32.355#cSIRPNo
tif"
xmlns:ns13="http://www.3gpp.org/ftp/Specs/archive/32_series/32.317/schema/
32317-810/GenericIRPData"
xmlns:ns14="http://www.3gpp.org/ftp/specs/archive/32_series/32.355#cSIRPIO
Cs">
         <notificationHeaderAndBody>
            <ns11:Notification xsi:type="ns12:NotifyHeartbeat"
xmlns:xsi="http://www.w3.org/2001/XMLSchema-instance">
              <ns11:header>
                  <ns11:objectClass>IRPAGENT=CSIRP</ns11:objectClass>
                  <ns11:objectInstance>CSIRP=1</ns11:objectInstance>

<ns11:notificationId>2548114740317766438</ns11:notificationId>
                  <ns11:eventTime>2015-03-04T02:25:01.257-
05:00</ns11:eventTime>
                  <ns11:systemDN>CSIRP=1</ns11:systemDN>

<ns11:notificationType>notifyHeartBeat</ns11:notificationType>
               </ns11:header>
               <ns12:body>
                  <ns12:heartbeatPeriod>6</ns12:heartbeatPeriod>
                  <ns12:locator>channel 1</ns12:locator>
                  <ns12:triggerFlag>IRPAgent</ns12:triggerFlag>
               </ns12:body>
            </ns11:Notification>
         </notificationHeaderAndBody>
      </ns2:notify>
   </soap:Body>
</soap:Envelope>
```

11.6 FTP Configuration

File Transfer is required to transfer inventory files to a remote file server as specified by end user. User can configure the file server details using the script (ftpConfig.sh) available in the SIL installation directory ($SIL_HOME/bin).

Each FTP server has a primary and a secondary ftp server setup with fail-over option or replication option. In fail-over option, files are transferred to the secondary ftp server if the primary is not reachable or copied on to the configured directory on local machine if the secondary is not reachable as well. However, in replication option, files are transferred to both the primary and the secondary ftp servers. In cases, where both primary and secondary servers are not available, the files will be stored in the local storage directory.

For information on managing FTP for Standalone integration layer, see the Next Steps chapter in *Cisco Prime Network 4.2.3 Installation Guide*.

11.7 Useful Code Snippets for 3GPP

This section has sample code snippets to retrieve the inventory using 3GPP interface.

11.7.1 Useful Code Snippets for 3GPP Request Response

This section provides code snippets that can be used by a SOAP client to communicate with the 3GPP Web Service to perform the required operation.

```
// Java SOAP client Imports

import javax.xml.soap.SOAPBody;
import javax.xml.soap.SOAPConnection;
import javax.xml.soap.SOAPConnectionFactory;
import javax.xml.soap.SOAPElement;
import javax.xml.soap.SOAPEnvelope;
import javax.xml.soap.SOAPException;
import javax.xml.soap.SOAPFactory;
import javax.xml.soap.SOAPHeader;
import javax.xml.soap.SOAPMessage;
import javax.xml.soap.SOAPPart;
import javax.xml.transform.Source;


// Constructing the SOAP Header

SOAPHeader header = message.getSOAPHeader();
    if (header == null)
  header = envelope.addHeader();

// Constructing the contents for performing Authorization

        String AUTH_NS = "http://docs.oasis-open.org/wss/2004/01/oasis-
200401-wss-wssecurity-secext-1.0.xsd";
        String AUTH_PREFIX = "wsse";
        SOAPFactory soapFactory = SOAPFactory.newInstance();
        SOAPElement wsSecHeaderElm =
soapFactory.createElement("Security",
                    AUTH_PREFIX, AUTH_NS);
        SOAPElement userNameTokenElm = soapFactory.createElement(
                    "UsernameToken", AUTH_PREFIX, AUTH_NS);
        Name qname = envelope
                    .createName(
                                "Id",
                                "wsu",
                                "http://docs.oasis-
open.org/wss/2004/01/oasis-200401-wss-wssecurity-utility-1.0.xsd");
        userNameTokenElm.addAttribute(qname, "UsernameToken-27");
        SOAPElement userNameElm = soapFactory.createElement("Username",
                    AUTH_PREFIX, AUTH_NS);
        userNameElm.addTextNode(username);
```

```
        SOAPElement passwdElm = soapFactory.createElement("Password",
                    AUTH_PREFIX, AUTH_NS);
        passwdElm.addTextNode(password);
        Name passwordType = envelope.createName("Type");
        passwdElm
                    .addAttribute(
                                passwordType,
                                "http://docs.oasis-
open.org/wss/2004/01/oasis-200401-wss-username-token-profile-
1.0#PasswordText");
        userNameTokenElm.addChildElement(userNameElm);
        userNameTokenElm.addChildElement(passwdElm);

        // add child elements to the root element
        wsSecHeaderElm.addChildElement(userNameTokenElm);

        // add SOAP element for header to SOAP header object
        header.addChildElement(wsSecHeaderElm);
        // end: setting SOAP headers

        // start: setting SOAP body
        // Create and populate the body
        SOAPBody body = envelope.getBody();

        // Create the main element and namespace
        // Creates main element for "getAllInventory" Operation.

        SOAPElement bodyElement = body
                    .addChildElement(envelope
                                .createName(
                                            "getAllInventory",
                                            "inv",

  "http://www.3gpp.org/ftp/Specs/archive/32_series/ciscoTgppInventory/sch
ema/InventoryIRPData"));
        // Add content

  bodyElement.addChildElement("invokeIdentifierIn").addTextNode("123");
        bodyElement.addChildElement("queryXpathExp").addTextNode(
                    "/MD=CISCO_PRIME");

        // Save the message
        message.saveChanges();
        MimeHeaders headers = message.getMimeHeaders();
        headers.addHeader("SOAPAction", "getAllInventory");

// Set the destination
// Send the message and get the reply

SOAPMessage reply = connection.call(message, wsdlname);
```

11.7.2 Useful Code Snippets for 3GPP Notification Consumer

Developing a notification consumer involves implementing the 3GPP Notification IRP Webservice interface and publishing it.

- Sample Implementation of the Notification IRP Webservice interface:

```
import java.io.StringWriter;

import javax.jws.Oneway;
import javax.jws.WebMethod;
import javax.jws.WebParam;
import javax.xml.bind.JAXBContext;
import javax.xml.bind.JAXBElement;
import javax.xml.bind.JAXBException;
import javax.xml.bind.Marshaller;
import javax.xml.namespace.QName;
import javax.xml.ws.RequestWrapper;

import
org._3gpp.ftp.specs.archive._32_series._32_307.schema._32307_810.notificat
ion.notificationirpntfdata.AnySequenceType;
import
org._3gpp.ftp.specs.archive._32_series._32_307.schema._32307_810.notificat
ion.notificationirpntfsystem.NotificationIRPNtf;

@javax.jws.WebService(serviceName = "NotificationIRPNtf", portName =
"NotificationIRPNtf", targetNamespace =
"http://www.3gpp.org/ftp/Specs/archive/32_series/32.307/schema/32307-
810/notification/NotificationIRPNtfSystem", name = "NotificationIRPNtf",
endpointInterface =
"org._3gpp.ftp.specs.archive._32_series._32_307.schema._32307_810.notifica
tion.notificationirpntfsystem.NotificationIRPNtf")
public class TGPPNotificationConsumerImpl implements NotificationIRPNtf{

  @Oneway
  @RequestWrapper(localName = "notify", targetNamespace =
"http://www.3gpp.org/ftp/Specs/archive/32_series/32.307/schema/32307-
810/notification/NotificationIRPNtfData", className =
"org._3gpp.ftp.specs.archive._32_series._32_307.schema._32307_810.notifica
tion.notificationirpntfdata.Notify")
  @WebMethod(action =
"http://www.3gpp.org/ftp/Specs/archive/32_series/32.307/schema/32307-
810/notification/notify")
  public void notify(@WebParam(name = "notificationHeaderAndBody",
targetNamespace = "") AnySequenceType anySequence) {
        // Do something with the notification
        // This implementation just marshalls the notification and prints
it.
        parseJAXBElement(anySequence);
  }

  @SuppressWarnings({ "unchecked", "rawtypes" })
  public void parseJAXBElement(AnySequenceType anySequence) {

        try {
              JAXBContext jaxbContext =
JAXBContext.newInstance(anySequence.getClass(),

  org._3gpp.ftp.specs.archive._32_series._32.ObjectFactory.class);

              Marshaller jaxbMarshaller = jaxbContext.createMarshaller();
```

```
                // output pretty printed

    jaxbMarshaller.setProperty(Marshaller.JAXB_FORMATTED_OUTPUT, true);

                StringWriter stringWriter = new StringWriter();
                jaxbMarshaller.marshal(new JAXBElement(
                              new QName("uri","local"),
anySequence.getClass(), anySequence ), stringWriter);
                System.out.println("Notification Received....");
                System.out.println(stringWriter.getBuffer().toString());
          } catch (JAXBException e) {
                e.printStackTrace();
          }

    }
}
```

- Publishing the Webservice:

Once you have implemented Notification IRP Interface, you can publish the webservice using the Endpoint.publish method as below:

Endpoint.publish("http://10.105.39.39:9229/NotificationConsumer", new TGPPNotificationConsumerImpl());

12 References

Refer to the following document along with this guide.

- Addendum: Prime Network OSS Integration – Sample SOAP Request Response on Cisco Developer Network. To view the information on the CDN website, you must have a Cisco.com account with partner level access, or you must be a Prime Network licensee.