Cisco ASR 1000 Series Aggregation Services Routers SIP and SPA Hardware Installation Guide

November 24, 2008

Americas Headquarters
Cisco Systems, Inc.
170 West Tasman Drive
San Jose, CA 95134-1706
USA
http://www.cisco.com
Tel: 408 526-4000
800 553-NETS (6387)
Fax: 408 527-0883

Text Part Number: 3OL-14126-02

THE SPECIFICATIONS AND INFORMATION REGARDING THE PRODUCTS IN THIS MANUAL ARE SUBJECT TO CHANGE WITHOUT NOTICE. ALL STATEMENTS, INFORMATION, AND RECOMMENDATIONS IN THIS MANUAL ARE BELIEVED TO BE ACCURATE BUT ARE PRESENTED WITHOUT WARRANTY OF ANY KIND, EXPRESS OR IMPLIED. USERS MUST TAKE FULL RESPONSIBILITY FOR THEIR APPLICATION OF ANY PRODUCTS.

THE SOFTWARE LICENSE AND LIMITED WARRANTY FOR THE ACCOMPANYING PRODUCT ARE SET FORTH IN THE INFORMATION PACKET THAT SHIPPED WITH THE PRODUCT AND ARE INCORPORATED HEREIN BY THIS REFERENCE. IF YOU ARE UNABLE TO LOCATE THE SOFTWARE LICENSE OR LIMITED WARRANTY, CONTACT YOUR CISCO REPRESENTATIVE FOR A COPY.

The following information is for FCC compliance of Class A devices: This equipment has been tested and found to comply with the limits for a Class A digital device, pursuant to part 15 of the FCC rules. These limits are designed to provide reasonable protection against harmful interference when the equipment is operated in a commercial environment. This equipment generates, uses, and can radiate radio-frequency energy and, if not installed and used in accordance with the instruction manual, may cause harmful interference to radio communications. Operation of this equipment in a residential area is likely to cause harmful interference, in which case users will be required to correct the interference at their own expense.

The following information is for FCC compliance of Class B devices: The equipment described in this manual generates and may radiate radio-frequency energy. If it is not installed in accordance with Cisco's installation instructions, it may cause interference with radio and television reception. This equipment has been tested and found to comply with the limits for a Class B digital device in accordance with the specifications in part 15 of the FCC rules. These specifications are designed to provide reasonable protection against such interference in a residential installation. However, there is no guarantee that interference will not occur in a particular installation.

Modifying the equipment without Cisco's written authorization may result in the equipment no longer complying with FCC requirements for Class A or Class B digital devices. In that event, your right to use the equipment may be limited by FCC regulations, and you may be required to correct any interference to radio or television communications at your own expense.

You can determine whether your equipment is causing interference by turning it off. If the interference stops, it was probably caused by the Cisco equipment or one of its peripheral devices. If the equipment causes interference to radio or television reception, try to correct the interference by using one or more of the following measures:

• Turn the television or radio antenna until the interference stops.

• Move the equipment to one side or the other of the television or radio.

• Move the equipment farther away from the television or radio.

• Plug the equipment into an outlet that is on a different circuit from the television or radio. (That is, make certain the equipment and the television or radio are on circuits controlled by different circuit breakers or fuses.)

Modifications to this product not authorized by Cisco Systems, Inc. could void the FCC approval and negate your authority to operate the product.

The Cisco implementation of TCP header compression is an adaptation of a program developed by the University of California, Berkeley (UCB) as part of UCB's public domain version of the UNIX operating system. All rights reserved. Copyright © 1981, Regents of the University of California.

NOTWITHSTANDING ANY OTHER WARRANTY HEREIN, ALL DOCUMENT FILES AND SOFTWARE OF THESE SUPPLIERS ARE PROVIDED "AS IS" WITH ALL FAULTS. CISCO AND THE ABOVE-NAMED SUPPLIERS DISCLAIM ALL WARRANTIES, EXPRESSED OR IMPLIED, INCLUDING, WITHOUT LIMITATION, THOSE OF MERCHANTABILITY, FITNESS FOR A PARTICULAR PURPOSE AND NONINFRINGEMENT OR ARISING FROM A COURSE OF DEALING, USAGE, OR TRADE PRACTICE.

IN NO EVENT SHALL CISCO OR ITS SUPPLIERS BE LIABLE FOR ANY INDIRECT, SPECIAL, CONSEQUENTIAL, OR INCIDENTAL DAMAGES, INCLUDING, WITHOUT LIMITATION, LOST PROFITS OR LOSS OR DAMAGE TO DATA ARISING OUT OF THE USE OR INABILITY TO USE THIS MANUAL, EVEN IF CISCO OR ITS SUPPLIERS HAVE BEEN ADVISED OF THE POSSIBILITY OF SUCH DAMAGES.

CCDE, CCENT, Cisco Eos, Cisco Lumin, Cisco Nexus, Cisco StadiumVision, Cisco TelePresence, the Cisco logo, DCE, and Welcome to the Human Network are trademarks; Changing the Way We Work, Live, Play, and Learn and Cisco Store are service marks; and Access Registrar, Aironet, AsyncOS, Bringing the Meeting To You, Catalyst, CCDA, CCDP, CCIE, CCIP, CCNA, CCNP, CCSP, CCVP, Cisco, the Cisco Certified Internetwork Expert logo, Cisco IOS, Cisco Press, Cisco Systems, Cisco Systems Capital, the Cisco Systems logo, Cisco Unity, Collaboration Without Limitation, EtherFast, EtherSwitch, Event Center, Fast Step, Follow Me Browsing, FormShare, GigaDrive, HomeLink, Internet Quotient, IOS, iPhone, iQ Expertise, the iQ logo, iQ Net Readiness Scorecard, iQuick Study, IronPort, the IronPort logo, LightStream, Linksys, MediaTone, MeetingPlace, MeetingPlace Chime Sound, MGX, Networkers, Networking Academy, Network Registrar, PCNow, PIX, PowerPanels, ProConnect, ScriptShare, SenderBase, SMARTnet, Spectrum Expert, StackWise, The Fastest Way to Increase Your Internet Quotient, TransPath, WebEx, and the WebEx logo are registered trademarks of Cisco Systems, Inc. and/or its affiliates in the United States and certain other countries.

All other trademarks mentioned in this document or Website are the property of their respective owners. The use of the word partner does not imply a partnership relationship between Cisco and any other company. (0807R)

Any Internet Protocol (IP) addresses used in this document are not intended to be actual addresses. Any examples, command display output, and figures included in the document are shown for illustrative purposes only. Any use of actual IP addresses in illustrative content is unintentional and coincidental.

Cisco ASR 1000 Series Aggregation Services Routers SIP and SPA Hardware Installation Guide
© 2008 Cisco Systems, Inc. All rights reserved.

CONTENTS

Preface vii

Objectives vii

Document Revision History vii

Organization viii

Related Documentation viii

Obtaining Documentation and Submitting a Service Request ix

CHAPTER 1 **SIP and SPA Product Overview** 1-1

Introduction to SIPs and SPAs 1-1

SPA Interface Processors 1-1

Shared Port Adapters 1-2

SIP and SPA Compatibility 1-2

Modular Optics Compatibility 1-3

CHAPTER 2 **Overview: Cisco ASR 1000 Series Aggregation Services Routers SIPs** 2-1

SIP Summary 2-1

Checking Hardware and Software Compatibility 2-1

SPA Interface Addresses on SIPs 2-2

Identifying Slots and Subslots for SIPs and SPAs 2-2

Specifying the Slot Location for a SIP 2-2

Specifying the SIP Subslot Location for a SPA 2-4

Cisco ASR 1000 Series SPA Interface Processor Overview 2-5

Cisco ASR1000-SIP10 LEDs 2-5

Cisco ASR1000-SIP10 Physical Specifications 2-6

CHAPTER 3 **Overview: Cisco ASR 1000 Series Aggregation Services Routers Shared Port Adapters** 3-1

SPA Summary 3-1

Checking Hardware and Software Compatibility 3-2

2-Port and 4-Port Clear Channel T3/E3 Serial SPA Overview 3-2

2-Port and 4-Port T3/E3 Clear Channel Serial SPA LEDs 3-2

2-Port and 4-Port T3/E3 Clear Channel Serial SPA Interface Specifications 3-3

2-Port and 4-Port T3/E3 Clear Channel Serial SPA Cables and Connectors 3-3

2-Port and 4-Port Channelized T3 Serial SPA Overview 3-4

2-Port and 4-Port Channelized T3 Serial SPA LEDs 3-4
2-Port and 4-Port Channelized T3 Serial SPA Interface Specifications 3-5
2-Port and 4-Port Channelized T3 Serial SPA Cables and Connectors 3-5
4-Port Serial Interface SPA Overview 3-6
4-Port Serial Interface SPA LEDs 3-6
4-Port Serial Interface SPA Interface Specifications 3-7
4-Port Serial Interface SPA Cables, Connectors, and Pinouts 3-8
8-Port Channelized T1/E1 Serial SPA Overview 3-10
8-Port Channelized T1/E1 Serial SPA LEDs 3-10
8-Port Channelized T1/E1 Serial SPA Interface Specifications 3-11
8-Port Channelized T1/E1 Serial SPA Cables, Connectors, and Pinouts 3-11
1-Port Channelized STM-1/OC-3 SPA Overview 3-12
1-Port Channelized STM-1/OC-3 SPA LEDs 3-12
1-Port Channelized STM-1/OC-3 SPA Interface Specifications 3-13
1-Port Channelized STM-1/OC-3 SPA Cables and Connectors 3-13
4-Port and 8-Port Fast Ethernet SPA Overview 3-14
4-Port and 8-Port Fast Ethernet SPA LEDs 3-14
4-Port and 8-Port Fast Ethernet SPA Cables, Connectors, and Pinouts 3-15
1-Port 10-Gigabit Ethernet SPA Overview 3-16
1-Port 10-Gigabit Ethernet SPA LEDs 3-16
1-Port 10-Gigabit Ethernet SPA XFP Optical Transceiver Modules, Connectors, and Cables 3-17
XFP Connections 3-18
XFP Port Cabling Specifications 3-19
2-Port Gigabit Ethernet SPA Overview 3-19
2-Port Gigabit Ethernet SPA LEDs 3-19
2-Port Gigabit Ethernet SPA Cables, Connectors, and Pinouts 3-20
SFP Module Connections 3-20
Cables, Connectors, and Pinouts 3-20
5-Port Gigabit Ethernet SPA Overview 3-21
5-Port Gigabit Ethernet SPA LEDs 3-21
5-Port Gigabit Ethernet SPA Connectors 3-22
SFP Module Connections 3-22
8-Port Gigabit Ethernet SPA Overview 3-23
8-Port Gigabit Ethernet SPA LEDs 3-23
8-Port Gigabit Ethernet SPA Connectors 3-23
SFP Module Connections 3-23
10-Port Gigabit Ethernet SPA Overview 3-24
10-Port Gigabit Ethernet SPA LEDs 3-24
10-Port Gigabit Ethernet SPA Connectors 3-25

SFP Module Connections 3-25
SFP Module and Cabling Specifications for Gigabit Ethernet SPAs 3-25
SFP Module Specifications 3-26
SFP Module Cabling and Connection Equipment 3-28
CWDM and DWDM SFP Modules for the Gigabit Ethernet SPAs 3-29
CWDM SFP Module Specifications for All Gigabit Ethernet SPAs Using SFP Modules 3-29
DWDM SFP Module Specifications 3-29
2-Port and 4-Port OC-3c/STM-1 POS SPA Overview 3-31
2-Port and 4-Port OC-3c/STM-1 POS SPA LEDs 3-31
2-Port and 4-Port OC-3c/STM-1 POS SPA Interface Specifications 3-32
2-Port and 4-Port OC-3c/STM-1 POS SPA Optical Transceiver Modules and Cables 3-32
OC-3 Module Connections 3-34
2-Port and 4-Port OC-48c/STM-16 POS/RPR SPA Overview 3-35
2-Port and 4-Port OC-48c/STM-16 POS/RPR SPA LEDs 3-35
2-Port and 4-Port OC-48c/STM-16 POS/RPR SPA Interface Specifications 3-36
2-Port and 4-Port OC-48c/STM-16 POS/RPR SPA Cables, Optical Transceiver Modules, and Connectors 3-36
OC-48 Module Connections 3-37
1-Port OC-12c/STM-4 POS SPA Overview 3-38
1-Port OC-12c/STM-4 POS SPA LEDs 3-38
1-Port OC-12c/STM-4 POS SPA Interface Specifications 3-39
1-Port OC-12c/STM-4 POS SPA SFP Optical Transceiver Modules and Cables 3-39
OC-12 Module Connections 3-41

CHAPTER 4 **Preparing to Install a SIP or a Shared Port Adapter 4-1**
Required Tools and Equipment 4-1
Safety Guidelines 4-1
Safety Warnings 4-2
Warning Definition 4-2
Electrical Equipment Guidelines 4-8
Telephone Wiring Guidelines 4-8
Preventing Electrostatic Discharge Damage 4-8
Laser/LED Safety 4-9

CHAPTER 5 **Installing and Removing a SIP 5-1**
Handling SIPs 5-1
Online Insertion and Removal 5-2
Preparing for Online Removal of a SIP 5-2
Deactivating a SIP 5-3

Reactivating a SIP 5-3
Verifying Deactivation and Activation of a SIP 5-3
Preparing for Online Removal of a SPA 5-4
Deactivating a SPA 5-5
Reactivating a SPA 5-6
Verifying Deactivation and Activation of a SPA 5-7
Deactivation and Activation Configuration Examples 5-7
Deactivation of a SIP Configuration Example 5-7
Activation of a SIP Configuration Example 5-8
Deactivation of a SPA Configuration Example 5-8
Activation of a SPA Configuration Example 5-8
SIP Installation and Removal 5-8

CHAPTER 6 **Installing and Removing a Shared Port Adapter** 6-1
Handling SPAs 6-1
SPA Installation and Removal 6-2
Installing a SPA in a SIP 6-3
Removing a SPA from a SIP 6-3
Online Insertion and Removal 6-4
Optical Device Maintenance 6-4
Cleaning Optical Devices 6-4
Checking the Installation 6-4
Verifying the Installation 6-4
Using show Commands to Verify SIP and SPA Status 6-5
Using show Commands to Display SPA Information 6-6
SPA Blank Filler Plates 6-6
SPA Cable-Management Brackets 6-7

CHAPTER 7 **Troubleshooting the Installation** 7-1
Troubleshooting 7-1
Using debug Commands 7-2
Packing a SPA for Shipment 7-3
Packing a SIP for Shipment 7-5

INDEX

Preface

This preface describes the objectives and organization of this document and explains how to find additional information on related products and services. This preface contains the following sections:

- Objectives, page vii
- Document Revision History, page vii
- Organization, page viii
- Related Documentation, page viii
- Obtaining Documentation and Submitting a Service Request, page ix

Objectives

This document describes the SPA interface processors (SIPs) and shared port adapters (SPAs) that are supported on the Cisco ASR 1000 Series Aggregation Services Routers. This document also describes how to install the supported SIPs and SPAs and how to troubleshoot the installation.

Document Revision History

The Document Revision History records technical changes to this document. The table shows the Cisco IOS software release number and document revision number for the change, the date of the change, and a brief summary of the change.

Release No.	Revision	Date	Change Summary
IOS XE 2.2	OL-14126-02	September 10, 2008	Information added for the following SPAs: • 2-Port and 4-Port OC-48c/STM-16 POS/RPR SPA • 1-Port Channelized STM-1/OC-3 SPA
IOS XE 2.1	OL-14126-01	April 25, 2008	First release.

Organization

This document contains the following chapters:

Section	Title	Description
Chapter 1	SIP and SPA Product Overview	Provides an introduction to SPA interface processors (SIPs) and shared port adapters (SPAs).
Chapter 2	Overview: Cisco ASR 1000 Series Aggregation Services Routers SIPs	Provides a SIP and SPA compatibility summary. For each supported SIP, provides a summary of SIP characteristics and a SIP overview.
Chapter 3	Overview: Cisco ASR 1000 Series Aggregation Services Routers Shared Port Adapters	For each supported SPA, provides a summary of SPA characteristics and a SPA overview.
Chapter 4	Preparing to Install a SIP or a Shared Port Adapter	Describes the required tools, equipment, and safety guidelines for installing SIPs and SPAs.
Chapter 5	Installing and Removing a SIP	Describes the procedures for installing and removing a SIP on Cisco ASR 1000 Series Aggregation Services Routers.
Chapter 6	Installing and Removing a Shared Port Adapter	Describes the procedures for installing and removing a SPA on Cisco ASR 1000 Series Aggregation Services Routers. It also describes how to verify the SIP and SPA installation.
Chapter 7	Troubleshooting the Installation	Provides information for troubleshooting the installation of SIPs and SPAs. It also provides packing information to ship a SIP or SPA.

Related Documentation

The documentation listed below is available online and on the Documentation DVD.

Your router, switch, or gateway and the Cisco IOS software running on it contain extensive features, which are documented in the following resources:

- *Cisco ASR 1000 Series Aggregation Services Routers SIP and SPA Software Configuration Guide*
- Cisco IOS software:
  - For Cisco IOS configuration information and support, refer to the configuration guide or command reference for a Cisco IOS mainline release. You can also refer to the specific Cisco IOS software document for a particular feature.
  - To see if a feature is supported by a Cisco IOS release, to locate the software document for that feature, or to check the minimum software requirements of Cisco IOS software with the hardware installed on your router, Cisco maintains the Software Advisor tool on Cisco.com. You must be a registered user on Cisco.com to access this tool. To access Software Advisor, click **Login** at Cisco.com, type “Software Advisor” in the SEARCH box, and click **GO**. Click the link for the Software Advisor tool.

Note You can access Cisco IOS software configuration and hardware installation and maintenance documentation on the World Wide Web at http://www.cisco.com. Translated documentation is available at the following URL: http://www.cisco.com/public/countries_languages.shtml.

- For international agency compliance, safety, and statutory information for WAN interfaces, see the *Regulatory Compliance and Safety Information for the Cisco ASR 1000 Series Aggregation Services Routers.*

Obtaining Documentation and Submitting a Service Request

For information on obtaining documentation, submitting a service request, and gathering additional information, see the monthly *What's New in Cisco Product Documentation*, which also lists all new and revised Cisco technical documentation, at:

http://www.cisco.com/en/US/docs/general/whatsnew/whatsnew.html

Subscribe to the *What's New in Cisco Product Documentation* as a Really Simple Syndication (RSS) feed and set content to be delivered directly to your desktop using a reader application. The RSS feeds are a free service and Cisco currently supports RSS version 2.0.

CHAPTER 1

SIP and SPA Product Overview

This chapter provides an introduction to SPA interface processors (SIPs) and shared port adapters (SPAs). It includes the following sections:

- Introduction to SIPs and SPAs, page 1-1
- SIP and SPA Compatibility, page 1-2
- Modular Optics Compatibility, page 1-3

For software details for the specific SIPs and SPAs that are supported on the Cisco ASR 1000 Series Aggregation Services Routers, refer to the companion publication, *Cisco ASR 1000 Series Aggregation Services Routers SIP and SPA Software Configuration Guide*.

Introduction to SIPs and SPAs

Cisco ASR 1000 Series Aggregation Services Routers SIPs and SPAs are a carrier card and port adapter architecture that increases modularity, flexibility, and density across Cisco routers for network connectivity. This section describes the SIPs and SPAs and provides some guidelines for their use.

SPA Interface Processors

The following list describes some of the general characteristics of a SIP:

- A SIP is a carrier card that inserts into a router slot like a line card. It provides no network connectivity on its own.
- A SIP contains one or more subslots, which are used to house one or more SPAs. The SPA provides interface ports for network connectivity.
- During normal operation, the SIP should reside in the router fully populated either with functional SPAs in all subslots, or with a blank filler plate (SPA-BLANK=) inserted in all empty subslots.
- SIPs support online insertion and removal (OIR) with SPAs inserted in their subslots. SPAs also support OIR and can be inserted or removed independently from the SIP.

Note Fully populate all slots and subslots with blank filler plates or functional SPAs for maximum efficiency of the cooling system.

Shared Port Adapters

The following list describes some of the general characteristics of a SPA:

- A SPA is a modular type of port adapter that inserts into a subslot of a compatible SIP carrier card to provide network connectivity and increased interface port density. A SIP can hold one or more SPAs, depending on the SIP type.
- A single-height SPA inserts into one SIP subslot. (See Figure 1-1.)

Figure 1-1 Slot Orientation for SPAs

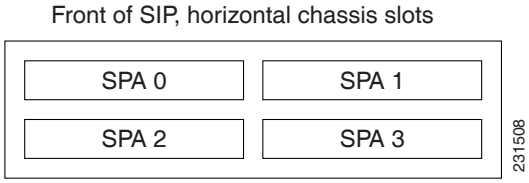

Caution SIP subslot 0 is not available on the Cisco ASR 1002 Router as that is the slot occupied by the integrated Route Processor with native Gigabit Ethernet ports.

- Each SPA provides a certain number of connectors, or ports, that are the interfaces to one or more networks. These interfaces can be individually configured using the Cisco IOS command-line interface (CLI).
- Either a blank filler plate or a functional SPA should reside in every subslot of a SIP during normal operation to maintain cooling integrity. Blank filler plates are available in single-height form only.
- SPAs support online insertion and removal (OIR). They can be inserted or removed independently from the SIP. SIPs also support OIR with SPAs inserted in their subslots.

SIP and SPA Compatibility

Table 1-1, Table 1-2, and Table 1-3 show SIP and SPA compatibility by SPA technology area on the Cisco ASR 1000 Series Routers.

Note For more information about the introduction of support for different SIPs and SPAs, refer to the "Release History" sections in the overview chapters of the *Cisco ASR 1000 Series Aggregation Services Routers SIP and SPA Software Configuration Guide*.

Table 1-1 SIP and SPA Compatibility Table for Serial SPAs

SPA	Product ID	SIP Supported: Cisco ASR1000-SIP10
2-Port and 4-Port T3/E3 Clear Channel Serial SPA	SPA-2XT3/E3 SPA-4XT3/E3	Yes
2-Port and 4-Port Channelized T3 Serial SPA	SPA-2XCT3/DS0 SPA-4XCT3/DS0	Yes

Table 1-1 SIP and SPA Compatibility Table for Serial SPAs (continued)

SPA	Product ID	SIP Supported: Cisco ASR1000-SIP10
4-Port Serial Interface SPA	SPA-4XT-Serial	Yes
8-Port Channelized T1/E1 Serial SPA	SPA-8XCHT1/E1	Yes
1-Port Channelized STM-1/OC-3 SPA	SPA-1XCHSTM1/OC3	Yes

Table 1-2 SIP and SPA Compatibility Table for Ethernet SPAs

SPA	Product ID	SIP Supported: Cisco ASR1000-SIP10
4-Port and 8-Port Fast Ethernet SPA	SPA-4X1FE-TX-V2 SPA-8X1FE-TX-V2	Yes
1-Port 10-Gigabit Ethernet SPA	SPA-1X10GE-L-V2	Yes
2-Port Gigabit Ethernet SPA	SPA-2X1GE-V2	Yes
5-Port Gigabit Ethernet SPA	SPA-5X1GE-V2	Yes
8-Port Gigabit Ethernet SPA	SPA-8X1GE-V2	Yes
10-Port Gigabit Ethernet SPA	SPA-10X1GE-V2	Yes

Table 1-3 SIP and SPA Compatibility Table for Packet Over SONET SPAs

SPA	Product ID	SIP Supported: Cisco ASR1000-SIP10
1-Port OC-12c/STM-4 POS SPA	SPA-1XOC12-POS	Yes
2-Port and 4-Port OC-3c/STM-1 POS SPA	SPA-2XOC3-POS SPA-4XOC3-POS	Yes
2-Port and 4-Port OC-48c/STM-16 POS/RPR SPA	SPA-2XOC48-POS/RPR SPA-4XOC48-POS/RPR	Yes

Modular Optics Compatibility

Some SPAs implement small form-factor pluggable (SFP) optical transceivers to provide network connectivity. An SFP module is a transceiver device that mounts into the front panel to provide network connectivity.

Cisco qualifies the SFP modules that can be used with SPAs.

Note The SPAs will only accept the SFP modules listed as supported in this document. An SFP module check is run every time an SFP module is inserted into a SPA and only SFP modules that pass this check will be usable.

Table 1-4, Table 1-5, Table 1-6, and Table 1-7 show the types of optics modules that have been qualified for use with a SPA.

Table 1-4 Gigabit Ethernet SPA Optics Compatibility

SPA	Qualified Optics Modules (Cisco Part Numbers)
1-Port 10-Gigabit Ethernet SPA	• XFP-10GLR-OC192SR • XFP-10GER-OC192IR • XFP-10GZR-OC192LR
5-Port Gigabit Ethernet SPA	• SFP-GE-S • SFP-GE-L • SFP-GE-Z • SFP-GE-T • GLC-FE-100FX
2-Port Gigabit Ethernet SPA 8-Port Gigabit Ethernet SPA	• SFP-GE-S • SFP-GE-L • SFP-GE-Z • SFP-GE-T
10-Port Gigabit Ethernet SPA	• SFP-GE-S • SFP-GE-L • SFP-GE-Z • GLC-FE-100FX

Table 1-5 Gigabit Ethernet SPA CWDM Optics Compatibility for All Gigabit Ethernet SPAs Supported on the Cisco ASR 1000 Series Routers

Qualified Optics Modules (Cisco Part Numbers)
CWDM-SFP-1470=
CWDM-SFP-1490=
CWDM-SFP-1510=
CWDM-SFP-1530=
CWDM-SFP-1550=
CWDM-SFP-1570=
CWDM-SFP-1590=
CWDM-SFP-1610=

Table 1-6 Gigabit Ethernet SPA DWDM Optics Compatibility

SPA	Qualified Optics Modules (Cisco Part Numbers)
2-Port Gigabit Ethernet SPA	DWDM-SFP-3033=
5-Port Gigabit Ethernet SPA	DWDM-SFP-3112=
8-Port Gigabit Ethernet SPA	DWDM-SFP-3190=
10-Port Gigabit Ethernet Spa	DWDM-SFP-3268=
	DWDM-SFP-3425=
	DWDM-SFP-3504=
	DWDM-SFP-3582=
	DWDM-SFP-3661=
	DWDM-SFP-3819=
	DWDM-SFP-3898=
	DWDM-SFP-3977=
	DWDM-SFP-4056=
	DWDM-SFP-4214=
	DWDM-SFP-4294=
	DWDM-SFP-4373=
	DWDM-SFP-4453=
	DWDM-SFP-4612=
	DWDM-SFP-4692=
	DWDM-SFP-4772=
	DWDM-SFP-4851=
	DWDM-SFP-5012=
	DWDM-SFP-5092=
	DWDM-SFP-5172=
	DWDM-SFP-5252=
	DWDM-SFP-5413=
	DWDM-SFP-5494=
	DWDM-SFP-5575=
	DWDM-SFP-5655=
	DWDM-SFP-5817=
	DWDM-SFP-5898=
	DWDM-SFP-5979=
	DWDM-SFP-6061=

Table 1-7 POS SPA SFP and CWDM Optics Compatibility

SPA	Qualified Optics Modules (Cisco Part Numbers)
2-Port and 4-Port OC-3c/STM-1 POS SPA	• SFP-OC3-MM • SFP-OC3-SR • SFP-OC3-IR1 • SFP-OC3-LR1 • SFP-OC3-LR2
2-Port and 4-Port OC-48c/STM-16 POS/RPR SPA	• SFP-OC48-SR • SFP-OC48-IR1 • SFP-OC48-LR2
1-Port OC-12c/STM-4 POS SPA	• SFP-OC12-MM • SFP-OC12-SR • SFP-OC12-IR1 • SFP-OC12-LR1 • SFP-OC12-LR2

CHAPTER 2

Overview: Cisco ASR 1000 Series Aggregation Services Routers SIPs

This chapter describes the SPA interface processors (SIPs) that are supported on the Cisco ASR 1000 Series Aggregation Services Routers and contains the following sections:

- SIP Summary, page 2-1
- SPA Interface Addresses on SIPs, page 2-2
- Identifying Slots and Subslots for SIPs and SPAs, page 2-2
- Cisco ASR 1000 Series SPA Interface Processor Overview, page 2-5

SIP Summary

Summary descriptions of the SIPs that are supported on the Cisco ASR 1000 Series Routers are shown in Table 2-1.

Note The Description column indicates the aggregate bandwidth supported by the SIP across all subslots—not per SPA subslot.

Table 2-1 SIP Summary

SIP	Product Number	Description	Maximum Number of SPAs	Minimum Cisco IOS Release
Cisco ASR 1000 Series SIP	ASR-1000-SIP10	10-Gbps SPA interface processor	4	IOS XE 2.2

Checking Hardware and Software Compatibility

To check the minimum software requirements of Cisco IOS software with the hardware installed on your router, Cisco maintains the Software Advisor tool on Cisco.com. This tool does not verify whether SIPs or SPAs within a system are compatible, but it does provide the minimum Cisco IOS requirements for individual hardware modules or components.

Note Access to this tool is limited to users with Cisco.com login accounts.

To access Software Advisor, click **Login** at Cisco.com, type "Software Advisor" in the SEARCH box, and click **GO**. Click the link for the Software Advisor tool.

Choose a product family or enter a specific product number to search for the minimum supported software release needed for your hardware.

SPA Interface Addresses on SIPs

Interface addresses specify the physical location of each interface on a router or switch. Table 2-2 describes how to identify the interface addresses for SPAs supported on the SIPs.

Table 2-2 SPA Interface Addresses

SIP	Address Format	Description
Cisco ASR 1000 Series SIP	*router-module-slot/SIP-subslot/SPA-port-number*	Router module slot—0 through 2 SIP subslot—0 through 3 SPA port number—0 through x **Note** The maximum number of SPA ports depends on the type of SPA.

Identifying Slots and Subslots for SIPs and SPAs

This section describes how to specify the physical locations of a SIP and SPA on the Cisco ASR 1000 Series Routers within the command-line interface (CLI) to configure or monitor the devices.

Specifying the Slot Location for a SIP

The Cisco ASR 1000 Series Routers support different chassis models, each of which supports a certain number of chassis slots.

- The Cisco ASR 1006 Router supports three chassis slots for SIPs.
- The Cisco ASR 1004 Router supports two chassis slots for SIPs.
- The Cisco ASR 1002 Router supports one chassis slot for a SIP that is permanently installed, and the integrated Route Processor and Gigabit Ethernet ports reside in SPA subslot 0.

Figure 2-1 shows an example of a SIP installed on a Cisco ASR 1006 Router. The router has three chassis slots for SIPs, and can accommodate a total of twelve SPAs.

Figure 2-1 SIP and SPAs Installed in a Cisco ASR 1006 Router

Some commands allow you to display information about the SIP itself, such as **show platform**, **show diag**, and **show diag subslot**. These commands require you to specify the chassis slot location where the SIP that you want information about is installed.

For example, to display status and slot-related information about the SIP installed in any of the chassis slots, enter the following command:

```
Router# show platform
Chassis type: ASR1006

Slot      Type                State                 Insert time (ago)
--------- ------------------- --------------------- -----------------
0         ASR1000-SIP10       ok                    2d21h
 0/0      SPA-2X1GE-V2        ok                    2d21h
 0/1      SPA-2X1GE-V2        ok                    2d21h
 0/2      SPA-2X1GE-V2        ok                    2d21h
 0/3      SPA-1XOC12-POS      ok                    2d21h
1         ASR1000-SIP10       ok                    22:46:22
 1/0      SPA-1X10GE-L-V2     ok                    22:45:29
 1/1      SPA-1XOC12-POS      ok                    22:45:26
 1/2      SPA-1X10GE-L-V2     ok                    22:45:22
 1/3      SPA-1XOC12-POS      ok                    22:45:18
2         ASR1000-SIP10       ok                    1d20h
 2/0      SPA-5X1GE-V2        ok                    1d20h
 2/1      SPA-5X1GE-V2        ok                    1d20h
 2/2      SPA-5X1GE-V2        ok                    1d20h
 2/3      SPA-5X1GE-V2        ok                    1d20h
R0        ASR1000-RP1         ok, active            3d20h
F0        ASR1000-ESP10       ok, active            3d20h
P0        ASR1006-PWR-AC      ok                    3d20h
P1        ASR1006-FAN         ok                    3d20h
```

```
Slot      CPLD Version        Firmware Version
--------- ------------------- ----------------------------------------
0         07091401            12.2(33r)XN2
1         07091401            12.2(33r)XN2
2         07091401            12.2(33r)XN2
R0        07082312            12.2(33r)XN2
```

Specifying the SIP Subslot Location for a SPA

SIP subslots begin their numbering with "0" and have a horizontal orientation, as shown in the "SIP and SPA Product Overview" chapter of the *Cisco ASR 1000 Series Aggregation Services Routers SIP and SPA Software Configuration Guide*.

The Cisco ASR 1000 series SIP supports four subslots for the installation of SPAs. As shown in Figure 2-2, the subslot locations are oriented as follows:

- SIP subslot 0—Top-left subslot
- SIP subslot 1—Top-right subslot
- SIP subslot 2—Bottom-left subslot
- SIP subslot 3—Bottom-right subslot

Note In the Cisco ASR 1002 Router, SIP subslot 0 is not available for SPA insertion. It is the slot that is used for the integrated Route Processor and Gigabit Ethernet ports.

Figure 2-2 shows the SPA numbering sequence on a Cisco ASR 1000 Series Routers SIP.

Figure 2-2 Cisco ASR 1000 Series SIP SPA Numbering

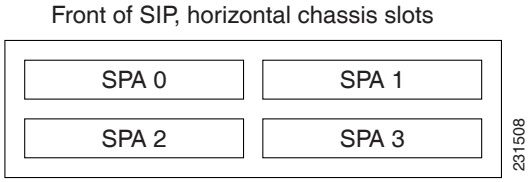

The SIP subslot numbering is indicated by a small numeric label beside the subslot on the faceplate.

Just as with the SIPs, some commands allow you to display information about the SPA itself, such as **show diag subslot**. These commands require you to specify both the physical location of the SIP and SPA in the format, *slot*/*subslot*, where:

- *slot*—Specifies the chassis slot number in the Cisco ASR 1000 Series Routers where the SIP is installed.
- *subslot*—Specifies the slot of the SIP where the SPA is installed.

To display the operational status for a SPA installed in the SIP, enter the **show platform** command.

```
Router# show platform
Chassis type: ASR1006

Slot      Type                State                 Insert time (ago)
--------- ------------------- --------------------- -----------------
0         ASR1000-SIP10       ok                    2d21h
 0/0      SPA-2X1GE-V2        ok                    2d21h
 0/1      SPA-2X1GE-V2        ok                    2d21h
```

```
 0/2       SPA-2X1GE-V2         ok                    2d21h
 0/3       SPA-1XOC12-POS       ok                    2d21h
1          ASR1000-SIP10        ok                    22:46:22
 1/0       SPA-1X10GE-L-V2      ok                    22:45:29
 1/1       SPA-1XOC12-POS       ok                    22:45:26
 1/2       SPA-1X10GE-L-V2      ok                    22:45:22
 1/3       SPA-1XOC12-POS       ok                    22:45:18
2          ASR1000-SIP10        ok                    1d20h
 2/0       SPA-5X1GE-V2         ok                    1d20h
 2/1       SPA-5X1GE-V2         ok                    1d20h
 2/2       SPA-5X1GE-V2         ok                    1d20h
 2/3       SPA-5X1GE-V2         ok                    1d20h
R0         ASR1000-RP1          ok, active            3d20h
F0         ASR1000-ESP10        ok, active            3d20h
P0         ASR1006-PWR-AC       ok                    3d20h
P1         ASR1006-FAN          ok                    3d20h

Slot       CPLD Version         Firmware Version
---------- -------------------- ------------------------------------
0          07091401             12.2(33r)XN2
1          07091401             12.2(33r)XN2
2          07091401             12.2(33r)XN2
R0         07082312             12.2(33r)XN2
```

Cisco ASR 1000 Series SPA Interface Processor Overview

The following sections describe the Cisco ASR1000-SIP10.

- Cisco ASR1000-SIP10 LEDs, page 2-5
- Cisco ASR1000-SIP10 Physical Specifications, page 2-6

Cisco ASR1000-SIP10 LEDs

The Cisco ASR1000-SIP10 has two LEDs, as shown in Figure 2-3.

Figure 2-3 Cisco ASR1000-SIP10 Faceplate

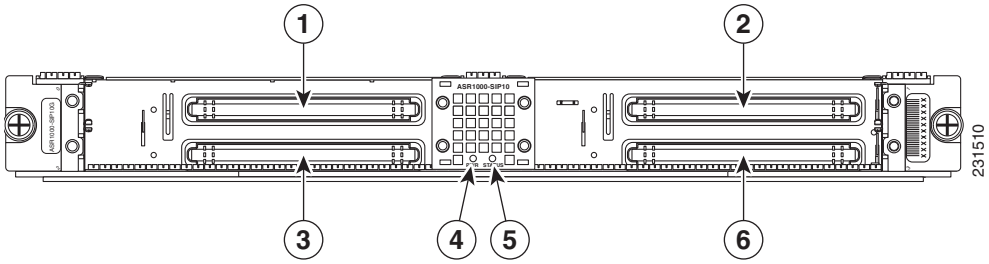

1	SPA, subslot 0	**4**	PWR LED
2	SPA, subslot 1	**5**	STATUS LED
3	SPA, subslot 2	**6**	SPA, subslot 3

The Cisco ASR1000-SIP10 LEDs are described in Table 2-3.

Table 2-3 Cisco ASR1000-SIP10 LEDs

LED Label	Color	State	Meaning
STATUS	Red	On	The Cisco ASR1000-SIP10 has encountered an error.
	Yellow	On	The Cisco ASR1000-SIP10 is loading.
	Green	On	The Cisco ASR1000-SIP10 is online.
	Off	Off	The Cisco ASR1000-SIP10 is powered off.
PWR	Green	On	The Cisco ASR1000-SIP10 is powered on.
	Off	Off	The Cisco ASR1000-SIP10 is powered off.

Cisco ASR1000-SIP10 Physical Specifications

The Cisco ASR1000-SIP10 physical specifications are shown in Table 2-4.

Table 2-4 Cisco ASR1000-SIP10 Physical Specifications

Description	Specifications
Physical dimension (HxWxD)	1.630 inches (41.4 mm) x 16.725 inches (424.8 mm) x 14.187 inches (360.3 mm)
Shipping weight	8.5 lb (3.9 kg)
Operating temperature	Nominal—40.9 to 104°F (5 to 40°C) Short Term—40.9 to 131°F (5 to 55°C)
Relative humidity	Operating Humidity Nominal—5% to 85% noncondensing Operating Humidity Short Term—5% to 90% noncondensing
Storage temperature	–40 to 167°F (–20 to 70°C)

CHAPTER 3

Overview: Cisco ASR 1000 Series Aggregation Services Routers Shared Port Adapters

This chapter describes the shared port adapters (SPAs) that are supported on the Cisco ASR 1000 Series Aggregation Services Routers and contains the following sections:

- SPA Summary, page 3-1

Serial SPAs

- 2-Port and 4-Port Clear Channel T3/E3 Serial SPA Overview, page 3-2
- 2-Port and 4-Port Channelized T3 Serial SPA Overview, page 3-4
- 4-Port Serial Interface SPA Overview, page 3-6
- 8-Port Channelized T1/E1 Serial SPA Overview, page 3-10
- 1-Port Channelized STM-1/OC-3 SPA Overview, page 3-12

Ethernet SPAs

- 4-Port and 8-Port Fast Ethernet SPA Overview, page 3-14
- 1-Port 10-Gigabit Ethernet SPA Overview, page 3-16
- 2-Port Gigabit Ethernet SPA Overview, page 3-19
- 5-Port Gigabit Ethernet SPA Overview, page 3-21
- 8-Port Gigabit Ethernet SPA Overview, page 3-23
- 10-Port Gigabit Ethernet SPA Overview, page 3-24

Packet Over SONET SPAs

- 2-Port and 4-Port OC-3c/STM-1 POS SPA Overview, page 3-31
- 2-Port and 4-Port OC-48c/STM-16 POS/RPR SPA Overview, page 3-35
- 1-Port OC-12c/STM-4 POS SPA Overview, page 3-38

SPA Summary

The SPAs listed in this section are supported on the Cisco ASR 1000 Series Aggregation Services Routers.

Checking Hardware and Software Compatibility

To check the minimum software requirements of Cisco IOS software with the hardware installed on your router, Cisco maintains the Software Advisor tool on Cisco.com. This tool does not verify whether SIPs or SPAs within a system are compatible, but it does provide the minimum Cisco IOS requirements for individual hardware modules or components.

Note Access to this tool is limited to users with Cisco.com login accounts.

To access Software Advisor, click **Login** at Cisco.com, type "Software Advisor" in the SEARCH box, and click **GO**. Click the link for the Software Advisor tool.

Choose a product family or enter a specific product number to search for the minimum supported software release needed for your hardware.

2-Port and 4-Port Clear Channel T3/E3 Serial SPA Overview

The following sections describe the 2-Port and 4-Port T3/E3 Clear Channel Serial SPA:

- 2-Port and 4-Port T3/E3 Clear Channel Serial SPA LEDs, page 3-2
- 2-Port and 4-Port T3/E3 Clear Channel Serial SPA Interface Specifications, page 3-3
- 2-Port and 4-Port T3/E3 Clear Channel Serial SPA Cables and Connectors, page 3-3

2-Port and 4-Port T3/E3 Clear Channel Serial SPA LEDs

The 2-Port and 4-Port T3/E3 Clear Channel Serial SPA has three types of LEDs: two LEDs for each port on the SPA, and one STATUS LED, as shown in Figure 3-1.

Figure 3-1 4-Port T3/E3 Clear Channel Serial SPA Faceplate

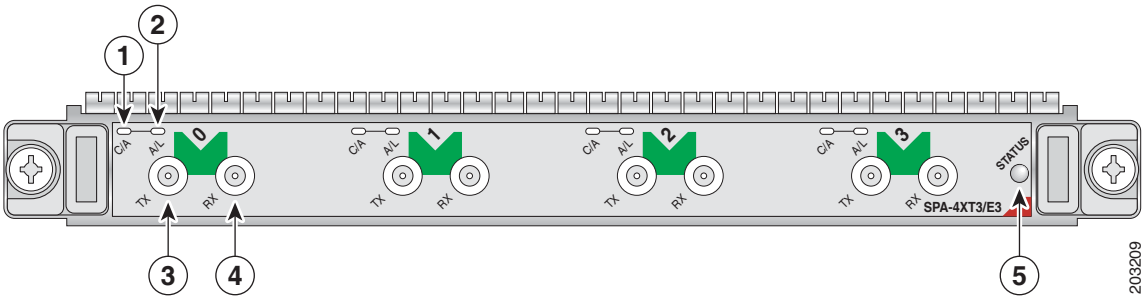

1	C/A (Carrier/Alarm) LED	**4**	RX (Receive) connector
2	A/L (Active Loopback) LED	**5**	STATUS LED
3	TX (Transmit) connector		

Table 3-1 describes the 2-Port and 4-Port T3/E3 Clear Channel Serial SPA LEDs.

Table 3-1 2-Port and 4-Port T3/E3 Clear Channel Serial SPA LEDs

LED Label	Color	State	Meaning
C/A	Off	Off	Port is not enabled by software.
	Green	On	Port is enabled by software, and there is a valid E3 or T3 signal without any alarms.
	Amber	On	Port is enabled by software, and there is at least one alarm.
A/L	Off	Off	Port is not enabled by software.
	Green	On	Port is enabled by software, and loopback is off.
	Amber	On	Port is enabled by software, and loopback is on.
STATUS	Off	Off	SPA power is off.
	Green	On	SPA is ready and operational.
	Amber	On	SPA power is on and good, and the SPA is being configured.

2-Port and 4-Port T3/E3 Clear Channel Serial SPA Interface Specifications

The framer processes incoming and outgoing T3 (cbit, m13/m23, and unframe) and E3 (g751, g832, and unframe) frames. The framer operates at T3/E3 line rates (44.736Mbps /34.368 Mbps) depending on the mode in which it is configured.

Packet data is transported with a user-configurable encapsulation (such as Point-to-Point Protocol [PPP] or High-Level Data Link Control [HDLC]), and is mapped to T3 and E3 frames. The encapsulations add transport overhead to the packet of data frames before transporting, and are stripped when a packet is transported to the far end.

The T3/E3 SPA interface is compliant with ANSI and Telco standards. The interface also provides support for Management Information Base (MIB) RFC 2496 and T1.231.

2-Port and 4-Port T3/E3 Clear Channel Serial SPA Cables and Connectors

The interface connectors on the 2-Port and 4-Port T3/E3 Clear Channel Serial SPA are 75-ohm coaxial Siemax types, with one connector and cable for transmit (TX) and one for receive (RX).

The following cables can be used with the 2-Port and 4-Port T3/E3 Clear Channel Serial SPA. The cables have BNC connectors on one end and the Siemax connectors on the other.

- CAB-T3E3-RF-BNC-M (T3 or E3 Cable, 1.0/2.3 RF to BNC-Male, 10 feet)
- CAB-T3E3-RF-BNC-F (T3 or E3 Cable, 1.0/2.3 RF to BNC-Female, 10 feet)
- CAB-T3E3-RF-OPEN (T3 or E3 Cable, 1.0/2.3 RF to BNC-Open end, 10 feet)

Note The Cisco cable part numbers are 72-4124-01 (with male BNC end) and 72-4131-01 (with female BNC end).

Figure 3-1 shows the connectors on the 4-Port T3/E3 Clear Channel Serial SPA, and Table 3-2 describes the signal descriptions for these connectors.

Table 3-2 2-Port and 4-Port T3/E3 Clear Channel Serial SPA Connectors

Connector Label	Meaning
TX	Transmitted signals appear on the center contact, and the outer shield is ground for the 75-ohm RG-59 coaxial cable you attach to the TX Siemax connector.
RX	Received signals appear on the center contact, and the outer shield is ground for the 75-ohm RG-59 coaxial cable you attach to the RX Siemax connector.

2-Port and 4-Port Channelized T3 Serial SPA Overview

The following sections describe the 2-Port and 4-Port Channelized T3 Serial SPA:

- 2-Port and 4-Port Channelized T3 Serial SPA LEDs, page 3-4
- 2-Port and 4-Port Channelized T3 Serial SPA Interface Specifications, page 3-5
- 2-Port and 4-Port Channelized T3 Serial SPA Cables and Connectors, page 3-5

2-Port and 4-Port Channelized T3 Serial SPA LEDs

The 2-Port and 4-Port Channelized T3 Serial SPA has three types of LEDs: two LEDs for each port on the SPA, and one STATUS LED, as shown in Figure 3-2.

Figure 3-2 4-Port Channelized T3 Serial SPA Faceplate

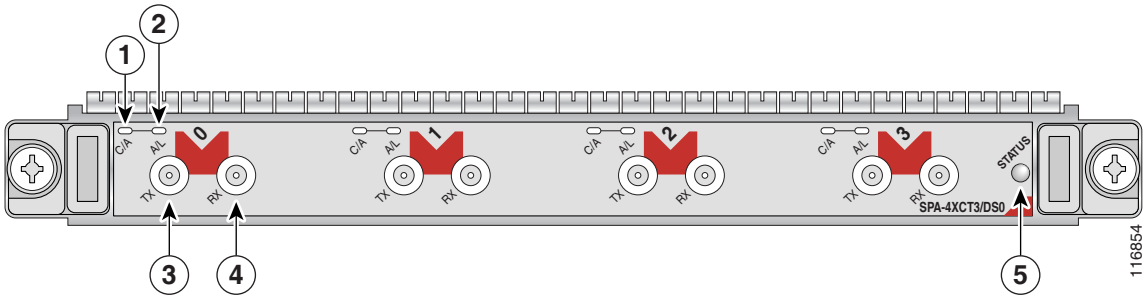

1	C/A (Carrier/Alarm) LED	4	RX (Receive) connector
2	A/L (Active Loopback) LED	5	STATUS LED
3	TX (Transmit) connector		

Table 3-3 describes the 2-Port and 4-Port Channelized T3 Serial SPA LEDs.

Table 3-3 2-Port and 4-Port Channelized T3 Serial SPA LEDs

LED Label	Color	State	Meaning
C/A	Off	Off	Port is not enabled by software.
	Green	On	Port is enabled by software, and there is a valid T3 signal without any alarms.
	Amber	On	Port is enabled by software, and there is at least one alarm.
A/L	Off	Off	Port is not enabled by software.
	Green	On	Port is enabled by software, loopback is off.
	Amber	On	Port is enabled by software, loopback is on.
STATUS	Off	Off	SPA power is off.
	Green	On	SPA is ready and operational.
	Amber	On	SPA power is on and good, and SPA is being configured.

2-Port and 4-Port Channelized T3 Serial SPA Interface Specifications

The framer processes incoming and outgoing T3 frames (cbit, m13/m23, and unframe). The framer operates at T3 line rates (44.2 Mbps).

Packet data is transported with a user-configurable encapsulation (such as Point-to-Point Protocol [PPP] or High-Level Data Link Control [HDLC]), and is mapped to T3 frames. The encapsulations add transport overhead to the packet of data frames before transporting, and are stripped when a packet is transported to the far end.

The T3 SPA interface is compliant with ANSI and Telco standards. The interface also provides support for Management Information Base (MIB) RFC 2495, RFC 2496, and T1.231.

2-Port and 4-Port Channelized T3 Serial SPA Cables and Connectors

The interface connectors on the 2-Port and 4-Port Channelized T3 Serial SPA are 75-ohm coaxial Siemax types, with one connector and cable for transmit (TX) and one for receive (RX).

The following cables can be used with the 2-Port and 4-Port Channelized T3 Serial SPA. The cables have BNC connectors on one end and the Siemax connectors on the other.

- CAB-T3E3-RF-BNC-M (T3 or E3 Cable, 1.0/2.3 RF to BNC-Male, 10 feet)
- CAB-T3E3-RF-BNC-F (T3 or E3 Cable, 1.0/2.3 RF to BNC-Female, 10 feet)
- CAB-T3E3-RF-OPEN (T3 or E3 Cable, 1.0/2.3 RF to BNC-Open end, 10 feet)

Note The Cisco cable part numbers are 72-4124-01 (with Male BNC end) and 72-4131-01 (with Female BNC end).

Figure 3-2 shows the connectors on the 4-Port Channelized T3 Serial SPA, and Table 3-4 provides the signal descriptions for these connectors.

Table 3-4 2-Port and 4-Port Channelized T3 Serial SPA Connectors

Connector Label	Meaning
TX	Transmitted signals appear on the center contact, and the outer shield is ground for the 75-ohm RG-59 coaxial cable you attach to the TX Siemax connector.
RX	Received signals appear on the center contact, and the outer shield is ground for the 75-ohm RG-59 coaxial cable you attach to the RX Siemax connector.

4-Port Serial Interface SPA Overview

The following sections describe the 4-Port Serial Interface SPA:

- 4-Port Serial Interface SPA LEDs, page 3-6
- 4-Port Serial Interface SPA Interface Specifications, page 3-7
- 4-Port Serial Interface SPA Cables, Connectors, and Pinouts, page 3-8

4-Port Serial Interface SPA LEDs

The 4-Port Serial Interface SPA has three types of LEDs: two LEDs for each port on the SPA, and one STATUS LED, as shown in Figure 3-3.

Figure 3-3 4-Port Serial Interface SPA Faceplate

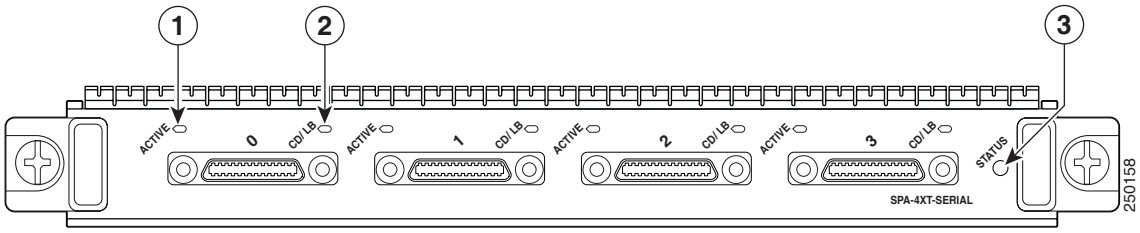

1	ACTIVE LED	3	STATUS LED
2	CD/LB (Carrier Detect / Loopback) LED		

Table 3-5 describes the 4-Port Serial Interface SPA LEDs.

Table 3-5 4-Port Serial Interface LEDs

LED Label	Color	State	Function
ACTIVE	Off	Off	The SPA port is not enabled by the field-programmable gate array (FPGA). The SPA port does not have any frame activity on RX/TX Layer 1.

Table 3-5 4-Port Serial Interface LEDs (continued)

	Green	Blinking	The SPA port is enabled by the FPGA, and it has Rx/Tx Layer 1 frame activity.
CD/LB	Amber	On	This state is unused.
	Off	Off	The SPA port is not enabled.
	Green	On	The SPA port is enabled, and DTR, DSR, RTS, CTS, or DCD is active.
	Amber	On	The SPA port is enabled, and local loopback or internal loopback is active.
STATUS	Off	Off	The SPA is powered off (power is not within required specification) or Status On conditions not met.
	Green	On	The SPA is powered on and operational (power is within required specification, and initialization is complete). The following conditions must be met before the STATUS LED goes on: • The SPA is correctly connected and receiving power. • The SPA equipped card or router contains a valid microcode version that has been downloaded successfully. • The bus recognizes the SPA. • The SPA is up to date on the FPD versions required by the router software.
	Amber	On	The SPA is powered on but initializing (power is within required specification, but the hardware and software initialization sequence is not complete).

4-Port Serial Interface SPA Interface Specifications

The 4-Port Serial Interface SPA supports six interfaces in DCE and DTE mode:

- V.35
- EIA/TIA-232
- EIA/TIA-449
- EIA/TIA-530
- EIA/TIA-530A
- X.21

The 4-Port Serial Interface SPA provides up to four synchronous serial interfaces. Each port allows a maximum bandwidth of 8064 Kbps except for the X.21 and EIA/TIA-232 interfaces.

Use EIA/TIA-232 for speeds of 128 kilobits per second (kbps) and below. Use X.21 for speeds less than 2 Mbps. Use EIA/TIA-449, V.35, EIA/TIA-530, or EIA/TIA-530A for higher speeds.

4-Port Serial Interface SPA Cables, Connectors, and Pinouts

The 4-Port Serial Interface SPA uses Smart Serial cable interfaces that support two independent serial interface ports. The serial end of the Smart Serial cable is a 26-pin connector.

Table 3-6 lists the 4-Port Serial Interface SPA cable interfaces.

Table 3-6 4-Port Serial Interface SPA Cables

Product Number	Cable Type	Length	Connector Type
CAB-SS-V35MT	V.35 DTE	10 feet (3 meters)	Male
CAB-SS-V35FC	V.35 DCE	10 feet (3 meters)	Female
CAB-SS-232MT	EIA/TIA-232 DTE	10 feet (3 meters)	Male
CAB-SS-232FC	EIA/TIA-232 DCE	10 feet (3 meters)	Female
CAB-SS-449MT	EIA/TIA-449 DTE	10 feet (3 meters)	Male
CAB-SS-449FC	EIA/TIA-449 DCE	10 feet (3 meters)	Female
CAB-SS-X21MT	X.21 DTE	10 feet (3 meters)	Male
CAB-SS-X21FC	X.21 DCE	10 feet (3 meters)	Female
CAB-SS-530MT	EIA/TIA-530 DTE	10 feet (3 meters)	Male
CAB-SS-530AMT	EIA/TIA-530A DTE	10 feet (3 meters)	Male

Figure 3-4 shows the Smart Serial cable connectors.

Figure 3-4 Smart Serial Cable Connectors

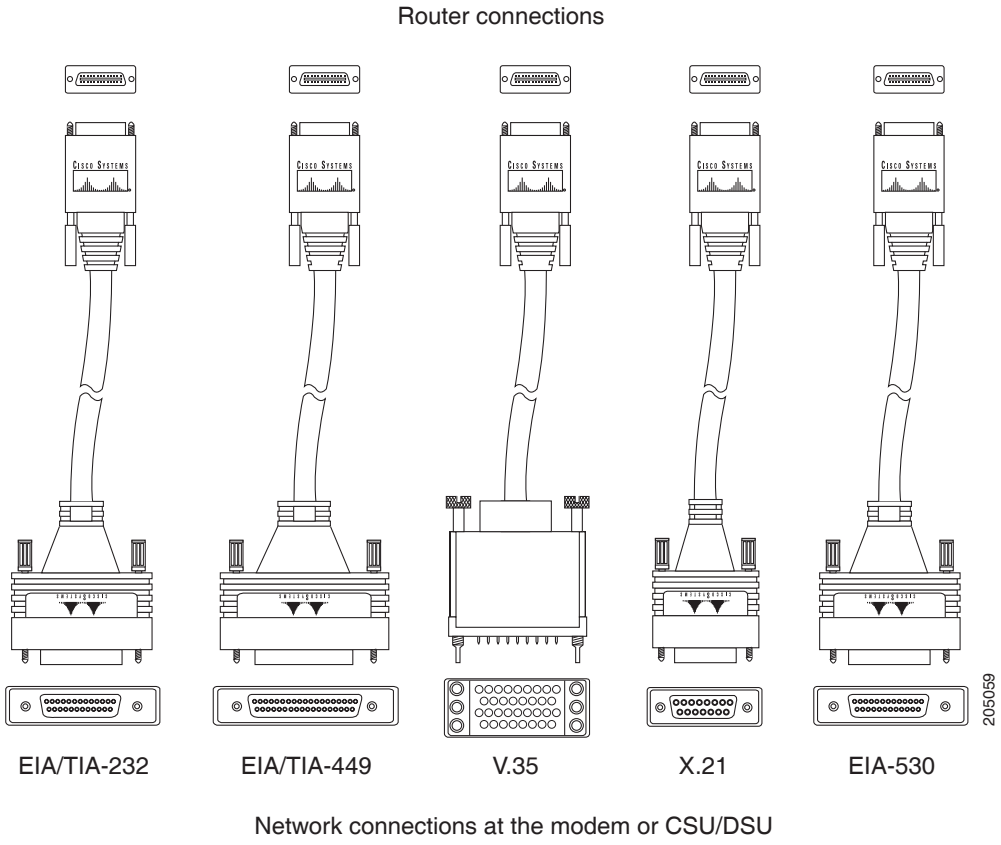

Table 3-7 lists the connector pinouts for the Smart Serial connectors that interface at the 4-Port Serial Interface SPA ports.

Table 3-7 Smart Serial Connector Pinouts

Pin	Signal	Pin	Signal
1	O_TXD/RXD+	14	O_TXD/RXD-
2	O_TXCE/RXC+	15	O_TXCE/RXC-
3	B_TXC/TXC+	16	B_TXC/TXC-
4	I_RXC/TXCE+	17	I_RXC/TXCE-
5	I_RXD/TXD+	18	I_RXD/TXD-
6	B_DCD/DCD+	19	B_DCD/DCD-
7	O_DTR/DSR+	20	O_DTR/DSR-
8	O_RTS/CTS+	21	MODE2
9	O_RTS/CTS-	22	MODE1
10	I_CTS/RTS-	23	MODE0
11	I_CTS/RTS+	24	MODEDCE

Table 3-7 Smart Serial Connector Pinouts

Pin	Signal	Pin	Signal
12	I_DSR/DTR+	25	I_DSR/DTR-
13	B_LL/LL+	26	GND

8-Port Channelized T1/E1 Serial SPA Overview

The following sections describe the 8-Port Channelized T1/E1 Serial SPA:

- 8-Port Channelized T1/E1 Serial SPA LEDs, page 3-10
- 8-Port Channelized T1/E1 Serial SPA Interface Specifications, page 3-11
- 8-Port Channelized T1/E1 Serial SPA Cables, Connectors, and Pinouts, page 3-11

8-Port Channelized T1/E1 Serial SPA LEDs

The 8-Port Channelized T1/E1 Serial SPA has three types of LEDs: two LEDs for each port on the SPA, and one STATUS LED, as shown in Figure 3-5.

Figure 3-5 8-Port Channelized T1/E1 Serial SPA Faceplate

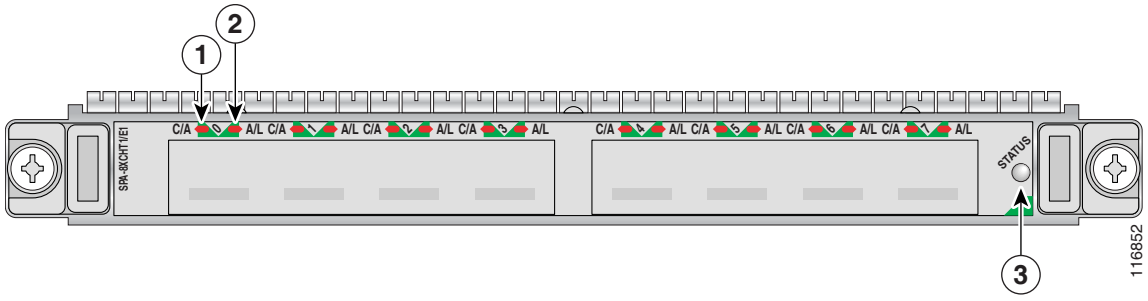

1	C/A (Carrier/Alarm) LED	3	STATUS LED
2	A/L (Active/Loopback) LED		

Table 3-8 describes the 8-Port Channelized T1/E1 Serial SPA LEDs.

Table 3-8 8-Port Channelized T1/E1 Serial SPA LEDs

LED Label	Color	State	Meaning
C/A	Off	Off	Port is not enabled by software.
	Green	On	Port is enabled by software, and there is a valid T1 or E1 signal without any alarms.
	Amber	On	Port is enabled by software, and there is at least one alarm.

Table 3-8 8-Port Channelized T1/E1 Serial SPA LEDs

LED Label	Color	State	Meaning
A/L	Off	Off	Port is not enabled by software.
	Green	On	Port is enabled by software, loopback is off.
	Amber	On	Port is enabled by software, loopback is on.
STATUS	Off	Off	SPA power is off.
	Green	On	SPA is ready and operational.
	Amber	On	SPA power is on and good, and SPA is being configured.

8-Port Channelized T1/E1 Serial SPA Interface Specifications

The E1 interface on the 8-Port Channelized T1/E1 Serial SPA uses RJ-48c receptacles for E1 (120-Ohm) cables with RJ-45 connectors. You can use all ports simultaneously. Each E1 connection supports interfaces that meet G.703 standards. The RJ-45 connection does not require an external transceiver. The E1 ports are E1 interfaces that use 120-ohm shielded twisted pair (STP) cables.

Caution Shielded T1/E1 cables must be used to comply with FCC/EN55022/CISPR22 Class A emissions requirements.

8-Port Channelized T1/E1 Serial SPA Cables, Connectors, and Pinouts

Figure 3-6 shows an RJ-45 connector.

Figure 3-6 RJ-45 Connector

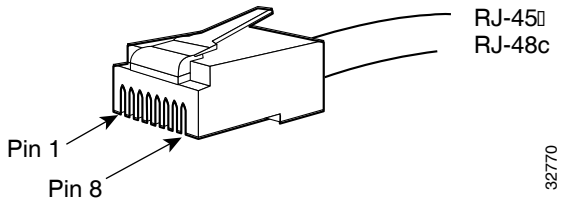

Table 3-9 describes the signals and connector pinouts for RJ-45 cable connectors.

Table 3-9 RJ-45 Connector Pinouts

Pin	Signal	Description
1	RX–	Receive ring –
2	RX+	Receive tip +
3	NC	No connection
4	TX–	Transmit ring –
5	TX+	Transmit tip +
6	NC	No connection

Table 3-9 RJ-45 Connector Pinouts (continued)

Pin	Signal	Description
7	NC	No connection
8	NC	No connection

1-Port Channelized STM-1/OC-3 SPA Overview

The following sections describe the 1-Port Channelized STM-1/OC-3 SPA:

- 1-Port Channelized STM-1/OC-3 SPA LEDs, page 3-12
- 1-Port Channelized STM-1/OC-3 SPA Interface Specifications, page 3-13
- 1-Port Channelized STM-1/OC-3 SPA Cables and Connectors, page 3-13

1-Port Channelized STM-1/OC-3 SPA LEDs

The 1-Port Channelized STM-1/OC-3 SPAhas three types of LEDs: a C\A LED, an A/L LED, and a STATUS LED, as shown in Figure 3-7.

Figure 3-7 1-Port Channelized STM-1/OC-3 SPA Faceplate

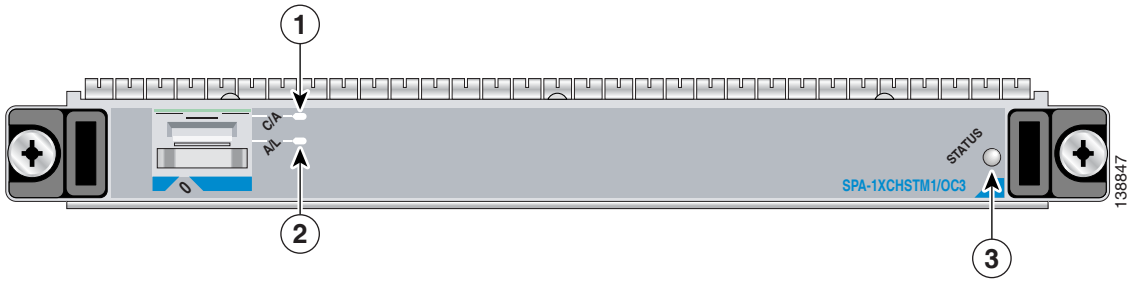

1	C/A (Carrier/Alarm) LED	3	STATUS LED
2	A/L (Active Loopback) LED		

Table 3-10 describes the 1-Port Channelized STM-1/OC-3 SPALEDs.

Table 3-10 1-Port Channelized STM-1/OC-3 SPA LEDs

LED Label	Color	State	Meaning
C/A	Off	Off	Port is not enabled by software.
	Green	On	Port is enabled by software, and there is a valid T3 signal without any alarms.
	Amber	On	Port is enabled by software, and there is at least one alarm.
A/L	Off	Off	Port is not enabled by software.
	Green	On	Port is enabled by software, and loopback is off.

Table 3-10 1-Port Channelized STM-1/OC-3 SPA LEDs (continued)

LED Label	Color	State	Meaning
	Amber	On	Port is enabled by software, and loopback is on.
STATUS	Off	Off	SPA power is off.
	Green	On	SPA is ready and operational.
	Amber	On	SPA power is on and good, and SPA is being configured.

1-Port Channelized STM-1/OC-3 SPA Interface Specifications

The framer processes incoming and outgoing SONET or SDH frames. The framer operates at OC-3c/STM-1 line rates (155.52 Mbps).

Packet data is transported with a user-configured encapsulation (such as Point-to-Point Protocol [PPP]), and is mapped into the STS-3c/STM-1 frame.

The 1-Port Channelized STM-1/OC-3 SPAinterface is compliant with RFC 1619, *PPP over SONET/SDH*, and RFC 1662, *PPP in HDLC-like Framing*. The 1-Port Channelized STM-1/OC-3 SPA also provides support for SNMP v1 agent (RFC 1155–1157), and Management Information Base (MIB) II (RFC 1213).

1-Port Channelized STM-1/OC-3 SPA Cables and Connectors

The 1-Port Channelized STM-1/OC-3 SPAuses a small form-factor pluggable (SFP) optical transceiver module installed in the port for SONET and SDH single-mode and multimode optical fiber connection (See Figure 3-8.)

Figure 3-8 SFP Optics Module

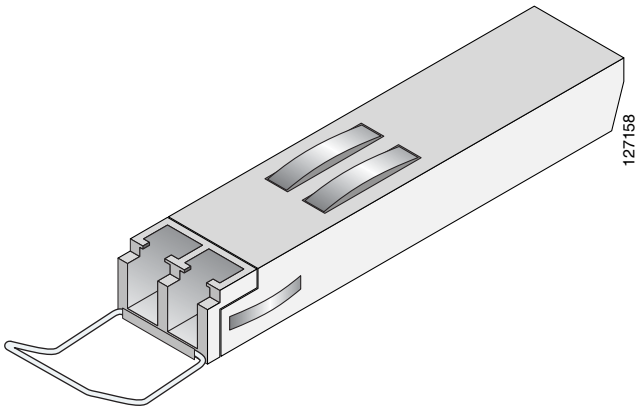

The SFP optical transceiver modules used with the 1-Port Channelized STM-1/OC-3 SPA provide the following optical fiber options:

- Multimode—155-Mbps, OC-3c/STM-1 optical fiber (SONET STS-3c or SDH STM-1)

  Use a multimode optical fiber that has a core or cladding diameter of 62.5/125 microns.
- Single-mode—155-Mbps, OC-3c/STM-1 optical fiber (SONET STS-3c or SDH STM-1)

Use a single-mode optical fiber that has a modal-field diameter of 8.7 ± 0.5 microns. (Nominal diameter is approximately 10/125 microns.)

For single-mode and multimode optical fiber connections, you can use either a duplex LC-type cable (see Figure 3-9) or two simplex LC-type cables, one for transmit (TX) and one for receive (RX).

Use single-mode (for intermediate- or long-reach configurations) or multimode optical fiber cable to connect your router to a network or to connect two 1-Port Channelized STM-1/OC-3 SPA-equipped routers back-to-back.

Long-range SFP optical transceiver modules (for long-reach configurations) cannot be connected back-to-back without using an attenuator between the two of them.

Figure 3-9 LC Type Cables

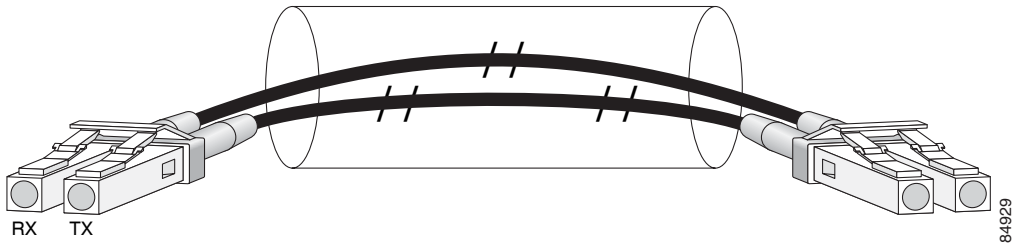

4-Port and 8-Port Fast Ethernet SPA Overview

The following sections describe the 4-Port and 8-Port Fast Ethernet SPA:

- 4-Port and 8-Port Fast Ethernet SPA LEDs, page 3-14
- 4-Port and 8-Port Fast Ethernet SPA Cables, Connectors, and Pinouts, page 3-15

4-Port and 8-Port Fast Ethernet SPA LEDs

The 4-Port and 8-Port Fast Ethernet SPA has two types of LEDs: an A/L LED for each port on the SPA, and one STATUS LED, as shown in Figure 3-10.

Figure 3-10 8-Port Fast Ethernet SPA Faceplate

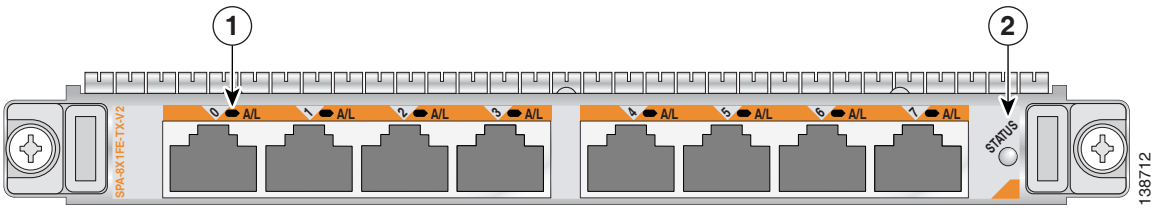

1	A/L (Active/Link) LED	2	STATUS LED

Table 3-11 describes the 4-Port and 8-Port Fast Ethernet SPA LEDs.

Table 3-11 4-Port and 8-Port Fast Ethernet SPA LEDs

LED Label	Color	State	Meaning
Port Number A/L (0, 1, 2, 3, 4, 5, 6 or 7)[1]	Off	Off	Port is not enabled.
	Green	On	Port is enabled and the link is up.
	Amber	On	Port is enabled and the link is down.
STATUS	Off	Off	SPA power is off.
	Green	On	SPA is ready and operational.
	Amber	On	SPA power is on and good, and the SPA is being configured.

1. In this case, port number refers to the numbered LEDs on the 8-Port Fast Ethernet SPA (0, 1, 2, 3, 4, 5, 6, or 7). Each LED number on the 8-Port Fast Ethernet SPA references a port on the SPA.

4-Port and 8-Port Fast Ethernet SPA Cables, Connectors, and Pinouts

The interface connectors on the 4-Port and 8-Port Fast Ethernet SPA are four or eight individual RJ-45 receptacles. You can use all interface connectors simultaneously. Each connection supports IEEE 802.3 and Ethernet 10/100BASE-T interfaces compliant with appropriate standards. Cisco does not supply Category 5 unshielded twisted pair (UTP) RJ-45 cables; these cables are available commercially.

Figure 3-11 shows the RJ-45 connector. Table 3-12 lists the pinouts and signals for the RJ-45 connector.

Figure 3-11 RJ-45 Connections, Plug, and Receptacle

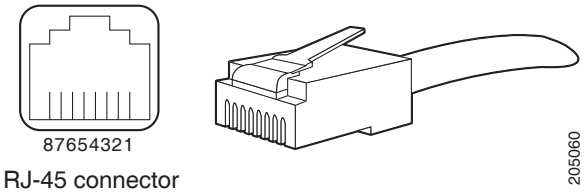

RJ-45 connector

Table 3-12 RJ-45 Connector Pinout

Pin	Description
1	Transmit data + (TxD+)
2	TxD–
3	Receive data + (RxD+)
6	RxD–

Note Referring to the RJ-45 pinout in Table 3-12, proper common-mode line terminations should be used for the unused Category 5 UTP cable pairs 4/5 and 7/8. Common-mode termination reduces the contributions to electromagnetic interference (EMI) and susceptibility to common-mode sources. Wire pairs 4/5 and 7/8 are actively terminated in the RJ-45 port circuitry in the 4-Port and 8-Port Fast Ethernet SPA.

The 4-Port and 8-Port Fast Ethernet SPA supports automatic MDI/MDIX crossover at all speeds of operation allowing the SPA to work with straight-through and crossover Ethernet cables. Depending on your RJ-45 interface cabling requirements, use the pinouts in Figure 3-12 and Figure 3-13.

Figure 3-12 Straight-Through Cable Pinout, RJ-45 Connection to a Hub or Repeater

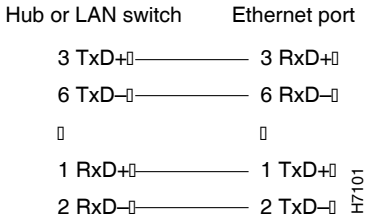

Figure 3-13 Crossover Cable Pinout, RJ-45 Connections Between Routers

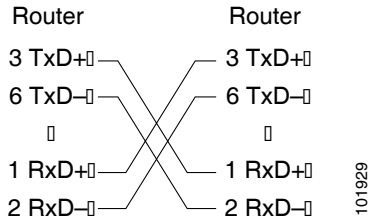

1-Port 10-Gigabit Ethernet SPA Overview

The following sections describe the 1-Port 10-Gigabit Ethernet SPA:

- 1-Port 10-Gigabit Ethernet SPA LEDs, page 3-16
- 1-Port 10-Gigabit Ethernet SPA XFP Optical Transceiver Modules, Connectors, and Cables, page 3-17

1-Port 10-Gigabit Ethernet SPA LEDs

The 1-Port 10-Gigabit Ethernet SPA has two LEDs, an ACTIVE/LINK LED for the port and a STATUS LED, as shown in Figure 3-14.

Figure 3-14 1-Port 10-Gigabit Ethernet SPA Faceplate

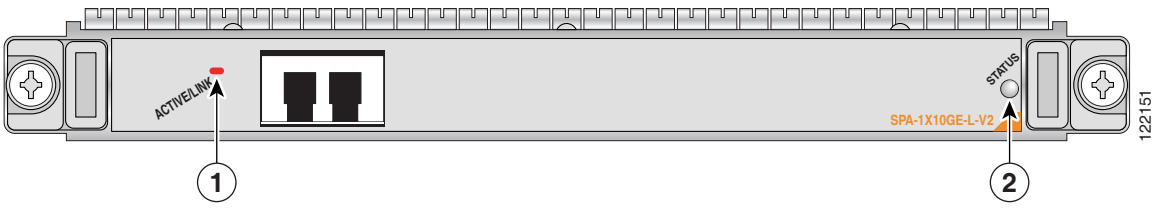

1	ACTIVE/LINK LED	2	STATUS LED

Table 3-13 describes the 1-Port 10-Gigabit Ethernet SPA LEDs.

Table 3-13 1-Port 10-Gigabit Ethernet SPA LEDs

LED Label	Color	State	Meaning
ACTIVE/LINK	Off	Off	Port is not enabled by software.
	Green	On	Port is enabled by software and the link is up.
	Amber	On	Port is enabled by software and the link is down.
STATUS	Off	Off	SPA power is off.
	Green	On	SPA is ready and operational.
	Amber	On	SPA power is on and good, and the SPA is being configured.

1-Port 10-Gigabit Ethernet SPA XFP Optical Transceiver Modules, Connectors, and Cables

The 1-Port 10-Gigabit Ethernet SPA supports the following types of optical transceiver modules:

- Single-mode short-reach (SR) XFP module—XFP-10GLR-OC192SR
- Single-mode intermediate-reach (IR) XFP module—XFP-10GER-OC192IR
- Single-mode very-long-reach (ZR) XFP module—XFP-10GZR-OC192LR

Cisco qualifies the optics that are approved for use with its SPAs. The above-listed small form-factor pluggable modules (XFPs) are the only optical transceiver modules qualified for use.

Use a single-mode optical fiber that has a modal-field diameter of 8.7 ±0.5 microns (nominal diameter is approximately 10/125 microns) to connect your router to a network.

Figure 3-15 shows the cable type for use with the XFP optical transceiver module on the 1-Port 10-Gigabit Ethernet SPA.

Figure 3-15 LC Type Cables

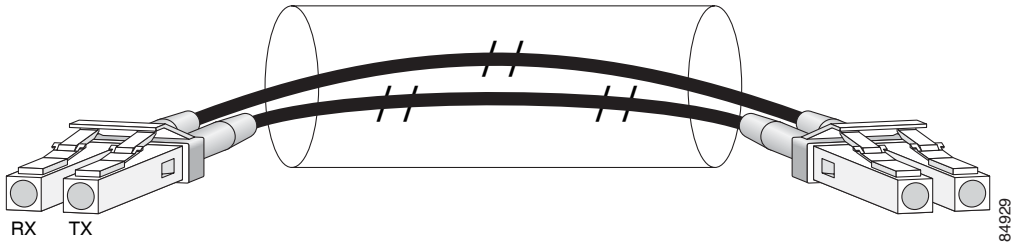

Note The 40-pin connector on the 1-Port 10-Gigabit Ethernet SPA is used for resilient packet ring (RPR) connections

XFP Connections

The XFP-10GLR-OC192SR, XFP-10GER-OC192IR, and XFP-10GZR-OC192LR modules include an optical transmitter and receiver pair integrated with Clock and Data Recovery (CDR) integrated circuits. The XFP modules provide high-speed serial links at the rate of 10.3125 Gbps (10 Gigabit Ethernet) on single-mode fiber (SMF). The transmit side recovers and retimes the 10-Gbps serial data and passes it to a laser driver. The laser driver biases and modulates a 1310-nm or 1550-nm laser, enabling data transmission over SMF through an LC connector. The receive side recovers and retimes the 10-Gbps optical data stream from a photo detector transimpedance amplifier and passes it to an output driver.

See the label on the XFP module for technology type and model. Figure 3-16 shows an XFP module and Table 3-14 shows the XFP module specifications.

Figure 3-16 XFP Module

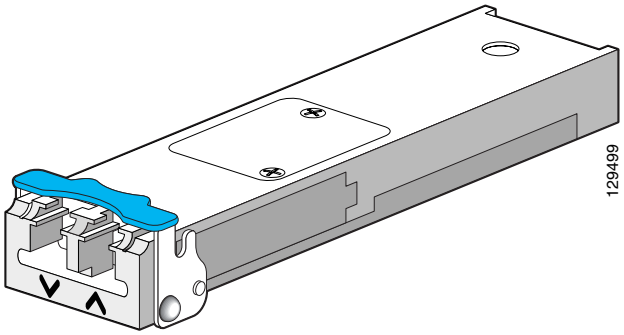

Table 3-14 XFP Module Specifications for the 1-Port 10-Gigabit Ethernet SPA

Specification	Description
Dimensions (height x width x length)	12.5 mm x 18.35 mm x 71.1 mm
Wavelength (TX)	10GLR SR-1: 1260 nm to 1355 nm 10GER IR-2: 1530 nm to 1565 nm 10GZR LR-2: 1530 nm to 1565 nm
Cabling distance (maximum)	10GLR SR-1: 6.2 miles (10 km) 10GER IR-2: 24.8 miles (40 km) 10GZR LR-2: 50 miles (80 km)
Operating case temperature range	10GLR SR-1: 23 to 158°F (–5 to 70°C) 10GER IR-2: 23 to 158°F (–5 to 70°C) 10GZR LR-2: 23 to 158°F (–5 to 70°C)
Storage temperature range	10GLR SR-1: –40 to 185°F (–40 to 85°C) 10GER IR-2: –40 to 185°F (–40 to 85°C) 10GZR LR-2: –40 to 185°F (–40 to 85°C)
TX power	10GLR SR-1: –8.2 to 0.5 dBm 10GER IR-2: –4.7 to 4 dBm 10GZR LR-2: 0 to 4 dBm
Receiver sensitivity (maximum)	10GLR SR-1: –12.6 dBm 10GER IR-2: –14.1 dBm 10GZR LR-2: –24 dBm

Table 3-14 XFP Module Specifications for the 1-Port 10-Gigabit Ethernet SPA (continued)

Specification	Description
RX overload	10GLR SR-1: 0.5 dBm 10GER IR-2: –1.0 dBm 10GZR LR-2: –7.0 dBm
Maximum receiver power damage	10GLR SR-1: 5 dBm 10GER IR-2: 5 dBm 10GZR LR-2: 5 dBm

XFP Port Cabling Specifications

Table 3-15 shows the port cabling specifications for an XFP module.

Table 3-15 XFP Port Cabling Specifications

XFP Module	Wavelength	Fiber Type
XFP-10GLR-OC192SR	1310 nm	SMF
XFP-10GER-OC192IR	1550 nm	SMF
XFP-10GZR-OC192LR	1550 nm	SMF

2-Port Gigabit Ethernet SPA Overview

The following sections describe the 2-Port Gigabit Ethernet SPA:

- 2-Port Gigabit Ethernet SPA LEDs, page 3-19
- 2-Port Gigabit Ethernet SPA Cables, Connectors, and Pinouts, page 3-20

2-Port Gigabit Ethernet SPA LEDs

The 2-Port Gigabit Ethernet SPA has two types of LEDs: an A/L LED for each port on the SPA, and one STATUS LED, as shown in Figure 3-17.

Figure 3-17 2-Port Gigabit Ethernet SPA Faceplate

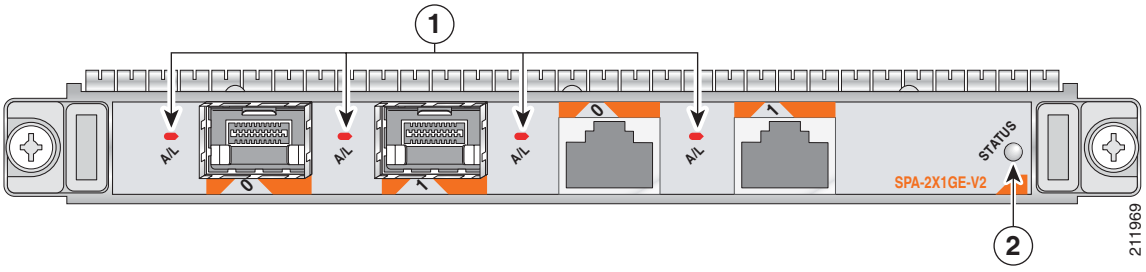

1	A/L (Active/Link) LED	2	STATUS LED

Table 3-16 describes the 2-Port Gigabit Ethernet SPA LEDs.

Table 3-16 2-Port Gigabit Ethernet SPA LEDs

LED Label	Color	State	Meaning
A/L	Off	Off	Port is not enabled.
	Green	On	Port is enabled and the link is up.
	Amber	On	Port is enabled and the link is down.
STATUS	Off	Off	SPA power is off.
	Green	On	SPA is ready and operational.
	Amber	On	SPA power is on and good, and SPA is being configured.

2-Port Gigabit Ethernet SPA Cables, Connectors, and Pinouts

The 2-Port Gigabit Ethernet SPA has two individual fiber-optic receivers that support SFP modules. Each port can send and receive traffic using the optical fiber connections.

SFP Module Connections

The small form-factor pluggable (SFP) module is an input/output (I/O) device that plugs into the Gigabit Ethernet ports on the 2-Port Gigabit Ethernet SPA, linking the port with a fiber-optic network.

Note The 2-Port Gigabit Ethernet SPA will only accept the SFP modules listed as supported in this document. An SFP module check is run every time an SFP module is inserted into the 2-Port Gigabit Ethernet SPA and only SFP modules that pass this check will be usable by the 2-Port Gigabit Ethernet SPA. SFP modules exist for technologies other than Gigabit Ethernet and for products other than the 2-Port Gigabit Ethernet SPA. However, the information in this document pertains only to SFP modules that plug into the 2-Port Gigabit Ethernet SPA ports.

See the "SFP Module and Cabling Specifications for Gigabit Ethernet SPAs" section on page 3-25 for SFP module options, module specifications, and cabling specifications.

For CWDM and DWDM SFP module specifications, see the "CWDM and DWDM SFP Modules for the Gigabit Ethernet SPAs" section on page 3-29.

Cables, Connectors, and Pinouts

In addition to the two fiber-optic receivers, the 2-Port Gigabit Ethernet SPA has two individual RJ-45 receptacles. You can use both interface connectors simultaneously. Each connection supports IEEE 802.3 and Ethernet 10/100BASE-T interfaces compliant with appropriate standards. Cisco does not supply Category 5 unshielded twisted pair (UTP) RJ-45 cables; these cables are available commercially.

Figure 3-18 shows the RJ-45 connector. Table 3-17 lists the pinouts and signals for the RJ-45 connector.

Figure 3-18 RJ-45 Connections, Plug, and Receptacle

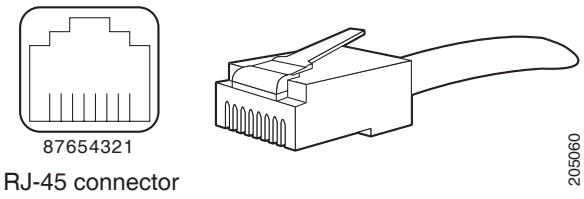

Table 3-17 RJ-45 Connector Pinout

Pin	Description
1	DA_P (bidirectional pair A, plus)
2	DA_N (bidirectional pair A, minus)
3	DB_P (bidirectional pair B, plus)
4	DC_P (bidirectional pair C, plus)
5	DC_N (bidirectional pair C, minus)
6	DB_N (bidirectional pair B, minus)
7	DD_P (bidirectional pair D, plus)
8	DD_N (bidirectional pair D, minus)

Note Referring to the RJ-45 pinout in Table 3-17, proper common-mode line terminations should be used for the unused Category 5 UTP cable pairs 4/5 and 7/8. Common-mode termination reduces the contributions to electromagnetic interference (EMI) and susceptibility to common-mode sources. Wire pairs 4/5 and 7/8 are actively terminated in the RJ-45 port circuitry in the 2-Port Gigabit Ethernet SPA.

The 2-Port Gigabit Ethernet SPA supports automatic MDI/MDIX crossover at all speeds of operation allowing the SPA to work with straight-through and crossover Ethernet cables.

5-Port Gigabit Ethernet SPA Overview

The following sections describe the 5-Port Gigabit Ethernet SPA:

- 5-Port Gigabit Ethernet SPA LEDs, page 3-21
- 5-Port Gigabit Ethernet SPA Connectors, page 3-22

5-Port Gigabit Ethernet SPA LEDs

The 5-Port Gigabit Ethernet SPA has two types of LEDs: an A/L LED for each port on the SPA, and one STATUS LED, as shown in Figure 3-19.

Figure 3-19 5-Port Gigabit Ethernet SPA Faceplate

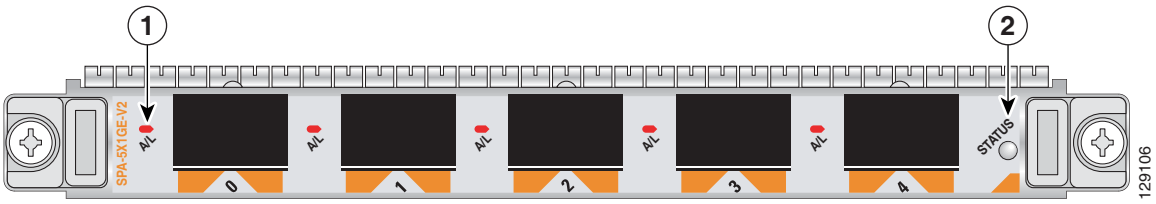

1	A/L (Active/Link) LED	2	STATUS LED

Table 3-18 describes the 5-Port Gigabit Ethernet SPA LEDs.

Table 3-18 5-Port Gigabit Ethernet SPA LEDs

LED Label	Color	State	Meaning
A/L	Off	Off	Port is not enabled.
	Green	On	Port is enabled and the link is up.
	Amber	On	Port is enabled and the link is down.
STATUS	Off	Off	SPA power is off.
	Green	On	SPA is ready and operational.
	Amber	On	SPA power is on and good, and SPA is being configured.

5-Port Gigabit Ethernet SPA Connectors

The 5-Port Gigabit Ethernet SPA has five individual fiber-optic receivers that support SFP modules. Each port can send and receive traffic using the optical fiber connections.

SFP Module Connections

The small form-factor pluggable (SFP) module is an input/output (I/O) device that plugs into the Gigabit Ethernet optical slots on the 5-Port Gigabit Ethernet SPA, linking the port with a 1000BASE-X fiber-optic network.

Note The 5-Port Gigabit Ethernet SPA will only accept the SFP modules listed as supported in this document. An SFP module check is run every time an SFP module is inserted into the 5-Port Gigabit Ethernet SPA and only SFP modules that pass this check will be usable by the 5-Port Gigabit Ethernet SPA. SFP modules exist for technologies other than Gigabit Ethernet and for products other than the 5-Port Gigabit Ethernet SPA. However, the information in this document pertains only to SFP modules that plug into the 5-Port Gigabit Ethernet SPA ports.

See the "SFP Module and Cabling Specifications for Gigabit Ethernet SPAs" section on page 3-25 for SFP module options, module specifications, and cabling specifications.

For CWDM and DWDM SFP module specifications, see the "CWDM and DWDM SFP Modules for the Gigabit Ethernet SPAs" section on page 3-29.

8-Port Gigabit Ethernet SPA Overview

The following sections describe the 8-port Gigabit Ethernet SPA:

- 8-Port Gigabit Ethernet SPA LEDs, page 3-23
- 8-Port Gigabit Ethernet SPA Connectors, page 3-23

8-Port Gigabit Ethernet SPA LEDs

The 8-Port Gigabit Ethernet SPA has two types of LEDs: an A/L LED for each port on the SPA, and one STATUS LED, as shown in Figure 3-20.

Figure 3-20 8-Port Gigabit Ethernet SPA Faceplate

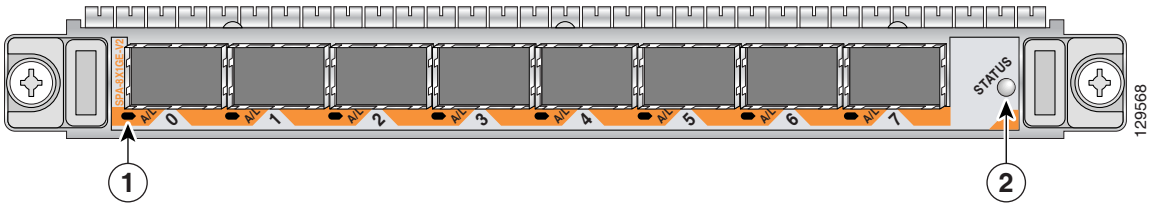

1	A/L (Active/Link) LED	2	STATUS LED

Table 3-19 describes the 8-Port Gigabit Ethernet SPA LEDs.

Table 3-19 8-Port Gigabit Ethernet SPA LEDs

LED Label	Color	State	Meaning
A/L	Off	Off	Port is not enabled.
	Green	On	Port is enabled and the link is up.
	Amber	On	Port is enabled and the link is down.
STATUS	Off	Off	SPA power is off.
	Green	On	SPA is ready and operational.
	Amber	On	SPA power is on and good, and the SPA is being configured.

8-Port Gigabit Ethernet SPA Connectors

The 8-Port Gigabit Ethernet SPA has eight individual fiber-optic receivers that support SFP modules. Each port can send and receive traffic using the optical fiber connections.

SFP Module Connections

The small form-factor pluggable (SFP) module is an input/output (I/O) device that plugs into the Gigabit Ethernet ports on the 8-Port Gigabit Ethernet SPA, linking the port with a fiber-optic network.

Note The 8-Port Gigabit Ethernet SPA will only accept the SFP modules listed as supported in this document. An SFP module check is run every time an SFP module is inserted into the 8-Port Gigabit Ethernet SPA and only SFP modules that pass this check will be usable by the 8-Port Gigabit Ethernet SPA. SFP modules exist for technologies other than Gigabit Ethernet and for products other than the 8-Port Gigabit Ethernet SPA. However, the information in this document pertains only to SFP modules that plug into the 8-Port Gigabit Ethernet SPA ports.

See the "SFP Module and Cabling Specifications for Gigabit Ethernet SPAs" section on page 3-25 for SFP module options, module specifications, and cabling specifications.

For CWDM and DWDM SFP module specifications, see the "CWDM and DWDM SFP Modules for the Gigabit Ethernet SPAs" section on page 3-29.

10-Port Gigabit Ethernet SPA Overview

The following sections describe the 10-Port Gigabit Ethernet SPA:

- 10-Port Gigabit Ethernet SPA LEDs, page 3-24
- 10-Port Gigabit Ethernet SPA Connectors, page 3-25
- SFP Module and Cabling Specifications for Gigabit Ethernet SPAs, page 3-25
- CWDM and DWDM SFP Modules for the Gigabit Ethernet SPAs, page 3-29

10-Port Gigabit Ethernet SPA LEDs

The 10-Port Gigabit Ethernet SPA has two types of LEDs: an A/L LED for each port on the SPA, and one STATUS LED, as shown in Figure 3-21.

Figure 3-21 10-Port Gigabit Ethernet SPA Faceplate

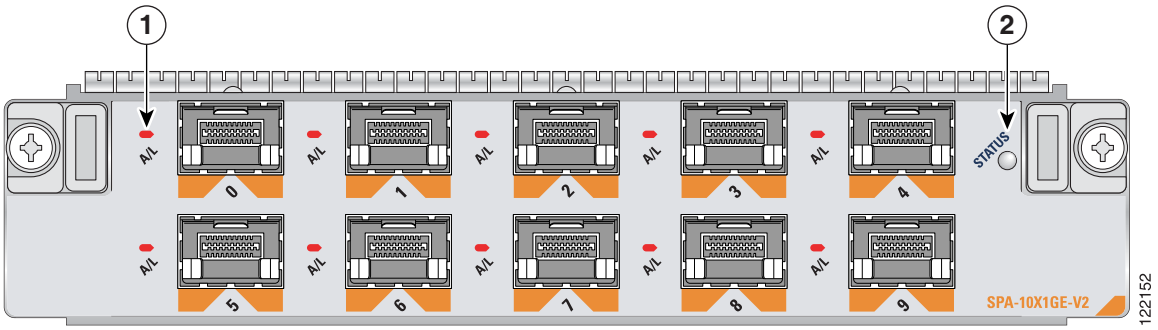

1	A/L (Active/Link) LED	2	STATUS LED

Table 3-20 describes the 10-Port Gigabit Ethernet SPA LEDs.

Table 3-20 10-Port Gigabit Ethernet SPA LEDs

LED Label	Color	State	Meaning
A/L	Off	Off	Port is not enabled.
	Green	On	Port is enabled and the link is up.
	Amber	On	Port is enabled and the link is down.
STATUS	Off	Off	SPA power is off.
	Green	On	SPA is ready and operational.
	Amber	On	SPA power is on and good, and the SPA is being configured.

10-Port Gigabit Ethernet SPA Connectors

The 10-Port Gigabit Ethernet SPA has ten electrical connectors that support SFP modules. Each port can send and receive traffic using cabling appropriate for the SFP module inserted.

SFP Module Connections

The small form-factor pluggable (SFP) module is an input/output (I/O) device that plugs into the Gigabit Ethernet optical slots on the 10-Port Gigabit Ethernet SPA, linking the port with a 1000BASE-X fiber-optic network.

Note The 10-Port Gigabit Ethernet SPA will only accept the SFP modules listed as supported in this document. An SFP module check is run every time an SFP is inserted into the 10-Port Gigabit Ethernet SPA and only SFP modules that pass this check will be usable by the 10-Port Gigabit Ethernet SPA. SFP modules exist for technologies other than Gigabit Ethernet and for products other than the 10-Port Gigabit Ethernet SPA. However, the information in this document pertains only to SFP modules that plug into the 10-Port Gigabit Ethernet SPA ports.

See the "SFP Module and Cabling Specifications for Gigabit Ethernet SPAs" section on page 3-25 for SFP module options, module specifications, and cabling specifications.

For CWDM and DWDM SFP module specifications, see the "CWDM and DWDM SFP Modules for the Gigabit Ethernet SPAs" section on page 3-29.

SFP Module and Cabling Specifications for Gigabit Ethernet SPAs

The following sections describe SFP module specifications and cabling information for the Gigabit Ethernet SPAs:

- SFP Module Specifications, page 3-26
- SFP Module Cabling and Connection Equipment, page 3-28

SFP Module Specifications

The SFP module has a receiver port (RX) and a transmitter port (TX) that compose one optical interface. Table 3-21, Table 3-22, Table 3-23, Table 3-24, and Table 3-25 provide SFP module information and specifications.

Table 3-21 SFP Module Options for Gigabit Ethernet SPAs Using SFP Modules

SFP Module Product Number	SFP Module	Description
SFP-GE-S	Short wavelength (1000BASE-SX)	Contains a Class 1 laser of 850 nm for 1000BASE-SX (short-wavelength) applications.
SFP-GE-L	Long wavelength/long haul (1000BASE-LX/LH)	Contains a Class 1 laser of 1310 nm for 1000BASE-LX/LH (long-wavelength) applications.
SFP-GE-Z	Extended wavelength (1000BASE-ZX)	Contains a Class 1 laser of 1550 nm for 1000BASE-ZX (extended-wavelength) applications.
SFP-GE-T	Cisco 1000BASET SFP	The 1000BASE-T SFP module operates on standard Category 5 wiring of up to 328 feet (100 m) link length.
GLC-FE-100FX	Cisco 1000BASE-FX SFP	The 1000BASE-FX SFP module operates operates on ordinary multimode fiber-optic (MMF) link spans up to 6562 feet (2 kilometers) long.

Table 3-22 SFP Module Specifications

Specification	Description
Wavelength	SFP-GE-S: 770 to 860 nm SFP-GE-L: 1270 to 1355 nm SFP-GE-Z: 1500 to 1580 nm SFP-GE-T: N/A GLC-FE-100FX: 1270 to 1380 nm
Cabling distance (maximum)	SFP-GE-S: 1640 feet (500 m) on 50/125um MMF; 984 feet (300 m) on 62.5/125um MMF SFP-GE-L: 6.2 miles (10 km) SFP-GE-Z: 49.7 miles (80 km) SFP-GE-T: 328 feet (100 m) GLC-FE-100FX: 6562 feet (2 kilometers)
Operating case temperature range	SFP-GE-S: 23 to 185°F (–5 to 85°C) SFP-GE-L: 23 to 185°F (–5 to 85°C) SFP-GE-Z: 23 to 185°F (–5 to 85°C) SFP-GE-T: 23 to 185°F (–5 to 85°C) GLC-FE-100FX: 23 to 185°F (–5 to 85°C)

Table 3-22 SFP Module Specifications

Specification	Description
Storage temperature range	SFP-GE-S: –40 to 185°F (–40 to 85°C) SFP-GE-L: –40 to 185°F (–40 to 85°C) SFP-GE-Z: –40 to 185°F (–40 to 85°C) SFP-GE-T: –40 to 185°F (–40 to 85°C) GLC-FE-100FX: –40 to 185°F (–40 to 85°C)
Supply voltage range	SFP-GE-S: 3.1 to 3.5 V SFP-GE-L: 3.1 to 3.5 V SFP-GE-Z: 3.1 to 3.5 V SFP-GE-T: 3.1 to 3.5 V GLC-FE-100FX: 3.1 to 3.5 V

SFP-GE-S Modules

The 1000BASE-SX (short-wavelength) module operates on standard multimode fiber-optic link spans of up to 1640 feet (500 m) on 50/125um multimode fiber (MMF) and 984 feet (300 m) on 62.5/125um MMF.

SFP-GE-L Modules

The 1000BASE-LX/LH (long-wavelength/long-haul) module interfaces fully comply with the IEEE 802.3z 1000BASE-LX standard. However, their higher optical quality allows them to reach 6.2 miles (10 km) over single-mode fiber (SMF) versus the 3.1 miles (5 km) specified in the standard.

SFP-GE-Z Modules

The 1000BASE-ZX (extended-wavelength) module operates on ordinary single-mode fiber-optic link spans of up to 49.7 miles (80 km). Link spans of up to 62.1 miles (100 km) are possible using premium single-mode fiber or dispersion-shifted single-mode fiber. (Premium single-mode fiber has a lower attenuation per unit length than ordinary single-mode fiber; dispersion-shifted single-mode fiber has both lower attenuation and less dispersion.)

The 1000BASE-ZX module must be coupled to single-mode fiber-optic cable, which is the type of cable typically used in long-haul telecommunications applications. The 1000BASE-ZX module does not operate correctly when coupled to multimode fiber, and it is not intended to be used in environments in which multimode fiber is frequently used (for example, building backbones or horizontal cabling).

The 1000BASE-ZX module is intended to be used as a Physical Medium Dependent (PMD) component for Gigabit Ethernet interfaces found on various switch and router products. It operates at a signaling rate of 1250 Mbaud, transmitting and receiving 8B/10B encoded data.

When shorter lengths of single-mode fiber are used, it may be necessary to insert an inline optical attenuator in the link to avoid overloading the receiver. Use the following guidelines:

- Insert a 10-dB inline optical attenuator between the fiber-optic cable plant and the receiving port on the 1000BASE-ZX module at each end of the link whenever the fiber-optic cable span is less than 15.5 miles (25 km).
- Insert a 5-dB inline optical attenuator between the fiber-optic cable plant and the receiving port on the 1000BASE-ZX module at each end of the link whenever the fiber-optic cable span is equal to or greater than 15.5 miles (25 km) but less than 31 miles (50 km).

SFP-GE-T Modules

The 1000BASE-T SFP module (SFP-GE-T) is compliant with IEEE 802.3:2000 and plugs into a standard Gigabit Ethernet SFP module port. It operates on standard Category 5 wiring and has an RJ-45 connector.

The SFP-GE-T is hot swappable. The SFP-GE-T module supports 10/100/1000 speeds. The half- and full-duplex modes are supported in the 10/100 speed configuration. Also, auto-negotiation is supported. The SFP-GE-T maximum cabling distance is 328 feet (100 m).

SFP Module Cabling and Connection Equipment

Table 3-23 provides cabling specifications for the SFP modules that can be installed on the Gigabit Ethernet SPAs. Note that all SFP ports have LC-type connectors.

The minimum cable distance for the SFP-GE-S is 6.5 feet (2 m), and the minimum link distance for the SFP-GE-Z is 6.2 miles (10 km) with an 8-dB attenuator installed at each end of the link. Without attenuators, the minimum link distance for the SFP-GE-Z is 24.9 miles (40 km).

Table 3-23 SFP Module Port Cabling Specifications

SFP Modules	Wavelength (nm)	Fiber Type	Core Size (micron)	Modal Bandwidth (MHz/km)	Maximum Cable Distance
SFP-GE-S	850	MMF[1]	62.5	160	722 ft (220 m)
			62.5	200	984 ft (300 m)
			50.0	400	1640 ft (500 m)
			50.0	500	1804 ft (550 m)
SFP-GE-L	1300	MMF[2] and SMF	62.5	500	1804 ft (550 m)
			50.0	400	1804 ft (550 m)
			50.0	500	1804 ft (550 m)
			9/10	—	6.2 miles (10 km)
SFP-GE-Z	1550	SMF	9/10	—	49.7 miles (80 km)
		SMF[3]	8	—	62.1 miles (100 km)
SFP-GE-T	N/A	Copper	N/A	N/A	328 ft (100 m)
GLC-FE-100FX	1310	MMF	N/A	N/A	6562 ft (2 kilometers)

1. Multimode fiber (MMF) only.
2. A mode-conditioning patch cord is required. When using the SFP-GE-L with 62.5-micron diameter MMF, you must install a mode-conditioning patch cord between the SFP module and the MMF cable on both the transmit end and the receive end of the link when link distances are greater than 984 ft (300 m).
3. Dispersion-shifted single-mode fiber-optic cable.

Note The 1000BASE-ZX SFP modules provide an optical power budget of 21.5 dB. You should measure your cable plant with an optical loss test set to verify that the optical loss of the cable plant (including connectors and splices) is less than or equal to 21.5 dB. The optical loss measurement must be performed with a 1550-nm light source.

CWDM and DWDM SFP Modules for the Gigabit Ethernet SPAs

Specifications for the course wave division multiplexer (CWDM) and dense wave division multiplexer (DWDM) SFP modules are given in the following sections:

- CWDM SFP Module Specifications for All Gigabit Ethernet SPAs Using SFP Modules, page 3-29
- DWDM SFP Module Specifications, page 3-29

CWDM SFP Module Specifications for All Gigabit Ethernet SPAs Using SFP Modules

Table 3-24 provides CWDM SFP module specifications for all Gigabit Ethernet SPAs using SFP modules (but not those Gigabit Ethernet SPAs using XFP modules).

Table 3-24 CWDM SFP Module Specifications

CWDM Product Number	CWDM Module	Color
CWDM-SFP-1470	Cisco CWDM 1470-nm SFP module; Gigabit Ethernet and 1- and 2-Gb Fibre Channel	Gray
CWDM-SFP-1490	Cisco CWDM 1490-nm SFP module; Gigabit Ethernet and 1- and 2-Gb Fibre Channel	Violet
CWDM-SFP-1510	Cisco CWDM 1510-nm SFP module; Gigabit Ethernet and 1- and 2-Gb Fibre Channel	Blue
CWDM-SFP-1530	Cisco CWDM 1530-nm SFP module; Gigabit Ethernet and 1- and 2-Gb Fibre Channel	Green
CWDM-SFP-1550	Cisco CWDM 1550-nm SFP module; Gigabit Ethernet and 1- and 2-Gb Fibre Channel	Yellow
CWDM-SFP-1570	Cisco CWDM 1570-nm SFP module; Gigabit Ethernet and 1- and 2-Gb Fibre Channel	Orange
CWDM-SFP-1590	Cisco CWDM 1590-nm SFP module; Gigabit Ethernet and 1- and 2-Gb Fibre Channel	Red
CWDM-SFP-1610	Cisco CWDM 1610-nm SFP module; Gigabit Ethernet and 1- and 2-Gb Fibre Channel	Brown

DWDM SFP Module Specifications

Table 3-25 provides DWDM SFP module specifications.

Note The DWDM SFP modules are only supported on the following SPAs:

- 2-Port Gigabit Ethernet SPA

- 5-Port Gigabit Ethernet SPA
- 8-Port Gigabit Ethernet SPA
- 10-Port Gigabit Ethernet SPA

Table 3-25 DWDM SFP Module Specifications

DWDM Product Number	DWDM Module	ITU Channel
DWDM-SFP-6061=	1000BASE-DWDM 1560.61 nm SFP module (100-GHz ITU grid)	21
DWDM-SFP-5979=	1000BASE-DWDM 1559.79 nm SFP module (100-GHz ITU grid)	22
DWDM-SFP-5898=	1000BASE-DWDM 1558.98 nm SFP module (100-GHz ITU grid)	23
DWDM-SFP-5817=	1000BASE-DWDM 1558.17 nm SFP module (100-GHz ITU grid)	24
DWDM-SFP-5655=	1000BASE-DWDM 1556.55 nm SFP module (100-GHz ITU grid)	26
DWDM-SFP-5575=	1000BASE-DWDM 1555.75 nm SFP module (100-GHz ITU grid)	27
DWDM-SFP-5494=	1000BASE-DWDM 1554.94 nm SFP module (100-GHz ITU grid)	28
DWDM-SFP-5413=	1000BASE-DWDM 1554.13 nm SFP module (100-GHz ITU grid)	29
DWDM-SFP-5252=	1000BASE-DWDM 1552.52 nm SFP module (100-GHz ITU grid)	31
DWDM-SFP-5172=	1000BASE-DWDM 1551.72 nm SFP module (100-GHz ITU grid)	32
DWDM-SFP-5092=	1000BASE-DWDM 1550.92 nm SFP module (100-GHz ITU grid)	33
DWDM-SFP-5012=	1000BASE-DWDM 1550.12 nm SFP module (100-GHz ITU grid)	34
DWDM-SFP-4851=	1000BASE-DWDM 1548.51 nm SFP module (100-GHz ITU grid)	36
DWDM-SFP-4772=	1000BASE-DWDM 1547.72 nm SFP module (100-GHz ITU grid)	37
DWDM-SFP-4692=	1000BASE-DWDM 1546.92 nm SFP module (100-GHz ITU grid)	38
DWDM-SFP-4612=	1000BASE-DWDM 1546.12 nm SFP module (100-GHz ITU grid)	39
DWDM-SFP-4453=	1000BASE-DWDM 1544.53 nm SFP module (100-GHz ITU grid)	41
DWDM-SFP-4373=	1000BASE-DWDM 1543.73 nm SFP module (100-GHz ITU grid)	42
DWDM-SFP-4294=	1000BASE-DWDM 1542.94 nm SFP module (100-GHz ITU grid)	43
DWDM-SFP-4214=	1000BASE-DWDM 1542.14 nm SFP module (100-GHz ITU grid)	44
DWDM-SFP-4056=	1000BASE-DWDM 1540.56 nm SFP module (100-GHz ITU grid)	46
DWDM-SFP-3977=	1000BASE-DWDM 1539.77 nm SFP module (100-GHz ITU grid)	47
DWDM-SFP-3898=	1000BASE-DWDM 1538.98 nm SFP module (100-GHz ITU grid)	48
DWDM-SFP-3819=	1000BASE-DWDM 1538.19 nm SFP module (100-GHz ITU grid)	49
DWDM-SFP-3661=	1000BASE-DWDM 1536.61 nm SFP module (100-GHz ITU grid)	51
DWDM-SFP-3582=	1000BASE-DWDM 1535.82 nm SFP module (100-GHz ITU grid)	52
DWDM-SFP-3504=	1000BASE-DWDM 1535.04 nm SFP module (100-GHz ITU grid)	53
DWDM-SFP-3425=	1000BASE-DWDM 1534.25 nm SFP module (100-GHz ITU grid)	54
DWDM-SFP-3268=	1000BASE-DWDM 1532.68 nm SFP module (100-GHz ITU grid)	56
DWDM-SFP-3190=	1000BASE-DWDM 1531.90 nm SFP module (100-GHz ITU grid)	57
DWDM-SFP-3112=	1000BASE-DWDM 1531.12 nm SFP module (100-GHz ITU grid)	58
DWDM-SFP-3033=	1000BASE-DWDM 1530.33 nm SFP module (100-GHz ITU grid)	59

2-Port and 4-Port OC-3c/STM-1 POS SPA Overview

The 2-Port and 4-Port OC-3c/STM-1 POS SPA is a single-height SPA that installs into one SIP subslot. The 2-Port and 4-Port OC-3c/STM-1 POS SPA with small form-factor pluggable (SFP) optical transceiver modules provides SONET and SDH network connectivity with a per-port bandwidth of 155.52 Mbps. The 2-Port and 4-Port OC-3c/STM-1 POS SPA operates at quarter rate.

Note When SFP modules are replaced, the SPA interface retains any previously defined configurations. These configurations include settings for IP address, clock source, loopback, CRC, and POS flags.

For more information about SPAs and their compatibility with SIPs and modular optics, see the "SIP and SPA Compatibility" section on page 1-2.

The following sections describe the 2-Port and 4-Port OC-3c/STM-1 POS SPA:

- 2-Port and 4-Port OC-3c/STM-1 POS SPA LEDs, page 3-31
- 2-Port and 4-Port OC-3c/STM-1 POS SPA Interface Specifications, page 3-32
- 2-Port and 4-Port OC-3c/STM-1 POS SPA Optical Transceiver Modules and Cables, page 3-32

2-Port and 4-Port OC-3c/STM-1 POS SPA LEDs

The 2-Port and 4-Port OC-3c/STM-1 POS SPA has three types of LEDs: two LEDs for each port on the SPA, and one STATUS LED, as shown in Figure 3-22.

Figure 3-22 4-Port OC-3c/STM-1 POS SPA Faceplate

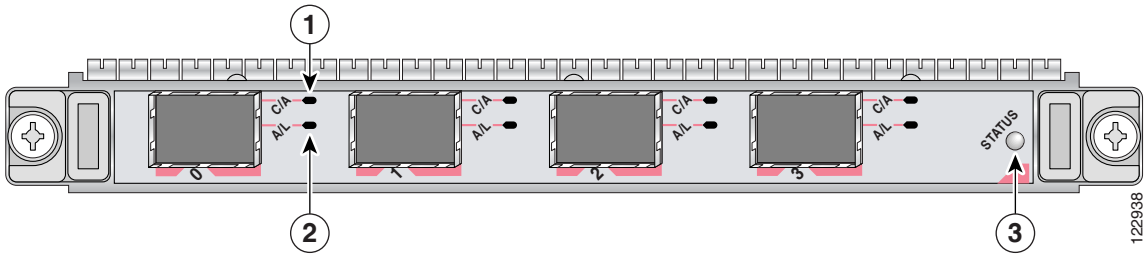

1	C/A (Carrier/Alarm) LED	3	STATUS LED
2	A/L (Active/Loopback) LED		

Table 3-26 describes the 2-Port and 4-Port OC-3c/STM-1 POS SPA LEDs.

Table 3-26 2-Port and 4-Port OC-3c/STM-1 POS SPA LEDs

LED Label	Color	State	Meaning
C/A	Off	Off	SONET controller is shut down.
	Green	On	Port is enabled by software, and there is a valid SONET signal without any alarms.
	Amber	On	Port is enabled by software, and there is at least one alarm.

Table 3-26 2-Port and 4-Port OC-3c/STM-1 POS SPA LEDs (continued)

LED Label	Color	State	Meaning
A/L	Off	Off	Interface is shut down.
	Green	On	Port is enabled by software, and loopback is off.
	Amber	On	Port is enabled by software, and loopback is on.
STATUS	Off	Off	SPA power is off.
	Green	On	SPA is ready and operational.
	Amber	On	SPA power is on and good, and the SPA is being configured.

2-Port and 4-Port OC-3c/STM-1 POS SPA Interface Specifications

The framer processes incoming and outgoing SONET or SDH frames. The framer operates at OC-3c/STM-1 line rates (155.52 Mbps).

Packet data is transported with a user-configured encapsulation (such as Point-to-Point Protocol [PPP]) and is mapped into the STS-3c/STM-1 frame.

The 2-Port and 4-Port OC-3c/STM-1 POS SPA interface complies with the following RFCs:

- RFC 1662, *PPP in HDLC-like Framing*
- RFC 2427, *Multiprotocol Interconnect over Frame Relay*
- RFC 2615, *PPP over SONET/SDH*

2-Port and 4-Port OC-3c/STM-1 POS SPA Optical Transceiver Modules and Cables

The 2-Port and 4-Port OC-3c/STM-1 POS SPA uses a small form-factor pluggable (SFP) optical transceiver module installed in each port for SONET and SDH single-mode and multimode optical fiber connection (see Figure 3-23).

Cisco qualifies the optics that are approved for use with its SPAs. The 2-Port and 4-Port OC-3c/STM-1 POS SPA supports the following types of optical transceiver modules:

- Multimode (MM) SFP module—SFP-OC3-MM
- Short-reach (SR) SFP module—SFP-OC3-SR
- Intermediate-reach (IR) SFP module (15 km)—SFP-OC3-IR1
- Long-reach (LR) SFP module (40 km)—SFP-OC3-LR1
- Long-reach (LR) SFP module (80 km)—SFP-OC3-LR2

Figure 3-23 SFP Optics Module

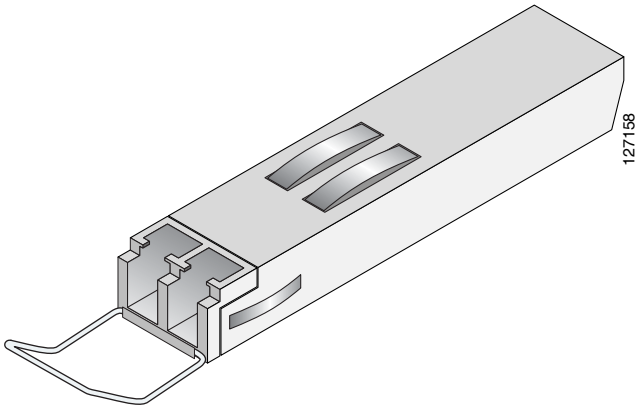

The SFP optical transceiver modules used with the 2-Port and 4-Port OC-3c/STM-1 POS SPA provide the following optical fiber options:

- Multimode—155-Mbps, OC-3c/STM-1 optical fiber (SONET STS-3c or SDH STM-1)

  Use a multimode optical fiber that has a core/cladding diameter of 62.5/125 microns.

- Single-mode—155-Mbps, OC-3c/STM-1 optical fiber (SONET STS-3c or SDH STM-1)

  Use a single-mode optical fiber that has a modal-field diameter of 8.7 ± 0.5 microns. (Nominal diameter is approximately 10/125 microns.)

For single-mode and multimode optical fiber connections, you can use either a duplex LC-type cable (see Figure 3-24) or two simplex LC-type cables, one for transmit (TX) and one for receive (RX).

Use single-mode (for intermediate- or long-reach configurations) or multimode optical fiber cable to connect your router to a network or to connect two 2-Port and 4-Port OC-3c/STM-1 POS SPA-equipped routers back-to-back.

Long-range SFP optical transceiver modules (for long-reach configurations) cannot be connected back-to-back without using an attenuator between them.

Figure 3-24 LC Type Cables

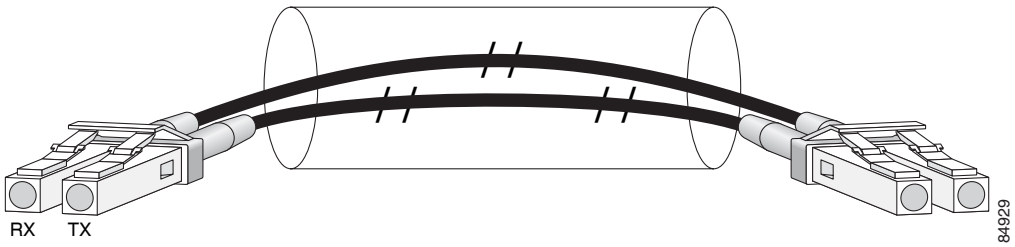

OC-3 Module Connections

Table 3-27 shows the OC-3 specifications of the optics on the 2-Port and 4-Port OC-3c/STM-1 POS SPA.

Table 3-27 OC-3 Specifications

Specification	Description
Wavelength	OC-3 MM: 1270 nm to 1380 nm OC-3 SR: 1260 nm to 1360 nm OC-3 IR-1: 1261 nm to 1360 nm OC-3 LR-1: 1263 nm to 1360 nm OC-3 LR-2: 1480 nm to 1580 nm
Cabling distance (maximum)	OC-3 MM: 2 km (1.2 miles) OC-3 SR: 2 km (1.2 miles) OC-3 IR-1: 15 km (9.3 miles) OC-3 LR-1: 40 km (24.8 miles) OC-3 LR-2: 80 km (49.7 miles)
Operating case temperature range	OC-3 MM: 23 to 185°F (–5 to 85°C) OC-3 SR: 23 to 185°F (–5 to 85°C) OC-3 IR-1: 23 to 185°F (–5 to 85°C) OC-3 LR-1: 23 to 185°F (–5 to 85°C) OC-3 LR-2: 23 to 185°F (–5 to 85°C)
TX power	OC-3 MM: –19 to –14 dBm OC-3 SR: –15 to –8 dBm OC-3 IR-1: –15 to –8 dBm OC-3 LR-1: –5 to 0 dBm OC-3 LR-2: –5 to 0 dBm
Receiver sensitivity (maximum)	OC-3 MM: –30 dBm OC-3 SR: –23 dBm OC-3 IR-1: –28 dBm OC-3 LR-1: –34 dBm OC-3 LR-2: –34 dBm
RX overload	OC-3 MM: –5 dBm OC-3 SR: –8 dBm OC-3 IR-1: –8 dBm OC-3 LR-1: –10 dBm OC-3 LR-2: –10 dBm
Maximum receiver power damage	OC-3 MM: 5 dBm OC-3 SR: 5 dBm OC-3 IR-1: 5 dBm OC-3 LR-1: 5 dBm OC-3 LR-2: 5 dBm

2-Port and 4-Port OC-48c/STM-16 POS/RPR SPA Overview

The following sections describe the 2-Port and 4-Port OC-48c/STM-16 POS/RPR SPA:

- 2-Port and 4-Port OC-48c/STM-16 POS/RPR SPA LEDs, page 3-35
- 2-Port and 4-Port OC-48c/STM-16 POS/RPR SPA Interface Specifications, page 3-36
- 2-Port and 4-Port OC-48c/STM-16 POS/RPR SPA Cables, Optical Transceiver Modules, and Connectors, page 3-36

2-Port and 4-Port OC-48c/STM-16 POS/RPR SPA LEDs

The 2-Port and 4-Port OC-48c/STM-16 POS/RPR SPA has five types of LEDs: four LEDs for each port on the SPA, and one STATUS LED, as shown in Figure 3-25.

Figure 3-25 2-Port OC-48c/STM-16 POS/RPR SPA Faceplate

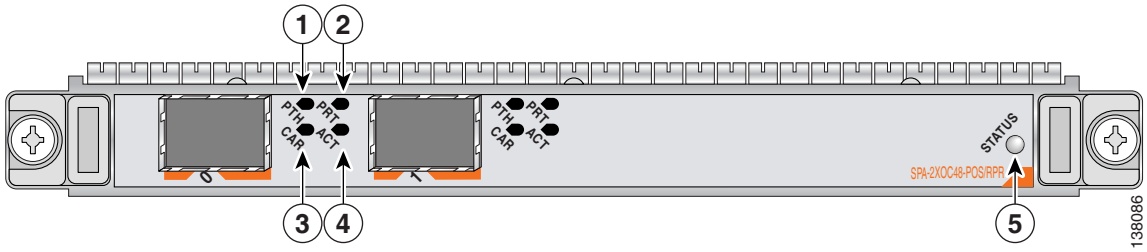

1	PTH (Pass Through) LED	4	ACT (Active Loopback) LED
2	PRT (Protect) LED	5	STATUS LED
3	CAR (Carrier Alarm) LED		

Table 3-28 describes the 2-Port and 4-Port OC-48c/STM-16 POS/RPR SPA LEDs.

Table 3-28 2-Port and 4-Port OC-48c/STM-16 POS/RPR SPA LEDs

LED Label	Color	State	Meaning
PTH	Off	Off	Port is not in pass-through mode.
	Amber	On	Port is in pass-through mode.
CAR	Off	Off	Port is not enabled by software.
	Green	On	Port is enabled by software, and there is a valid SONET signal without any alarms.
	Amber	On	Port is enabled by software, and there is at least one alarm.
	Amber	Flashing	Port is enabled by software, and there is a side mismatch.

Table 3-28 2-Port and 4-Port OC-48c/STM-16 POS/RPR SPA LEDs (continued)

LED Label	Color	State	Meaning
PRT	Off	Off	Port is not wrapped or steering.
	Green	On	A node on the ring is wrapped.
	Green	Flashing	A node on the ring is steering.
	Amber	On	Port is locally wrapped.
	Amber	Flashing	Port is locally steering.
ACT	Off	Off	Port is not enabled by software.
	Green	On	Port is enabled by software, and loopback is off.
	Amber	On	Port is enabled by software, and loopback is on.
STATUS	Off	Off	SPA power is off.
	Green	On	SPA is ready and operational.
	Amber	On	SPA power is on and good, and the SPA is being configured.

2-Port and 4-Port OC-48c/STM-16 POS/RPR SPA Interface Specifications

The physical layer interface for the 2-Port and 4-Port OC-48c/STM-16 POS/RPR SPA is Optical Carrier-48 (OC-48), and provides SONET and SDH network connectivity with a per-port bandwidth of 2.488 Gbps.

2-Port and 4-Port OC-48c/STM-16 POS/RPR SPA Cables, Optical Transceiver Modules, and Connectors

Use single-mode (for intermediate-reach configurations) optical fiber cable to connect your router to a network or to connect two routers back-to-back.

The 2-Port and 4-Port OC-48c/STM-16 POS/RPR SPA supports the following types of optical transceiver modules:

- Single-mode short-reach (SR) SFP module—SFP-OC48-SR
- Single-mode intermediate-reach (IR) SFP module—SFP-OC48-IR1
- Single-mode long-reach (LR) SFP module—SFP-OC48-LR2

Each port on the 2-Port and 4-Port OC-48c/STM-16 POS/RPR SPA has one duplex LC-type receptacle. For single-mode optical fiber connections, you can use either a duplex LC-type cable (see Figure 3-26) or two simplex LC-type cables, one for transmit (TX) and one for receive (RX).

Figure 3-26 LC Type Cables

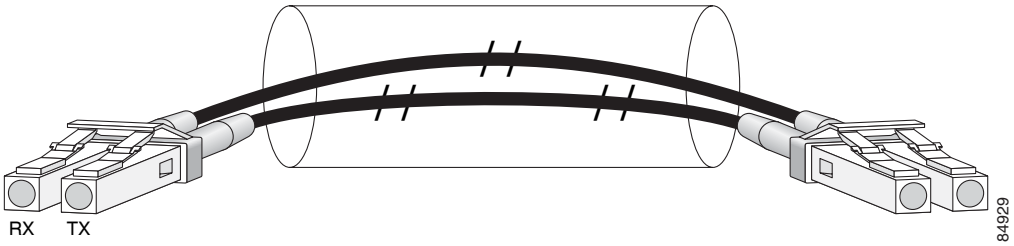

OC-48 Module Connections

Table 3-29 describes the OC-48 specifications for use with the 2-Port and 4-Port OC-48c/STM-16 POS/RPR SPA.

Table 3-29 OC-48 Specifications

Specification	Description
Wavelength	OC-48 SR: 1266 nm to 1360 nm OC-48 IR-1: 1260 nm to 1360 nm OC-48 LR-2: 1500 nm to 1580 nm
Cabling distance (maximum)	OC-48 SR: 2 km (1.2 miles) OC-48 IR-1: 15 km (9.3 miles) OC-48 LR-2: 80 km (49.7 miles)
Operating case temperature range	OC-48 SR: 23 to 158°F (–5 to 70°C) OC-48 IR-1: 23 to 158°F (–5 to 70°C) OC-48 LR-2: 23 to 158°F (–5 to 70°C)
TX power	OC-48 SR: –10 to –3 dBm OC-48 IR-1: –5 to 0 dBm OC-48 LR-2: –2 to +3 dBm
Receiver sensitivity (maximum)	OC-48 SR: –18 dBm OC-48 IR-1: –18 dBm OC-48 LR-2: –28 dBm
RX overload	OC-48 SR: –3 dBm OC-48 IR-1: 0 dBm OC-48 LR-2: –9 dBm
Maximum receiver power damage	OC-48 SR: 5 dBm OC-48 IR-1: 5 dBm OC-48 LR-2: 5 dBm

1-Port OC-12c/STM-4 POS SPA Overview

The 1-Port OC-12c/STM-4 POS SPA is a single-height SPA and installs into one SIP subslot. The 1-Port OC-12c/STM-4 POS SPA with a small form-factor pluggable (SFP) optical transceiver module provides SONET and SDH network connectivity with a bandwidth of 622.08 Mbps.

For more information about SPAs and their compatibility with SIPs and modular optics, see the "SIP and SPA Compatibility" section on page 1-2.

The following sections describe the 1-Port OC-12c/STM-4 POS SPA:

- 1-Port OC-12c/STM-4 POS SPA LEDs, page 3-38
- 1-Port OC-12c/STM-4 POS SPA Interface Specifications, page 3-39
- 1-Port OC-12c/STM-4 POS SPA SFP Optical Transceiver Modules and Cables, page 3-39

1-Port OC-12c/STM-4 POS SPA LEDs

The 1-Port OC-12c/STM-4 POS SPA has three types of LEDs: two LEDs for each port on the SPA, and one STATUS LED, as shown in Figure 3-27.

Figure 3-27 1-Port OC-12c/STM-4 POS SPA Faceplate

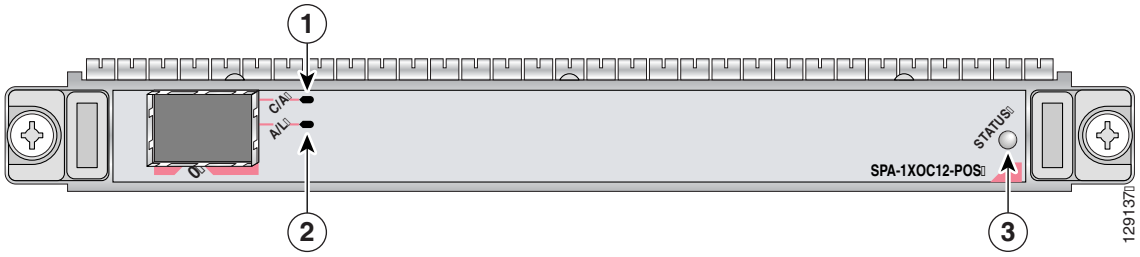

1	C/A (Carrier/Alarm) LED	3	STATUS LED
2	A/L (Active Loopback) LED		

Table 3-30 describes the 1-Port OC-12c/STM-4 POS SPA LEDs.

Table 3-30 1-Port OC-12c/STM-4 POS SPA LEDs

LED Label	Color	State	Meaning
C/A	Off	Off	Port is not enabled by software.
	Green	On	Port is enabled by software, and there is a valid SONET signal without any alarms.
	Amber	On	Port is enabled by software, and there is at least one alarm.
A/L	Off	Off	Port is not enabled by software.
	Green	On	Port is enabled by software, and loopback is off.
	Amber	On	Port is enabled by software, and loopback is on.

Table 3-30 1-Port OC-12c/STM-4 POS SPA LEDs (continued)

LED Label	Color	State	Meaning
STATUS	Off	Off	SPA power is off.
	Green	On	SPA is ready and operational.
	Amber	On	SPA power is on and good, and the SPA is being configured.

1-Port OC-12c/STM-4 POS SPA Interface Specifications

The framer processes incoming and outgoing SONET or SDH frames. The framer operates at OC-12c/STM-4 line rates (622.08 Mbps).

Packet data is transported with a user-configured encapsulation (such as Point-to-Point Protocol [PPP]) and is mapped into the STS-12c/STM-4 frame.

The 1-Port OC-12c/STM-4 POS SPA interface is compliant with the following RFCs:

- RFC 1619, *PPP over SONET/SDH*
- RFC 1662, *PPP in HDLC-like Framing*

The 1-Port OC-12c/STM-4 POS SPA also provides support for SNMP v1 agent (RFC 1155–1157) and RFC 1213:

- RFC 1155, *Structure and Identification of Management Information for TCP/IP-based Internets*
- RFC 1156, *Management Information Base for Network Management of TCP/IP-Based Internets*
- RFC 1157, *Simple Network Management Protocol (SNMP)*
- RFC 1213, *Management Information Base (MIB) for Network Management of TCP/IP-Based Internets:MIB II*

1-Port OC-12c/STM-4 POS SPA SFP Optical Transceiver Modules and Cables

The 1-Port OC-12c/STM-4 POS SPA uses a small form-factor pluggable (SFP) optical transceiver module installed in the port for SONET and SDH single-mode and multimode optical fiber connection (see Figure 3-28).

Cisco qualifies the optics that are approved for use with its SPAs. The 1-Port OC-12c/STM-4 POS SPA supports the following types of optical transceiver modules:

- Multimode (MM) SFP module—SFP-OC12-MM
- Short-reach (SR) SFP module—SFP-OC12-SR
- Intermediate-reach (IR) SFP module (15 km)—SFP-OC12-IR1
- Long-reach (LR) SFP module (40 km)—SFP-OC12-LR1
- Long-reach (LR) SFP module (80 km)—SFP-OC12-LR2

Figure 3-28 SFP Optics Module

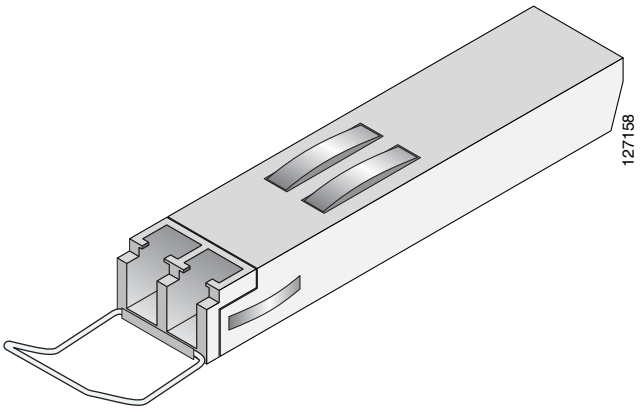

The SFP optical transceiver modules used with the 1-Port OC-12c/STM-4 POS SPA provide the following optical fiber options:

- Multimode—622.08-Mbps, OC-12 optical fiber (SONET STS-12c or SDH STM-4)

  Use a multimode optical fiber that has a core/cladding diameter of 62.5/125 microns.

- Single-mode—622.08-Mbps, OC-12 optical fiber (SONET STS-12c or SDH STM-4)

  Use a single-mode optical fiber that has a modal-field diameter of 8.7 ±0.5 microns. (Nominal diameter is approximately 10/125 microns.)

For single-mode and multimode optical fiber connections, you can use either a duplex LC-type cable (see Figure 3-29) or two simplex LC-type cables, one for transmit (TX) and one for receive (RX).

Use single-mode (for intermediate- or long-reach configurations) or multimode optical fiber cable to connect your router to a network or to connect two 1-Port OC-12c/STM-4 POS SPA-equipped routers back-to-back.

Long-range SFP optical transceiver modules (for long-reach configurations) cannot be connected back-to-back without using an attenuator between the two of them.

Figure 3-29 LC Type Cables

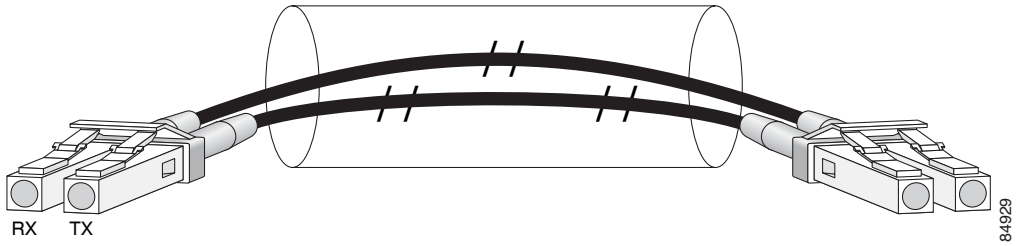

OC-12 Module Connections

Table 3-31 shows the OC-12 specifications of the optics on the 1-Port OC-12c/STM-4 POS SPA.

Table 3-31 OC-12 Specifications

Specification	Description
Wavelength	OC-12 MM: 1270 nm to 1380 nm OC-12 SR: 1261 nm to 1360 nm OC-12 IR-1: 1293 nm to 1334 nm OC-12 LR-1: 1280 nm to 1335 nm OC-12 LR-2: 1480 nm to 1580 nm
Cabling distance (maximum)	OC-12 MM: 0.5 km (0.3 miles) OC-12 SR: 2 km (1.2 miles) OC-12 IR-1: 15 km (9.3 miles) OC-12 LR-1: 40 km (24.8 miles) OC-12 LR-2: 80 km (49.7 miles)
Operating case temperature range	OC-12 MM: 23 to 185°F (–5 to 85°C) OC-12 SR: 23 to 185°F (–5 to 85°C) OC-12 IR-1: 23 to 185°F (–5 to 85°C) OC-12 LR-1: 23 to 185°F (–5 to 85°C) OC-12 LR-2: 23 to 185°F (–5 to 85°C)
TX power	OC-12 MM: –20 to –14 dBm OC-12 SR: –15 to –8 dBm OC-12 IR-1: –15 to –8 dBm OC-12 LR-1: –3 to 2 dBm OC-12 LR-2: –3 to 2 dBm
Receiver sensitivity (maximum)	OC-12 MM: –26 dBm OC-12 SR: –23 dBm OC-12 IR-1: –28 dBm OC-12 LR-1: –28 dBm OC-12 LR-2: –28 dBm
RX overload	OC-12 MM: –6 dBm OC-12 SR: –8 dBm OC-12 IR-1: –8 dBm OC-12 LR-1: –8 dBm OC-12 LR-2: –8 dBm
Maximum receiver power damage	OC-12 MM: 5 dBm OC-12 SR: 5 dBm OC-12 IR-1: 5 dBm OC-12 LR-1: 5 dBm OC-12 LR-2: 5 dBm

CHAPTER 4

Preparing to Install a SIP or a Shared Port Adapter

This chapter describes the general equipment, safety, and site preparation requirements for installing SIPs and SPAs. This chapter contains the following sections:

- Required Tools and Equipment, page 4-1
- Safety Guidelines, page 4-1
- Laser/LED Safety, page 4-9

Required Tools and Equipment

You need the following tools and parts to install SIPs and SPAs. If you need additional equipment, contact a service representative for ordering information.

- Shared port adapter interface processor (SIP)
- Shared port adapter (SPA)
- Number 1 Phillips screwdriver
- Number 2 Phillips screwdriver
- 3/16-inch flat-blade screwdriver
- Your own electrostatic discharge (ESD)-prevention equipment or the disposable grounding wrist strap supplied with the SIP or SPA
- Antistatic mat
- Antistatic container

Safety Guidelines

This section provides safety guidelines that you should follow when working with any equipment that connects to electrical power or telephone wiring.

Safety Warnings

Safety warnings appear throughout this publication in procedures that, if performed incorrectly, might harm you. A warning symbol precedes each warning statement.

Warning Definition

Warning **IMPORTANT SAFETY INSTRUCTIONS**

This warning symbol means danger. You are in a situation that could cause bodily injury. Before you work on any equipment, be aware of the hazards involved with electrical circuitry and be familiar with standard practices for preventing accidents. Use the statement number provided at the end of each warning to locate its translation in the translated safety warnings that accompanied this device. Statement 1071

SAVE THESE INSTRUCTIONS

Waarschuwing **BELANGRIJKE VEILIGHEIDSINSTRUCTIES**

Dit waarschuwingssymbool betekent gevaar. U verkeert in een situatie die lichamelijk letsel kan veroorzaken. Voordat u aan enige apparatuur gaat werken, dient u zich bewust te zijn van de bij elektrische schakelingen betrokken risico's en dient u op de hoogte te zijn van de standaard praktijken om ongelukken te voorkomen. Gebruik het nummer van de verklaring onderaan de waarschuwing als u een vertaling van de waarschuwing die bij het apparaat wordt geleverd, wilt raadplegen.

BEWAAR DEZE INSTRUCTIES

Varoitus **TÄRKEITÄ TURVALLISUUSOHJEITA**

Tämä varoitusmerkki merkitsee vaaraa. Tilanne voi aiheuttaa ruumiillisia vammoja. Ennen kuin käsittelet laitteistoa, huomioi sähköpiirien käsittelemiseen liittyvät riskit ja tutustu onnettomuuksien yleisiin ehkäisytapoihin. Turvallisuusvaroitusten käännökset löytyvät laitteen mukana toimitettujen käännettyjen turvallisuusvaroitusten joukosta varoitusten lopussa näkyvien lausuntonumeroiden avulla.

SÄILYTÄ NÄMÄ OHJEET

Attention **IMPORTANTES INFORMATIONS DE SÉCURITÉ**

Ce symbole d'avertissement indique un danger. Vous vous trouvez dans une situation pouvant entraîner des blessures ou des dommages corporels. Avant de travailler sur un équipement, soyez conscient des dangers liés aux circuits électriques et familiarisez-vous avec les procédures couramment utilisées pour éviter les accidents. Pour prendre connaissance des traductions des avertissements figurant dans les consignes de sécurité traduites qui accompagnent cet appareil, référez-vous au numéro de l'instruction situé à la fin de chaque avertissement.

CONSERVEZ CES INFORMATIONS

Warnung **WICHTIGE SICHERHEITSHINWEISE**

Dieses Warnsymbol bedeutet Gefahr. Sie befinden sich in einer Situation, die zu Verletzungen führen kann. Machen Sie sich vor der Arbeit mit Geräten mit den Gefahren elektrischer Schaltungen und den üblichen Verfahren zur Vorbeugung vor Unfällen vertraut. Suchen Sie mit der am Ende jeder Warnung angegebenen Anweisungsnummer nach der jeweiligen Übersetzung in den übersetzten Sicherheitshinweisen, die zusammen mit diesem Gerät ausgeliefert wurden.

BEWAHREN SIE DIESE HINWEISE GUT AUF.

Avvertenza **IMPORTANTI ISTRUZIONI SULLA SICUREZZA**

Questo simbolo di avvertenza indica un pericolo. La situazione potrebbe causare infortuni alle persone. Prima di intervenire su qualsiasi apparecchiatura, occorre essere al corrente dei pericoli relativi ai circuiti elettrici e conoscere le procedure standard per la prevenzione di incidenti. Utilizzare il numero di istruzione presente alla fine di ciascuna avvertenza per individuare le traduzioni delle avvertenze riportate in questo documento.

CONSERVARE QUESTE ISTRUZIONI

Advarsel **VIKTIGE SIKKERHETSINSTRUKSJONER**

Dette advarselssymbolet betyr fare. Du er i en situasjon som kan føre til skade på person. Før du begynner å arbeide med noe av utstyret, må du være oppmerksom på farene forbundet med elektriske kretser, og kjenne til standardprosedyrer for å forhindre ulykker. Bruk nummeret i slutten av hver advarsel for å finne oversettelsen i de oversatte sikkerhetsadvarslene som fulgte med denne enheten.

TA VARE PÅ DISSE INSTRUKSJONENE

Aviso **INSTRUÇÕES IMPORTANTES DE SEGURANÇA**

Este símbolo de aviso significa perigo. Você está em uma situação que poderá ser causadora de lesões corporais. Antes de iniciar a utilização de qualquer equipamento, tenha conhecimento dos perigos envolvidos no manuseio de circuitos elétricos e familiarize-se com as práticas habituais de prevenção de acidentes. Utilize o número da instrução fornecido ao final de cada aviso para localizar sua tradução nos avisos de segurança traduzidos que acompanham este dispositivo.

GUARDE ESTAS INSTRUÇÕES

¡Advertencia! **INSTRUCCIONES IMPORTANTES DE SEGURIDAD**

Este símbolo de aviso indica peligro. Existe riesgo para su integridad física. Antes de manipular cualquier equipo, considere los riesgos de la corriente eléctrica y familiarícese con los procedimientos estándar de prevención de accidentes. Al final de cada advertencia encontrará el número que le ayudará a encontrar el texto traducido en el apartado de traducciones que acompaña a este dispositivo.

GUARDE ESTAS INSTRUCCIONES

Varning! **VIKTIGA SÄKERHETSANVISNINGAR**

Denna varningssignal signalerar fara. Du befinner dig i en situation som kan leda till personskada. Innan du utför arbete på någon utrustning måste du vara medveten om farorna med elkretsar och känna till vanliga förfaranden för att förebygga olyckor. Använd det nummer som finns i slutet av varje varning för att hitta dess översättning i de översatta säkerhetsvarningar som medföljer denna anordning.

SPARA DESSA ANVISNINGAR

Figyelem **FONTOS BIZTONSÁGI ELOÍRÁSOK**

Ez a figyelmezeto jel veszélyre utal. Sérülésveszélyt rejto helyzetben van. Mielott bármely berendezésen munkát végezte, legyen figyelemmel az elektromos áramkörök okozta kockázatokra, és ismerkedjen meg a szokásos balesetvédelmi eljárásokkal. A kiadványban szereplo figyelmeztetések fordítása a készülékhez mellékelt biztonsági figyelmeztetések között található; a fordítás az egyes figyelmeztetések végén látható szám alapján keresheto meg.

ORIZZE MEG EZEKET AZ UTASÍTÁSOKAT!

Предупреждение **ВАЖНЫЕ ИНСТРУКЦИИ ПО СОБЛЮДЕНИЮ ТЕХНИКИ БЕЗОПАСНОСТИ**

Этот символ предупреждения обозначает опасность. То есть имеет место ситуация, в которой следует опасаться телесных повреждений. Перед эксплуатацией оборудования выясните, каким опасностям может подвергаться пользователь при использовании электрических цепей, и ознакомьтесь с правилами техники безопасности для предотвращения возможных несчастных случаев. Воспользуйтесь номером заявления, приведенным в конце каждого предупреждения, чтобы найти его переведенный вариант в переводе предупреждений по безопасности, прилагаемом к данному устройству.

СОХРАНИТЕ ЭТИ ИНСТРУКЦИИ

警告 重要的安全性说明

此警告符号代表危险。您正处于可能受到严重伤害的工作环境中。在您使用设备开始工作之前，必须充分意识到触电的危险，并熟练掌握防止事故发生的标准工作程序。请根据每项警告结尾提供的声明号码来找到此设备的安全性警告说明的翻译文本。

请保存这些安全性说明

警告 安全上の重要な注意事項

「危険」の意味です。人身事故を予防するための注意事項が記述されています。装置の取り扱い作業を行うときは、電気回路の危険性に注意し、一般的な事故防止策に留意してください。警告の各国語版は、各注意事項の番号を基に、装置に付属の「Translated Safety Warnings」を参照してください。

これらの注意事項を保管しておいてください。

주의 중요 안전 지침

이 경고 기호는 위험을 나타냅니다. 작업자가 신체 부상을 일으킬 수 있는 위험한 환경에 있습니다. 장비에 작업을 수행하기 전에 전기 회로와 관련된 위험을 숙지하고 표준 작업 관례를 숙지하여 사고를 방지하십시오. 각 경고의 마지막 부분에 있는 경고문 번호를 참조하여 이 장치와 함께 제공되는 번역된 안전 경고문에서 해당 번역문을 찾으십시오.

이 지시 사항을 보관하십시오.

تحذير إرشادات الأمان الهامة

يوضح رمز التحذير هذا وجود خطر. وهذا يعني أنك متواجد في مكان قد ينتج عنه التعرض لإصابات. قبل بدء العمل، احذر مخاطر التعرض للصدمات الكهربائية وكن على علم بالإجراءات القياسية للحيلولة دون وقوع أي حوادث. استخدم رقم البيان الموجود في أخر كل تحذير لتحديد مكان ترجمته داخل تحذيرات الأمان المترجمة التي تأتي مع الجهاز.

قم بحفظ هذه الإرشادات

Upozorenje **VAŽNE SIGURNOSNE NAPOMENE**

Ovaj simbol upozorenja predstavlja opasnost. Nalazite se u situaciji koja može prouzročiti tjelesne ozljede. Prije rada s bilo kojim uređajem, morate razumjeti opasnosti vezane uz električne sklopove, te biti upoznati sa standardnim načinima izbjegavanja nesreća. U prevedenim sigurnosnim upozorenjima, priloženima uz uređaj, možete prema broju koji se nalazi uz pojedino upozorenje pronaći i njegov prijevod.

SAČUVAJTE OVE UPUTE

Upozornění **DŮLEŽITÉ BEZPEČNOSTNÍ POKYNY**

Tento upozorňující symbol označuje nebezpečí. Jste v situaci, která by mohla způsobit nebezpečí úrazu. Před prací na jakémkoliv vybavení si uvědomte nebezpečí související s elektrickými obvody a seznamte se se standardními opatřeními pro předcházení úrazům. Podle čísla na konci každého upozornění vyhledejte jeho překlad v přeložených bezpečnostních upozorněních, která jsou přiložena k zařízení.

USCHOVEJTE TYTO POKYNY

Προειδοποίηση ΣΗΜΑΝΤΙΚΕΣ ΟΔΗΓΙΕΣ ΑΣΦΑΛΕΙΑΣ

Αυτό το προειδοποιητικό σύμβολο σημαίνει κίνδυνο. Βρίσκεστε σε κατάσταση που μπορεί να προκαλέσει τραυματισμό. Πριν εργαστείτε σε οποιοδήποτε εξοπλισμό, να έχετε υπόψη σας τους κινδύνους που σχετίζονται με τα ηλεκτρικά κυκλώματα και να έχετε εξοικειωθεί με τις συνήθεις πρακτικές για την αποφυγή ατυχημάτων. Χρησιμοποιήστε τον αριθμό δήλωσης που παρέχεται στο τέλος κάθε προειδοποίησης, για να εντοπίσετε τη μετάφρασή της στις μεταφρασμένες προειδοποιήσεις ασφαλείας που συνοδεύουν τη συσκευή.

ΦΥΛΑΞΤΕ ΑΥΤΕΣ ΤΙΣ ΟΔΗΓΙΕΣ

אזהרה

הוראות בטיחות חשובות

סימן אזהרה זה מסמל סכנה. אתה נמצא במצב העלול לגרום לפציעה. לפני שתעבוד עם ציוד כלשהו, עליך להיות מודע לסכנות הכרוכות במעגלים חשמליים ולהכיר את הנהלים המקובלים למניעת תאונות. השתמש במספר ההוראה המסופק בסופה של כל אזהרה כד לאתר את התרגום באזהרות הבטיחות המתורגמות שמצורפות להתקן.

שמור הוראות אלה

Ostrzeżenie

WAŻNE INSTRUKCJE DOTYCZĄCE BEZPIECZEŃSTWA

Ten symbol ostrzeżenia oznacza niebezpieczeństwo. Zachodzi sytuacja, która może powodować obrażenia ciała. Przed przystąpieniem do prac przy urządzeniach należy zapoznać się z zagrożeniami związanymi z układami elektrycznymi oraz ze standardowymi środkami zapobiegania wypadkom. Na końcu każdego ostrzeżenia podano numer, na podstawie którego można odszukać tłumaczenie tego ostrzeżenia w dołączonym do urządzenia dokumencie z tłumaczeniami ostrzeżeń.

NINIEJSZE INSTRUKCJE NALEŻY ZACHOWAĆ

Upozornenie

DÔLEŽITÉ BEZPEČNOSTNÉ POKYNY

Tento varovný symbol označuje nebezpečenstvo. Nachádzate sa v situácii s nebezpečenstvom úrazu. Pred prácou na akomkoľvek vybavení si uvedomte nebezpečenstvo súvisiace s elektrickými obvodmi a oboznámte sa so štandardnými opatreniami na predchádzanie úrazom. Podľa čísla na konci každého upozornenia vyhľadajte jeho preklad v preložených bezpečnostných upozorneniach, ktoré sú priložené k zariadeniu.

USCHOVAJTE SI TENTO NÁVOD

Warning **Do not work on the system or connect or disconnect cables during periods of lightning activity.** Statement 1001

Warning **To avoid electric shock, do not connect safety extra-low voltage (SELV) circuits to telephone-network voltage (TNV) circuits. LAN ports contain SELV circuits, and WAN ports contain TNV circuits. Some LAN and WAN ports both use RJ-45 connectors. Use caution when connecting cables.** Statement 1021

Warning **Hazardous network voltages are present in WAN ports regardless of whether power to the unit is OFF or ON. To avoid electric shock, use caution when working near WAN ports. When detaching cables, detach the end away from the unit first.** Statement 1026

Warning **Blank faceplates and cover panels serve three important functions: they prevent exposure to hazardous voltages and currents inside the chassis; they contain electromagnetic interference (EMI) that might disrupt other equipment; and they direct the flow of cooling air through the chassis. Do not operate the system unless all cards, faceplates, front covers, and rear covers are in place.** Statement 1029

Warning **Hazardous voltage or energy is present on the backplane when the system is operating. Use caution when servicing.** Statement 1034

Warning **Do not use this product near water; for example, near a bath tub, wash bowl, kitchen sink or laundry tub, in a wet basement, or near a swimming pool.** Statement 1035

Warning **Never install telephone jacks in wet locations unless the jack is specifically designed for wet locations.** Statement 1036

Warning **Never touch uninsulated telephone wires or terminals unless the telephone line has been disconnected at the network interface.** Statement 1037

Warning **Avoid using a telephone (other than a cordless type) during an electrical storm. There may be a remote risk of electric shock from lightning.** Statement 1038

Warning **To report a gas leak, do not use a telephone in the vicinity of the leak.** Statement 1039

Warning **Before opening the unit, disconnect the telephone-network cables to avoid contact with telephone-network voltages.** Statement 1041

Warning **This equipment must be installed and maintained by service personnel as defined by AS/NZS 3260. Incorrectly connecting this equipment to a general-purpose outlet could be hazardous. The telecommunications lines must be disconnected 1) before unplugging the main power connector or 2) while the housing is open, or both.** Statement 1043

Warning **The covers are an integral part of the safety design of the product. Do not operate the unit without the covers installed.** Statement 1077

Electrical Equipment Guidelines

Follow these basic guidelines when working with any electrical equipment:

- Before beginning any procedures requiring access to the chassis interior, locate the emergency power-off switch for the room in which you are working.
- Disconnect all power and external cables before moving a chassis.
- Do not work alone when potentially hazardous conditions exist.
- Never assume that power has been disconnected from a circuit; always check.
- Do not perform any action that creates a potential hazard to people or makes the equipment unsafe; carefully examine your work area for possible hazards such as moist floors, ungrounded power extension cables, and missing safety grounds.

Caution This equipment is suitable for intrabuilding wiring only.

Telephone Wiring Guidelines

Use the following guidelines when working with any equipment that is connected to telephone wiring or to other network cabling:

- Never install telephone wiring during a lightning storm.
- Never install telephone jacks in wet locations unless the jack is specifically designed for wet locations.
- Never touch uninsulated telephone wires or terminals unless the telephone line has been disconnected at the network interface.
- Use caution when installing or modifying telephone lines.

Preventing Electrostatic Discharge Damage

Electrostatic discharge (ESD) damage, which can occur when electronic cards or components are improperly handled, results in complete or intermittent failures. SIPs, SPAs, and processor modules comprise printed circuit boards that are fixed in metal carriers. Electromagnetic interference (EMI) shielding and connectors are integral components of the carrier. Although the metal carrier helps to protect the board from ESD, use a preventive antistatic strap during handling.

Following are guidelines for preventing ESD damage:

- Always use an ESD wrist or ankle strap and ensure that it makes good skin contact.
- Connect the equipment end of the strap to an unfinished chassis surface.
- When installing a component, use any available ejector levers or captive installation screws to properly seat the bus connectors in the backplane or midplane. These devices prevent accidental removal, provide proper grounding for the system, and help to ensure that bus connectors are properly seated.
- When removing a component, use any available ejector levers or captive installation screws to release the bus connectors from the backplane or midplane.
- Handle carriers by available handles or edges only; avoid touching the printed circuit boards or connectors.

- Place a removed board component-side-up on an antistatic surface or in a static shielding container. If you plan to return the component to the factory, immediately place it in a static shielding container.
- Avoid contact between the printed circuit boards and clothing. The wrist strap only protects components from ESD voltages on the body; ESD voltages on clothing can still cause damage.
- Never attempt to remove the printed circuit board from the metal carrier.

Caution For safety, periodically check the resistance value of the antistatic strap. The measurement should be between 1 and 10 megohms (Mohms).

Laser/LED Safety

An optical single-mode transmitter uses a small laser to transmit the light signal to the network ring. Keep the transmit port covered whenever a cable is not connected to it. Although multimode transceivers typically use LEDs for transmission, it is good practice to keep open ports covered and avoid staring into open ports or apertures. The single-mode aperture port contains a laser warning label, as shown in Figure 4-1. The multimode aperture contains a Class 1 LED warning label, as shown in Figure 4-2. These warnings apply to SPAs and SFP modules that transmit signals via an optical carrier signal.

Figure 4-1 Class 1 Laser Warning Labels for Single-Mode Port

Figure 4-2 Class 1 LED Warning Label for Multimode Port

Warning **Class 1 laser product.** Statement 1008

Warning **Class 1 LED product.** Statement 1027

Warning **Invisible laser radiation may be emitted from disconnected fibers or connectors. Do not stare into beams or view directly with optical instruments.** Statement 1051

CHAPTER 5

Installing and Removing a SIP

This chapter describes how to install or remove SIPs on the Cisco ASR 1000 Series Aggregation Services Routers. This chapter contains the following sections:

- Handling SIPs, page 5-1
- Online Insertion and Removal, page 5-2
- SIP Installation and Removal, page 5-8

Handling SIPs

Each SIP circuit board is mounted to a metal carrier and is sensitive to electrostatic discharge (ESD) damage. See the "Preventing Electrostatic Discharge Damage" section on page 4-8 for ESD precautions.

Before you begin installation, read Chapter 4, "Preparing to Install a SIP or a Shared Port Adapter," for a list of parts and tools required for installation.

Caution Always handle the SIP by the carrier edges and handle; never touch the SIP components or connector pins. (See Figure 5-1.)

When a slot is not in use, a blank filler plate must be installed in the empty slot to allow the router or switch to conform to electromagnetic interference (EMI) emissions requirements and to allow proper airflow across the installed modules. If you plan to install a SIP in a slot that is not in use, you must first remove the blank filler plate.

Figure 5-1 Handling a SIP

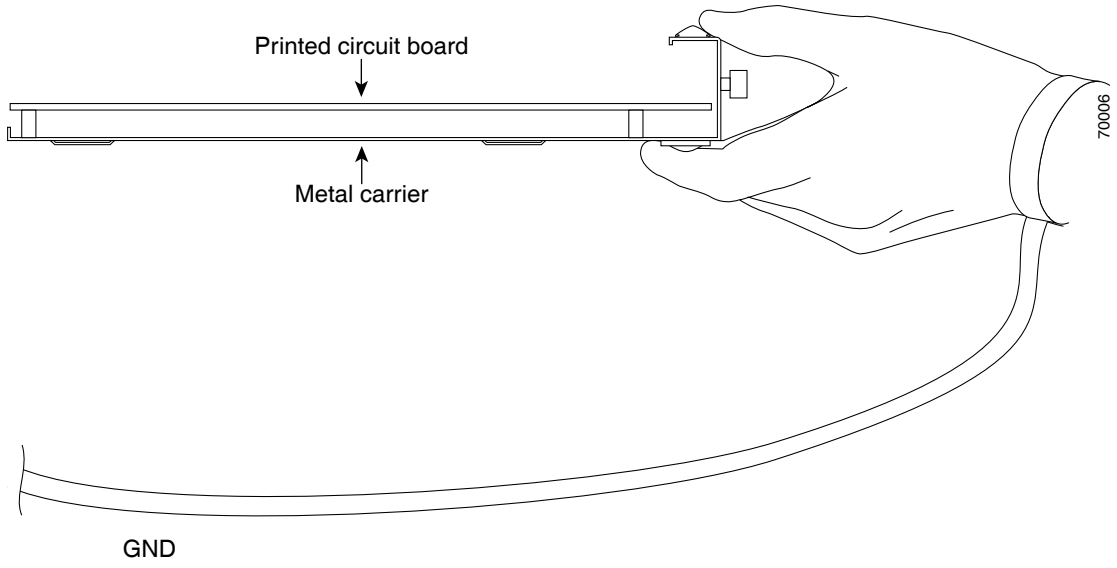

Online Insertion and Removal

The Cisco ASR 1000 Series Routers support online insertion and removal (OIR) of the SPA interface processor (SIP), in addition to each of the shared port adapters (SPAs). Therefore, you can remove a SIP with its SPAs still intact, or you can remove a SPA independently from the SIP, leaving the SIP installed in the router.

This section includes the following topics on OIR support:

- Preparing for Online Removal of a SIP, page 5-2
- Verifying Deactivation and Activation of a SIP, page 5-3
- Preparing for Online Removal of a SPA, page 5-4
- Verifying Deactivation and Activation of a SPA, page 5-7
- Deactivation and Activation Configuration Examples, page 5-7

Preparing for Online Removal of a SIP

The Cisco ASR 1000 Series Routers support OIR of the SIP. To do this, you can power down a SIP (which automatically deactivates any installed SPAs) and remove the SIP with the SPAs still intact.

Although graceful deactivation of a SIP is preferred using the **hw-module slot stop** command, the Cisco ASR 1000 Series Routers support removal of the SIP without deactivating it first. If you plan to remove a SIP, you can deactivate the SIP first, using the **hw-module slot stop** command in global configuration mode. When you deactivate a SIP using this command, it automatically deactivates each of the SPAs that are installed in that SIP. Therefore, it is not necessary to deactivate each of the SPAs prior to deactivating the SIP.

Either a blank filler plate or a functional SPA should reside in every subslot of a SIP during normal operation.

Deactivating a SIP

To deactivate a SIP and its installed SPAs prior to removal of the SIP, use the following command in global configuration mode:

Command	Purpose
Router(config)# **hw-module slot** *slot-number* **stop**	Shuts down any installed interfaces, and deactivates the SIP in the specified slot, where: • *slot-number*—Specifies the SIP chassis slot number where the SIP is installed. • **stop**—Deactivates the SIP and places it in reset mode.

For more information about chassis slot numbering, see the "Identifying Slots and Subslots for SIPs and SPAs" section on page 2-2.

Reactivating a SIP

If you did deactivate the SIP using the **hw-module slot stop** command, then you do not need to reactivate the SPAs after an OIR of the SIP. The installed SPAs automatically reactivate upon reactivation of the SIP in the Cisco ASR 1000 Series Router.

For example, consider the case where you remove a SIP from the Cisco ASR 1000 Series Router to replace it with another SIP. You reinstall the same SPAs into the new SIP. When you enter the **hw-module slot start** command on the Cisco ASR 1000 Series Router, the SPAs automatically reactivate with the new SIP.

To activate a SIP and its installed SPAs after the SIP has been deactivated, use the following command in global configuration mode:

Command	Purpose
Router(config)# **hw-module slot** *slot-number* **start**	Activates the SIP in the specified slot and its installed SPAs, where: • *slot-number*—Specifies the SIP chassis slot number where the SIP is installed. • **start**—Activates the SIP and removes it from reset mode.

For more information about chassis slot numbering, see the "Identifying Slots and Subslots for SIPs and SPAs" section on page 2-2.

Verifying Deactivation and Activation of a SIP

To verify the deactivation of a SIP, enter the **show platform** command in privileged EXEC configuration mode. Observe the State field associated with the SIP that you want to verify.

The following example shows that the Cisco ASR1000-SIP10 located in slot 1 is deactivated.

```
Router# show platform
Chassis type: ASR1006

Slot      Type                State                 Insert time (ago)
--------- ------------------- --------------------- -----------------
0         ASR1000-SIP10       ok                    2d20h
 0/0      SPA-1XOC12-POS      ok                    2d20h
 0/1      SPA-1XOC12-POS      ok                    1d21h
 0/2      SPA-5X1GE-V2        ok                    2d20h
 0/3      SPA-4XOC3-POS-V2    ok                    2d20h
1         ASR1000-SIP10       disabled              1d23h
R0        ASR1000-RP1         ok, active            1w3d
F0        ASR1000-ESP10       ok, active            1w3d
P0        Unknown             ps, fail              never
P1        Unknown             ps, fail              never

Slot      CPLD Version        Firmware Version
--------- ------------------- ----------------------------------------
0         06120701            12.2(20071009:051408) [gschnorr-mcp_...
1         07091401            12.2(20070807:170946) [gschnorr-mcp_...
R0        07010515            12.2(33r)XN2
F0        07021400            12.2(20071030:180953) [gschnorr-mcp_...
```

To verify activation and proper operation of a SIP, enter the **show platform** command and observe “ok” in the State field as shown in the following example:

```
Router# show platform
Chassis type: ASR1006

Slot      Type                State                 Insert time (ago)
--------- ------------------- --------------------- -----------------
0         ASR1000-SIP10       ok                    03:19:46
 0/0      SPA-5X1GE-V2        ok                    03:18:28
 0/1      SPA-8X1FE-TX-V2     ok                    03:18:28
 0/2      SPA-2XCT3/DS0       ok                    03:18:19
1         ASR1000-SIP10       ok                    03:19:46
 1/0      SPA-2XOC3-POS       ok                    03:18:28
 1/1      SPA-8XCHT1/E1       ok                    03:18:28
 1/2      SPA-2XT3/E3         ok                    03:18:18
R0        ASR1000-RP1         ok, active            03:19:46
F0        ASR1000-ESP10       ok, active            03:19:46
P0        ASR1006-PWR-AC      ok                    03:19:14
P1        ASR1006-FAN         ok                    03:19:14
```

Preparing for Online Removal of a SPA

The Cisco ASR 1000 Series Routers support OIR of a SPA independently of removing the SIP. This means that a SIP can remain installed in the Cisco ASR 1000 Series Router with one SPA remaining active, while you remove another SPA from one of the SIP subslots. If you are not planning to immediately replace a SPA into the SIP, then be sure to install a blank filler plate in the subslot. The SIP should always be fully installed with either functional SPAs or blank filler plates.

If you are planning to remove a SIP along with its SPAs, then you do not need to follow the instructions in this section. To remove a SIP, see the “Preparing for Online Removal of a SIP” section on page 5-2.

Deactivating a SPA

Although graceful deactivation of a SPA is preferred using the **hw-module subslot stop** command in EXEC mode, the Cisco ASR 1000 Series Routers support removal of the SPA without deactivating it first. Before deactivating a SPA, ensure that the SIP is seated securely into the slot before pulling out the SPA itself.

Note If you are preparing for an OIR of a SPA, it is not necessary to independently shut down each of the interfaces prior to deactivation of the SPA. The **hw-module slot stop** command in EXEC mode automatically stops traffic on the interfaces and deactivates them along with the SPA in preparation for OIR. In similar fashion, you do not need to independently restart any interfaces on a SPA after OIR of a SPA or SIP.

Choosing the Mode of the hw-module subslot Command

You can deactivate a SPA and all of its interfaces by using the **hw-module subslot** command in one of two modes:

- If you choose to use the **hw-module subslot shutdown** command in global configuration mode, you change the configuration so that no matter how many times the router is rebooted, the SPA will not boot. This command is useful when you need to shut down a SPA in a remote location and ensure that it does not come back up if the router is rebooted.
- If you choose to use the **hw-module subslot stop** command in EXEC mode, you cause the SPA to gracefully shut down. However, the SPA will come up again when executing the **hw-module subslot start** command.

To deactivate a SPA and all of its interfaces prior to removal of the SPA, use the following commands in global configuration mode:

Command	Purpose
Router(config)# **hw-module subslot** *slot-number/subslot-number* **shutdown** [**powered** | **unpowered**]	Deactivates the SPA in the specified slot and subslot of the SIP, where: • *slot-number*—Specifies the chassis slot number where the SIP is installed. • *subslot-number*—Specifies the subslot number on a SIP where a SPA is installed. • **shutdown**—Shuts down the specified SPA. • **powered**—(Optional) Shuts down the SPA and all of its interfaces, and leaves them in an administratively down state with power enabled. This is the default state. • **unpowered**—(Optional) Shuts down the SPA and all of its interfaces, and leaves them in an administratively down state without power.
Router(config)# **hw-module subslot** *slot-number/subslot-number* {**reload** | **stop** | **start**}	Deactivates the SPA in the specified slot and subslot of the SIP, where: • *slot-number*—Specifies the chassis slot number where the SIP is installed. • *subslot-number*—Specifies the subslot number on a SIP where a SPA is installed. • **reload**—Stops and restarts the specified SPA. • **stop**—Stops the specified SPA**.** • **start**—Starts the specified SPA.

For more information about chassis slot and SIP subslot numbering, refer to the "Identifying Slots and Subslots for SIPs and SPAs" section on page 2-2.

Reactivating a SPA

Note You do not need to reactivate a SPA after an OIR of either the SIP or a SPA if you did not deactivate the SPA prior to removal when using the **hw-module subslot** command in global configuration mode. If the Cisco ASR 1000 Series Router is running, then the SPAs automatically start upon insertion into the SIP or with insertion of a SIP into the Cisco ASR 1000 Series Router.

If you deactivate a SPA using the **hw-module subslot stop** command and need to reactivate it without performing an OIR, you must use the **hw-module subslot start** command to reactivate the SPA and its interfaces.

To activate a SPA and its interfaces after the SPA has been deactivated, use the following command in global configuration mode:

Command	Purpose
Router(config)# **no hw-module subslot** *slot-number/subslot-number* **shutdown**	Activates the SPA and its interfaces in the specified slot and subslot of the SIP, where: • *slot-number*—Specifies the chassis slot number where the SIP is installed. • *subslot-number*—Specifies the subslot number on a SIP where a SPA is installed.

Verifying Deactivation and Activation of a SPA

When you deactivate a SPA, the corresponding interfaces are also deactivated. This means that these interfaces will no longer appear in the output of the **show interface** command.

To verify the deactivation of a SPA, enter the **show hw-module subslot all oir** command in privileged EXEC configuration mode. Observe the Operational Status field associated with the SPA that you want to verify.

In the following example, the SPA located in subslot 1 of the SIP in slot 2 of the Cisco ASR 1000 Series Router is administratively down from the **hw-module subslot shutdown** command:

```
Router# show hw-module subslot all oir
Module         Model              Operational Status
-------------- ------------------ -------------------------
subslot 2/0    SPA-1X10GE-L-V2    ok
subslot 2/1    SPA-8X1GE-v2       admin down
```

To verify activation and proper operation of a SPA, enter the **show hw-module subslot all oir** command and observe “ok” in the Operational Status field as shown in the following example:

```
Router# show hw-module subslot all oir
Module         Model              Operational Status
-------------- ------------------ -------------------------
subslot 2/0    SPA-1X10GE-L-V2      ok
subslot 2/1    SPA-8X1GE-v2         ok
```

Deactivation and Activation Configuration Examples

This section provides the following examples of deactivating and activating SIPs and SPAs:

- Deactivation of a SIP Configuration Example, page 5-7
- Activation of a SIP Configuration Example, page 5-8
- Deactivation of a SPA Configuration Example, page 5-8
- Activation of a SPA Configuration Example, page 5-8

Deactivation of a SIP Configuration Example

Deactivate a SIP when you want to perform OIR of the SIP. The following example deactivates the SIP that is installed in slot 1 of the Cisco ASR 1000 Series Router, its SPAs, and all of the interfaces:

```
Router(config)# hw-module slot 1 stop
```

Activation of a SIP Configuration Example

Activate a SIP if you have previously deactivated it. If you did not deactivate the SPAs, the SPAs automatically reactivate with reactivation of the SIP.

The following example activates the SIP that is installed in slot 1 of the Cisco ASR 1000 Series Router, its SPAs, and all of the interfaces (as long as the **hw-module subslot shutdown** command was not issued to also deactivate the SPA):

```
Router(config)# hw-module slot 1 start
```

There are no corresponding console messages shown with activation using this command. If you re-enter the **hw-module slot start** command, a message displays indicating that the module is already enabled.

Deactivation of a SPA Configuration Example

Deactivate a SPA when you want to perform OIR of that SPA. The following example deactivates the SPA (and its interfaces) that is installed in subslot 0 of the SIP located in slot 1 of the Cisco ASR 1000 Series Router and removes power to the SPA.

```
Router(config)# hw-module subslot 1/0 shutdown unpowered
```

Activation of a SPA Configuration Example

Activate a SPA if you have previously deactivated it. If you have not deactivated a SPA and its interfaces during OIR of a SIP, then the SPA is automatically reactivated upon reactivation of the SIP.

The following example activates the SPA that is installed in subslot 0 of the SIP located in slot 1 of the Cisco ASR 1000 Series Router.

```
Router(config)# no hw-module subslot 1/0 shutdown
```

SIP Installation and Removal

This section provides step-by-step instructions for installing and removing a SIP.

Caution The SIP in the Cisco ASR 1002 Router is permanently installed and cannot be removed.

Caution When performing the following procedures, wear a grounding wrist strap to avoid ESD damage to the SIP. Some platforms have an ESD connector for attaching the wrist strap. Do not directly touch the midplane or backplane with your hand or any metal tool.

To install a SIP, refer to Figure 5-2 and do the following:

Step 1 Before inserting a SIP, make sure that the chassis is grounded.

Step 2 To insert the SIP, carefully align the edges of the SIP between the upper and lower edges of the router slot.

Step 3 Carefully slide the SIP into the router slot until the SIP makes contact with the backplane.

Step 4 Tighten the locking thumbscrews on both sides of the SIP.

Step 5 Connect all cables to each SPA.

To remove a SIP, refer to Figure 5-2 and do the following:

Step 1 To remove the SIP, first disconnect all cables from each SPA.

Step 2 Loosen the locking thumbscrews on both sides of the SIP.

Step 3 Slide the SIP out of the router slot. If you are removing a blank filler plate, pull the blank filler plate completely out of the router slot.

Figure 5-2 illustrates how to install and remove a SIP in Cisco ASR 1000 Series Routers.

Figure 5-2 SIP Installation and Removal

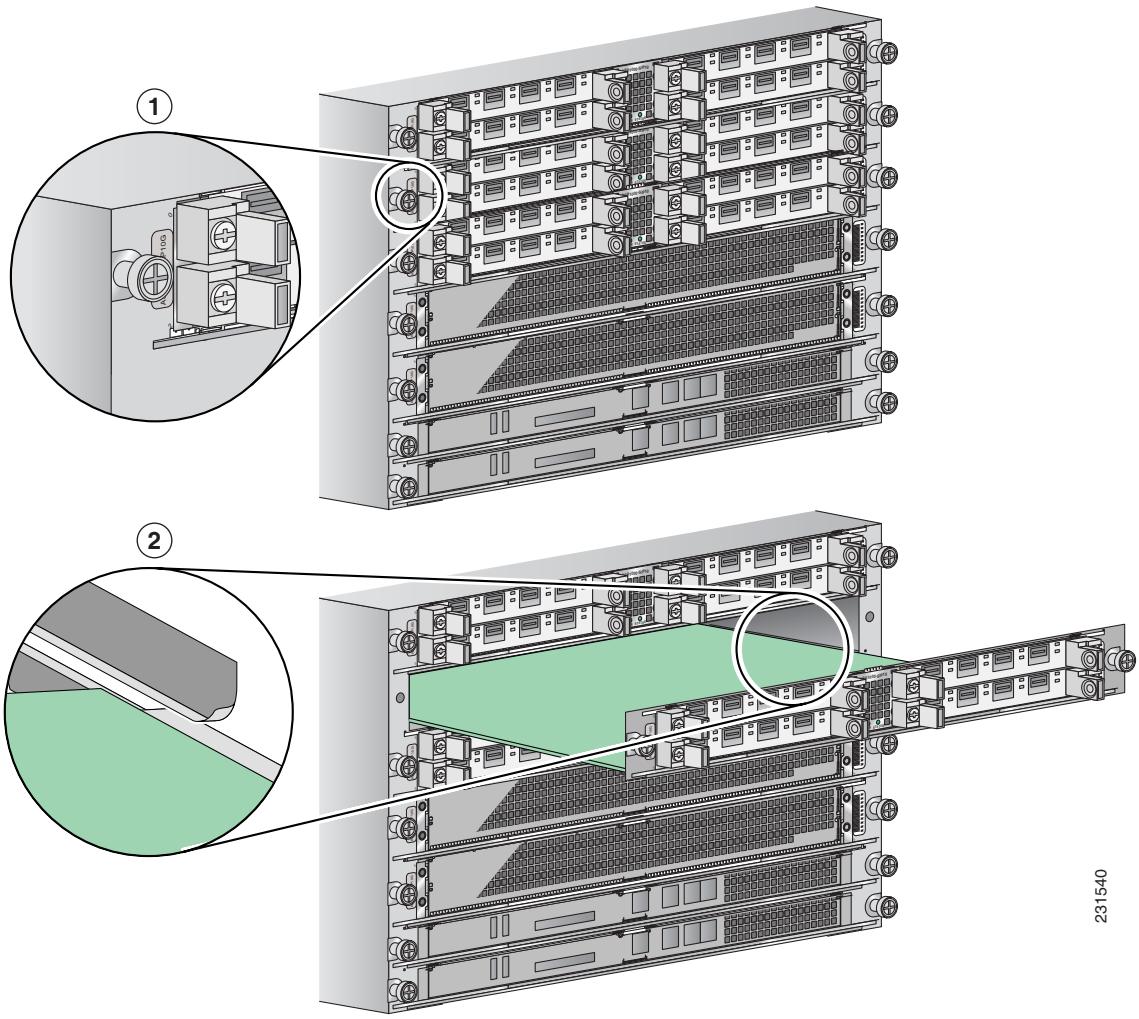

1	Captive installation screw	**2**	Guide rails

CHAPTER 6

Installing and Removing a Shared Port Adapter

This chapter describes how to install or remove SPAs on the Cisco ASR 1000 Series Aggregation Services Routers. This chapter contains the following sections:

- Handling SPAs, page 6-1
- SPA Installation and Removal, page 6-2
- Online Insertion and Removal, page 6-4
- Optical Device Maintenance, page 6-4
- Checking the Installation, page 6-4
- SPA Blank Filler Plates, page 6-6
- SPA Cable-Management Brackets, page 6-7

Handling SPAs

Each SPA circuit board is mounted to a metal carrier and is sensitive to electrostatic discharge (ESD) damage. See the "Preventing Electrostatic Discharge Damage" section on page 4-8 for ESD precautions.

Before you begin installation, read Chapter 4, "Preparing to Install a SIP or a Shared Port Adapter", for a list of parts and tools required for installation.

Caution Always handle the SPA by the carrier edges and handle; never touch the SPA components or connector pins. (See Figure 6-1.)

When a subslot is not in use, a SPA blank filler plate must fill the empty subslot to allow the router or switch to conform to electromagnetic interference (EMI) emissions requirements and to allow proper airflow across the SPAs. If you plan to install a SPA in a subslot that is not in use, you must first remove the SPA blank filler plate.

Figure 6-1 Handling a SPA

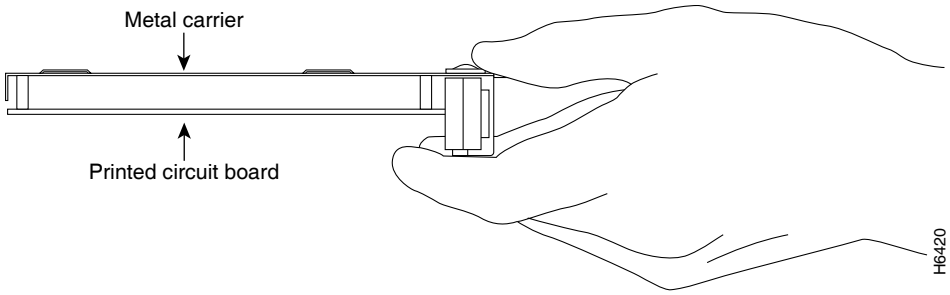

SPA Installation and Removal

This section provides step-by-step instructions for installing and removing a SPA in a SIP.

Caution When performing the following procedures, wear a grounding wrist strap to avoid ESD damage to the SPA. Some platforms have an ESD connector for attaching the wrist strap. Do not directly touch the midplane or backplane with your hand or any metal tool.

See Preventing Electrostatic Discharge Damage, page 4-8 for information about ESD.

Figure 6-2 illustrates how to install and remove a SPA in a SIP.

Figure 6-2 SPA Installation and Removal

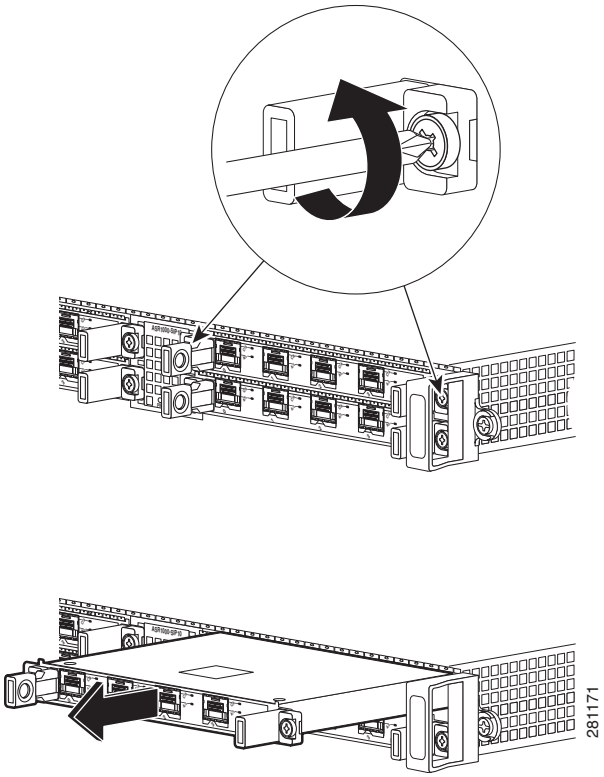

Installing a SPA in a SIP

To install a SPA in a SIP, refer to Figure 6-2 and do the following:

Step 1 To insert the SPA in the SIP, locate the guide rails inside the SIP that hold the SPA in place. They are at the top left and top right of the SPA slot and are recessed about an inch.

Step 2 Carefully slide the SPA all the way in the SIP until the SPA is firmly seated in the SPA interface connector. When fully seated, the SPA might be slightly behind the SIP faceplate.

Step 3 After the SPA is properly seated, fasten the SPA in place with the captive installation screws on either side of the SPA.

Removing a SPA from a SIP

To remove a SPA from a SIP, refer to Figure 6-2 and do the following:

Step 1 If attached, remove any cables from the SPA.

Step 2 To remove the SPA from the SIP, unfasten the captive installation screws on either side of the SPA.

Step 3 Grasp the handle on either side of the SPA and pull the SPA from the SIP.

Online Insertion and Removal

Cisco ASR 1000 Series Aggregation Services Routers SIPs and SPAs support online insertion and removal (OIR). SPAs can be inserted or removed independently from the SIP. OIR of a SIP with installed SPAs is also supported.

For more information about performing OIR, refer to the "Preparing for Online Removal of a SIP" section on page 5-2.

Optical Device Maintenance

Any contamination of the fiber connection can cause failure of the component or failure of the whole system. A particle that partially or completely blocks the core generates strong back reflections, which can cause instability in the laser system. Inspection, cleaning, and reinspection are critical steps to take before making fiber-optic connections.

Cleaning Optical Devices

See the *Inspection and Cleaning Procedures for Fiber-Optic Connections* and the *Compressed Air Cleaning Issues for Fiber-Optic Connections* documents for information on cleaning optical devices.

Checking the Installation

This section describes the procedures you can use to verify the SIP and SPA installation, and includes information on the following topics:

- Verifying the Installation, page 6-4
- Using show Commands to Verify SIP and SPA Status, page 6-5
- Using show Commands to Display SPA Information, page 6-6

Verifying the Installation

This section describes how to verify the SIP and SPA installation by observing the SIP LED states, SPA LED states, and the information displayed on the console terminal.

When the system has reinitialized all interfaces, the SIP STATUS LED should be green (on) and the SPA STATUS LEDs should be green (on). The port LEDs (C/A and A/L) may be green (on), depending on your connections and configuration. The console screen also displays a message as the system discovers each interface during reinitialization.

Use the following procedure to verify that a SIP and SPA are installed correctly:

Step 1 Observe the console display messages and verify that the system discovers the SIP, while the system reinitializes each interface, as follows:

- When a new SPA is inserted into the system, the default configuration will be used for the associated interfaces.
- As a SIP is initialized, the STATUS LED will first be amber, indicating that power is on, but the SIP is being configured. When the SIP is active, the STATUS LED will illuminate green.
- SPAs will follow the same sequence once the SIP has completed its initialization. The SPA STATUS LEDs will illuminate amber, turning to green when the SPAs become active.
- When the SIP and SPA STATUS LEDs are green, all associated interfaces are configurable.

Note Refer to the *Cisco ASR 1000 Series Aggregation Services Routers SIP and SPA Software Configuration Guide* for configuration instructions.

- If a SIP or SPA is replaced with a module of the same type (as in an OIR or hardware swap), the previous configuration will be reinstated when the SIP or SPA becomes active.
- If a SIP or SPA has not been previously installed in the same slot or subslot, then the configuration for all associated interfaces will be empty.

Note New interfaces are not available until you configure them.

Step 2 If the SIPs and SPAs have not become active within three minutes, refer to the system console messages as follows:

- If a SIP or SPA is undergoing a field-programmable device (FPD) upgrade, then console messages will indicate that the FPD process has been initiated. The upgrade process might take several minutes. Use the **show upgrade fpd progress** command to obtain information about the FPD process. SIPs or SPAs that undergo an FPD upgrade will automatically be rebooted. Return to Step 1.
- If there is no indication that an FPD upgrade is under way, see Chapter 7, "Troubleshooting the Installation."

Using show Commands to Verify SIP and SPA Status

The following procedure uses **show** commands to verify that the new SPAs are configured and operating correctly.

Step 1 Use the **show running-config** command to display the system configuration. Verify that the configuration includes the new SPA interfaces.

Step 2 Display all of the current SPAs and a summary of their status using the **show hw-module subslot all oir** command.

Step 3 Display information about the installed SIPs using the **show diag** command.

Step 4 Use the **show hw-module subslot all fpd** command to verify the FPD version information of the SPAs installed in the system.

Note If a SPA does not meet the minimum FPD version required, it will be updated automatically. If the update fails, the failing SPA will be powered down and an error message will be reported on the system console.

For more information about FPD upgrades, refer to the "Upgrading Field-Programmable Devices" chapter of the *Cisco ASR 1000 Series Aggregation Services Routers SIP and SPA Software Configuration Guide*.

Step 5 Use the **show version** command to obtain a few details on the installed SIPs and interfaces.

Using show Commands to Display SPA Information

Table 6-1 describes the **show** commands you can use to display SPA information.

Table 6-1 show Commands to Display SPA Information

Command	Type of Information Provided
show controllers *type slot/subslot/port*	Network link status, register contents, and controller chip errors.
show diag	SPA type in that slot, number of ports, hardware revision, part number, and EEPROM contents.
show hw-module subslot all fpd	FPD version information of SPAs in the system.
show hw-module subslot all oir	The operational status of all SPAs in the system.
show interfaces *type slot/subslot/port*	Line status and data link protocol status for a particular SPA port. Statistics about data traffic sent and received by the port.
show platform	Information about the router. Provides operational status of a SIP or SPA.
show running-config	The router's running configuration and interfaces available in the system.
show version	Cisco IOS software version, names and sources of configuration files, and boot images.

SPA Blank Filler Plates

SPA blank filler plates are available to fill an unused SPA subslot.

When a SPA subslot is not in use, a SPA blank filler plate must be installed in the empty subslot to allow the router or switch to conform to electromagnetic interference (EMI) emissions requirements and to allow proper airflow across the SPAs. If you plan to install a new SPA in a subslot that is not in use, you must first remove the SPA blank filler plate.

SPA Cable-Management Brackets

SPAs are shipped with an accessory kit that includes cable-management brackets. Figure 6-3 shows cable-management brackets installed in a SPA, as well as cable routing.

Figure 6-3 SPA Cable-Management Brackets

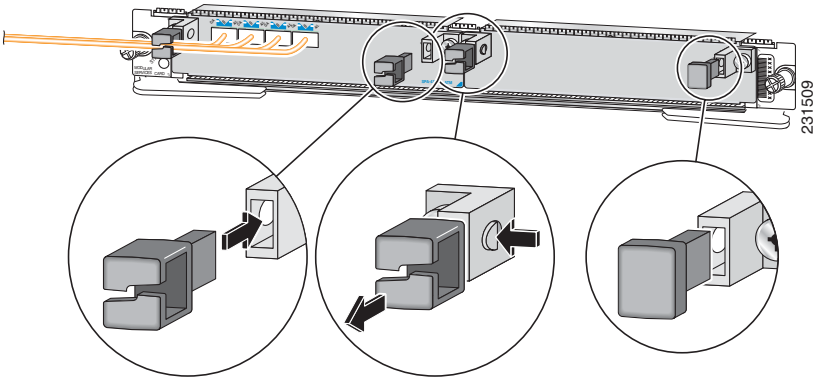

To install cable-management brackets on a SPA, perform the following steps:

Step 1 Screw the two pull assemblies into both sides of the SPA.

Step 2 Insert the cable-management bracket into the slot.

Step 3 To remove the cable-management bracket, depress the button on the bracket and pull it out.

Note Blank filler plugs are provided if no cable-management brackets are installed.

CHAPTER 7

Troubleshooting the Installation

This chapter describes how to troubleshoot the installation of SIPs and SPAs on the Cisco ASR 1000 Series Aggregation Services Routers. This chapter contains the following sections:

- Troubleshooting, page 7-1
- Using debug Commands, page 7-2
- Packing a SPA for Shipment, page 7-3
- Packing a SIP for Shipment, page 7-5

Troubleshooting

This section describes troubleshooting the installation of the SIPs and SPAs. Possible problems, observations and comments, and solutions are indicated for the following troubleshooting symptoms:

- SIP transitions repeatedly from on to off
- SIP is deactivated

SIP Transitions Repeatedly from On to Off		
Possible Problem	**Observations and Comments**	**Solutions**
SIP is booting up; this is normal operation	SIP STATUS LED alternates green, amber, or off	Wait 30 seconds until the boot process completes and the STATUS LED stays on.
SIP does not go beyond the bootup stage	SIP STATUS LED transitions continue and alternates green, amber, or off	Follow the recommended action for the displayed error message.

SIP Is Deactivated		
Possible Problem	**Observations and Comments**	**Solutions**
SPA is not fully seated in the SIP	Output of the **show diag** *slot* command SPA STATUS LED is off	Follow this procedure: • Remove the SPA from the SIP. • Inspect the SIP and the SPA. Verify there are no bent pins or parts and that there is nothing lodged in the two devices that could prevent a good connection. • Insert the SPA in the SIP by sliding the SPA all the way into the SIP until the SPA is firmly seated in the SPA interface connector. When fully seated in the SIP, the SPA might be slightly behind the SIP faceplate.
SPA is not supported on the SIP	Error message indicating the SPA is not supported Output of the **show diag** *slot* command SIP STATUS LED is off	Install a SPA supported on the SIP.
SPA is not at the minimum hardware revision level	Error message indicating the SPA is not at the minimum FPGA revision level Output of the **show hw-module subslot fpd** command Output of the **show diag** *slot* command SPA STATUS LED is off	Follow the FPD upgrade process to update the FPGA. For more information about performing FPD upgrades, refer to the "Upgrading Field-Programmable Devices" chapter in the *Cisco ASR 1000 Series Aggregation Services Routers SIP and SPA Software Configuration Guide*.
SPA is misconfigured		Refer to the configuration section of the SPA installation and configuration guide. Also, refer to the Cisco IOS software configuration documentation listed in the "Related Documentation" section on page viii.

Using debug Commands

The **debug hw-module subslot** command is intended for use by Cisco technical support personnel. For more information about the **debug hw-module subslot** command, see the *Cisco ASR 1000 Series Aggregation Services Routers SIP and SPA Software Configuration Guide*.

Caution Because debugging output is assigned high priority in the CPU process, it can render the system unusable. For this reason, use **debug** commands only to troubleshoot specific problems or during troubleshooting sessions with Cisco technical support staff. Moreover, it is best to use **debug** commands during periods of lower network traffic and fewer users. Debugging during these periods decreases the likelihood that increased **debug** command processing overhead will affect system use.

Packing a SPA for Shipment

This section provides step-by-step instructions for packing a SPA for shipment. Before beginning this procedure, you should have the following original Cisco packaging materials:

- Clamshell inner container
- Foam cushion (2)
- Exterior carton

Note For information on removing a SPA, see the "SPA Installation and Removal" section on page 6-2.

Caution The Cisco original packaging is to be used for the shipment of all SPAs and cable-management brackets. Failure to properly use Cisco packaging can result in damage or loss of a product.

Caution During this procedure, wear grounding wrist straps to avoid ESD damage to the card.

See Preventing Electrostatic Discharge Damage, page 4-8 for information about preventing ESD.

Note These instructions assume that the SPA and cable-management brackets have been removed from the router according to the recommended procedures specified in this guide.

To pack a SPA for shipment, see Figure 7-1 and perform the following steps:

Step 1 Open the clamshell container and place the SPA into the appropriate cavity.

Caution Always handle the SPA by the carrier edges and handle; never touch the SPA components or connector pins.

Step 2 Close the clamshell container.

Step 3 Check that the clamshell container is fully closed. Apply tape or a label closure over the opening to ensure that the container stays closed during shipping.

Step 4 Place one foam cushion in the bottom of the exterior carton.

Step 5 Place the clamshell container into the carton on top of the foam.

Step 6 Place the second foam cushion on top of the clamshell.

Step 7 Close the exterior carton.

Step 8 Apply tape over the exterior carton flap to ensure that the carton stays closed during shipping.

Figure 7-1 Packing a SPA for Shipment

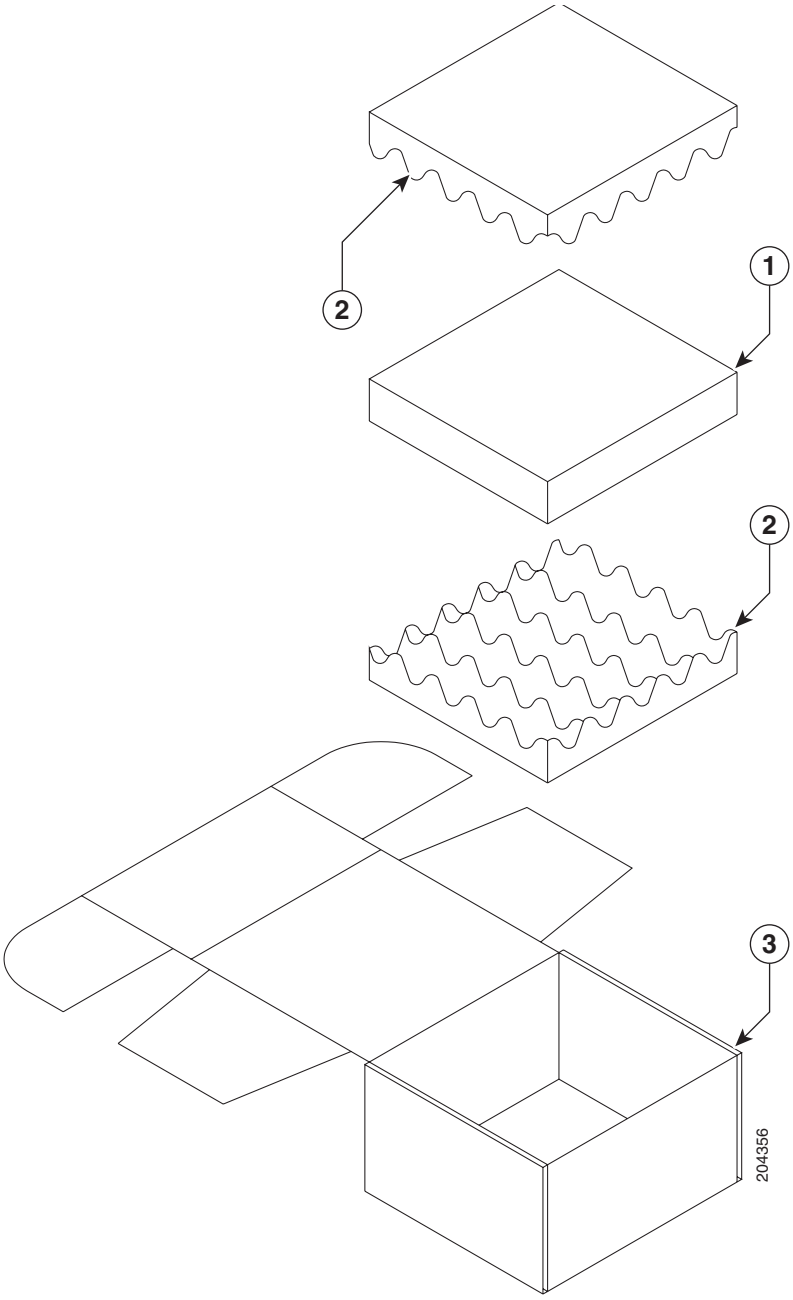

1	Clamshell	**2**	Cushion foam
3	Exterior carton		

Packing a SIP for Shipment

This section provides step-by-step instructions for packing a SIP for shipment. Before beginning this procedure, you should have the following original Cisco packaging materials:

- Static shielding bag
- Corrugated spacer
- Bottom support
- Smaller inner carton
- Two foam packing cushions
- Larger exterior carton

Note For information on removing a SIP, see the "SIP Installation and Removal" section on page 5-8.

Caution The Cisco original packaging is to be used for the shipment of all SIPs. Failure to properly use Cisco packaging can result in damage or loss of a product.

Caution During this procedure, wear grounding wrist straps to avoid ESD damage to the card.

See Preventing Electrostatic Discharge Damage, page 4-8 for information about preventing ESD.

Note These instructions assume that the SIP has been removed from the router according to the recommended procedures specified in this guide.

To pack a SIP for shipment, see Figure 7-2, and perform the following steps:

Step 1 Insert the SIP into the static shielding bag. (Not shown in diagram.)

Step 2 Place the bottom support into the smaller inner carton.

Step 3 Place the bagged SIP onto the bottom support.

Step 4 Place the corrugated spacer on top of the bagged SIP.

Step 5 Close the smaller inner carton and tape the sides closed.

Step 6 Place the sealed smaller inner carton containing the SIP into the two foam packing cushions (the carton only fits one way).

Step 7 Place the sealed smaller inner carton and packing cushions into the larger exterior carton, and seal the larger exterior carton with tape for shipment.

Figure 7-2 Packing a SIP for Shipment

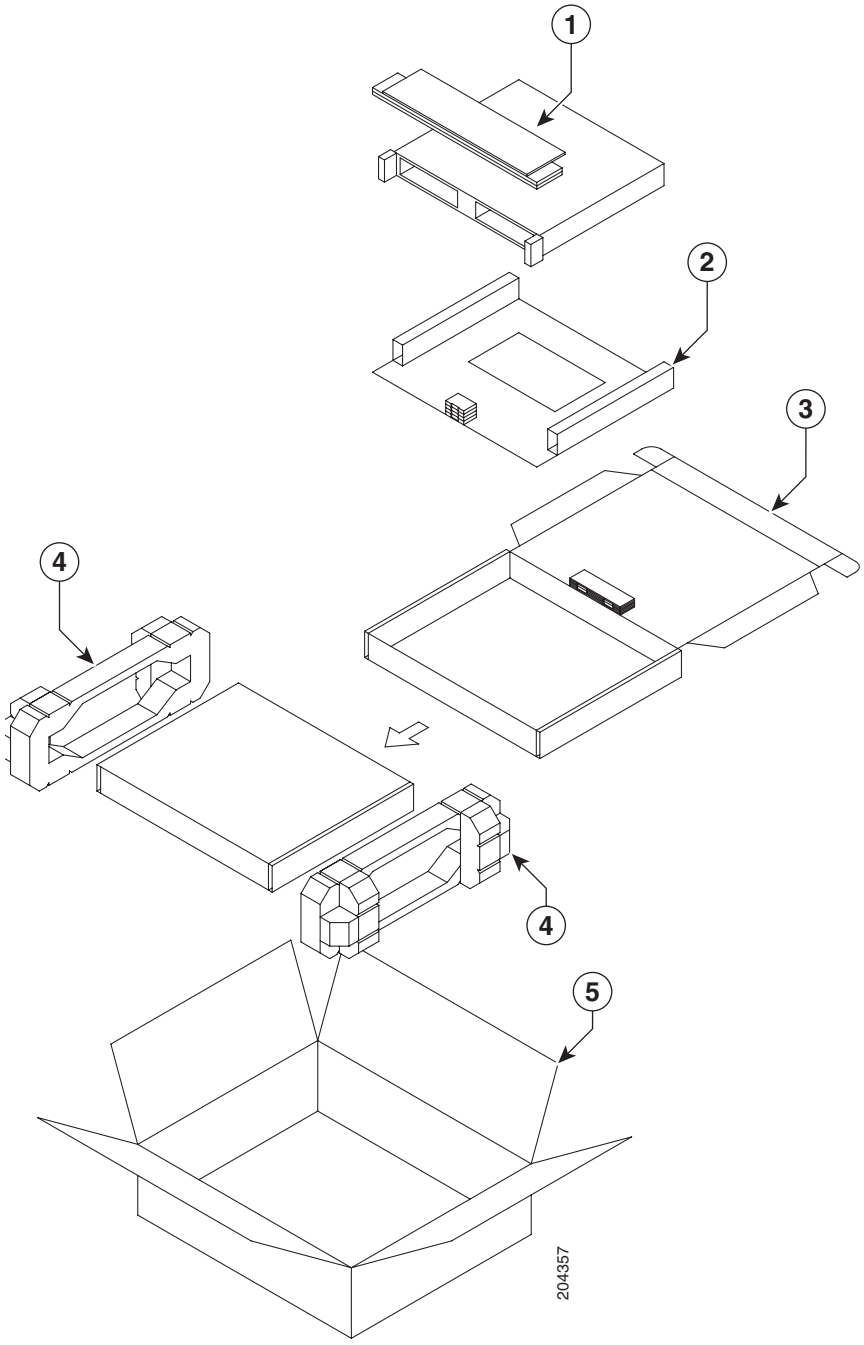

1	Corrugated spacer	**2**	Bottom support for inner carton
3	Inner carton	**4**	Foam packing cushions
5	Exterior carton		

REVIEW DRAFT—CISCO CONFIDENTIAL

INDEX

Numerics

10-Port Gigabit Ethernet SPA
- cables and connectors 3-25
- LEDs 3-24
- SFP module 3-25

1-Port 10-Gigabit Ethernet SPA
- cables and connectors 3-17
- XFP module 3-17, 3-18

1-Port Channelized STM-1/OC-3 SPA
- cables and connectors 3-13
- interface specifications 3-13
- LEDs 3-12

1-Port OC-12c/STM-4 POS SPA
- interface specifications 3-39
- LEDs 3-38
- optical transceiver modules and cables 3-39

2-Port and 4-Port Channelized T3 Serial SPA
- cables and connectors 3-5
- interface specifications 3-5
- LEDs 3-4

2-Port and 4-Port Clear Channel T3/E3 Serial SPA
- cables and connectors 3-3
- interface specifications 3-3
- LEDs 3-2

2-Port and 4-Port OC-3c/STM-1 POS SPA
- interface specifications 3-32
- LEDs 3-31
- optical transceiver modules and cables 3-32

2-Port and 4-Port OC-48c/STM-16 POS/RPR SPA
- cables, optical transceiver modules, connectors 3-36
- interface specifications 3-36
- LEDs 3-35

2-Port and 4-Port OC-48c/STM-16 POS/RPR SPA

2-Port Gigabit Ethernet SPA
- cables and connectors 3-20
- LEDs 3-19

4-Port and 8-Port Fast Ethernet SPA
- cables and connectors 3-15
- LEDs 3-14

4-Port Serial Interface SPA
- cables, connectors, pinouts 3-8
- interface specifications 3-7
- LEDs 3-6

5-Port Gigabit Ethernet SPA
- connectors 3-22
- LEDs 3-21

8-Port Channelized T1/E1 Serial SPA
- cables, connectors, pinouts 3-11
- interface specifications 3-11
- LEDs 3-10

8-Port Gigabit Ethernet SPA
- connectors 3-23
- LEDs 3-23
- SFP modules 3-23

A

activation
- verifying for SIPs 5-3
- verifying for SPAs 5-7

addresses
- for SPAs 2-2
- on SIPs 2-2

REVIEW DRAFT—CISCO CONFIDENTIAL

B

blank filler plate
- for empty subslots in a SIP 1-1
- single-height size 1-2

C

cable-management brackets 6-7
cleaning optical devices 6-4
course wave division multiplexer (CWDM)
- CWDM SFP modules 3-29
- Optics Compatibility 1-4
- optics compatibility 1-4
- qualified optics modules 1-4

D

deactivation
- verifying for SIPs 5-3
- verifying for SPAs 5-7

debug commands 7-2
dense wave division multiplexer (DWDM)
- DWDM SFP modules 3-29
- optics compatibility 1-5
- qualified optics modules 1-5

H

hw-module slot start command 5-8
hw-module slot stop command 5-2, 5-3
hw-module sublsot start | stop | reload command 5-3
hw-module subslot shutdown command 5-6, 5-7, 5-8

I

interface processor
- tools and parts required for installation 4-1

intermediate reach
- SFP optical transceiver module 3-32, 3-36, 3-39

L

LEDs on SIPs 2-5
long reach
- optical transceiver module 3-39
- SFP optical transceiver module 3-32, 3-36

M

multimode
- SFP optical transceiver module 3-32, 3-39

N

no hw-module subslot shutdown command 5-8

O

OC-12c/STM-4 POS SPA
- bandwidth 3-38
- cables 3-39, 3-40
- faceplate (figure) 3-38
- interface specifications 3-39
- LEDs 3-38
  - (figure) 3-38
  - descriptions (table) 3-38
- optical transceiver modules 3-39

OC-12 module connections 3-41
OC-3c/STM-1 POS SPA
- bandwidth 3-31
- cables 3-32, 3-33
- connectors 3-32
- faceplate (figure) 3-31
- interface specifications 3-32
- LEDs 3-31

REVIEW DRAFT—CISCO CONFIDENTIAL

optics 3-32
OC-3 module connections 3-34
OC-48c/STM-16 POS/RPR SPA
cables and connectors 3-36
OC-48 module connections 3-37
OC-48 specifications 3-37
OIR (online insertion and removal)
for SIPs 1-1, 5-2
for SPAs 1-2, 5-4, 6-4
optical device cleaning 6-4
optical transceivers
for OC-3c/STM-1 POS SPA 3-32
for OC-48c/STM-16 POS/RPR SPA 3-36
optics modules
qualified for SPAs (table) 1-4, 1-5, 1-6

P

packing
a SIP for shipment 7-3
a SPA for shipment 7-3

R

RFC 1155, *Structure and Identification of Management Information for TCP/IP-based Internets* 3-39
RFC 1156, *Management Information Base for Network Management of TCP/IP-Based Internets* 3-39
RFC 1157, *Simple Network Management Protocol (SNMP)* 3-39
RFC 1213, *Management Information Base (MIB) for Network Management of TCP/IP-Based Internets* 3-39
RFC 1619, *PPP over SONET/SDH* 3-39
RFC 1662, *PPP in HDLC-like Framing* 3-39
RFC 2615, *PPP over SONET/SDH* 3-32

S

safety guidelines 4-1
SFP (small form-factor pluggable) optics
(figure) 3-33, 3-40
2-Port Gigabit Ethernet SPA 3-20
Cisco qualification check 1-3
for OC-12c/STM-4 POS SPA 3-38, 3-39
for OC-3c/STM-1 POS SPA 3-31, 3-32
for OC-48c/STM-16 POS/RPR SPA 3-36
qualified for SPAs (table) 1-4, 1-5, 1-6
SFP-GE-x 3-26
SFP module 3-25
SFP-OC12-xx 3-39
SFP-OC3-xx 3-32
SFP-OC48-xx 3-36
shipment
packing a SIP for 7-3
packing a SPA for 7-3
short reach
SFP optical transceiver module 3-32, 3-39
XFP optical transceiver module 3-36
show diag command 2-3
show diag subslot command 2-3
show hw-module subslot all oir command 5-7
show ip interface command 5-7
show module command 5-3
show platform command 2-3
SIP (SPA interface processor)
activation (example) 5-8
blank filler plates 1-1
chassis slot installation (figure) 2-3
deactivating 5-3
deactivation (example) 5-7
definition 1-1
general characteristics 1-1
handling 5-1
install 5-8
physical specifications 2-6
reactivating 5-3
removal 5-2, 5-8
SPA compatibility (table) 1-2, 1-3
subslots

REVIEW DRAFT—CISCO CONFIDENTIAL

description 1-1
numbering 2-4
specifying location in CLI 2-4
SPA (shared port adapter)
activation (example) 5-8
cable-management brackets 6-7
deactivating 5-5
deactivation (example) 5-8
definition 1-2
handling 6-1
installing 6-3
interfaces 1-2
optics compatibility (table) 1-4, 1-5, 1-6
reactivating 5-6
removal 5-4, 6-1
single-height description 1-2
SIP compatibility (table) 1-2, 1-3
subslot numbering (figure) 2-3
SPA interface processors (SIPs) 2-1
subslots
description 1-1
numbering 2-4
specifying location in CLI 2-4

T

troubleshooting the installation 7-1

U

using show commands
to verify SIP and SPA status 6-5

X

XFP-10GER-OC192IR 3-17
XFP-10GLR-OC192SR 3-17
XFP-10GZR-OC192LR 3-17
XFP module 3-18
cabling 3-19
intermediate-reach 3-17
short-reach 3-17
very-long-reach 3-17