legrand®

SUPERIOR ESSEX®

CASE STUDY

Lighting the Way for Innovation at Launch Fishers with Digital Ceiling PoE LED Solutions.

Platformatics™

cisco Preferred Solution Partner

/ CUSTOMER /

Fishers, Indiana is an entrepreneurial city geared for economic development and already home to many successful new and innovative companies. Working with entrepreneur and founder, John Wechsler, the town developed "Launch Fishers," a facility designed to serve the unique needs of entrepreneurs working to start and build high-potential enterprises in health, information, life sciences, biotech, consumer's products, agri-tech and other fast growing technologies.

Launch Fishers is a 52,000 square foot building which is located in the Northeast Commerce Park. Here, its members can take advantage of a variety of co-working office spaces ranging from couches to treadmill desks, a full service coffee shop, rentable conference spaces and meeting rooms of various sizes.

To create the kind of environment conducive to entrepreneurial spirit, and to foster innovative teamwork and creative thinking, the Launch Fishers facility created an open office with a collaborative feel to the workspaces. However, the need for new high tech amenities such as occupancy sensors, advanced LED lighting and high speed data communications infrastructure was evident.

"It was imperative for us to offer our tenants a work environment that not only offered a higher level of efficiency in terms of building systems management, but also promoted the productivity and positive, innovative thinking we associate with our entrepreneurs."

// John Wechsler, CEO of Launch Fishers

Installing Platformatics lighting and Superior Essex PowerWise CAT 5e+ cabling in ceiling of the Launch Fishers facility. When complete, this Digital Ceiling solution will feature Platformatics LED lights, troffers and sensors, powered and controlled by Cisco 3850 Catalyst switches, Superior Essex PowerWise Cat 5e+ cable, and Legrand HDJ patch panels and connectivity components.

/ INSTALL /

In an effort to improve operational efficiency as well as overall tenant experience, Launch Fishers set out to transform 10,000 square feet of space into a large work area with 26 conference rooms, each of which could be tailored to meet the needs of existing or future occupants, and adapt to future changes in the office structure. A major component of this transformation was the overhaul of its lighting infrastructure, or "re-lamping". At the time, Launch Fishers employed traditional florescent lighting systems. However, these lighting systems were fixed, and could not be easily reconfigured to accommodate the demands of new office spaces. Furthermore, the florescent lighting systems did not allow for any type of monitoring or control by building managers, and were a constant source of eye-strain for its tenants, which in turn had a negative impact on the tenant experience.

"It was imperative for us to offer our tenants a work environment that not only offered a higher level of efficiency in terms of building systems management, but also promoted the productivity and positive, innovative thinking we associate with our entrepreneurs," says John Wechsler, CEO of Launch Fishers. "We saw lighting as one major area in which we could significantly improve these aspects of the work space and add significant value to our tenant experience."

To meet these goals, Launch Fishers sought the expertise of Platformatics, a local Indiana company that specializes in providing intelligent Power-over-Ethernet (PoE) lighting solutions. "The Launch Fishers facility was a great opportunity for us to showcase the variety of benefits that our PoE lighting solutions can offer to both

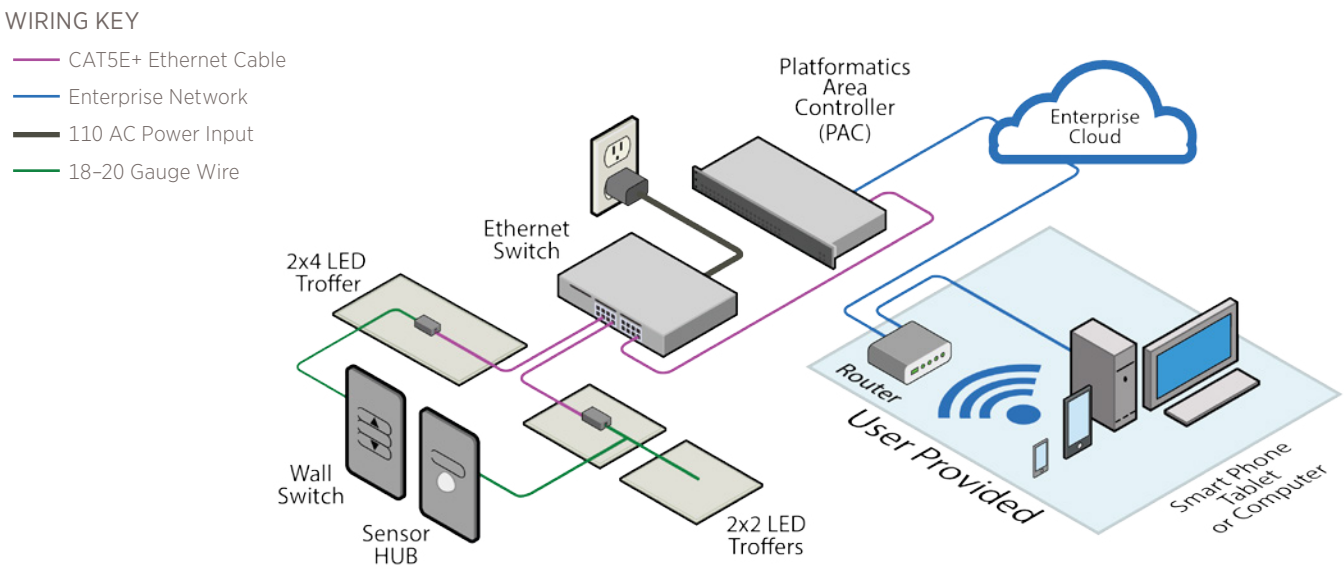

"For Launch Fishers, we were able to devise a PoE lighting solution that would help them increase their operational efficiency by giving them more control of their lighting network, as well as improve the overall quality of light throughout the work space."

// Matt Laherty, President of Platformatics

facilities managers and tenants," says Matt Laherty, president of Platformatics. "For Launch Fishers, we were able to devise a PoE lighting solution that would help them increase their operational efficiency by giving them more control of their lighting network, as well as improve the overall quality of light throughout the work space."

The retrofit took a phased approach, with the initial phase outfitting 10,000 square feet of space with PoE lighting solutions while also future-proofing the installation for additional lighting systems and other PoE technologies. In addition to supplying LED lights, light fixtures or "troffers," and Area Controllers, Platformatics also provided its sophisticated software platform, which enables in-depth control over its lighting systems. Having worked with Cisco products on many of its previous design builds, Platformatics proposed a Cisco Digital Ceiling framework utilizing Cisco Catalyst 3850 Series switches as the networking backbone. A Cisco Digital Ceiling framework converges different building systems such as climate, security, and lighting onto a single IP network in order to improve productivity, safety, and occupant experience. As partners in the Digital Ceiling framework, Superior Essex joined the team to supply its PowerWise™ CAT 5e+ cable, which it designed specifically for high power PoE applications such as LED lighting. With Superior Essex providing the cable, its connectivity partner, Legrand also a partner of the Digital Ceiling framework, supplied the connectivity components, including HDJ series angled patch panels, CAT 5e jacks, and 2-port surface mount boxes. Together, this team provided a Digital Ceiling with PoE LED lighting for Launch Fishers, paving the way for a sophisticated converged power, light and data network.

/ SOLUTION /

Telecommunications closet during installation, featuring Cisco Catalyst 3850 switches, Legrand's 24 and 48-port HDJ series angled patch panels, CAT 5e+ Jacks and 2-port surface mount boxes and Superior Essex PowerWise CAT 5e+ cable.

The Digital Ceiling solution set offers a variety of advantages for the tenants and facilities managers of Launch Fishers. Platformatics' LED lights provide twice the light from the same occupied ceiling space, yet only require one-third of the power compared to traditional lighting. Utilizing Platformatics' unique Area Controller and software interface, lights are tunable, and can be adjusted for color and intensity from 2700K (Kelvin) to 5000K by remote control in each zone of the work space. This tunable color creates a customizable user experience, and a more productive and pleasing environment for tenants. Unlike traditional florescent lights that emit a limited spectrum of flickering light, LEDs offer a full, rich spectrum of color, reducing eye strain for tenants. The ability to control the activation and brightness of lighting systems in individual office spaces also allows building managers to monitor and track system usage and provide power to those systems on an as-needed basis, eliminating unnecessary power usage. In addition, wall switches and a sensor hub, which converges temperature, occupancy and day lighting harvesting into one, are all integrally hardwired to the system. When combined, these features result in a significant increase in energy efficiency and reduction in operating costs.

Cisco 3850 PoE switches

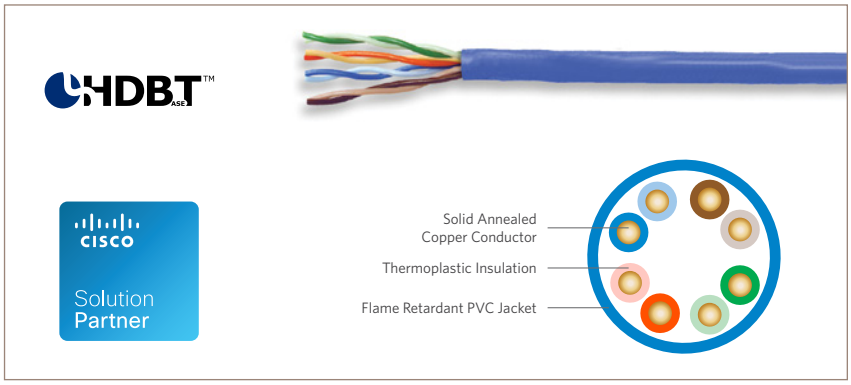

Superior Essex PowerWise™ CAT 5e+ Cable

Platformatics LED lighting systems were installed in the ceilings with Cisco's Catalyst 3850 Series Switches used to power and connect the lights. By enabling PoE transmission with Catalyst 3850 switches, the integrator was no longer required to pull two cables — one for power and the other for data — to power and control the lighting systems. Since the power is all supplied by low voltage PoE, the data communications system integrator performed the on-site installation of the communications equipment as well as the lighting system. This greatly reduced the cost of installation by totally eliminating the need for a cable dedicated to supplying direct AC power, as well as the need for a separate electrical contractor. Offering additional levels of security to both the system and the environment, Cisco's Catalyst switches enable Launch Fishers to use the network as a sensor and enforcer against security threats, and also maintain a fast reboot back up feature for the PoE power supply in case of power mains outages. New developments for the lighting system will soon include a battery backup at the LED troffers, called "Maintained Light," as well as a security lighting system for emergency situations in the building.

Superior Essex provided 10,000 feet of its PowerWise™ CAT 5e+ copper cables to connect from the switches to the lights. PowerWise CAT 5e+ 4-Pair Power-over-Ethernet (4PPoE) cable was designed to meet the high power and data demands of PoE applications. Utilizing 22 AWG copper conductors, PowerWise CAT 5e+ delivers the necessary 60W Watts of power to support LED lights with 97 percent power efficiency, while also supporting one gigabit data transmission. In ceilings spaces with hundreds of LEDs, this unparalleled power efficiency can yield an energy savings of thousands of kilowatt hours per year, which translates to thousands of dollars in saved utilities costs. Additionally, PowerWise CAT 5e+ cable maintains the lowest temperature rise in large cable bundles, ensuring reliable power and data transmission in high-density installations and further improving system energy efficiency. In order to support Launch Fishers in its efforts to promote a clean, thriving community, PowerWise CAT 5e+ cable was manufactured utilizing sustainable processes in a Zero Waste to Landfill facility, and maintains a limited environmental impact over the course of its life cycle.

Legrand HD series Patch Panels, Ceiling Box and HDJ jack

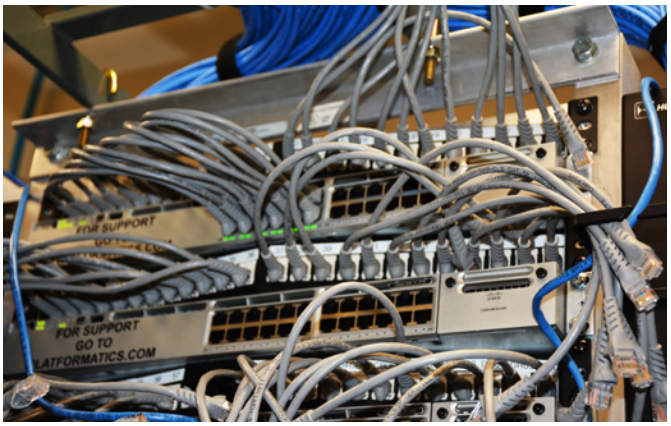

Cisco 3850 Switches are cross connected to Legrand HD Patch Panel as a part of the structured cabling that enables the lighting network.

Platformatics' Lighting Switch allow tenants and facility managers to control the power and intensity of overhead LED lights from the floor.

LED Troffer

Computers hooked up to the Platforamtics' area controller allow users in-depth control of the lighting in each section of the building.

Interconnecting the switches and the ceiling lights are Legrand's 24- and 48-port HDJ series angled patch panels, CAT 5e Jacks and two-port surface mount boxes. The Legrand HDJ patch panels offer hybrid modularity and connection flexibility for quick and easy insertions into a high density patch panel footprint. More importantly, the jacks are designed with additional power and data "headroom" to support the distributed power demands for the LED lights, while at the same time assuring up to one gigabit per second error-free data connections. In order to eliminate potential degradation over time due to arcing when un-mating a jack-plug connection, Legrand has designed its jack with thicker plating (50 micro inches) and a protected contact area in the full mated position. By locating the last point of contact away from the mated RJ-45 connection, the jacks protect the critical area from spark gap erosion, extending the life and performance of the connection. In addition, the jacks' PC board paired traces have a minimum current carrying capacity of one amp. Legrand's connectivity provides more than an additional amp of headroom for superior PoE performance.

/ CONCLUSION /

The demands on future buildings will continue to require the need for more advanced, converged power, lighting and data solutions. These demands include the support of high speed data communications, lighting and power delivery through a sophisticated network infrastructure for its occupants. Launch Fishers' move to adopt the innovative Digital Ceiling is an example of how companies work together to enable an effective solution to meet those needs.