RPHY Video Overview

Sept 20, 2017

Cisco Remote PHY Overview

Remote PHY Architecture

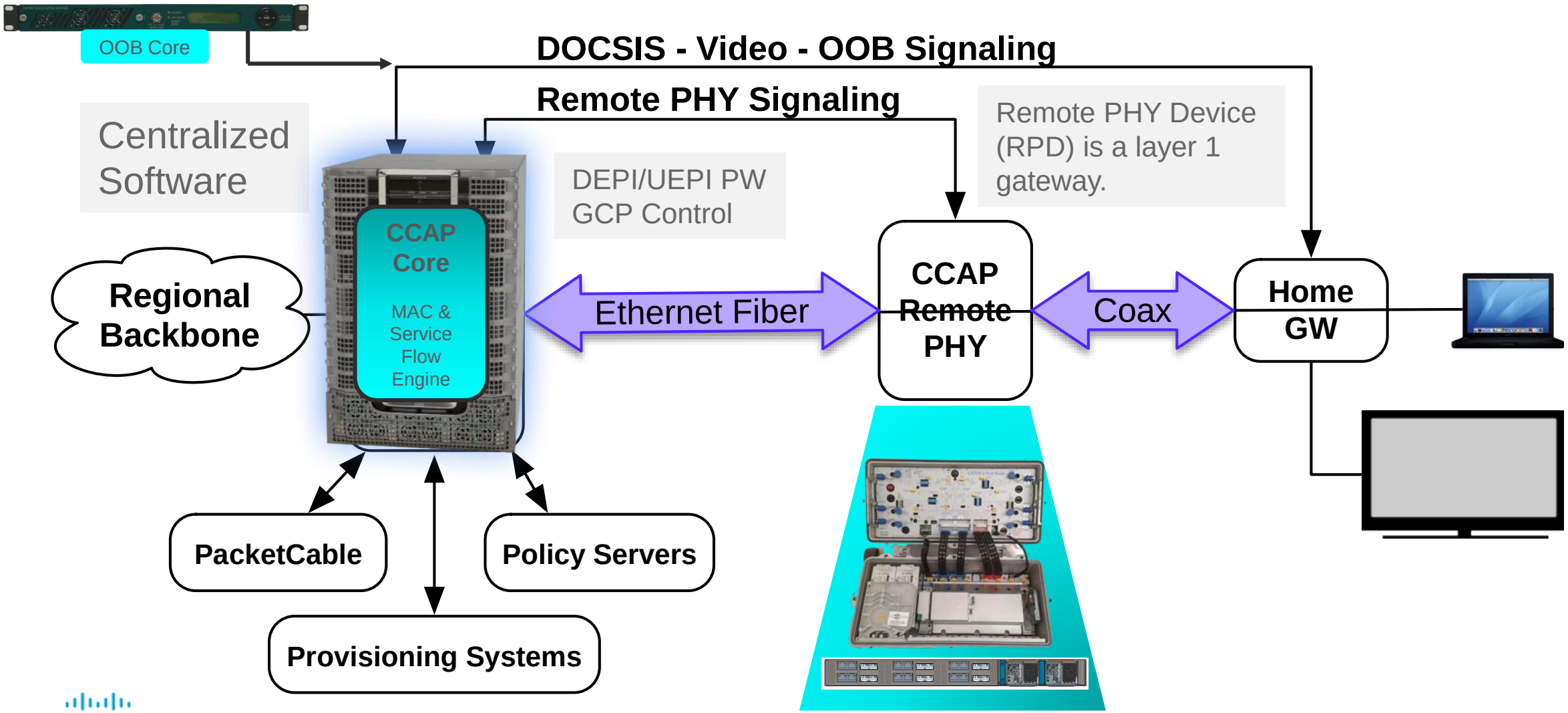

Cisco’s Leadership in Remote PHY

The **only** DAA Standard in existence

- First and only company to develop Modular CCAP using DEPI
- First company to deploy UEPI for pre-standard R-PHY in China
- Led the Standards effort to write the R-PHY Specifications
- First company to submit R-PHY Code for the RPD to Open Source
- The **first** Company to bring Remote Phy Standards Compliant CMTS Core and RPD to market

RPHY Enables Distributed CCAP Core

- Remote PHY distributes DOCSIS/Video PHY across Hubs & Nodes
  - CCAP RPHY Core is not physically tied to the Hub anymore
  - Only requirement is IP Connectivity between RPD and RPHY Core
- Remote PHY also provides the foundation for a virtualized Cloud Native CMTS

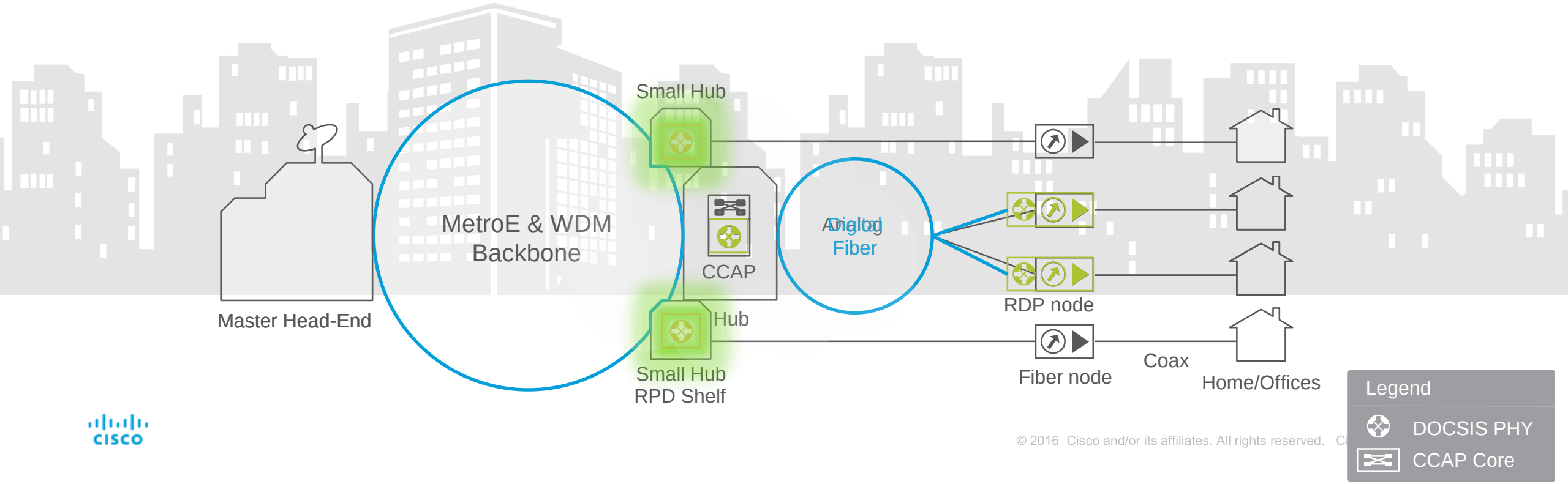

Migration to Cloud Native CMTS

- Cloud Native CMTS provides agile, elastic and on-demand capacity
- Scales subscribers and bandwidth without adding space and power in the Hubs
- CCAP RPHY Core and Cloud Native CMTS can co-exist – the choice is a business decision

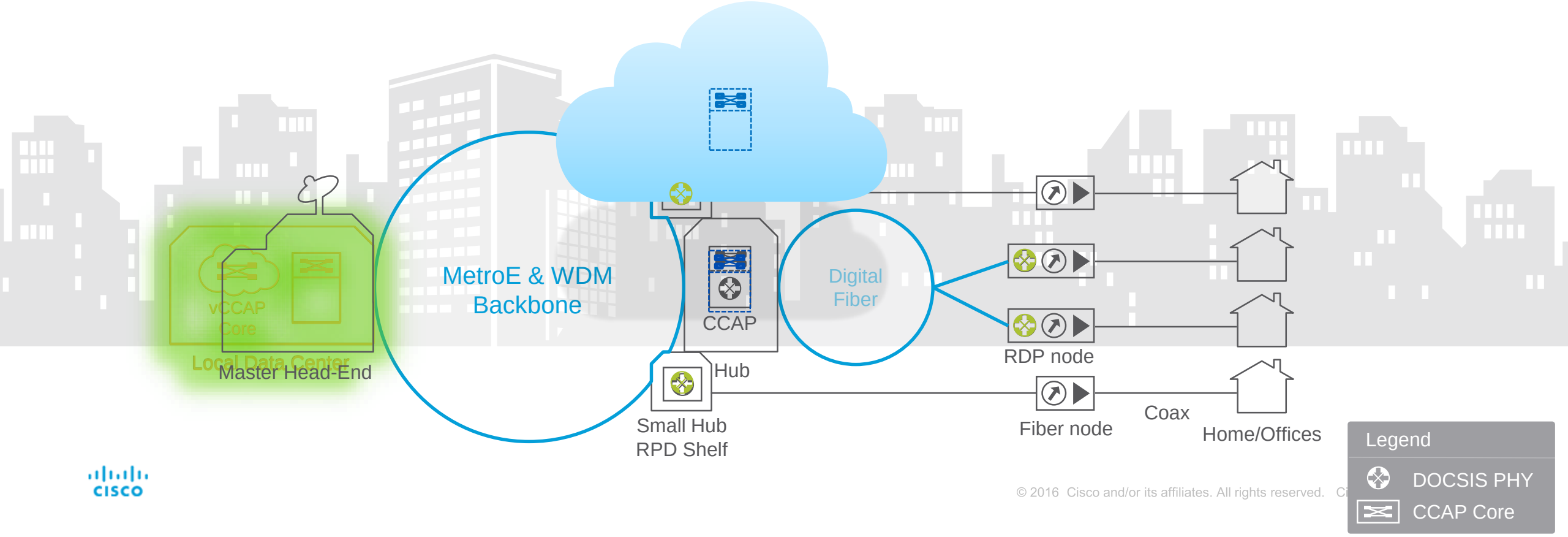

cBR-8 Demonstrated Success

Best Platform in the Industry…and Getting Better Every Day

- Most scalable platform on the market
- No new hardware required to support D3.1 or Video
  - Simple DPIC swap to enable RPHY
- DOCSIS 3.1
  - Downstream software shipping, filling out feature set
  - Upstream software shipping since July 2017
- Converged Video in deployment at multiple customers
  - PowerKEY, PME, and DVB Simulcrypt VOD, SDV, pre-encrypted Broadcast shipping
- Vastly improved resiliency and HA capability
  - Patchability, Restartability and ISSU

Cisco Remote PHY Solution

- Open Standards and Open Source RPD Software
- cBR-8 Core Software
- Remote PHY Device (RPD) for GS-7000
- RPD Vendor Ecosystem
- Remote PHY Shelves
- Virtual CMTS (vCMTS) with orchestration

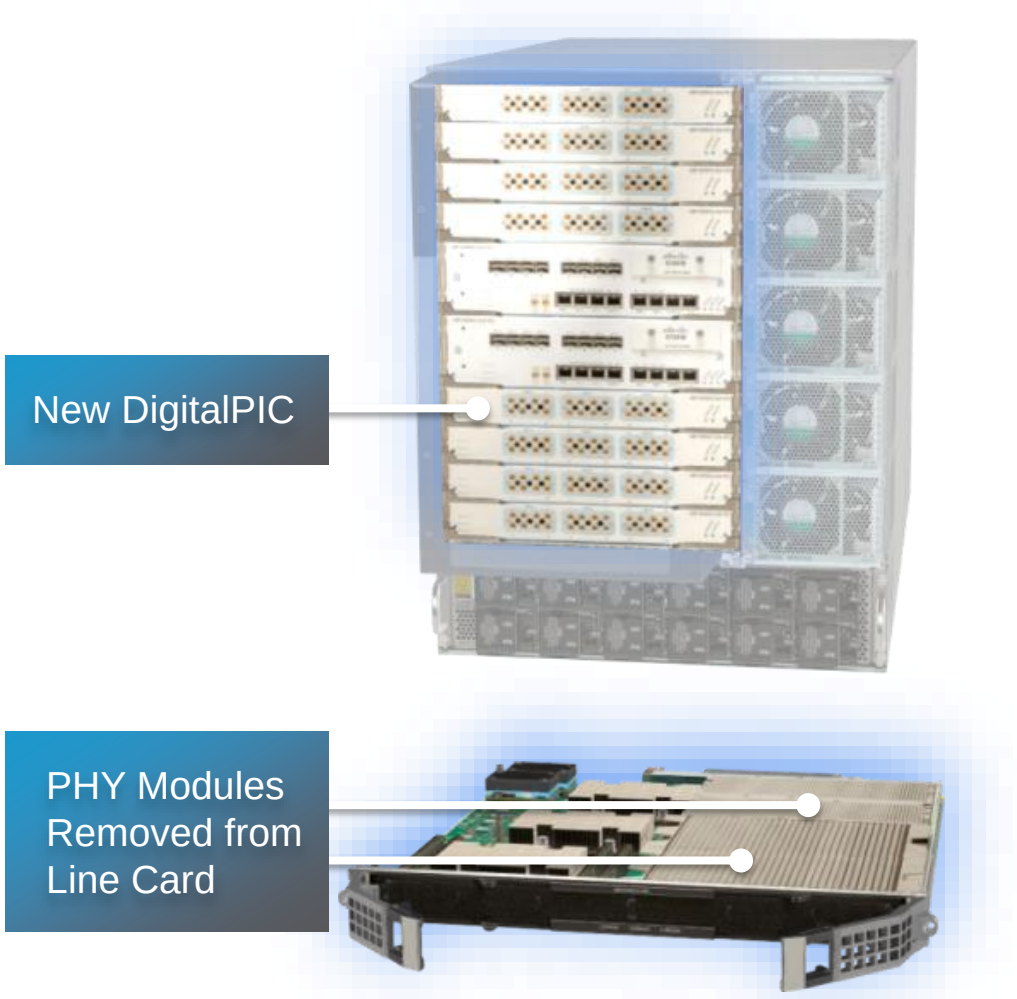

cBR-8 Core and Remote PHY Module

Evolving Cable SP Network Architectures

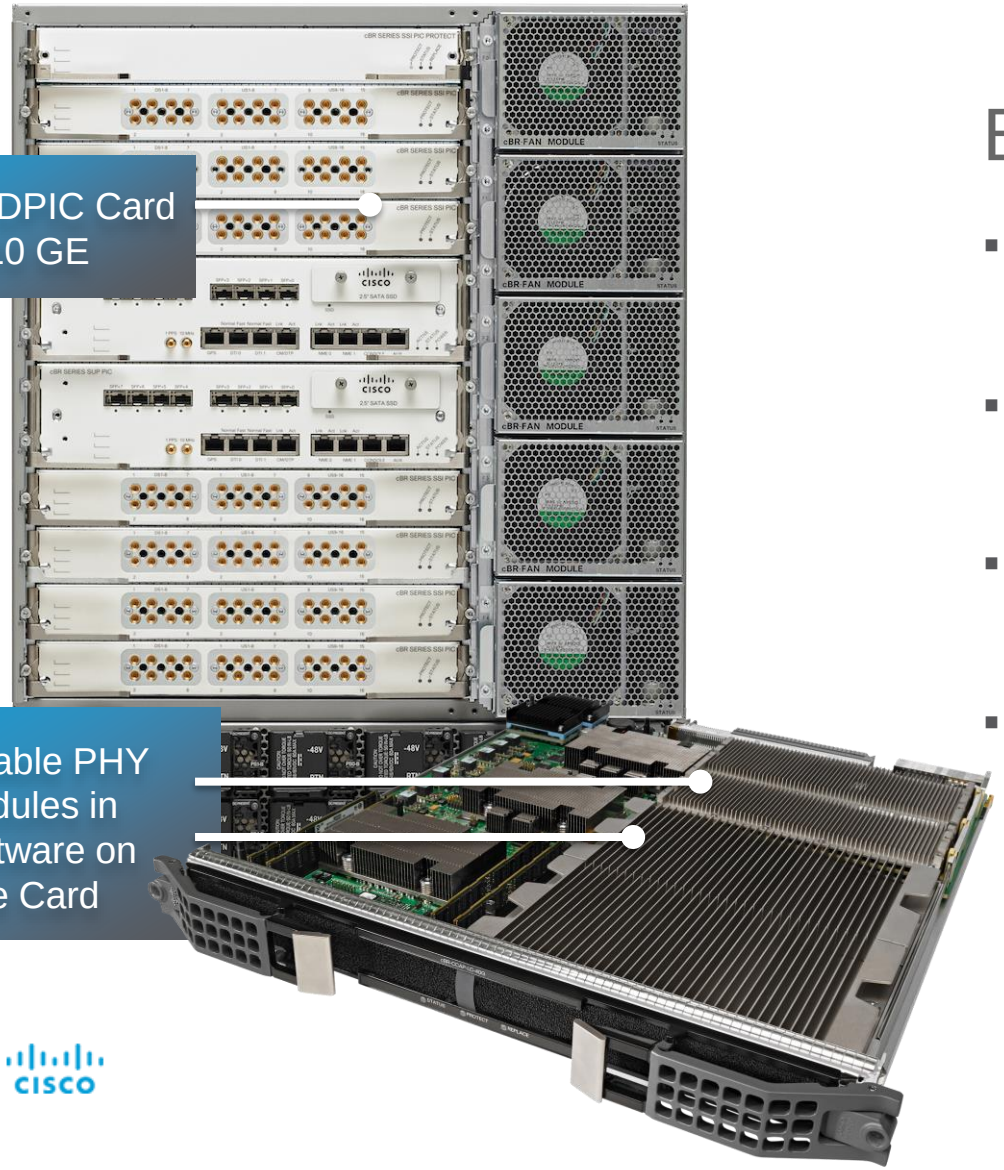

Benefits

- Scaling service groups beyond the port capacity of the traditional CMTS
- Decoupling the scaling from dependency on the integrated PHY ports
- Allowing Digital Fiber / Ethernet to be driven deeper into the network
- Enabling migration to a Cloud-centric ecosystem focused on service velocity and value creation

cBR-8 Digital PIC

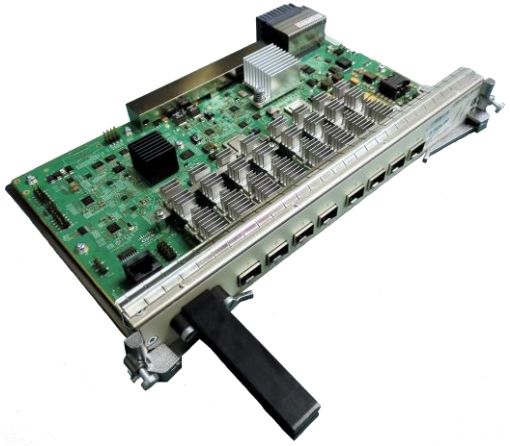

- Replaces RF PIC for R-PHY applications
- Provides digital connectivity to CCAP line card via midplane
- Works with existing 40G CCAP Line Card and Supervisor
- 8x10G SFP+ per DPIC with 40G+40G
  - Dedicated links to CIN (separate from WAN links)
  - Up to 4 active links to CIN
  - Up to 4 redundant links to CIN (optional)
- Designed to work with 40G and 80G CCAP Line Card
  - Up to 4 active links to CIN
  - Up to 4 redundant links to CIN (optional)
- Used with active and standby CCAP Line Card (no Protect DPIC)
  - All DPICs in cBR-8 are connected to CIN
  - For LC failover, switching performed in CIN
- All ports support R-DTI spec

Cisco’s RPD Product Family

GS7000 RPD	Compact Shelf	High Density Shelf
• 1x1, 1x2 Deep Fiber • 2x2 BAU	• 1RU 6x12 no HA. • Small hub	• 7RU 72SG 12+1 HA. • Medium to large hub

Why R-PHY in the Node?

- Enables Virtualization CCAP
- Enables Ethernet to the node which increase plant value.
- Enables sharing of plants for commercial and residential
- Enable sharing of HFC fiber with FTTH and PON.
- Enables hub site consolidation
- HFC becomes a full service IP network.
- Lower plant maintenance costs
- Lower optics costs (10G)
- Simpler fiber design rules.
- Multiple DOCSIS and Video SG per wavelength.
- More wavelengths
- Longer reach
- Higher bit-rate for D3.1
- Higher Scaling

Why R-PHY in the Shelf?

Consolidation of Small Hubs to leverage CMTS Capacity

1. Increased Hub Density
2. Lower Hub Power Consumption
3. Possible Lower CAPEX
4. Networkable Digital Fiber between hubs
5. Expands the number of ports on the CMTS by 2x – 4x
6. Leverages Linear Fiber from Headend or Data Center to Hub Hub to Node

Creates a path to virtualization

RPHY Video Considerations

Cisco cBR-8 : RPHY Core Capacity and Scalability

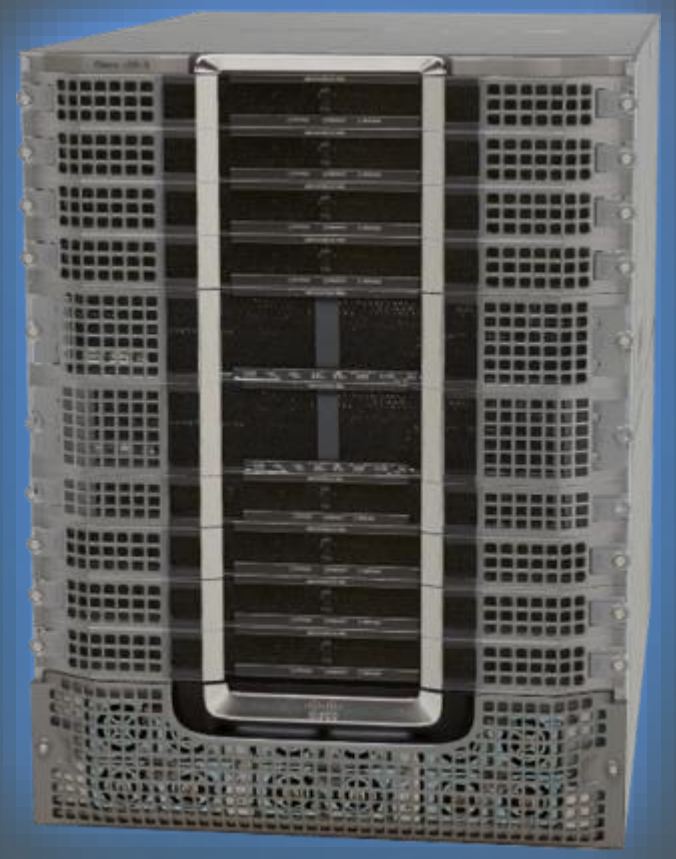

- Compact, high-density 13 RU chassis
- Delivers over 6000 downstream channels
  - DOCSIS 3.0, DOCSIS 3.1 at scale
  - Video (VOD, SDV, Broadcast)
- 128 Service Groups (112 with redundancy)
- Video Service Group Capacity (384 Video QAM/LC)
  - 24-32 narrowcast QAMs (VOD & SDV)
  - 64-96 broadcast QAMs
- Highly Scalable Control Plane (10-core CPU)
  - Designed for Session Based Encryption Loading
- Dedicated FPGA and CPU Resources for Video Processing

cBR-8 designed for ultimate scalability

Cisco cBR-8 : CCAP Video Features

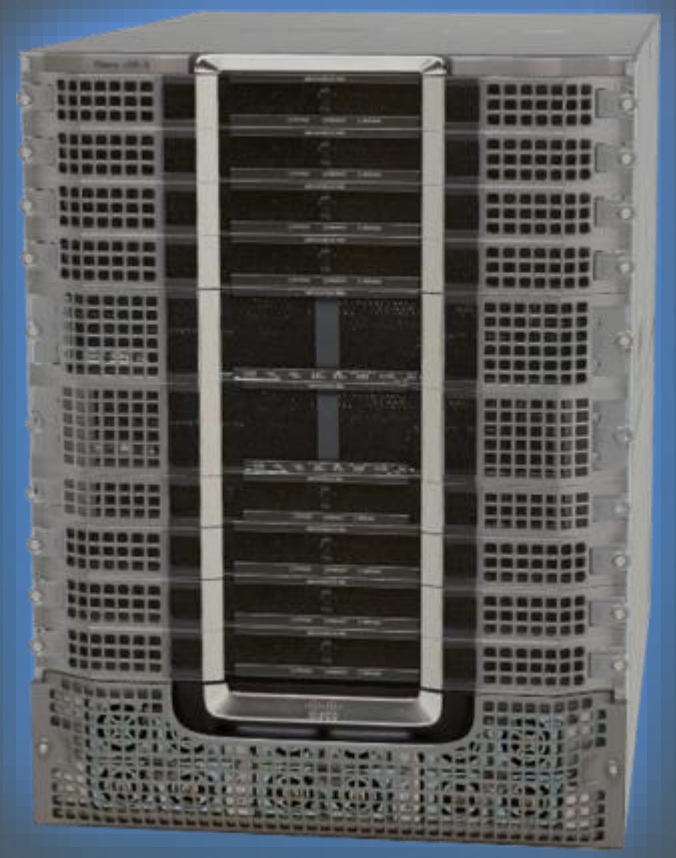

- High Availability Architecture
  - LCHA (Line Card HA)
  - Fully Redundant Supervisors 1+1 hitless failover (SSO)
  - LCHA and SSO transparent to Video Control System
  - Software Resiliency
  - Process Restart / Separation
- VOD, SDV and Pre-Encrypted Broadcast Services
- Static and Session Based Port Mappings
- Integrated PKEY, VPME and DVB Encryption
- QAM Replication

cBR-8 designed to support all video architectures

Cisco cBR-8 : CCAP Manageability

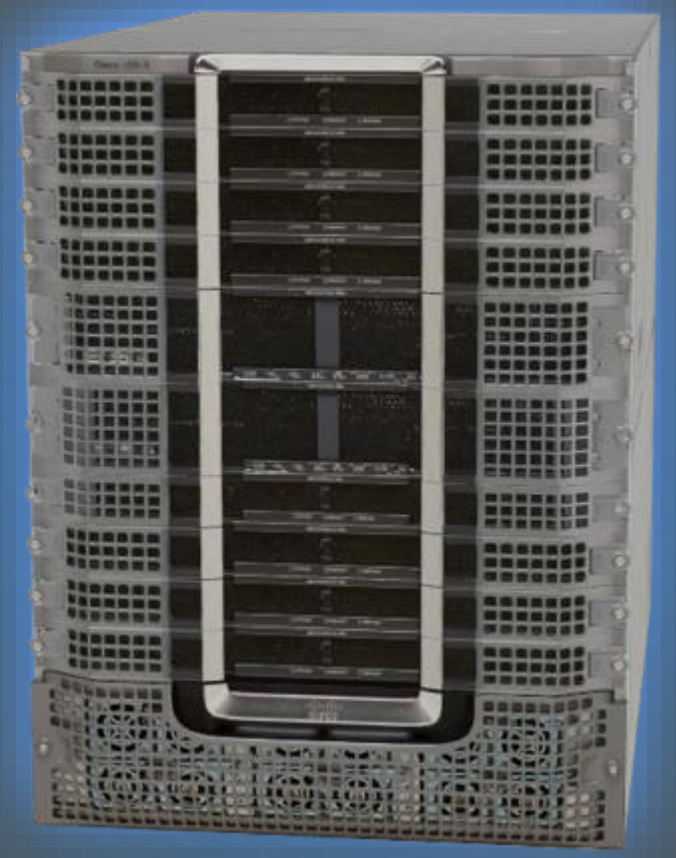

- Multi-User Environment Support
  - Role-Based Access - executable commands limited to users by defined role via TACACS
  - CLI and SDN Based Video Status and Provisioning Utilities
  - Video engineers don’t need to learn IOS
- Optimized Configuration and Management of Video
  - Service Group Configuration
  - Logical Interface Definition
  - Video Control Groups
- Smart Licensing minimizes licensing operations

cBR-8 designed for the operator

Cisco cBR-8: Integrated CCAP Architecture

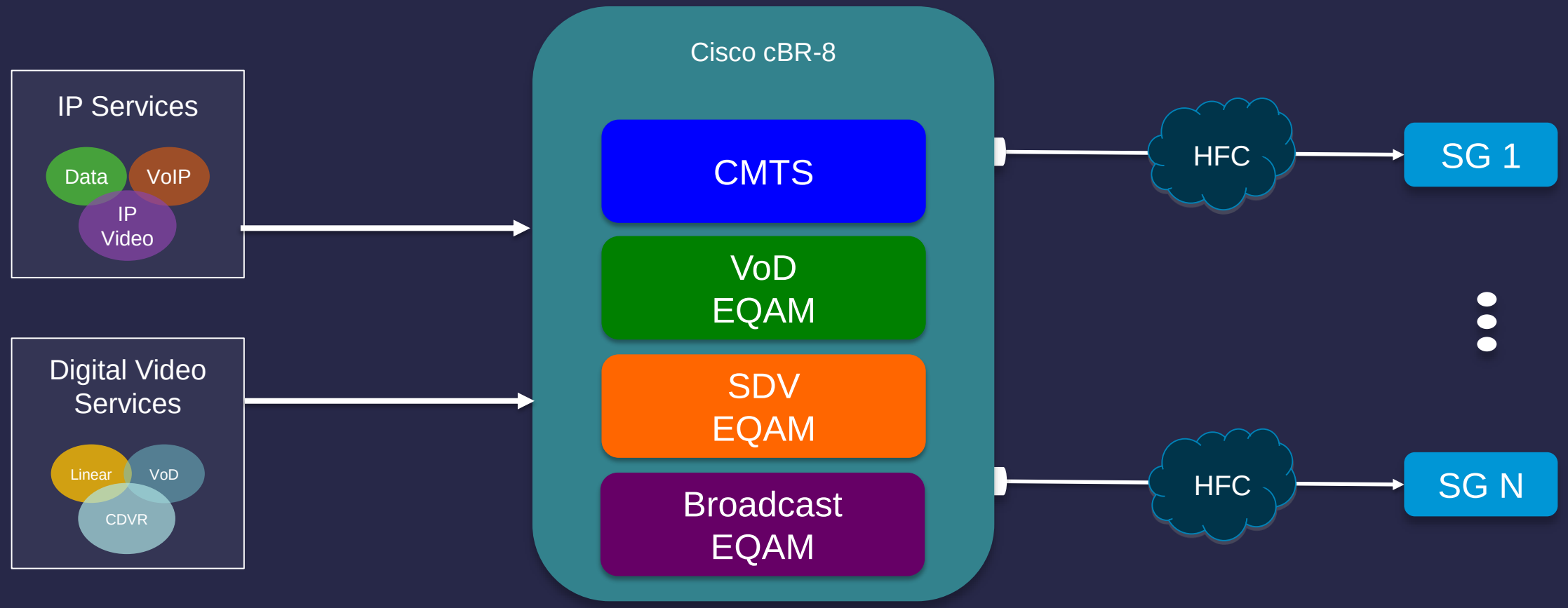

Reduce rack space and power consumption significantly

Cisco cBR-8: RPHY CCAP Architecture

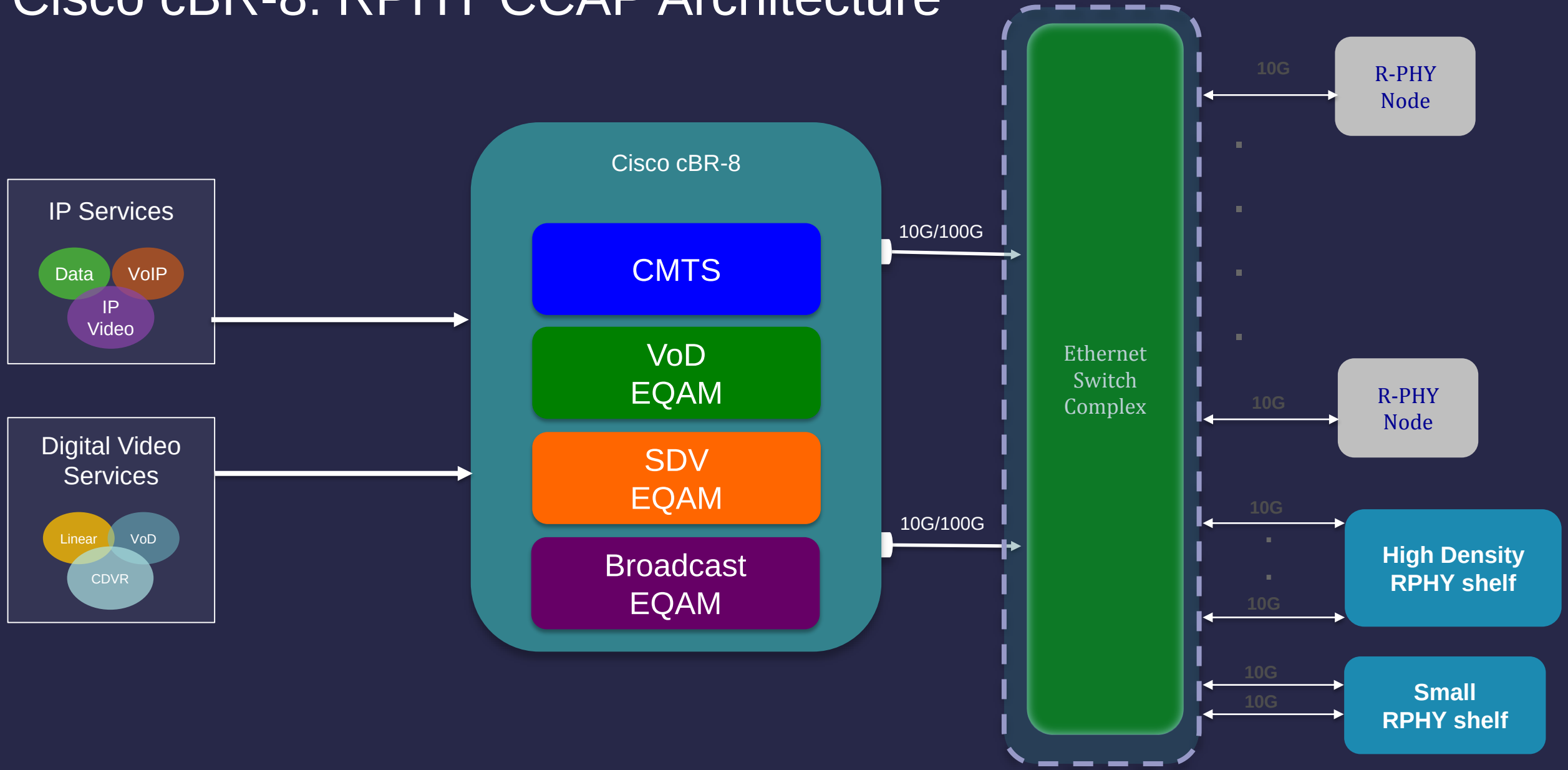

Converged Interconnect Network (CIN)

- The CIN provides the IP and Ethernet connectivity between the R-PHY Core and RPDs.
- CIN Attributes:
  - 10G/100G Ethernet as the general connectivity solution
  - High RPD scale required
  - Long-distance 10GE connections to the RPDs, typically over DWDM.

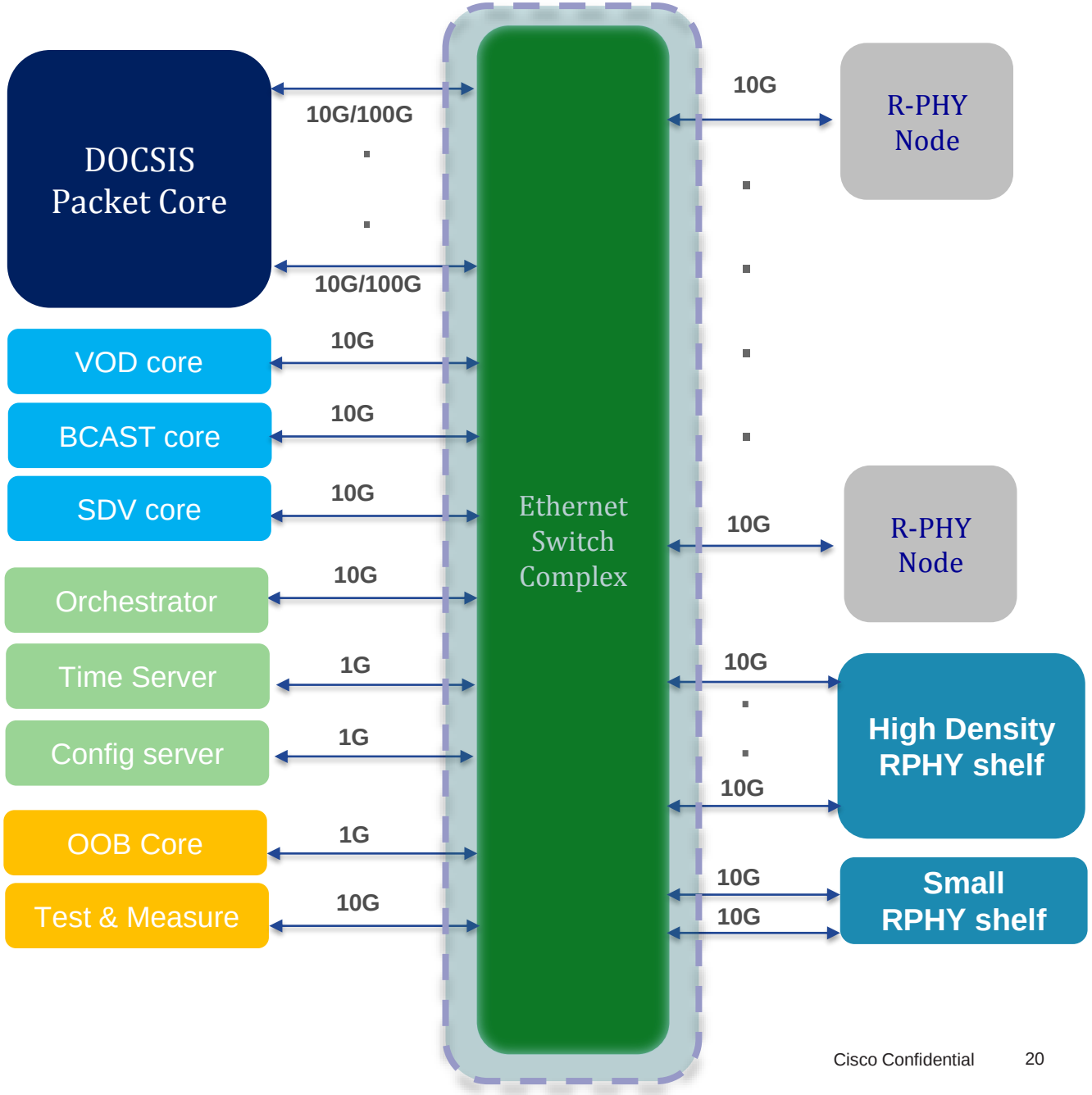

D9485 – DAVIC QPSK Platform (SCTE55-2)

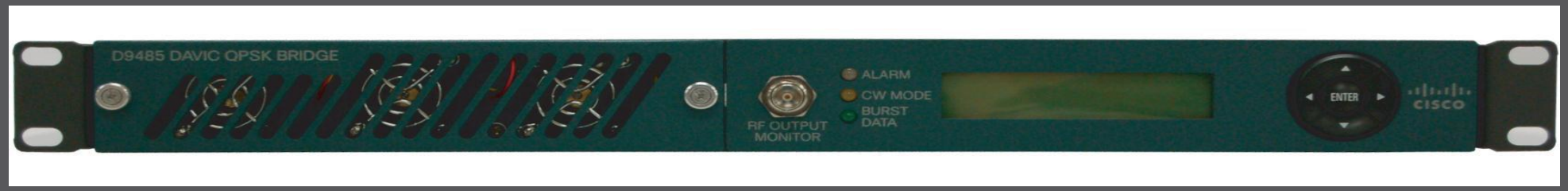

Supports Traditional RF Mode or RPHY Mode.

- Integrates one QPSK modulator (D9482) and eight QPSK demodulators (D9494)
- Contains interleaving and Reed-Solomon FEC for improved performance
- Implements DAVIC MAC control algorithm
- RPHY Mode:
  - 55-2 Controller Implementation is a Software / Firmware Upgrade to the existing Cisco D9485
  - Provides 10/100/1000BASE-T Ethernet for all application data plus remote operation
  - 55-2 Controller acts as Auxiliary CCAP Core
  - 55-2 traffic can pass through or completely bypass the CCAP Core
  - Principal CCAP Core needs only to support allocation and RF configuration of channels for 55-2 but no handling of the protocol or pseudowires

RPHY OOB Architecture (SCTE55-2 PowerKey Markets)

WAS

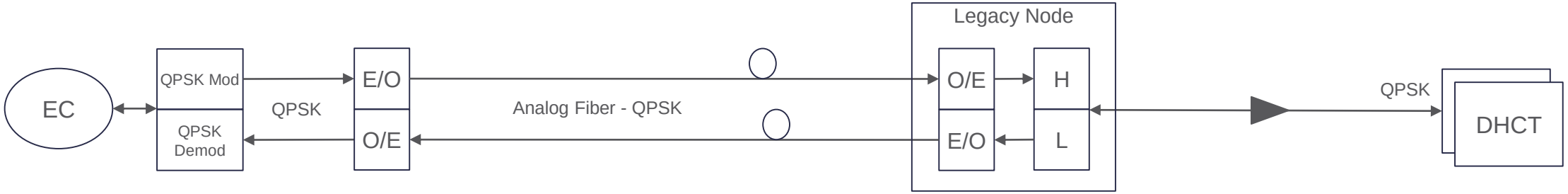

RPHY

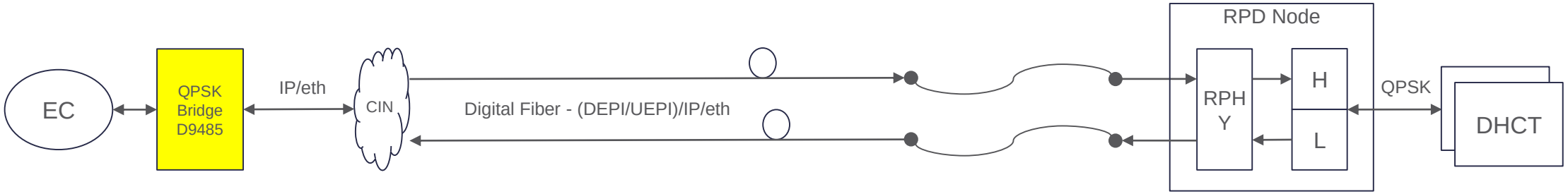

SCTE55-1 OOB (Arris Markets) WAS:

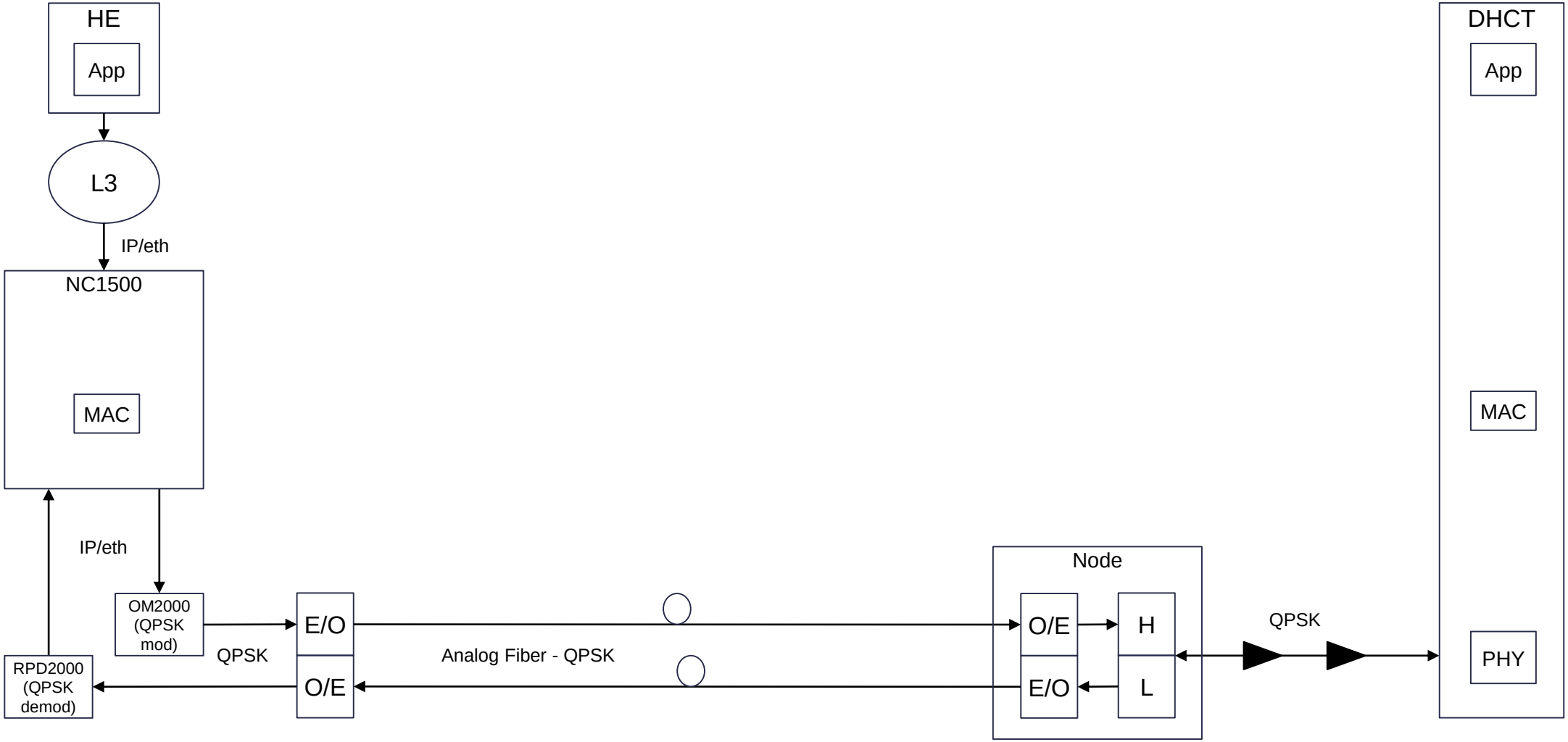

SCTE55-1 OOB (Arris Markets) RPHY Is:

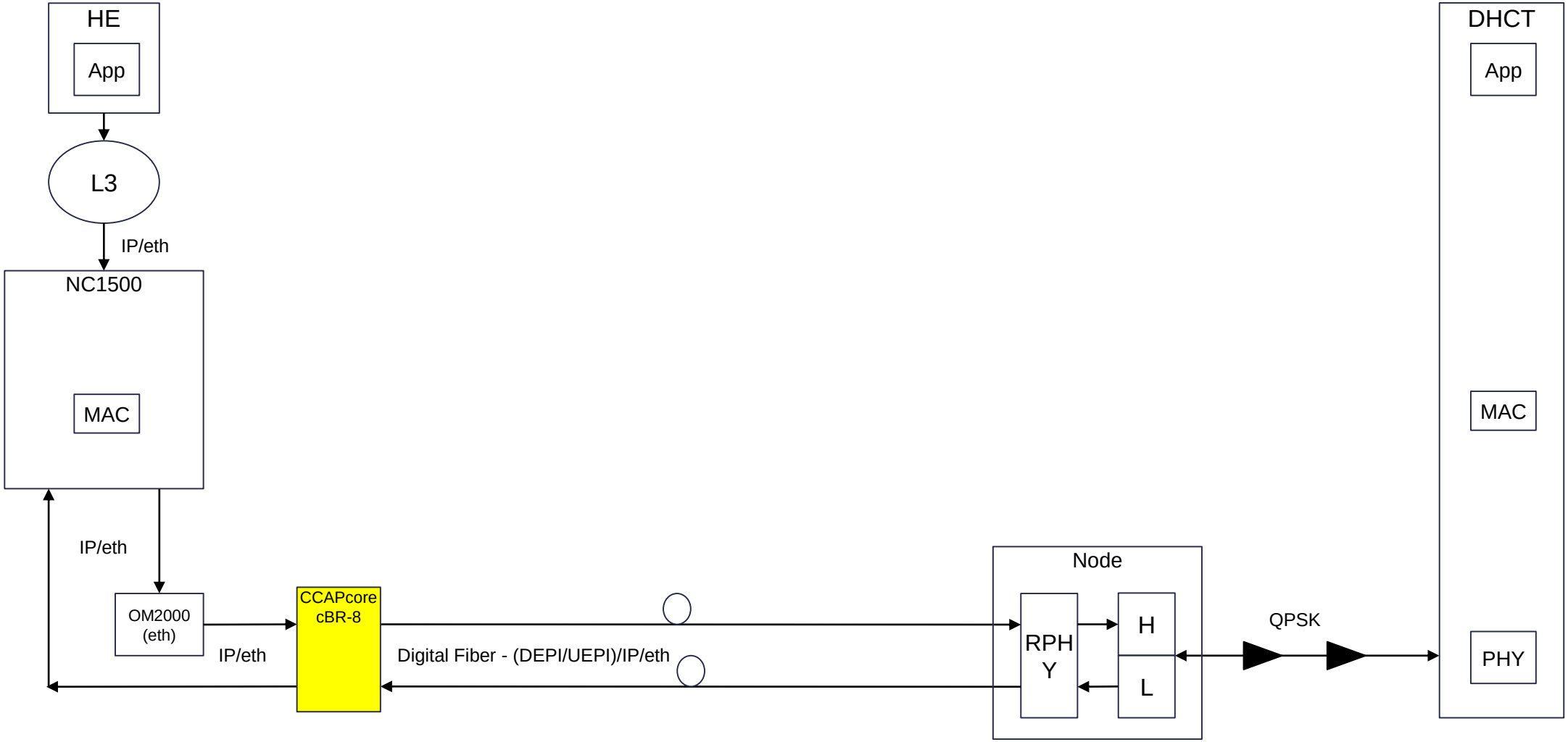

RPHY Deployment Considerations

- Vendor Interop
  - Bookend Solution or Core/RPD Interop
  - Proprietary or Standards Based Solution
- Pilot and Leakage Detection Tones
  - Legacy and new proprietary implementations
- US Spectrum Monitoring
  - Pathtrack not evolving their product to R-PHY
  - Triggered Spectrum Management standard evolving

Video Convergence

- Video OOB
  - SCTE 55-1 and SCTE 55-2 supported on all Cisco RPD's
  - SCTE 55-1 requires CCAP core processing per standards
  - SCTE 55-2 multicast directly to the RPD's
- Video Encryption
  - Broadcast, SDV (Pre-Encrypted)
  - VOD (Integrated or Pre-Encrypted)

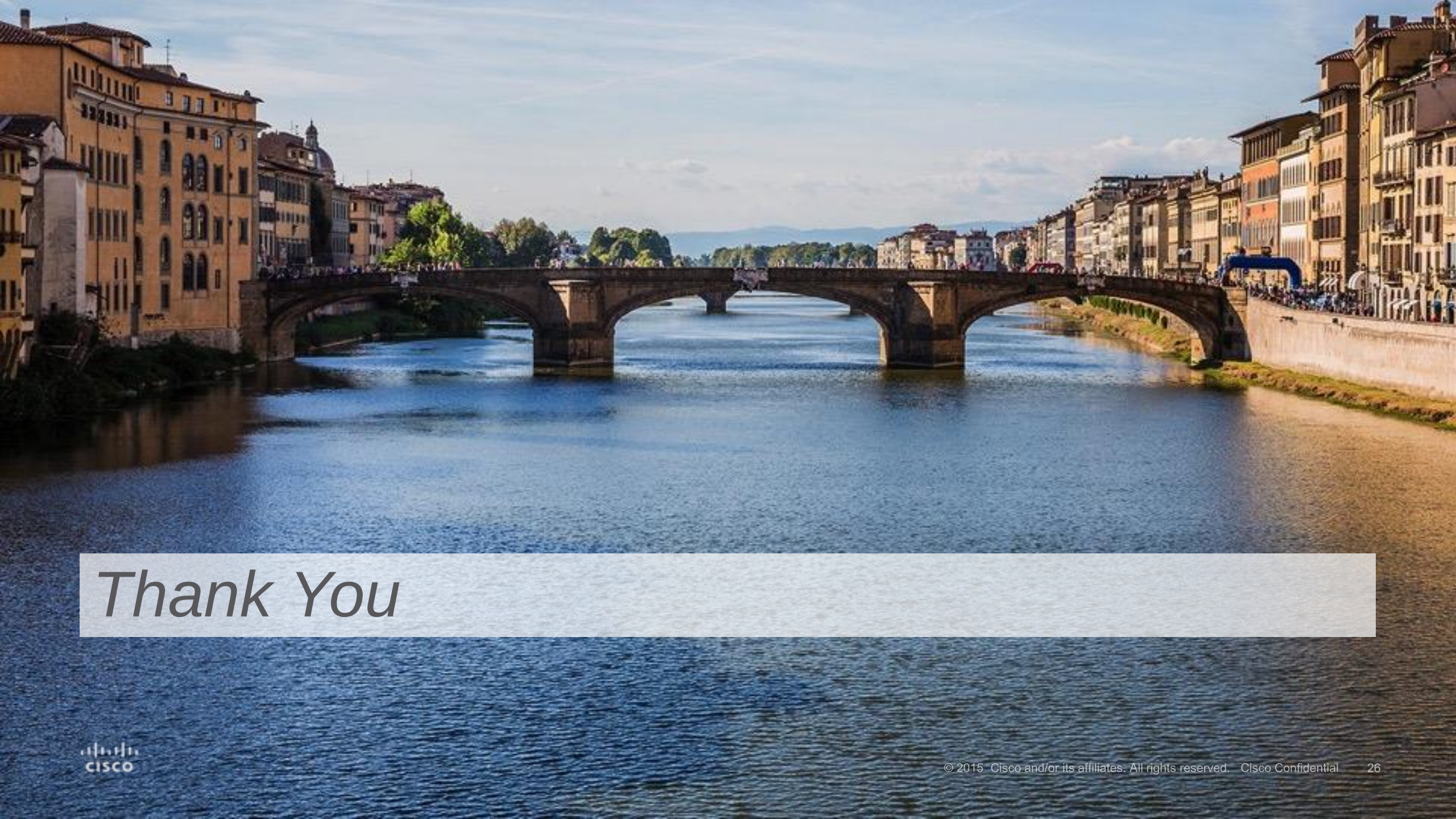

Thank You

Remote Phy; Separating Facts from Fiction

1. It's simple and it works
2. **No** Remote Phy, **No** Virtualization – it is a **key** enabler
3. Centralized software
4. Consistent feature set/velocity with I-CCAP
5. **No** Remote Phy, **No** FDX...It is the foundation for FDX
6. MAC and scheduler can be scaled as needed since they are central
7. Same consistent approach for DOCSIS, Video, and OOB
8. Supported by multiple silicon vendors
9. WiFi, EPOC, Cloud-RAN and other access technologies used a similar approach
10. Min components in RPD yields the best cost
11. Min components in RPD yields the lowest node and plant power
12. Min components in RPD yields max SG density for a given power budget.
13. Min components in RPD yields the best availability
14. DOCSIS and Video traffic are already encrypted on the fiber
15. Security; CMTS SW is kept in a secure location
16. It is the only standard, standards matter!
17. Complete interoperability, OpenRPD Forum

Thank you.