WAN VPN Solutions

How Cisco Uses VPN Solutions to Extend the WAN

A Cisco on Cisco Case Study: Inside Cisco IT

© 2007 Cisco Systems, Inc. All rights reserved. Cisco Public

Overview

- Challenge

  Finding cost-effective alternatives to dedicated circuits connecting remote Cisco® locations, partner locations, and regional locations in a disaster recovery scenario

- Solution

  Cisco IT has deployed cost-effective WAN VPNs to provide WAN connectivity to remote Cisco sites and partner locations, and for disaster recovery connectivity on critical WAN links

© 2007 Cisco Systems, Inc. All rights reserved. Cisco Public

Overview (Contd.)

- Results

  Cisco IT has deployed WAN VPNs in every region of the world

- Next Steps

  Cisco IT will continue to evaluate its connectivity needs worldwide and employ WAN VPN technology when and where it makes business sense

© 2007 Cisco Systems, Inc. All rights reserved. Cisco Public

Challenge – Find Cost-Effective WAN Links

- Cisco IT needed

  Cost-effective and dependable alternative to dedicated circuits at remote company sites

  Cost-effective disaster recovery capability for the most critical WAN links

  Cost-effective alternative to dedicated circuits between Cisco® and its partners that could be deployed quickly, using existing partner Internet access infrastructure

© 2007 Cisco Systems, Inc. All rights reserved. Cisco Public

Solution – Lower-Cost VPN Connections

- Cisco® IT has deployed Internet (or WAN) VPNs for three types of applications:
  - WAN links between Cisco offices
  - Disaster Recovery between global regions
  - Links between Cisco and partner locations

© 2007 Cisco Systems, Inc. All rights reserved. Cisco Public

Solution – VPNs as Primary WAN Links

- Cisco® has deployed WAN VPNs as a cost-effective, dependable alternative to dedicated circuits at remote company sites
- Can be deployed in several configurations
  - Primary connectivity with backup
  - Primary connectivity without backup
  - Backup connectivity with dedicated primary circuit

© 2007 Cisco Systems, Inc. All rights reserved. Cisco Public

Solution – Primary WAN Links (Contd.)

- Primary remote site VPN design
  - Appropriate when dedicated circuits are cost prohibitive, but high availability is critical
  - Consists of dual remote VPN routers and dual IPSec/GRE/VPNs
  - Offers primary connectivity plus full redundancy
  - Has not been deployed to date by Cisco® IT

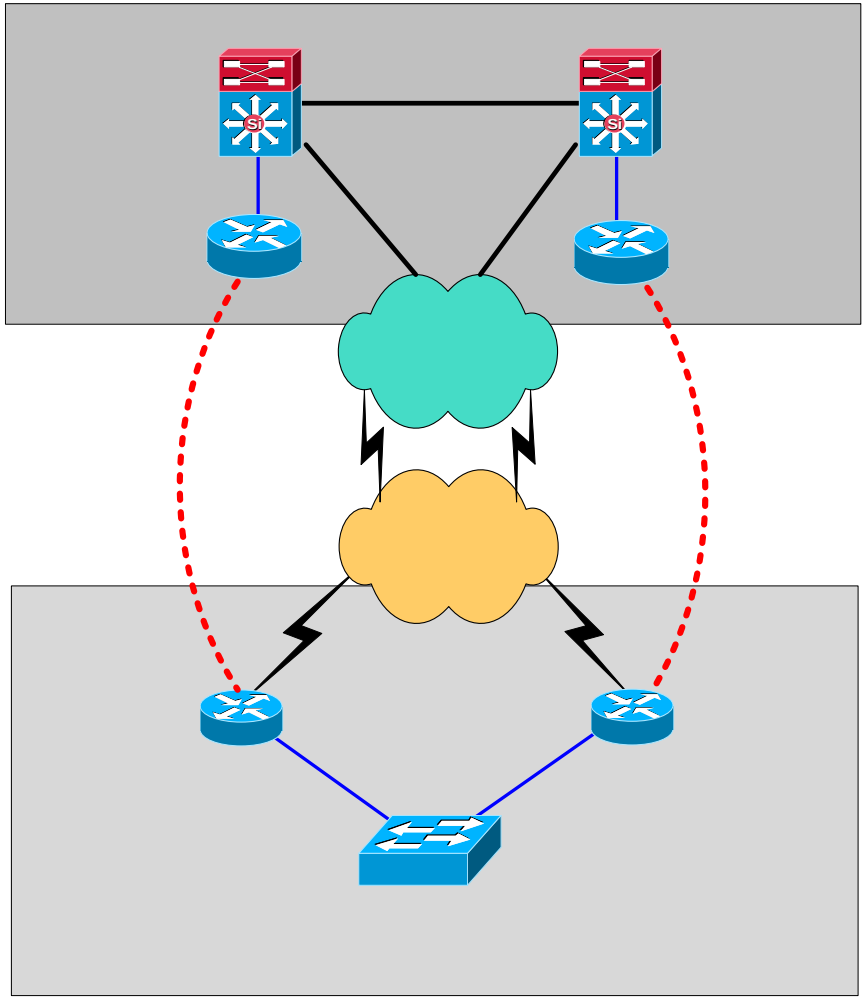

© 2007 Cisco Systems, Inc. All rights reserved. Cisco Public

Solution – WAN Links Between Cisco Offices (Contd.)

- Primary connectivity with single remote ISP
  - Appropriate where uninterrupted availability is not as critical
  - Consists of single remote VPN router connected to two headend routers at the regional hub using two IPSec/GRE tunnels
  - Offers primary connectivity with limited redundancy
  - Has been deployed in several locations including Anchorage and Honolulu in the United States, and in Costa Rica

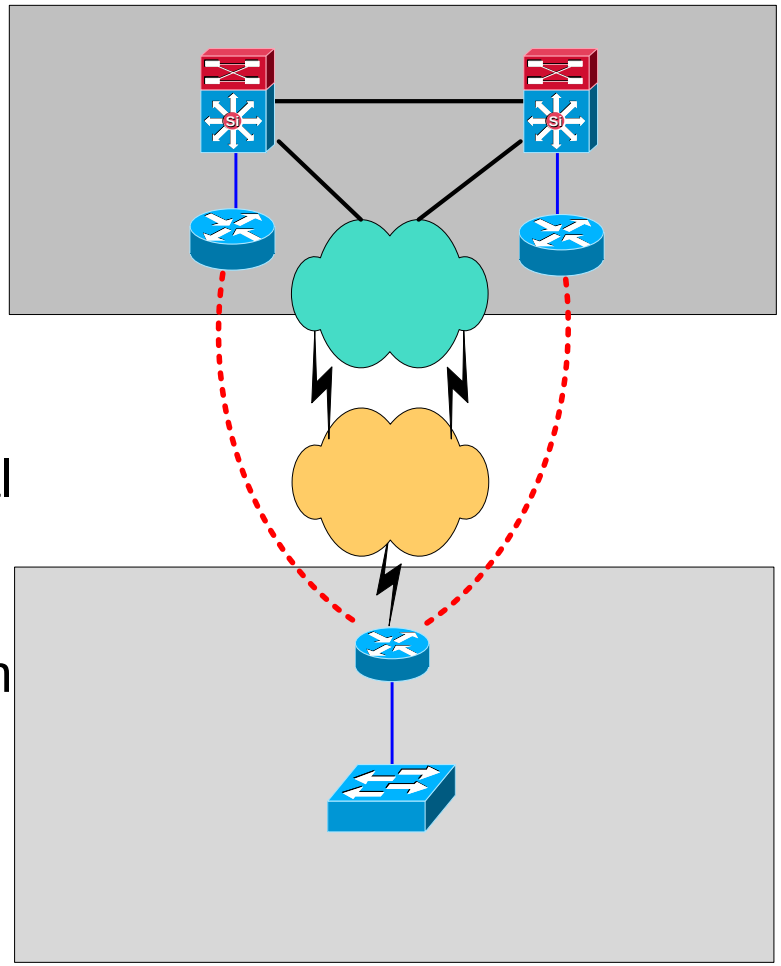

© 2007 Cisco Systems, Inc. All rights reserved. Cisco Public

Solution – WAN Links Between Cisco Offices (Contd.)

- Backup connectivity with dedicated primary circuit
  - Appropriate where dedicated primary circuit can be cost justified, but cost of dedicated backup circuit cannot
  - Consists of single remote VPN router connected to a single headend router at the regional hub through a single IPSec/GRE tunnel and VPN
  - Offers backup connectivity to dedicated primary circuit
  - Has been deployed in several locations including Mexico City, Buenos Aires, and Rio de Janeiro

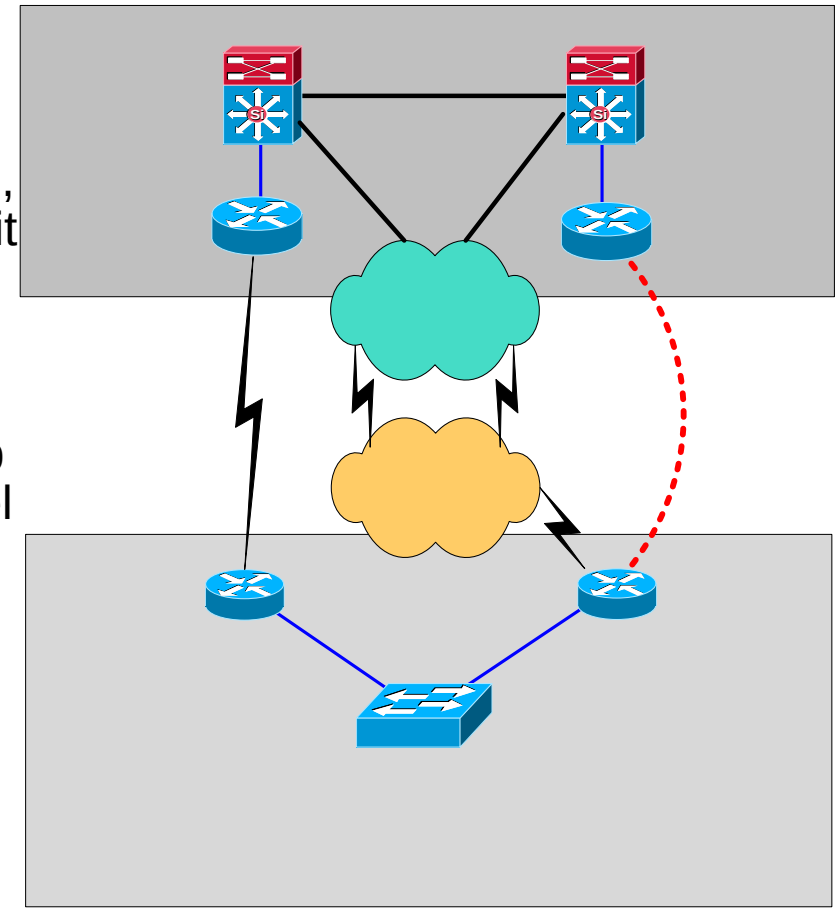

© 2007 Cisco Systems, Inc. All rights reserved. Cisco Public

Solution – Disaster Recovery Between Global Regions

- WAN links between major Cisco® locations have been designed with redundancies
- Additional measures may be justified to protect links in catastrophic situations
- Cisco IT has deployed WAN VPN for disaster recovery between the United States and Europe, using existing Internet access

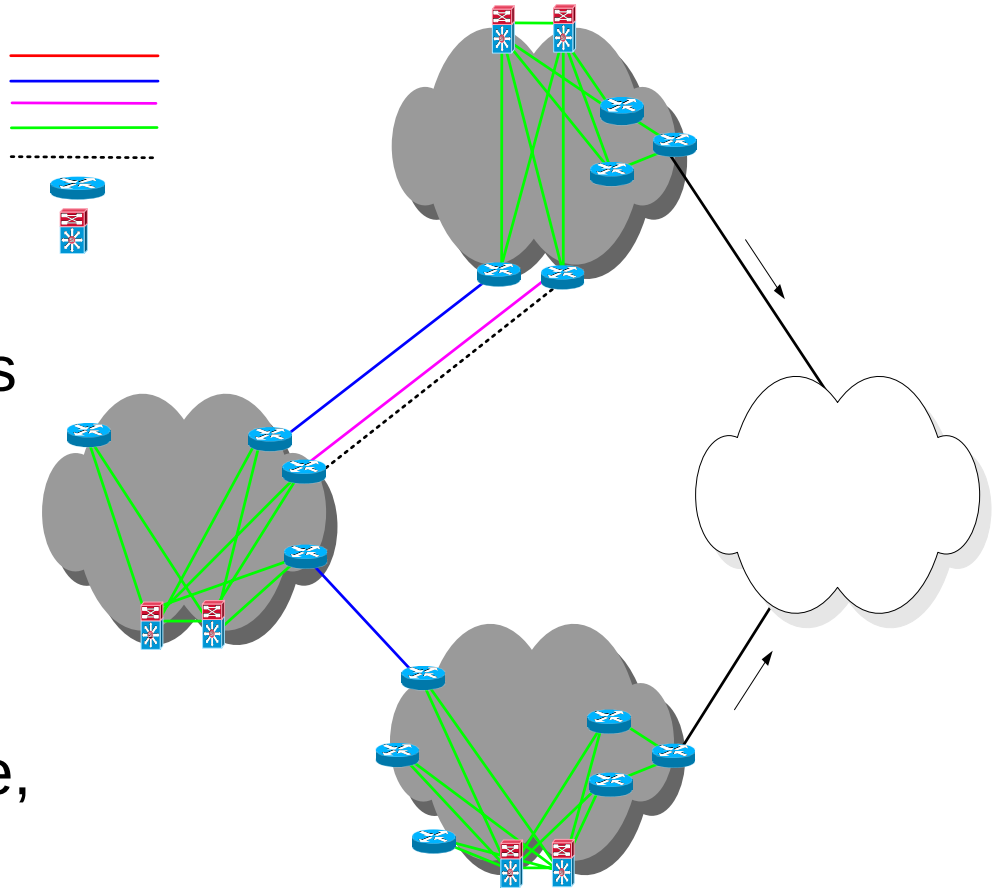

© 2007 Cisco Systems, Inc. All rights reserved. Cisco Public

Solution – Links Between Cisco and Partner Locations

- Cisco® has deployed WAN VPNs as a cost-effective, dependable alternative to dedicated circuits between Cisco and partner locations
- Benefits of VPN extranet connectivity include:
  - Eliminating cost of WAN circuits used in traditional extranet connectivity
  - Eliminating hardware costs for internal clients
  - Accelerating implementation
  - Facilitating short-term extranet connectivity or fast location moves
  - Supporting partner telecommuters with user-based VPNs

© 2007 Cisco Systems, Inc. All rights reserved. Cisco Public

Solution – Links Between Cisco and Partner Locations (Contd.)

- Deployed in approximately 50 locations, in one of two models
  - Extranet Remote LAN model
  - Interconnect model

© 2007 Cisco Systems, Inc. All rights reserved. Cisco Public

Solution – Links Between Cisco and Partners (Contd.)

- Extranet Remote LAN model
  - An extension of the Cisco® network at the partner site
  - Router managed by Cisco at the partner site terminates transport connectivity from Cisco
  - Currently connects about 20 partner sites

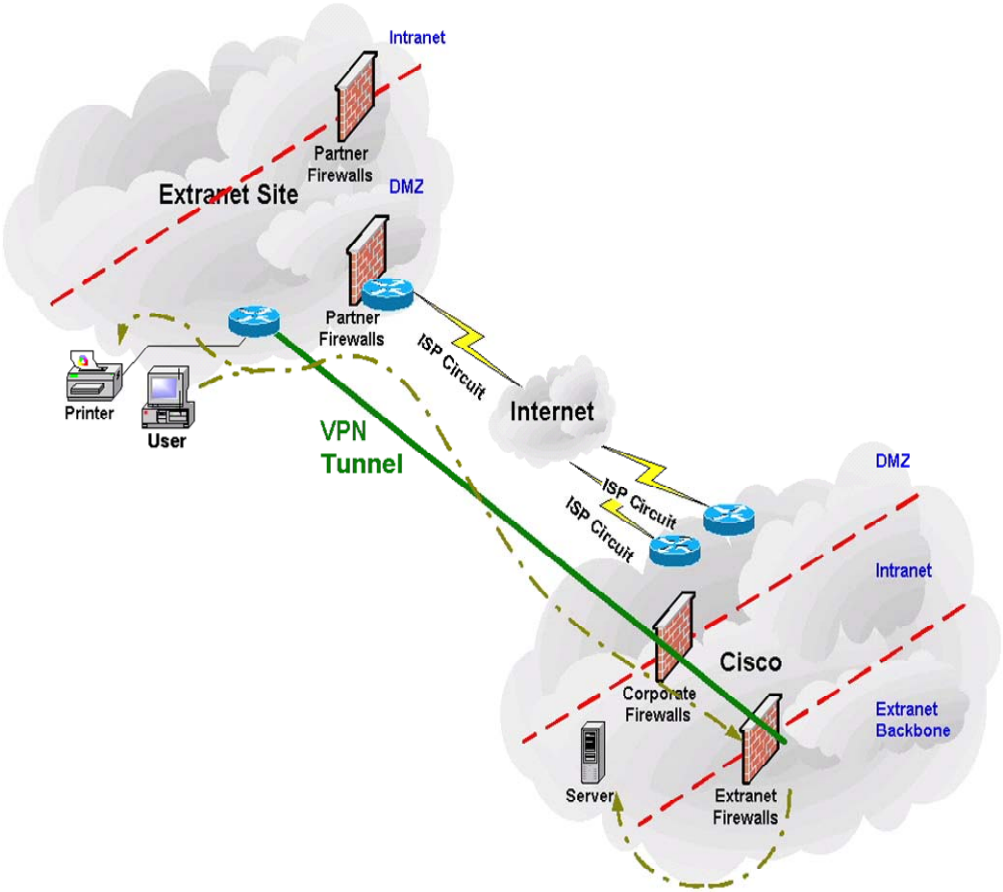

© 2007 Cisco Systems, Inc. All rights reserved. Cisco Public

Solution – Links Between Cisco and Partners (Contd.)

- Interconnect model
  - Partners connect through their corporate LAN, which connects with the Cisco® LAN
  - Respective firewalls protect each company's resources
  - Cisco translates partner IP addressing into Cisco addresses using NAT
  - More than 30 partners currently use Interconnect VPN

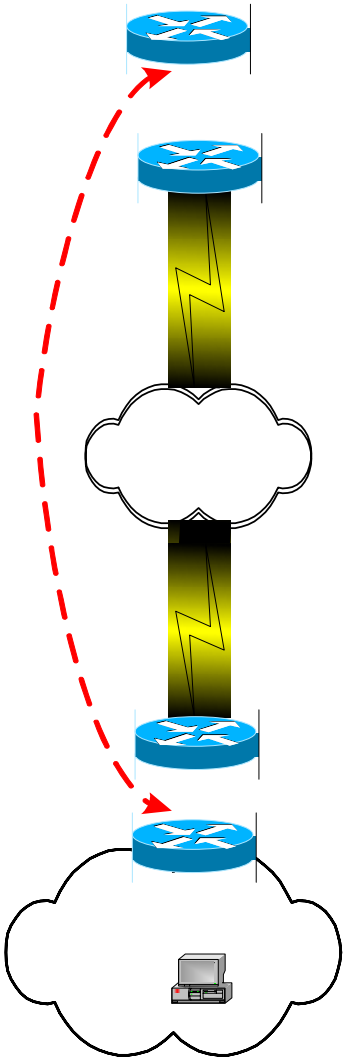

© 2007 Cisco Systems, Inc. All rights reserved. Cisco Public

Results – Summary

- Cisco® IT has deployed WAN VPNs in every region of the world

  To provide cost-effective primary or backup connectivity, or both to remote sites

  To deliver disaster recovery capabilities along the most critical WAN routes

  To connect partner sites to the Cisco internal network in a speedy and cost-effective manner

© 2007 Cisco Systems, Inc. All rights reserved. Cisco Public

Results – Summary (Contd.)

- VPNs are useful where they are usually lower cost in comparison to the bandwidth

  Sometimes a tradeoff exists with more frequent outages and a greater difficulty in troubleshooting outages, especially when there are multiple ISPs involved in providing service

© 2007 Cisco Systems, Inc. All rights reserved.

Next Steps – Summary

- Continue to evaluate connectivity needs worldwide and employ WAN VPN technology when and where it makes business sense
- Upgrade remote WAN VPN sites from Cisco® 3640 to newer Cisco 3745 routers as budget and time permits
- Consider, on a case-by-case basis, extending disaster recovery WAN VPNs to other regional hub sites, but no immediate deployment plans in place

© 2007 Cisco Systems, Inc. All rights reserved. Cisco Public

Next Steps – Summary (Contd.)

- Regional regulatory issues and concerns about quality of service will likely limit the use of WAN VPNs throughout the Asia-Pacific region in the near future to more infrastructure-challenged areas and to extranet applications
- Add new extranet VPN endpoints to Cisco locations other than San Jose, California, where appropriate

© 2007 Cisco Systems, Inc. All rights reserved.

To read the entire case study, or for additional Cisco IT case studies on a variety of business solutions, visit Cisco on Cisco: Inside Cisco IT
www.cisco.com/go/ciscoit

Americas Headquarters
Cisco Systems, Inc.
170 West Tasman Drive
San Jose, CA 95134-1706
USA
www.cisco.com
Tel: 408 526-4000
800 553-NETS (6387)
Fax: 408 527-0883

Asia Pacific Headquarters
Cisco Systems, Inc.
168 Robinson Road
#28-01 Capital Tower
Singapore 068912
www.cisco.com
Tel: +65 6317 7777
Fax: +65 6317 7799

Europe Headquarters
Cisco Systems International BV
Haarlerbergpark
Haarlerbergweg 13-19
1101 CH Amsterdam
The Netherlands
www-europe.cisco.com
Tel: +31 0 800 020 0791
Fax: +31 0 20 357 1100

Cisco has more than 200 offices worldwide. Addresses, phone numbers, and fax numbers are listed on the Cisco Website at **www.cisco.com/go/offices.**

©2007 Cisco Systems, Inc. All rights reserved. CCVP, the Cisco logo, and the Cisco Square Bridge logo are trademarks of Cisco Systems, Inc.; Changing the Way We Work, Live, Play, and Learn is a service mark of Cisco Systems, Inc.; and Access Registrar, Aironet, BPX, Catalyst, CCDA, CCDP, CCIE, CCIP, CCNA, CCNP, CCSP, Cisco, the Cisco Certified Internetwork Expert logo, Cisco IOS, Cisco Press, Cisco Systems, Cisco Systems Capital, the Cisco Systems logo, Cisco Unity, Enterprise/Solver, EtherChannel, EtherFast, EtherSwitch, Fast Step, Follow Me Browsing, FormShare, GigaDrive, HomeLink, Internet Quotient, IOS, iPhone, IP/TV, iQ Expertise, the iQ logo, iQ Net Readiness Scorecard, iQuick Study, LightStream, Linksys, MeetingPlace, MGX, Networking Academy, Network Registrar, Packet, PIX, ProConnect, RateMUX, ScriptShare, SlideCast, SMARTnet, StackWise, The Fastest Way to Increase Your Internet Quotient, and TransPath are registered trademarks of Cisco Systems, Inc. and/or its affiliates in the United States and certain other countries.

All other trademarks mentioned in this document or Website are the property of their respective owners. The use of the word partner does not imply a partnership relationship between Cisco and any other company. (0704R)