Optoelectronics

Prisma II™ bdr™ Digital Reverse 2:1 Dual Multiplexing System for High Density Installations

Description

The Prisma II™ "carrier-class" platform supports Scientific-Atlanta's revolutionary bdr™ digital reverse technology. The Prisma II bdr™ Digital Reverse 2:1 Dual Multiplexing System includes a unique approach for incorporating cost-effective network redundancy as well as saving space and cost.

At the transmit end of the system, typically in a hub or remote terminal, four 5 to 42 MHz analog reverse path signals are input to a two slot wide Transmit Processor. The Transmit Processor converts each RF signal to its own baseband digital reverse stream. The data streams are paired and multiplexed together, resulting in two high data rate streams, one for each pair of inputs. Laser modules installed within the Transmit Processor Frame convert the high data rate stream to an optical signal for transmission at either 1310 nm or 1550 nm wavelengths. 1550 nm ITU grid wavelengths are used for Dense Wave Division Multiplexing (DWDM) applications.

On the receive end, typically in a large hub or headend, two Receiver Modules located in the Receive Processor frame receive the optical signal and perform conversion back to the baseband data stream. The Receive Processor de-multiplexes the data stream and converts the resultant data streams back to analog reverse path signals for routing to termination equipment.

Features

- High-performance baseband digital reverse technology with 12-bit encoding enables transmission of analog video and high-order digital modulation signals (e.g., 16 QAM, 64 QAM and 256 QAM)
- High Density deployment of two 2:1 digitally multiplexed 5-42 MHz reverse signals
- 2:1 time division multiplexing reduces requirements for costly 1550 nm ITU transmitters by 50%
- Long reach transmission capabilities eliminate need for optical amplifiers, reducing cost and space requirements
- Capable of sending 48 individual 5-42 MHz reverse signals over a single fiber
  - -leverages 2:1 time division multiplexing for doubling fiber usage
  - -compatible with Scientific-Atlanta's 24 wavelength DWDM system
- Unique sub-module design provides functions for full path redundancy and dense product packaging in Prisma II platform
- Simplified set-up reduces installation time and expertise requirements
- Distance and temperature independent link performance simplifies engineering and maintenance requirements
- Space-saving, high-density deployment in Prisma II platform increases deployment cost efficiency
- Extended temperature performance enables Remote Terminal applications
- High-speed remote control and monitoring via Scientific-Atlanta's Transmission Network Control System (TNCS)

ROSA™ SUPPORTED

Manage your network with ROSA and TNCS open standards element management. Get faster mean-time-to-repair, increased uptime, and management that evolves as you provision your networks. US toll-free 1-800-722-2009. EMEA +32 56 445 445. www.scientificatlanta.com/ROSA

Prisma II bdr Digital Reverse 2:1 Dual Multiplexing System for High Density Installations

Block Diagrams

Typical Application

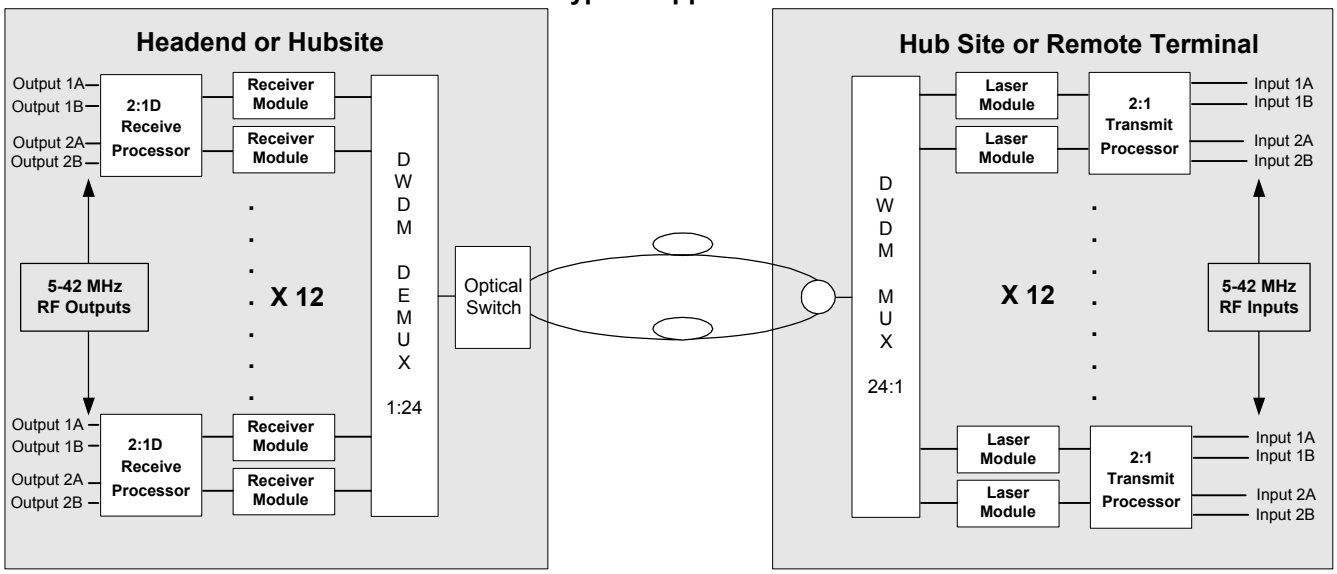

Full Optical Path Redundancy Application

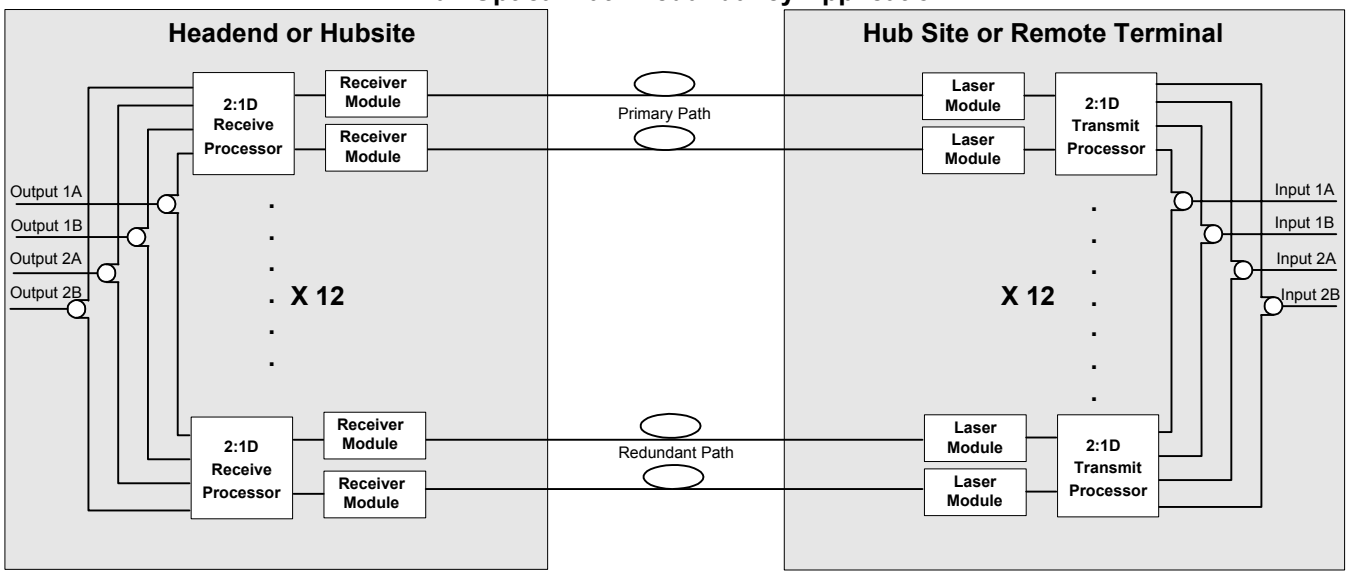

Prisma II bdr Digital Reverse 2:1 Dual Multiplexing System for High Density Installations

Block Diagram

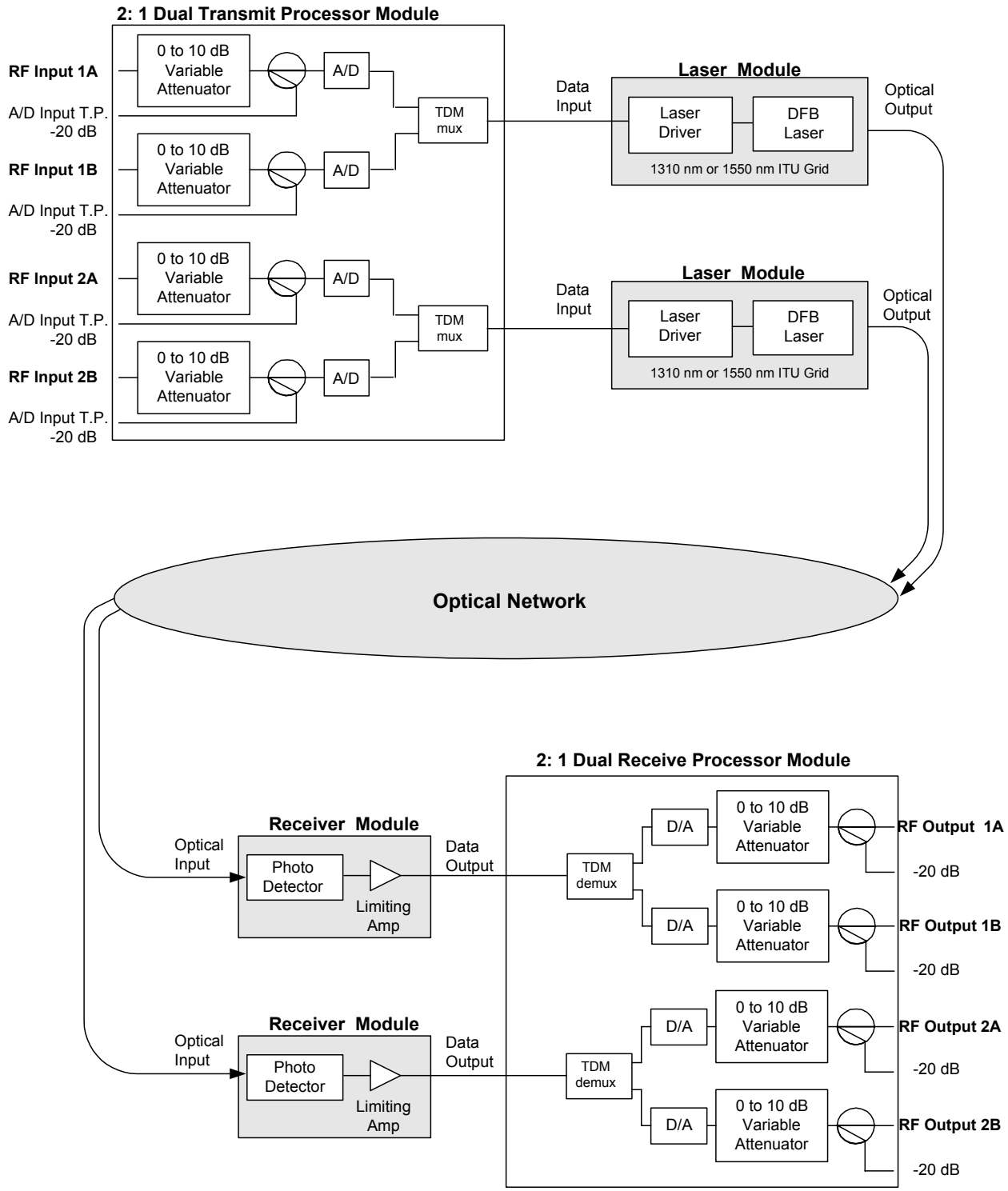

Prisma II bdr Digital Reverse 2:1 Dual Multiplexing System for High Density Installations

Scientific Atlanta

Module Specifications

2:1D Transmit Processor	Units		Notes
RF Input Level Requirements	dBmV/Hz	See Link Performance Section	
RF Input Return Loss	dB	16	
Input RF Variable Attenuation Range	dB	0 to 10	
Power Consumption (maximum)	W	11	
Data Output to Laser Module	Gbps	2.5	
A/D Input Test Point	dB	-20 ± 0.5	1

Laser Module	Units		Notes
Data Input from 2:1 Transmit Processor	Gbps	2.5	
Optical Wavelength	nm	1550 ITU grid 200 GHz spacing 1550 non-ITU 1310 nm	
Power Consumption (maximum)	W	8 (1550 nm ITU) 6.5 (1550 non-ITU) & (1310 nm)	
Optical Output Power (modulated)	dBm	0 or 7	
Optical Interface		SC/APC Connector	

2:1D Receive Processor	Units		Notes
Data Input from Receiver Module	Gbps	2.5	
RF Output Level	dBmV/Hz	See Link Performance Section	
RF Output Return Loss	dB	16	
Output RF Variable Gain Control Range	dB	0 to -10	
Power Consumption (maximum)	W	15	
RF Output Test Point	dB	-20 (± 0.5 dB)	
Receiver Module	**Units**		**Notes**
Optical Input Power Range: SR module	dBm	-5 to –22	2
Optical Input Power Range: ER module	dBm	-10 to -29	2
Data Output to Laser Module	Gbps	2.5	
Power Consumption (maximum)	W	1	
Optical Interface		SC/APC connector	

Mechanical	Units		Notes
Operating Temperature Range (ambient)	°C °F	-40 to +65 -40 to +149	3,4
Physical Dimensions (any Processor with 2 Receiver or 2 Laser Modules)			
Depth	in. cm	9.8 24.9	
Width	in. cm	2.1 5.3	
Height	in. cm	7.6 19.3	
Weight	lb kg	5.0 2.3	

Notes:
1. Test point level is –20 dB referenced to the RF input with attenuator set at 0 dB.
2. System designs should consider the effects of wavelength dispersion in long fiber lengths. This can result in up to 2 dB loss of Rx sensitivity over a 100 km distance.
3. Recommended for use only in non-condensing environments.
4. Receive Processor operating temperature range is –10 to +65°C.

Prisma II bdr Digital Reverse 2:1 Dual Multiplexing System for High Density Installations

Link Performance

General	Units		Notes
Bandpass	MHz	5-42	
Full Scale Single CW Carrier Amplitude	dBmV	54	1,2,3
Noise Floor Amplitude	dBmV/Hz	-85	1,3
Link Gain (minimum)	dB	17	3,4,5
Response Flatness	dB	± 0.5	

Group Delay

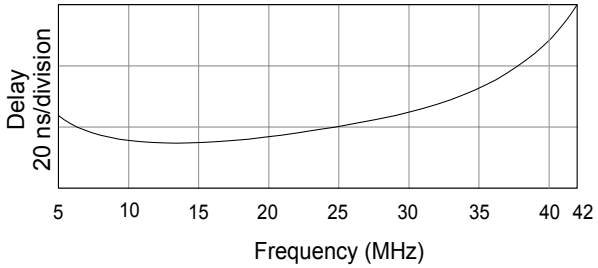

Notes:
1. With respect to the input port on 2:1 Transmit Processor.
2. A CW carrier of this amplitude applied to the RF input will exercise the full-scale range of the A/D converter. Full scale is analogous to 100% OMI for Analog Lasers.
3. Variable Attenuator on 2:1 Transmit Processor set to 0 dB.
4. Variable Gain Control on 2:1 Receive Processor set to 0 dB.
5. Add Link Gain (dB) to Transmit Processor RF input level to determine Receive Processor RF output level.

Noise Power Ratio (NPR) Performance

(Applies to Constant Power / Hz Loading over 35 MHz band)

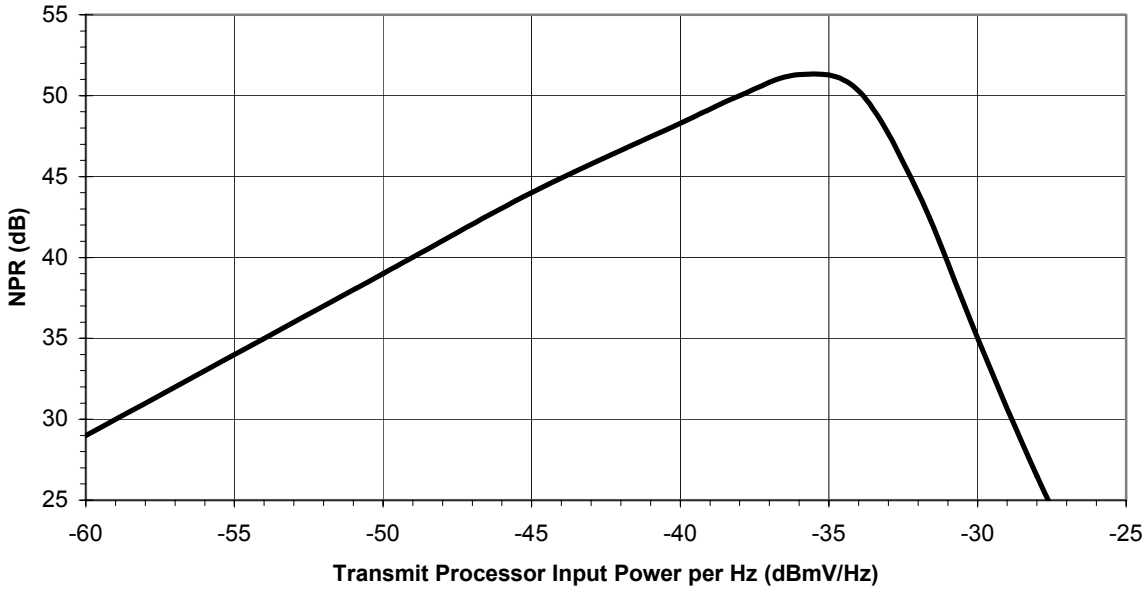

NPR Notes:
1. Input power is specified with respect to the input port of the Transmit Processor module.
2. Variable Attenuator on 2:1 Transmit Processor set to 0 dB and Variable Gain Control on 2:1 Receive Processor set to 0 dB.

Note:
Unless otherwise stated, all link performance specifications shown reflect minimum performance over the specified operating temperature range.

Ordering Information

For a complete system, a minimum of one each (Transmit Processor, Laser Module, Receive Processor and Receiver Module) is required.

Prisma II 2:1 Transmit Processor (each holds up to 2 Laser Modules)
Prisma II 2:1 Receive Processor (each holds up to 2 Receiver Modules)

Sample

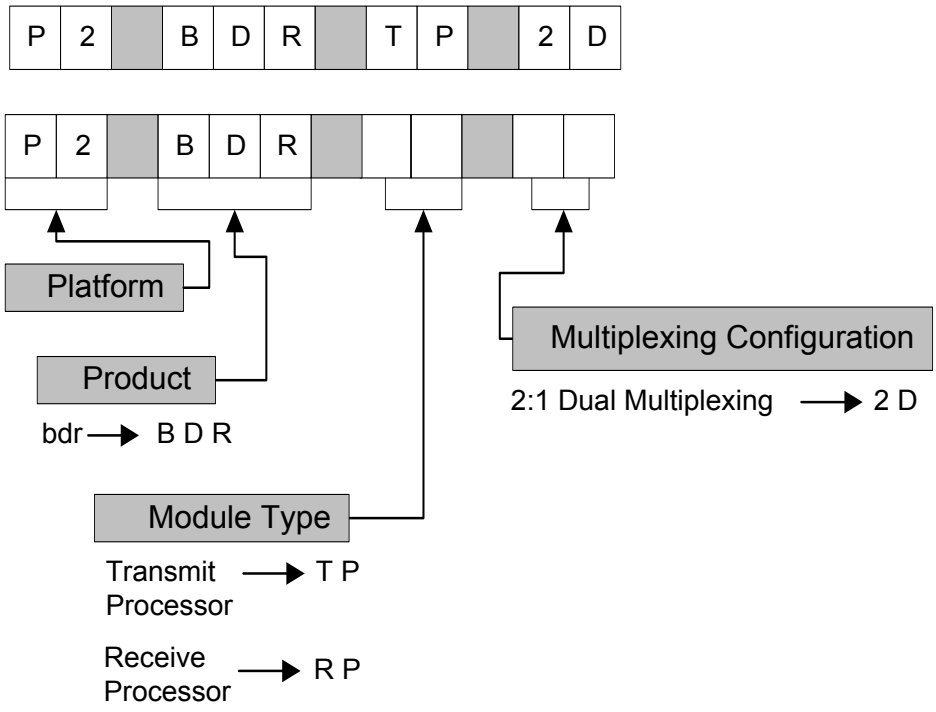

Ordering Information, continued

Prisma II Laser Module

Sample

P	2		B	D	R		L	S	M		I	T	U	2	1		0	0		S	A

P	2		B	D	R		L	S	M												

Platform

Product

bdr → B D R

Module Type

Laser Module → L S M

Wavelength

1530.33	→	ITU59*
1531.90	→	ITU57*
1533.47	→	ITU55*
1535.04	→	ITU53*
1536.61	→	ITU51*
1538.19	→	ITU49*
1539.77	→	ITU47*
1541.35	→	ITU45*
1542.94	→	ITU43*
1544.53	→	ITU41*
1546.12	→	ITU39*
1547.72	→	ITU37*
1549.32	→	ITU35*
1550.92	→	ITU33*
1552.52	→	ITU31*
1554.13	→	ITU29*
1555.75	→	ITU27*
1557.36	→	ITU25*
1558.98	→	ITU23*
1560.61	→	ITU21*
1562.23	→	ITU19*
1563.86	→	ITU17*
1565.50	→	ITU15*
1567.13	→	ITU13*
1310	→	1310D
1550	→	1550D

Output Power

0 dBm → 00
*7 dBm → 07

Connectors

SC/APC → S A

Note:
*ITU wavelengths ITU13 through ITU59 are also available in 7 dBm output.
ITU wavelengths ITU21 through ITU35 are primary wavelengths used in 8 channel DWDM systems.
The balance of wavelengths are incremental for greater DWDM density requirements.

Ordering Information, continued

Prisma II Receiver Module

Sample

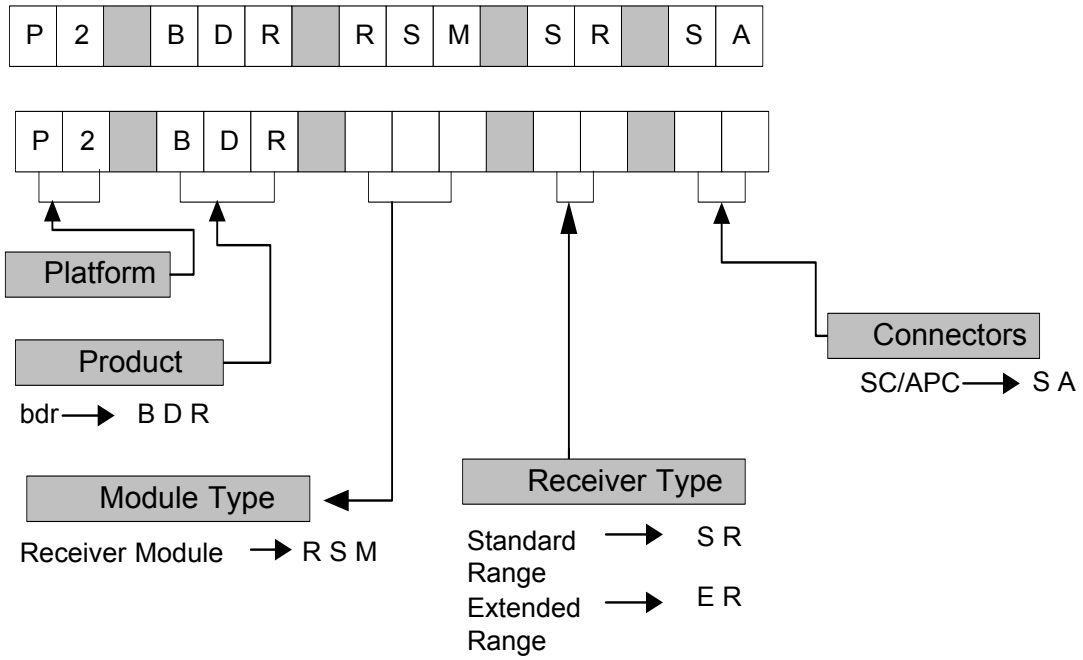

Prisma II products include the industry's most complete range of high performance optical components:

	For more information refer to:
Platform	Prisma II Data Sheet Part Number 739199
1310 nm Transmitters	Prisma II Data Sheet Part Number 739200
1550 nm Transmitters	Prisma II Data Sheet Part Number 739201
1550 nm Optical Amplifiers	Prisma II Data Sheet Part Number 739202
Receivers	Prisma II Data Sheet Part Number 739203
Ancillary Modules	Prisma II Data Sheet Part Number 739205

Scientific-Atlanta, the Scientific-Atlanta logo, and Prisma are registered trademarks of Scientific-Atlanta, Inc.
ROSA is a trademark of Scientific-Atlanta Europe, NV.
Prisma II and bdr are trademarks of Scientific-Atlanta, Inc.
Specifications and product availability are subject to change without notice.
© 2004 Scientific-Atlanta, Inc. All rights reserved.

Scientific-Atlanta, Inc.
1-800-722-2009 or 770-236-6900
www.scientificatlanta.com

Part Number 747874 Rev E
November 2004