Intecom IBX S/80 Serial Integration Guide for Cisco Unity 4.0

Revised April 3, 2006

This document provides instructions for integrating the Intecom IBX S/80 phone system with Cisco Unity.

Note Because the voice messaging ports on the phone system do not enable supervised transfers from Cisco Unity, this integration does not support supervised transfers. Call are transferred with release (or blind) transfers.

Integration Tasks

Before doing the following tasks to integrate Cisco Unity with the Intecom IBX S/80 phone system, confirm that the Cisco Unity server is ready for the integration by completing the applicable tasks in the applicable Cisco Unity installation guide.

The following task lists describe the process for creating, changing, and deleting integrations.

Task List to Create the Integration

Use the following task list to set up a new integration with the Intecom IBX S/80 phone system. If you are installing a new Cisco Unity server by using the applicable Cisco Unity installation guide, you may have already completed some of the following tasks.

1. Review the system and equipment requirements to confirm that all phone system and Cisco Unity server requirements have been met. See the "Requirements" section on page 2.
2. Plan how the voice messaging ports will be used by Cisco Unity. See the "Planning How the Voice Messaging Ports Will Be Used by Cisco Unity" section on page 4.
3. Program the Intecom IBX S/80 phone system and extensions. See the "Programming the Intecom IBX S/80 Phone System" section on page 6.

Corporate Headquarters:
Cisco Systems, Inc., 170 West Tasman Drive, San Jose, CA 95134-1706 USA

© 2006 Cisco Systems, Inc. All rights reserved.

4. Create the integration. See the "Creating a New Integration with the Intecom IBX S/80 Phone System" section on page 8.
5. Test the integration. See the "Testing the Integration" section on page 12.
6. If you have a secondary server for Cisco Unity failover, integrate the secondary server. See the "Integrating a Secondary Server for Cisco Unity Failover" section on page 14.

Task List to Make Changes to an Integration

Use the following task list to make changes to an integration after it has been created.

1. Start the Cisco Unity Telephony Integration Manager (UTIM). See the "Changing the Settings for an Existing Integration" section on page 18.
2. Make the changes you want to the existing integration. See the "Changing the Settings for an Existing Integration" section on page 18.

Task List to Delete an Existing Integration

Use the following task list to remove an existing integration.

1. Start the Cisco Unity Telephony Integration Manager (UTIM). See the "Deleting an Existing Integration" section on page 18.
2. Delete the existing integration. See the "Deleting an Existing Integration" section on page 18.

Requirements

The Intecom IBX S/80 integration supports configurations of the following components:

Phone System

- Intecom IBX S/80.
- VMP option package.
- Software version 6 or later.
- The serial data port in the phone system connected to a serial port (COM1 is the default) on the Cisco Unity server with an RS-232 serial cable.

  We recommend that the serial cable have the following construction:

  – A maximum of 50 feet (15.24 m) in length
  – 24 AWG stranded conductors
  – Low capacitance—for example, no more than 12 pF/ft (39.4 pF/m) between conductors
  – At least 65 percent braided shield over aluminized polymer sleeve around conductors
  – UL-recognized overall cable jacket insulation with low dielectric constant
  – Braided shield fully terminated to and enclosed by a metal connector backshell
  – Gold-plated connector contacts
- The voice messaging ports in the phone system connected to the voice cards in the Cisco Unity server.

- The phone system ready for the integration as described in the installation guide for the phone system.

Cisco Unity Server

- The applicable voice cards, installed. For details, refer to the "Supported Circuit-Switched Phone System Integrations" section in your version of *Cisco Unity System Requirements* at http://www.cisco.com/en/US/products/sw/voicesw/ps2237/prod_installation_guides_list.html.
- Cisco Unity installed and ready for the integration, as described in the applicable Cisco Unity installation guide at http://www.cisco.com/en/US/products/sw/voicesw/ps2237/prod_installation_guides_list.html.
- A license that enables the applicable number of voice messaging ports.
- An available serial port (COM1 is the default).

Integration Description

The Intecom IBX S/80 integration uses a data link, which consists of an RS-232 serial cable connecting the phone system and the Cisco Unity server. The voice messaging lines from the phone system connect to the analog voice cards in the Cisco Unity server. Figure 1 shows the required connections.

Figure 1 Connections Between the Phone System and Cisco Unity

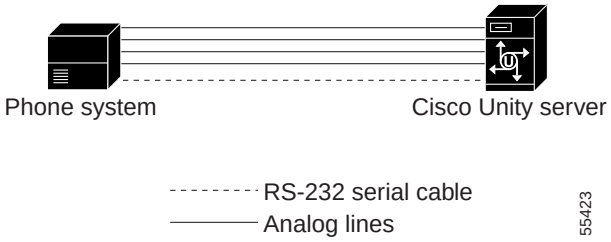

Call Information

The phone system sends the following information through the data link:

- The extension of the called party
- The extension of the calling party (for internal calls) or the phone number of the calling party (if it is an external call and the system uses caller ID)
- The reason for the forward (the extension is busy, does not answer, or is set to forward all calls)

Cisco Unity uses this information to answer the call appropriately. For example, a call forwarded to Cisco Unity is answered with the personal greeting of the subscriber. If the phone system routes the call to Cisco Unity without this information, Cisco Unity answers with the opening greeting.

Integration Functionality

The Intecom IBX S/80 integration with Cisco Unity provides the following integration features:

- Call forward to personal greeting
- Call forward to busy greeting
- Caller ID
- Easy message access (a subscriber can retrieve messages without entering an ID because Cisco Unity identifies the subscriber based on the extension from which the call originated; a password may be required)
- Identified subscriber messaging (Cisco Unity identifies the subscriber who leaves a message during a forwarded internal call, based on the extension from which the call originated)
- Message waiting indication (MWI)

Integrations with Multiple Phone Systems

Depending on the version, Cisco Unity can be integrated with two or more phone systems:

- Cisco Unity 4.0 and 4.1 can be integrated with a maximum of two phone systems at one time. For information on and instructions for integrating Cisco Unity with two phone systems, refer to the *Dual Phone System Integration Guide* at http://www.cisco.com/univercd/cc/td/doc/product/voice/c_unity/integuid/multi/itmultin.htm.
- Cisco Unity 4.2 and later can be integrated with two or more phone systems at one time. For information on the maximum supported combinations and instructions for integrating Cisco Unity with multiple phone systems, refer to the *Multiple Phone System Integration Guide* at http://www.cisco.com/univercd/cc/td/doc/product/voice/c_unity/integuid/multi/multcu42.htm.

Planning How the Voice Messaging Ports Will Be Used by Cisco Unity

Before programming the phone system, you need to plan how the voice messaging ports will be used by Cisco Unity. The following considerations will affect the programming for the phone system (for example, setting up the hunt group or call forwarding for the voice messaging ports):

- The number of voice messaging ports installed.
- The number of voice messaging ports that will answer calls.
- The number of voice messaging ports that will only dial out, for example, to send message notification, to set message waiting indicators (MWIs), to make AMIS deliveries, and to make telephone record and playback (TRAP) connections.

The following table describes the voice messaging port settings in Cisco Unity that can be set in UTIM, and that are displayed as read-only text on the System > Ports page of the Cisco Unity Administrator.

Table 1 Settings for the Voice Messaging Ports

Field	Considerations
Extension	Enter the extension for the port as assigned on the phone system.
Enabled	Check this check box to enable the port. The port is enabled during normal operation. Uncheck this check box to disable the port. When the port is disabled, calls to the port get a ringing tone but are not answered. Typically, the port is disabled only by the installer during testing.
Answer Calls	Check this check box to designate the port for answering calls. These calls can be incoming calls from unidentified callers or from subscribers.
Message Notification	Check this check box to designate the port for notifying subscribers of messages. Assign Message Notification to the least busy ports.
Dialout MWI *(not used by serial or SMDI integrations)*	Check this check box to designate the port for turning MWIs on and off. Assign Dialout MWI to the least busy ports.
AMIS Delivery *(available with the AMIS licensed feature only)*	Check this check box to designate the port for making outbound AMIS calls to deliver voice messages from Cisco Unity subscribers to users on another voice messaging system. Cisco Unity supports the Audio Messaging Interchange Specification (AMIS) protocol, which provides an analog mechanism for transferring voice messages between different voice messaging systems. This setting affects outbound AMIS calls only. All ports are used for incoming AMIS calls. Because the transmission of outgoing AMIS messages may tie up voice ports for long periods of time, you may want to adjust the schedule on the Network > AMIS > Schedule page so that outgoing AMIS calls are placed during closed hours or at times when Cisco Unity is not processing many calls.
TRAP Connection	Check this check box so that subscribers can use the phone as a recording and playback device in Cisco Unity web applications and e-mail clients. Assign TRAP Connection to the least busy ports.

The Number of Voice Messaging Ports to Install

The number of voice messaging ports to install depends on numerous factors, including:

- The number of calls Cisco Unity will answer when call traffic is at its peak.
- The expected length of each message that callers will record and that subscribers will listen to.
- The number of subscribers.
- The number of ports that will be set to dial out only.
- The number of calls made for message notification.
- The number of MWIs that will be activated when call traffic is at its peak.
- The number of AMIS delivery calls.
- The number of TRAP connections needed when call traffic is at its peak. (TRAP connections are used by Cisco Unity web applications and e-mail clients to play back and record over the phone.)
- The number of calls that will use the automated attendant and call handlers when call traffic is at its peak.

It is best to install only the number of voice messaging ports that are needed so that system resources are not allocated to unused ports.

The Number of Voice Messaging Ports That Will Answer Calls

The calls that the voice messaging ports answer can be incoming calls from unidentified callers or from subscribers. Typically, the voice messaging ports that answer calls are the busiest.

You can set voice messaging ports to both answer calls and to dial out (for example, to send message notifications). However, when the voice messaging ports perform more than one function and are very active (for example, answering many calls), the other functions may be delayed until the voice messaging port is free (for example, message notifications cannot be sent until there are fewer calls to answer). For best performance, dedicate certain voice messaging ports for only answering incoming calls, and dedicate other ports for only dialing out. Separating these port functions eliminates the possibility of a collision, in which an incoming call arrives on a port at the same time that Cisco Unity takes the port off-hook to dial out.

The Number of Voice Messaging Ports That Will Only Dial Out, and Not Answer Calls

Ports that will only dial out and will not answer calls can do one or more of the following:

- Notify subscribers by phone, pager, or e-mail of messages that have arrived.
- Turn MWIs on and off for subscriber extensions.
- Make outbound AMIS calls to deliver voice messages from Cisco Unity subscribers to users on another voice messaging system. (This action is available only with the AMIS licensed feature.)
- Make a TRAP connection so that subscribers can use the phone as a recording and playback device in Cisco Unity web applications and e-mail clients.

Typically, these voice messaging ports are the least busy ports.

Caution In programming the phone system, do not send calls to voice messaging ports in Cisco Unity that cannot answer calls (voice messaging ports that are not set to Answer Calls). For example, if a voice messaging port is set only to Dialout MWI, do not send calls to it.

Preparing for Programming the Phone System

Record your decisions about the voice messaging ports to guide you in programming the phone system.

Programming the Intecom IBX S/80 Phone System

If you use programming options other than those supplied in the following procedure, the performance of the integration may be affected.

Do the following procedure.

To Program the Intecom IBX S/80 Phone System

For detailed programming instructions, refer the Intecom Voice Messaging Product Interface document (590-2164-001). For examples of the numbering plan for extensions, see the "Intecom IBX S/80 Numbering Plan for Extensions" section on page 8.

Step 1 On the phone system, create a bidirectional trunk group for the OPX ports to Cisco Unity.

The trunk group must be assigned to the voice messaging designation.

Set the Wang Interface Number (WIN) to **1**.

Note The trunk group must define the user group number that is used in Step 8.

Step 2 Create a trunk port for each Cisco Unity voice messaging port.

Note The trunk ports must define the user group number that is used in Step 8.

Step 3 Create buffers for the cards that are used to interface with voice mail.

In the Slot of PBX field, enter **Octal Trunk** to define the card type.

Step 4 Create a prefix digit table for the trunk group. The significant figures in the table must be zero.

Step 5 Create a route guide to point to the trunk group by using the trunk group created in Step 1 and the prefix digit table created in Step 4.

Step 6 Create a satellite directory group pointing to the trunk group by using the route guide number created in Step 5.

To define the directory group call types, click **Direct**.

Note The satellite directory group must define the user group number that is used in Step 8.

Caution In programming the phone system, do not send calls to voice messaging ports in Cisco Unity that cannot answer calls (voice messaging ports that are not set to Answer Calls). For example, if a voice messaging port is set only to Message Notification, do not send calls to it.

Step 7 Define the pilot number for the satellite directory group.

The pilot number is the extension that subscribers will dial to access their messages.

Step 8 Create a user group for Cisco Unity with the pilot number created in Step 7.

This user group number must also have been defined when creating the trunk group, trunk ports, and satellite directory group.

Step 9 Create a voice class for the Cisco Unity subscribers to access their messages.

When prompted to allow voice mail access and automatic log on to voice mail, click **Yes**.

Confirm that the Pass-Thru option is set to **Yes**. Otherwise, the phone system will not send DTMF sequences to mailboxes.

Step 10 Configure the button templates to define a voice mail feature button so that subscribers have direct access to voice mail and MWIs.

Step 11 Modify the user extension profiles so that calls will forward to the pilot number when the extensions are busy or do not answer, by entering the pilot number in the VID Intemail ID for Voice Line field.

Intecom IBX S/80 Numbering Plan for Extensions

The Intecom IBX S/80 numbering plan for extensions is dependent on the location of the card in the card slot. Extensions are defined as XA and XB with the following variables.

Variable	Meaning
X	The port number (one to four digits), which must be less than 4999.
A	An individual port based on the X port number. The VMP option allows the A port to be translated to an extension number for Cisco Unity by using the following formula: XA = X x 2
B	An individual port based on the X port number. The VMP option allows the B port to be translated to an extension number for Cisco Unity by using the following formula: XB = (X x 2) + 1

For example, port 80A and port 80B would result in the following extensions:

- 80A = 80 x 2 = extension 160
- 80B = (80 x 2) + 1 = extension 161

Note You can use alternate extensions to create multiple line appearances, enable easy message access from cell phones, and simplify addressing messages to subscribers at different locations in Cisco Unity. Enabling alternate MWIs lets Cisco Unity turn MWIs on at more than one extension. For details, see the "Appendix: Using Alternate Extensions and MWIs" section on page 19.

Creating a New Integration with the Intecom IBX S/80 Phone System

After ensuring that the Intecom IBX S/80 phone system and the Cisco Unity server are ready for the integration, do the following procedures to set up the integration and to enter the port settings.

To Create an Integration

Step 1 If UTIM is not already open, on the Windows Start menu of the Cisco Unity server, click **Programs** > **Cisco Unity** > **Manage Integrations**. UTIM appears.

Step 2 In the left pane of the UTIM window, click **Cisco Unity Server**.

Step 3 On the Integration menu of the UTIM window, click **New**. The Telephony Integration Setup Wizard appears.

Step 4 On the Welcome page, click the applicable phone system type, depending on your version of Cisco Unity:

- Cisco Unity 4.2 or later—**Circuit-Switched via Voice Cards**
- Cisco Unity 4.0 or 4.1—**Circuit-Switched (Traditional PBX)**

Step 5 Click **Next**.

Step 6 On the Name the Phone System Integration page, accept the default name or enter the phone system name to identify this integration, then click **Next**.

Step 7 On the Select Integration Method page, click **Serial**, then click **Next**.

Step 8 On the Select Phone System Manufacturer page, click the following settings, then click **Next**.

Table 2 Settings for the Select Phone System Manufacturer Page

Field	Setting
Manufacturer	Intecom
Model	S80 B1
Software Version	All
Configuration File	<if you have made copies of the .ini configuration file, the name of the configuration file that you want to use>

Step 9 On the Select Serial Integration Packet Settings page, enter the following settings, then click **Next**.

Table 3 Settings for the Select Serial Integration Packet Settings Page

Field	Setting
Station Field Length	<the station prefix plus the default extension length; accept the default or click another setting; this length is either 10 or 7>
Default Extension Length	<the default length of extensions on the phone system; accept the default or click another setting>

Step 10 On the Select COM Port Settings page, enter the following settings, then click **Next**.

Table 4 Settings for the Select COM Port Settings Page

Field	Setting
COM Port	<the communications port on the Cisco Unity server that will receive the call information; typically, this setting is 1>
Baud Rate	<the baud rate that the phone system uses>
Data Bits	<the number of data bits that the phone system uses>
Stop Bits	<the number of stop bits that the phone system uses>
Parity	<the parity that the phone system uses>

Step 11 On the Set Number of Voice Messaging Ports page, enter the number of voice messaging ports on Cisco Unity that you want to connect to the phone system, then click **Next**.

This number cannot be more than the number of ports on the installed voice cards or the number of ports set up on the phone system.

Step 12 If other integrations already exist, the Enter Trunk Access Code page appears. Enter the extra digits that Cisco Unity must use to transfer calls through the gateway to extensions on the other phone systems with which it is integrated. Then click **Next**.

Step 13 *(Cisco Unity 4.2 and later only)* On the Reassign Subscribers page, any subscribers whose phone system integration has been deleted and who are not currently assigned to a phone system integration will appear in the list.

If no subscribers appear in the list, click **Next** and continue to Step 14.

Otherwise, select the subscribers that you want to assign to this phone system integration and click **Next**. You can use the following selection controls for selecting subscribers.

Table 5 Selection Controls for the Reassign Subscribers Page

Selection Control	Effect
Check All	Checks the check boxes for all subscribers in the list.
Uncheck All	Unchecks the check boxes for all subscribers in the list.
Toggle Selected	For the subscribers highlighted in the list, toggles between checking and unchecking the check boxes. If some highlighted subscriber check boxes are checked and others are unchecked, clicking this button will check all the check boxes. Clicking again will uncheck all the check boxes.

Step 14 *(Cisco Unity 4.2 and later only)* On the Reassign Call Handlers page, any call handlers whose phone system integration has been deleted and that are not currently assigned to a phone system integration will appear in the list.

If no call handlers appear in the list, click **Next** and continue to Step 15.

Otherwise, select the call handlers that you want to assign to this phone system integration and click **Next**. You can use the following selection controls for selecting call handlers.

Table 6 Selection Controls for the Reassign Call Handlers Page

Selection Control	Effect
Check All	Checks the check boxes for all call handlers in the list.
Uncheck All	Unchecks the check boxes for all call handlers in the list.
Toggle Selected	For the call handlers highlighted in the list, toggles between checking and unchecking the check boxes. If some highlighted call handler check boxes are checked and others are unchecked, clicking this button will check all the check boxes. Clicking again will uncheck all the check boxes.

Step 15 On the Completing page, verify the settings you entered, then click **Finish**.

Step 16 At the prompt to restart the Cisco Unity services, click **Yes**. The Cisco Unity services restart.

Alternatively, you can restart the Cisco Unity services in UTIM on the Tools menu by clicking **Restart Cisco Unity**.

To Enter the Voice Messaging Port Settings for the Integration

---

Step 1 After the Cisco Unity services restart, on the View menu, click **Refresh**.

Step 2 In the left pane of the UTIM window, expand the phone system integration that you are creating.

Step 3 In the left pane, click the name of the phone system.

Step 4 In the right pane, click the **Ports** tab.

Step 5 Enter the settings shown in Table 7 for the voice messaging ports.

For best performance, use the first voice messaging ports for incoming calls and the last ports to dial out. This helps minimize the possibility of a collision, in which an incoming call arrives on a port at the same time that Cisco Unity takes the port off-hook to dial out.

Caution In programming the phone system, do not send calls to voice messaging ports in Cisco Unity that cannot answer calls (voice messaging ports that are not set to Answer Calls). For example, if a voice messaging port is set only to Message Notification, do not send calls to it.

Table 7 Settings for the Voice Messaging Ports

Field	Considerations
Extension	Enter the extension for the port as assigned on the phone system.
Enabled	Check this check box to enable the port. The port is enabled during normal operation. Uncheck this check box to disable the port. When the port is disabled, calls to the port get a ringing tone but are not answered. Typically, the port is disabled only by the installer during testing.
Answer Calls	Check this check box to designate the port for answering calls. These calls can be incoming calls from unidentified callers or from subscribers.
Message Notification	Check this check box to designate the port for notifying subscribers of messages. Assign Message Notification to the least busy ports.
Dialout MWI *(not used by serial or SMDI integrations)*	Check this check box to designate the port for turning MWIs on and off. Assign Dialout MWI to the least busy ports.
AMIS Delivery *(available with the AMIS licensed feature only)*	Check this check box to designate the port for making outbound AMIS calls to deliver voice messages from Cisco Unity subscribers to users on another voice messaging system. Cisco Unity supports the Audio Messaging Interchange Specification (AMIS) protocol, which provides an analog mechanism for transferring voice messages between different voice messaging systems. This setting affects outbound AMIS calls only. All ports are used for incoming AMIS calls. Because the transmission of outgoing AMIS messages may tie up voice ports for long periods of time, you may want to adjust the schedule on the Network > AMIS > Schedule page so that outgoing AMIS calls are placed during closed hours or at times when Cisco Unity is not processing many calls.
TRAP Connection	Check this check box so that subscribers can use the phone as a recording and playback device in Cisco Unity web applications and e-mail clients. Assign TRAP Connection to the least busy ports.

Step 6 Click **Save**.

Step 7 Exit UTIM.

Testing the Integration

To test whether Cisco Unity and the phone system are integrated correctly, do the following procedures in the order listed.

If any of the steps indicate a failure, refer to the following documentation as applicable:

- The installation guide for the phone system.
- *Cisco Unity Troubleshooting Guide*, available at http://www.cisco.com/en/US/products/sw/voicesw/ps2237/prod_troubleshooting_guides_list.html.
- The setup information earlier in this guide.

To Set Up the Test Configuration

Step 1 Set up two test extensions (Phone 1 and Phone 2) on the same phone system that Cisco Unity is connected to.

Step 2 Set Phone 1 to forward calls to the Cisco Unity pilot number when calls are not answered.

Caution The phone system must forward calls to the Cisco Unity pilot number in no fewer than four rings. Otherwise, the test may fail.

Step 3 In the Cisco Unity Administrator, create a test subscriber to use for testing by doing the applicable substeps below.

If your message store is Exchange, do the following:

a. In the Cisco Unity Administrator, go to the **Subscribers** > **Subscribers** > **Profile** page.

b. Click the **Add** icon.

c. Select **New Exchange Subscriber**.

d. On the Add Subscriber page, enter the applicable information.

e. Click **Add**.

If your message store is IBM Lotus Domino, do the following:

a. In the Cisco Unity Administrator, go to the **Subscribers** > **Subscribers** > **Profile** page.

b. Click the **Add** icon.

c. Click **Notes**.

d. In the Address Book list, confirm that the address book listed is the one that contains the user data that you want to import.

If the address book that you want to use is not listed, go to the **System** > **Configuration** > **Subscriber Address Books** page and add a different address book.

e. In the Find Domino Person By list, indicate whether to search by short name, first name, or last name.

f. Enter the applicable short name or name. You also can enter * to display a list of all users, or enter one or more characters followed by * to narrow your search.

g. Click **Find**.

h. On the list of matches, click the name of the user to import.

i. On the Add Subscriber page, enter the applicable information.

j. Click **Add**.

Step 4 In the Extension field, enter the extension of Phone 1.

Step 5 In the Active Schedule field, click **All Hours - All Days**.

Step 6 Click the **Save** icon.

Step 7 In the navigation bar, click **Call Transfer** to go to the Subscribers > Subscribers > Call Transfer page for the test subscriber.

For more information on transfer settings, refer to the "Subscriber Template Call Transfer Settings" section in the Cisco Unity Administrator Help.

Step 8 Under Transfer Incoming Calls, click **Yes, Ring Subscriber's Extension**, and confirm that the extension number is for Phone 1.

Step 9 Under Transfer Type, click **Release to Switch**.

Step 10 Click the **Save** icon.

Step 11 In the navigation bar, click **Messages** to go to the Subscribers > Subscribers > Messages page for the test subscriber.

Step 12 Under Message Waiting Indicators (MWIs), check **Use MWI for Message Notification**.

Step 13 In the Extension field, enter **x**.

Step 14 Click the **Save** icon.

Step 15 Open the Status Monitor by doing one of the following:

- In Internet Explorer, go to **http://<Cisco Unity server name>/web/sm**.
- Double-click the desktop shortcut to the Status Monitor.
- In the status bar next to the clock, right-click the Cisco Unity tray icon and click **Status Monitor**.

To Test an External Call with Release Transfer

Step 1 From Phone 2, enter the access code necessary to get an outside line, then enter the number outside callers use to dial directly to Cisco Unity.

Step 2 On the Status Monitor, note which port handles this call.

Step 3 When you hear the opening greeting, enter the extension for Phone 1. Hearing the opening greeting means that the port is configured correctly.

Step 4 Confirm that Phone 1 rings and that you hear a ringback tone on Phone 2. Hearing a ringback tone means that Cisco Unity correctly released the call and transferred it to Phone 1.

Step 5 Leaving Phone 1 unanswered, confirm that the state of the port handling the call changes to "Idle." This state means that release transfer is successful.

Step 6 Confirm that, after the number of rings that the phone system is set to wait, the call is forwarded to Cisco Unity and that you hear the greeting for the test subscriber. Hearing the greeting means that the phone system forwarded the unanswered call and the call-forward information to Cisco Unity, which correctly interpreted the information.

Step 7 On the Status Monitor, note which port handles this call.

Step 8 Leave a message for the test subscriber and hang up Phone 2.

Step 9 On the Status Monitor, confirm that the state of the port handling the call changes to "Idle." This state means that the port was successfully released when the call ended.

Step 10 Confirm that the MWI on Phone 1 is activated. The activated MWI means that the phone system and Cisco Unity are successfully integrated for turning on MWIs.

To Test Listening to Messages

Step 1 From Phone 1, enter the internal pilot number for Cisco Unity.

Step 2 When asked for your password, enter the default password. Hearing the request for your password means that the phone system sent the necessary call information to Cisco Unity, which correctly interpreted the information.

Step 3 Confirm that you hear the recorded voice name for the test subscriber (if you did not record a voice name for the test subscriber, you will hear the extension number for Phone 1). Hearing the voice name means that Cisco Unity correctly identified the subscriber by the extension.

Step 4 When asked whether you want to listen to your messages, press **1**.

Step 5 After listening to the message, press **3** to delete the message.

Step 6 Confirm that the MWI on Phone 1 is deactivated. The deactivated MWI means that the phone system and Cisco Unity are successfully integrated for turning off MWIs.

Step 7 Hang up Phone 1.

Step 8 On the Status Monitor, confirm that the state of the port handling the call changes to “Idle.” This state means that the port was successfully released when the call ended.

To Delete the Test Subscriber

Step 1 In the Cisco Unity Administrator, go to the **Subscribers** > **Subscribers** > **Profile** page.

If the name of the test subscriber is not displayed, click the **Find** icon (the magnifying glass) in the title bar, then click **Find**, and select the name of the test subscriber in the list that appears.

Step 2 In the title bar, click the **Delete Subscriber** icon (the X).

Step 3 Click **Delete**.

Integrating a Secondary Server for Cisco Unity Failover

The Cisco Unity failover feature enables a secondary server to provide voice messaging services when the primary server becomes inactive. For information on installing a secondary server for failover, refer to the applicable Cisco Unity installation guide, available at http://www.cisco.com/en/US/products/sw/voicesw/ps2237/prod_installation_guides_list.html.

For information on failover, refer to the *Cisco Unity Failover Configuration and Administration Guide*. The Domino version of the guide is available at http://www.cisco.com/univercd/cc/td/doc/product/voice/c_unity/fail/fail401/dom/index.htm. The Exchange version of the guide is available at http://www.cisco.com/univercd/cc/td/doc/product/voice/c_unity/fail/fail401/ex/index.htm.

Requirements

The following components are required to integrate a secondary server:

Phone System

- A serial data port for the data link.
- A data splitter unit to split the single data link into two serial cables.
- Two additional RS-232 serial cables (to be used with the serial cable from the integration of the primary server). With the three serial cables, connect one from the data port in the phone system to the data splitter unit; connect the second from the data splitter unit to the serial port on the primary server; and connect the third from the data splitter unit to the serial port on the secondary server.

Cisco Unity Server

- One secondary server for each primary server installed and ready for the integration, as described in the applicable Cisco Unity installation guide and earlier in this integration guide.
- The applicable cable configuration for each analog voice messaging port to simultaneously connect the phone system to the corresponding ports on both the primary and the secondary servers. For example, connect port 1 on the phone system with both port 1 on the primary server and port 1 on the secondary server.
- A license that enables failover.

Integration Description

The phone system uses a data link to send call information to the primary and secondary servers. The data splitter unit splits the single serial cable into two serial cables, enabling the data link to connect to the primary and secondary servers. The analog voice messaging lines from the phone system provide voice connectivity to the primary and secondary servers. Figure 2 shows the required connections.

Figure 2 Connections Between the Phone System and Cisco Unity Servers

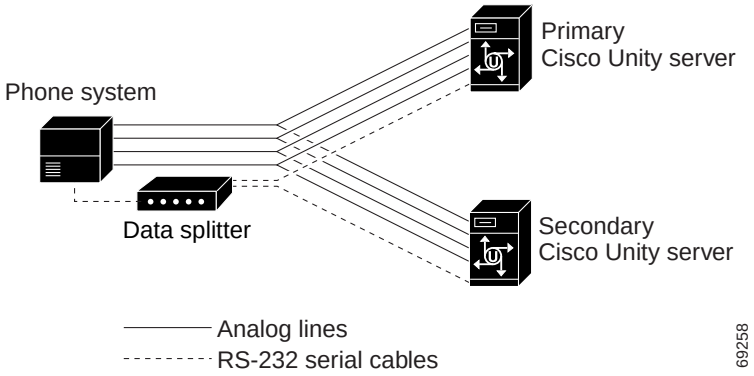

The primary and secondary servers act in the following manner:

- When the primary server is operating normally, the secondary server is inactive.
- When the primary server becomes inactive, the secondary server becomes active.
- When the primary server becomes active again, the secondary server becomes inactive.

Setting Up the Secondary Server for Failover

Do the following procedure to integrate the secondary server.

To Set Up the Secondary Server for Failover

Step 1 Install a secondary server with the same configuration as the primary server. For installation instructions, refer to the applicable Cisco Unity installation guide.

Step 2 Make all voice connections from the phone system to the corresponding ports on both the primary server and the secondary server. For example, connect port 1 from the phone system with port 1 on both the primary and the secondary servers.

Step 3 Connect one serial cable from the serial port on the phone system to the data splitter unit.

Step 4 Connect the remaining two serial cables to the two serial ports on the data splitter unit. Then connect one serial cable to the serial port on the primary server and the other serial cable to the serial port on the secondary server.

Step 5 On the Windows Start menu of the secondary server, click **Programs** > **Cisco Unity** > **Manage Integrations**. The UTIM window appears.

Step 6 On the Integration menu of the UTIM window, click **New**. The Telephony Integration Setup Wizard appears.

Step 7 Enter the settings to match the integration settings on the primary server.

Note We recommend not reassigning any unassigned subscribers and call handlers to the new integration, if you are asked by the wizard. Failover replication will automatically assign the correct integration.

Step 8 At the prompt to restart the Cisco Unity services, click **Yes**.

Note When restarting the Cisco Unity services, use the UTIM prompt instead of the Cisco Unity icon in the Windows taskbar. The taskbar icon does not restart all of the Cisco Unity services.

Step 9 After Cisco Unity restarts, on the Windows Start menu of the Cisco Unity server, click **Programs** > **Cisco Unity** > **Manage Integrations**. UTIM appears.

Step 10 In the left pane of the UTIM window, click the phone system integration that you created in Step 6.

Step 11 For Cisco Unity 4.0 and 4.1, continue to Step 12.

For Cisco Unity 4.2 and later, do the following substeps.

a. In the right pane, click **Properties**.

b. On the Integration tab, compare the setting of the Integration ID field for the secondary server to the setting of the Integration ID field for the primary server.

c. If the integration IDs of the phone system on the primary and secondary server are the same, continue to Step 12.

If the integration IDs of the phone system on the primary and secondary servers are different, on the secondary server, click **Modify Integration ID**.

d. When cautioned that subscribers associated with the current Integration ID setting will not be automatically associated with the new Integration ID setting, click **OK**.

e. In the Modify Integration ID dialog box, in the Enter New Integration ID field, enter the Integration ID setting for the phone system on the primary server and click **OK**.

f. Click **Save**.

g. At the prompt to restart the Cisco Unity services, click **No**.

h. In the left pane, click the phone system integration that you created in Step 6.

Step 12 In the right pane of the UTIM window, click the **Ports** tab.

Step 13 Enter the port settings to match the port settings on the primary server.

Caution In programming the phone system, do not send calls to voice messaging ports in Cisco Unity that cannot answer calls (voice messaging ports that are not set to Answer Calls). For example, if a voice messaging port is set only to Dialout MWI, do not send calls to it.

Step 14 Click **Save**.

Step 15 Exit UTIM.

Step 16 Click **Programs** > **Cisco Unity** > **Edit Switch Utility**.

Step 17 In the Switch Configuration Editor window, in the Manufacturer field, click **Intecom**.

Step 18 In the Model field, click **S80 B1**.

Step 19 Click **Edit**.

Step 20 In the Switch Configuration dialog box, click the **Incoming Calls** tab.

Step 21 In the Call Rings field, enter **3** and click **OK**.

Step 22 In the Switch Configuration Editor dialog box, click **Exit**.

Step 23 On the Windows Start menu, click **Run**.

Step 24 Enter **Regedit** and click **OK**.

Caution Changing the wrong registry key or entering an incorrect value can cause the server to malfunction. Before you edit the registry, confirm that you know how to restore it if a problem occurs. (Refer to the “Restoring” topics in Registry Editor Help.) If you have any questions about changing registry key settings, contact Cisco TAC.

Step 25 If you do not have a current backup of the registry, click **Registry** > **Export Registry File**, and save the registry settings to a file.

Step 26 Expand the key HKEY_LOCAL_MACHINE\Software\Active Voice\Miu\1.0\Initialization.

Step 27 Double-click **New Call Delay on Inactive Backup Server**.

Step 28 In the Edit DWORD Value dialog box, in the Value Data field, enter **0**, and click **OK**.

Step 29 Close the Registry Editor.

Step 30 Restart the Cisco Unity server.

No changes to the hunt group programming on the phone system are necessary.

Changing the Settings for an Existing Integration

After the integration is set up, if you want to change any of its settings (for example, to add or remove voice messaging ports for an integration), do the following procedure.

To Change the Settings for an Integration

Step 1 On the Cisco Unity server, on the Windows Start menu, click **Programs** > **Cisco Unity** > **Manage Integrations**. The UTIM window appears.

Step 2 In the left pane, double-click **Unity Server**. The existing integrations appear.

Step 3 Click the integration you want to modify.

Step 4 In the right pane, click the name of the cluster, phone system, or PIMG unit (depending on your integration) for the integration.

Step 5 In the right pane, click the applicable tab for the integration.

Step 6 Enter new settings in the fields that you want to change.

Caution If you are adding or removing voice messaging ports, make sure you change the settings for the individual ports so that there are an appropriate number of ports set to answer calls and an appropriate number of ports set to dial out.

Step 7 In the UTIM window, click **Save**.

Step 8 If prompted, restart the Cisco Unity services.

Deleting an Existing Integration

If you want to delete an existing integration (for example, you have replaced the phone system with which Cisco Unity originally integrated), do the following procedure.

To Delete an Existing Integration

Step 1 On the Cisco Unity server, on the Windows Start menu, click **Programs** > **Cisco Unity** > **Manage Integrations**. The UTIM window appears.

Step 2 In the left pane, double-click **Unity Server**. The existing integrations appear.

Step 3 Click the integration that you want to delete.

Step 4 On the Integration menu, click **Delete**.

Step 5 Follow the on-screen instructions to assign the subscribers of the deleted phone system integration to another phone system integration.

Step 6 At the prompt to restart the Cisco Unity services, click **Yes**. The Cisco Unity services restart.

Alternatively, you can restart the Cisco Unity services in UTIM on the Tools menu by clicking **Restart Cisco Unity**.

Step 7 If the integration you deleted used voice cards, remove the voice cards from the Cisco Unity server.

Appendix: Using Alternate Extensions and MWIs

Alternate Extensions

In addition to the "primary" extension that you specify for subscribers, you can assign subscribers up to nine alternate extensions. (The primary extension is the one that you assign to each subscriber when you create his or her subscriber account; it is listed on the Subscribers > Subscribers > Profile page.)

Reasons to Use Alternate Extensions

There are several reasons that you may want to specify alternate extensions for subscribers. For example, if you have more than one Cisco Unity server that accesses a single, corporate-wide directory, you may want to use alternate extensions to simplify addressing messages to subscribers at the different locations. With alternate extensions, the number that a subscriber uses when addressing a message to someone at another location can be the same number that the subscriber dials when calling. You may also want to use alternate extensions to:

- Handle multiple line appearances on subscriber phones.
- Offer easy message access on direct calls from a cell phone, home phone, or phone at an alternate work site (assuming that the phone number is passed along to Cisco Unity from these other phone systems). In addition, when such phones are used as alternate extensions, and are set to forward to Cisco Unity, callers can listen to the subscriber greeting, and leave messages for the subscriber just as they would when dialing the primary extension for the subscriber.

Tip To reduce the number of requests from subscribers who want alternate extensions set up for multiple cell phones, home phones, and other phones, give subscribers class of service (COS) rights to specify their own set of alternate extensions. (See the Subscribers > Class of Service > Profile page.) With proper COS rights, a subscriber can specify up to five alternate extensions in the Cisco Unity Assistant—in addition to the nine that you can specify on the Subscribers > Alternate Extensions page in the Cisco Unity Administrator.

- Enable URL-based extensions in Cisco Unity for an integration with a SIP phone system.

How Alternate Extensions Work

Before you set up alternate extensions, review the following list for information on how alternate extensions work:

- Alternate extensions cannot exceed 30 characters in length. By default, each administrator-defined alternate extension must be at least 3 characters in length, while subscriber-defined alternate extensions must be at least 10 characters.

You can use the Advanced Settings tool in Tools Depot to specify a minimum extension length for the extensions entered in the Cisco Unity Administrator and the Cisco Unity Assistant. Refer to the Advanced Settings Tool Help for details on using the settings. Respectively, the settings are Administration—Set the Minimum Length for Locations, and Administration—Set the Minimum Length for Subscriber-Defined Alternate Extensions.

- You can control whether subscribers can use the Cisco Unity Assistant to view the alternate extensions that you specify in the Cisco Unity Administrator. To do so, see the Subscribers > Class of Service > Profile page. The Subscriber-Defined Alternate Extension table displays the alternate extensions that the subscriber adds.
- Neither the Cisco Unity Administrator nor the Cisco Unity Assistant will accept an extension that is already assigned to another subscriber (either as a primary or alternate extension), or to a public distribution list, call handler, directory handler, or interview handler. Cisco Unity verifies that each alternate extension is unique—up to the dialing domain level, if applicable—before allowing either an administrator or a subscriber to create it.
- All alternate extensions use the same transfer settings as the primary extension.
- In many cases, Cisco Unity can activate a message waiting indicator (MWI) for an alternate extension. However, depending on the phones and phone systems involved, some additional phone system programming may be required to set this up.

Setting Up Alternate Extensions

Do the applicable procedure to add, modify, or delete alternate extensions:

- To Add Administrator-Defined Alternate Extensions, page 20
- To Modify or Delete Alternate Extension(s), page 21

To Add Administrator-Defined Alternate Extensions

Step 1 In the Cisco Unity Administrator, go to any **Subscribers > Alternate Extensions** page.

Step 2 In the Administrator-Defined Alternate Extensions table, enter an extension in any row. When entering characters in the Alternate Extensions table, consider the following:

- You can enter an extension up to 30 characters in length. (SIP integrations can use up to 30 alphanumeric characters.)
- Each extension must be unique—up to the dialing domain level, if applicable.
- Enter digits 0 through 9. Do not use spaces, dashes, or parentheses.
- For SIP integrations, you can also enter a valid alias for a SIP URL. For example, if the URL is SIP:aabade@cisco.com, enter aabade. Do not use spaces.
- Rows are numbered as a convenience. You can enter alternate extensions in any order, and you can have blank rows.

Step 3 Repeat Step 2 as necessary.

Step 4 Click the **Save** icon. Alternate extensions are enabled for all rows in the table.

To Modify or Delete Alternate Extension(s)

Step 1 In the Cisco Unity Administrator, go to any **Subscribers** > **Alternate Extensions** page.

Step 2 Do any of the following:

- To modify an extension, change the extension in the Alternate Extensions table.
- To delete extensions, check the check boxes next to the alternate extensions that you want to delete.
- To remove all alternate extensions listed in the table, click **Select All**.

Step 3 Click the **Save** icon.

Step 4 Repeat Step 2 and Step 3 as necessary.

Note You can run the Cisco Unity Bulk Import wizard when you want to add alternate extensions for multiple subscribers at once. When you do, the Cisco Unity Bulk Import wizard appends the new alternate extensions to the existing table of alternate extensions, beginning with the first blank row.

Alternate MWIs

You can set up Cisco Unity to activate alternate MWIs when you want a new message for a subscriber to activate the MWIs at up to 10 extensions. For example, a message left at extension 1001 can activate the MWIs on extensions 1001 and 1002.

Cisco Unity uses MWIs to alert the subscriber to new voice messages. MWIs are not used to indicate new e-mail, fax, or return receipt messages.

Setting Up Alternate MWIs

Cisco Unity can activate alternate MWIs. Note that depending on the phones and phone systems, some additional phone system programming may be necessary. Refer to the installation guide for the phone system.

To enable alternate MWIs for extensions, do the following procedure for each subscriber who needs alternate MWIs.

To Set Up Alternate MWIs for Extensions

Step 1 In the Cisco Unity Administrator, go to the applicable **Subscribers** > **Subscribers** > **Messages** page.

Step 2 Confirm that the **Use MWI for Message Notification** check box is checked.

Step 3 Click the **Add** button located beneath the MWI Extensions table to add a row to the table. By default, the first row in the table contains an “X” to indicate the primary extension assigned to a subscriber. If you want one more extension and do not need to activate the MWI on the primary extension, you can also modify the first row.

Step 4 Enter the applicable extension in the **Extension** field of the table. MWIs are automatically enabled for all rows in the table. When entering characters in the MWI Extensions table, consider the following:

- Enter digits 0 through 9. Do not use spaces, dashes, or parentheses.
- Enter , (comma) to insert a one-second pause.
- Enter # and * to correspond to the # and * keys on the phone.

Step 5 Click the **Save** icon.

Step 6 Repeat Step 3 through Step 5 as necessary.

Note You can run the Cisco Unity Bulk Import wizard when you want to set up alternate MWIs for multiple subscribers at once.

To change or delete alternate MWIs for extensions, do the following procedure.

To Modify or Delete Alternate MWIs

Step 1 In the Cisco Unity Administrator, go to the applicable **Subscribers** > **Subscribers** > **Messages** page.

Step 2 Do either of the following:

- To modify an extension, change the extension in the MWI Extensions table.
- To delete extensions, check the check boxes next to the rows that you want to delete in the MWI Extensions table, and then click the **Delete** button.

Step 3 Click the **Save** icon.

Step 4 Repeat Step 2 and Step 3 as necessary.

Appendix: Documentation and Technical Assistance

Conventions

The *Intecom IBX S/80 Serial Integration Guide for Cisco Unity 4.0* uses the following conventions.

Table 8 Intecom IBX S/80 Serial Integration Guide for Cisco Unity 4.0 Conventions

Convention	Description
boldfaced text	Boldfaced text is used for: • Key and button names. (Example: Click **OK.**) • Information that you enter. (Example: Enter **Administrator** in the User Name box.)
< > (angle brackets)	Angle brackets are used around parameters for which you supply a value. (Example: In the Command Prompt window, enter **ping <IP address>**.)
- (hyphen)	Hyphens separate keys that must be pressed simultaneously. (Example: Press **Ctrl-Alt-Delete.)**
> (right angle bracket)	A right angle bracket is used to separate selections that you make: • On menus. (Example: On the Windows Start menu, click **Settings** > **Control Panel** > **Phone and Modem Options**.) • In the navigation bar of the Cisco Unity Administrator. (Example: Go to the **System** > **Configuration** > **Settings** page.)
[x] (square brackets)	Square brackets enclose an optional element (keyword or argument). (Example: [reg-e164])
[x | y] (vertical line)	Square brackets enclosing keywords or arguments separated by a vertical line indicate an optional choice. (Example: [transport tcp | transport udp])
{x | y} (braces)	Braces enclosing keywords or arguments separated by a vertical line indicate a required choice. (Example: {tcp | udp})

The *Intecom IBX S/80 Serial Integration Guide for Cisco Unity 4.0* also uses the following conventions:

Note Means *reader take note*. Notes contain helpful suggestions or references to material not covered in the document.

Caution Means *reader be careful*. In this situation, you might do something that could result in equipment damage or loss of data.

For descriptions and URLs of Cisco Unity documentation on Cisco.com, see the *About Cisco Unity Documentation*. The document is shipped with Cisco Unity and is available at http://www.cisco.com/univercd/cc/td/doc/product/voice/c_unity/about/aboutdoc.htm.

Obtaining Documentation

Cisco documentation and additional literature are available on Cisco.com. Cisco also provides several ways to obtain technical assistance and other technical resources. These sections explain how to obtain technical information from Cisco Systems.

Cisco.com

You can access the most current Cisco documentation at this URL:

http://www.cisco.com/techsupport

You can access the Cisco website at this URL:

http://www.cisco.com

You can access international Cisco websites at this URL:

http://www.cisco.com/public/countries_languages.shtml

Product Documentation DVD

The Product Documentation DVD is a comprehensive library of technical product documentation on a portable medium. The DVD enables you to access multiple versions of installation, configuration, and command guides for Cisco hardware and software products. With the DVD, you have access to the same HTML documentation that is found on the Cisco website without being connected to the Internet. Certain products also have .PDF versions of the documentation available.

The Product Documentation DVD is available as a single unit or as a subscription. Registered Cisco.com users (Cisco direct customers) can order a Product Documentation DVD (product number DOC-DOCDVD= or DOC-DOCDVD=SUB) from Cisco Marketplace at this URL:

http://www.cisco.com/go/marketplace/

Ordering Documentation

Registered Cisco.com users may order Cisco documentation at the Product Documentation Store in the Cisco Marketplace at this URL:

http://www.cisco.com/go/marketplace/

Nonregistered Cisco.com users can order technical documentation from 8:00 a.m. to 5:00 p.m. (0800 to 1700) PDT by calling 1 866 463-3487 in the United States and Canada, or elsewhere by calling 011 408 519-5055. You can also order documentation by e-mail at tech-doc-store-mkpl@external.cisco.com or by fax at 1 408 519-5001 in the United States and Canada, or elsewhere at 011 408 519-5001.

Documentation Feedback

You can rate and provide feedback about Cisco technical documents by completing the online feedback form that appears with the technical documents on Cisco.com.

You can submit comments about Cisco documentation by using the response card (if present) behind the front cover of your document or by writing to the following address:

Cisco Systems
Attn: Customer Document Ordering
170 West Tasman Drive
San Jose, CA 95134-9883

We appreciate your comments.

Cisco Product Security Overview

Cisco provides a free online Security Vulnerability Policy portal at this URL:

http://www.cisco.com/en/US/products/products_security_vulnerability_policy.html

From this site, you will find information about how to:

- Report security vulnerabilities in Cisco products.
- Obtain assistance with security incidents that involve Cisco products.
- Register to receive security information from Cisco.

A current list of security advisories, security notices, and security responses for Cisco products is available at this URL:

http://www.cisco.com/go/psirt

To see security advisories, security notices, and security responses as they are updated in real time, you can subscribe to the Product Security Incident Response Team Really Simple Syndication (PSIRT RSS) feed. Information about how to subscribe to the PSIRT RSS feed is found at this URL:

http://www.cisco.com/en/US/products/products_psirt_rss_feed.html

Reporting Security Problems in Cisco Products

Cisco is committed to delivering secure products. We test our products internally before we release them, and we strive to correct all vulnerabilities quickly. If you think that you have identified a vulnerability in a Cisco product, contact PSIRT:

- For Emergencies only—security-alert@cisco.com

  An emergency is either a condition in which a system is under active attack or a condition for which a severe and urgent security vulnerability should be reported. All other conditions are considered nonemergencies.

- For Nonemergencies—psirt@cisco.com

In an emergency, you can also reach PSIRT by telephone:

- 1 877 228-7302
- 1 408 525-6532

Tip We encourage you to use Pretty Good Privacy (PGP) or a compatible product (for example, GnuPG) to encrypt any sensitive information that you send to Cisco. PSIRT can work with information that has been encrypted with PGP versions 2.*x* through 9.*x*.

Never use a revoked or an expired encryption key. The correct public key to use in your correspondence with PSIRT is the one linked in the Contact Summary section of the Security Vulnerability Policy page at this URL:

http://www.cisco.com/en/US/products/products_security_vulnerability_policy.html

The link on this page has the current PGP key ID in use.

If you do not have or use PGP, contact PSIRT at the aforementioned e-mail addresses or phone numbers before sending any sensitive material to find other means of encrypting the data.

Obtaining Technical Assistance

Cisco Technical Support provides 24-hour-a-day award-winning technical assistance. The Cisco Technical Support & Documentation website on Cisco.com features extensive online support resources. In addition, if you have a valid Cisco service contract, Cisco Technical Assistance Center (TAC) engineers provide telephone support. If you do not have a valid Cisco service contract, contact your reseller.

Cisco Technical Support & Documentation Website

The Cisco Technical Support & Documentation website provides online documents and tools for troubleshooting and resolving technical issues with Cisco products and technologies. The website is available 24 hours a day, at this URL:

http://www.cisco.com/techsupport

Access to all tools on the Cisco Technical Support & Documentation website requires a Cisco.com user ID and password. If you have a valid service contract but do not have a user ID or password, you can register at this URL:

http://tools.cisco.com/RPF/register/register.do

Note Use the Cisco Product Identification (CPI) tool to locate your product serial number before submitting a web or phone request for service. You can access the CPI tool from the Cisco Technical Support & Documentation website by clicking the **Tools & Resources** link under Documentation & Tools. Choose **Cisco Product Identification Tool** from the Alphabetical Index drop-down list, or click the **Cisco Product Identification Tool** link under Alerts & RMAs. The CPI tool offers three search options: by product ID or model name; by tree view; or for certain products, by copying and pasting **show** command

output. Search results show an illustration of your product with the serial number label location highlighted. Locate the serial number label on your product and record the information before placing a service call.

Submitting a Service Request

Using the online TAC Service Request Tool is the fastest way to open S3 and S4 service requests. (S3 and S4 service requests are those in which your network is minimally impaired or for which you require product information.) After you describe your situation, the TAC Service Request Tool provides recommended solutions. If your issue is not resolved using the recommended resources, your service request is assigned to a Cisco engineer. The TAC Service Request Tool is located at this URL:

http://www.cisco.com/techsupport/servicerequest

For S1 or S2 service requests, or if you do not have Internet access, contact the Cisco TAC by telephone. (S1 or S2 service requests are those in which your production network is down or severely degraded.) Cisco engineers are assigned immediately to S1 and S2 service requests to help keep your business operations running smoothly.

To open a service request by telephone, use one of the following numbers:

Asia-Pacific: +61 2 8446 7411 (Australia: 1 800 805 227)
EMEA: +32 2 704 55 55
USA: 1 800 553-2447

For a complete list of Cisco TAC contacts, go to this URL:

http://www.cisco.com/techsupport/contacts

Definitions of Service Request Severity

To ensure that all service requests are reported in a standard format, Cisco has established severity definitions.

Severity 1 (S1)—An existing network is down, or there is a critical impact to your business operations. You and Cisco will commit all necessary resources around the clock to resolve the situation.

Severity 2 (S2)—Operation of an existing network is severely degraded, or significant aspects of your business operations are negatively affected by inadequate performance of Cisco products. You and Cisco will commit full-time resources during normal business hours to resolve the situation.

Severity 3 (S3)—Operational performance of the network is impaired, while most business operations remain functional. You and Cisco will commit resources during normal business hours to restore service to satisfactory levels.

Severity 4 (S4)—You require information or assistance with Cisco product capabilities, installation, or configuration. There is little or no effect on your business operations.

Obtaining Additional Publications and Information

Information about Cisco products, technologies, and network solutions is available from various online and printed sources.

- The *Cisco Product Quick Reference Guide* is a handy, compact reference tool that includes brief product overviews, key features, sample part numbers, and abbreviated technical specifications for many Cisco products that are sold through channel partners. It is updated twice a year and includes the latest Cisco offerings. To order and find out more about the Cisco Product Quick Reference Guide, go to this URL:

  http://www.cisco.com/go/guide

- Cisco Marketplace provides a variety of Cisco books, reference guides, documentation, and logo merchandise. Visit Cisco Marketplace, the company store, at this URL:

  http://www.cisco.com/go/marketplace/

- *Cisco Press* publishes a wide range of general networking, training and certification titles. Both new and experienced users will benefit from these publications. For current Cisco Press titles and other information, go to Cisco Press at this URL:

  http://www.ciscopress.com

- *Packet* magazine is the Cisco Systems technical user magazine for maximizing Internet and networking investments. Each quarter, Packet delivers coverage of the latest industry trends, technology breakthroughs, and Cisco products and solutions, as well as network deployment and troubleshooting tips, configuration examples, customer case studies, certification and training information, and links to scores of in-depth online resources. You can access Packet magazine at this URL:

  http://www.cisco.com/packet

- *iQ Magazine* is the quarterly publication from Cisco Systems designed to help growing companies learn how they can use technology to increase revenue, streamline their business, and expand services. The publication identifies the challenges facing these companies and the technologies to help solve them, using real-world case studies and business strategies to help readers make sound technology investment decisions. You can access iQ Magazine at this URL:

  http://www.cisco.com/go/iqmagazine

  or view the digital edition at this URL:

  http://ciscoiq.texterity.com/ciscoiq/sample/

- *Internet Protocol Journal* is a quarterly journal published by Cisco Systems for engineering professionals involved in designing, developing, and operating public and private internets and intranets. You can access the Internet Protocol Journal at this URL:

  http://www.cisco.com/ipj

- Networking products offered by Cisco Systems, as well as customer support services, can be obtained at this URL:

  http://www.cisco.com/en/US/products/index.html

- Networking Professionals Connection is an interactive website for networking professionals to share questions, suggestions, and information about networking products and technologies with Cisco experts and other networking professionals. Join a discussion at this URL:

  http://www.cisco.com/discuss/networking

- World-class networking training is available from Cisco. You can view current offerings at this URL:

  http://www.cisco.com/en/US/learning/index.html

Any Internet Protocol (IP) addresses used in this document are not intended to be actual addresses. Any examples, command display output, and figures included in the document are shown for illustrative purposes only. Any use of actual IP addresses in illustrative content is unintentional and coincidental.

© 2006 Cisco Systems, Inc. All rights reserved.