Configuring UDLD

This chapter describes how to configure the UniDirectional Link Detection (UDLD) protocol on your Catalyst 2940 switch.

Note For complete syntax and usage information for the commands used in this chapter, see the command reference for this release.

This chapter consists of these sections:

- Understanding UDLD, page 18-1
- Configuring UDLD, page 18-4
- Displaying UDLD Status, page 18-7

Understanding UDLD

UDLD is a Layer 2 protocol that enables devices connected through fiber-optic or twisted-pair Ethernet cables to monitor the physical configuration of the cables and detect when a unidirectional link exists. All connected devices must support UDLD for the protocol to successfully identify and disable unidirectional links. When UDLD detects a unidirectional link, it administratively shuts down the affected port and alerts you. Unidirectional links can cause a variety of problems, including spanning-tree topology loops.

Modes of Operation

UDLD supports two modes of operation: normal (the default) and aggressive. In normal mode, UDLD can detect unidirectional links due to misconnected interfaces on fiber-optic connections. In aggressive mode, UDLD can also detect unidirectional links due to one-way traffic on fiber-optic and twisted-pair links and to misconnected interfaces on fiber-optic links.

In normal and aggressive modes, UDLD works with the Layer 1 mechanisms to determine the physical status of a link. At Layer 1, autonegotiation takes care of physical signaling and fault detection. UDLD performs tasks that autonegotiation cannot perform, such as detecting the identities of neighbors and shutting down misconnected interfaces. When you enable both autonegotiation and UDLD, the Layer 1 and Layer 2 detections work together to prevent physical and logical unidirectional connections and the malfunctioning of other protocols.

A unidirectional link occurs whenever traffic sent by a local device is received by its neighbor but traffic from the neighbor is not received by the local device.

In normal mode, UDLD detects a unidirectional link when fiber strands in a fiber-optic interface are misconnected and the Layer 1 mechanisms do not detect this misconnection. If the interfaces are connected correctly but the traffic is one way, UDLD does not detect the unidirectional link because the Layer 1 mechanism, which is supposed to detect this condition, does not do so. In case, the logical link is considered undetermined, and UDLD does not disable the interface.

When UDLD is in normal mode, if one of the fiber strands in a pair is disconnected and autonegotiation is active, the link does not stay up because the Layer 1 mechanisms did not detect a physical problem with the link. In this case, UDLD does not take any action, and the logical link is considered undetermined.

In aggressive mode, UDLD detects a unidirectional link by using the previous detection methods. UDLD in aggressive mode can also detect a unidirectional link on a point-to-point link on which no failure between the two devices is allowed. It can also detect a unidirectional link when one of these problems exists:

- On fiber-optic or twisted-pair links, one of the interfaces cannot send or receive traffic.
- On fiber-optic or twisted-pair links, one of the interfaces is down while the other is up.
- One of the fiber strands in the cable is disconnected.

In these cases, UDLD shuts down the affected interface.

In a point-to-point link, UDLD hello packets can be considered as a heart beat whose presence guarantees the health of the link. Conversely, the loss of the heart beat means that the link must be shut down if it is not possible to re-establish a bidirectional link.

If both fiber strands in a cable are working normally from a Layer 1 perspective, UDLD in aggressive mode determines whether those fiber strands are connected correctly and whether traffic is flowing bidirectionally between the correct neighbors. This check cannot be performed by autonegotiation because autonegotiation operates at Layer 1.

Methods to Detect Unidirectional Links

UDLD operates by using two mechanisms:

- Neighbor database maintenance

  UDLD learns about other UDLD-capable neighbors by periodically sending a hello packet (also called an advertisement or probe) on every active interface to keep each device informed about its neighbors.

  When the switch receives a hello message, it caches the information until the age time (hold time or time-to-live) expires. If the switch receives a new hello message before an older cache entry ages, the switch replaces the older entry with the new one.

  Whenever an interface is disabled and UDLD is running, whenever UDLD is disabled on an interface, or whenever the switch is reset, UDLD clears all existing cache entries for the interfaces affected by the configuration change. UDLD sends at least one message to inform the neighbors to flush the part of their caches affected by the status change. The message is intended to keep the caches synchronized.

- Event-driven detection and echoing

  UDLD relies on echoing as its detection mechanism. Whenever a UDLD device learns about a new neighbor or receives a resynchronization request from an out-of-sync neighbor, it restarts the detection window on its side of the connection and sends echo messages in reply. Because this behavior is the same on all UDLD neighbors, the sender of the echoes expects to receive an echo in reply.

  If the detection window ends and no valid reply message is received, the link might shut down, depending on the UDLD mode. When UDLD is in normal mode, the link might be considered undetermined and might not be shut down. When UDLD is in aggressive mode, the link is considered unidirectional, and the interface is shut down.

If UDLD in normal mode is in the advertisement or in the detection phase and all the neighbor cache entries are aged out, UDLD restarts the link-up sequence to resynchronize with any potentially out-of-sync neighbors.

If you enable aggressive mode when all the neighbors of a port have aged out either in the advertisement or in the detection phase, UDLD restarts the link-up sequence to resynchronize with any potentially out-of-sync neighbor. UDLD shuts down the port if, after the fast train of messages, the link state is still undetermined.

Figure 18-1 shows an example of a unidirectional link condition.

Figure 18-1 UDLD Detection of a Unidirectional Link

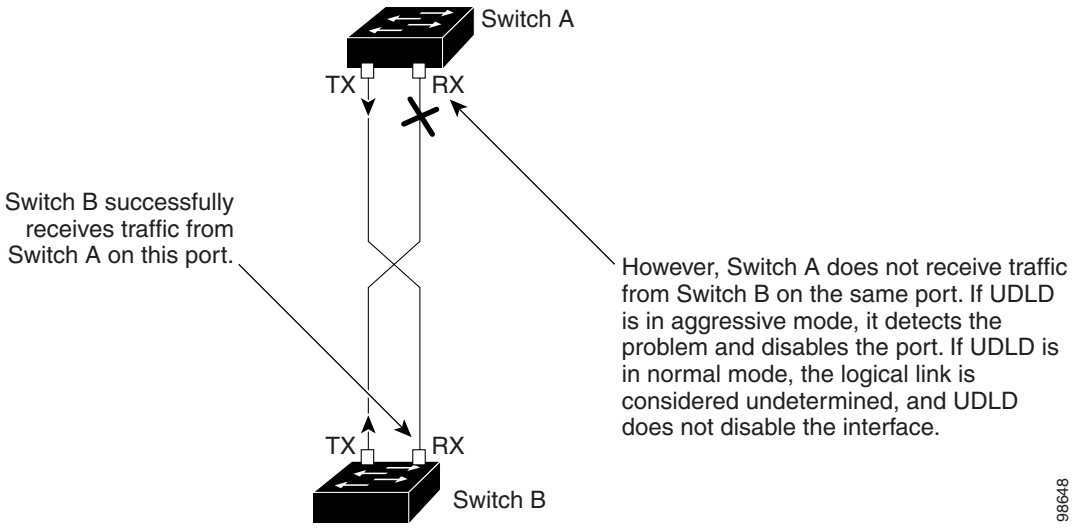

Configuring UDLD

This section describes how to configure UDLD on your switch. It contains this configuration information:

- Default UDLD Configuration, page 18-4
- Configuration Guidelines, page 18-4
- Enabling UDLD Globally, page 18-5
- Enabling UDLD on an Interface, page 18-5
- Resetting an Interface Shut Down by UDLD, page 18-6

Default UDLD Configuration

Table 18-1 shows the default UDLD configuration.

Table 18-1 Default UDLD Configuration

Feature	Default Setting
UDLD global enable state	Globally disabled
UDLD per-interface enable state for fiber-optic media	Disabled on all Ethernet fiber-optic interfaces
UDLD per-interface enable state for twisted-pair (copper) media	Disabled on all Ethernet 10/100 and 1000BASE-TX interfaces
UDLD aggressive mode	Disabled

Configuration Guidelines

These are the UDLD configuration guidelines:

- A UDLD-capable interface also cannot detect a unidirectional link if it is connected to a UDLD-incapable port of another switch.
- When configuring the mode (normal or aggressive), make sure that the same mode is configured on both sides of the link.

Enabling UDLD Globally

Beginning in privileged EXEC mode, follow these steps to enable UDLD in the aggressive or normal mode and to set the configurable message timer on all fiber-optic interfaces on the switch:

	Command	Purpose
Step 1	**configure terminal**	Enter global configuration mode.
Step 2	**udld** {**aggressive** | **enable** | **message time** *message-timer-interval*}	Specify the UDLD mode of operation: • **aggressive**—Enables UDLD in aggressive mode on all fiber-optic interfaces. • **enable**—Enables UDLD in normal mode on all fiber-optic interfaces on the switch. UDLD is disabled by default. An individual interface configuration overrides the setting of the **udld enable** global configuration command. For more information about aggressive and normal modes, see the "Modes of Operation" section on page 18-1. • **message time** *message-timer-interval*—Configures the period of time between UDLD probe messages on ports that are in the advertisement phase and are determined to be bidirectional. The range is from 7 to 90 seconds. **Note** This command affects fiber-optic interfaces only. Use the **udld** interface configuration command to enable UDLD on other interface types. For more information, see the "Enabling UDLD on an Interface" section on page 18-5.
Step 3	**end**	Return to privileged EXEC mode.
Step 4	**show udld**	Verify your entries.
Step 5	**copy running-config startup-config**	(Optional) Save your entries in the configuration file.

To disable UDLD globally, use the **no udld enable** global configuration command to disable normal mode UDLD on all fiber-optic ports. Use the **no udld aggressive** global configuration command to disable aggressive mode UDLD on all fiber-optic ports.

Enabling UDLD on an Interface

Beginning in privileged EXEC mode, follow these steps to enable UDLD in the aggressive or normal mode on an interface:

	Command	Purpose
Step 1	**configure terminal**	Enter global configuration mode.
Step 2	**interface** *interface-id*	Specify the interface to be enabled for UDLD, and enter interface configuration mode.

	Command	Purpose
Step 3	**udld port** [**aggressive**]	Specify the UDLD mode of operation: • (Optional) **aggressive**— Enables UDLD in aggressive mode on the specified interface. UDLD is disabled by default. If you do not enter the **aggressive** keyword, the switch enables UDLD in normal mode. On a fiber-optic interface, this command overrides the **udld enable** global configuration command setting. For more information about aggressive and normal modes, see the "Modes of Operation" section on page 18-1.
Step 4	**end**	Return to privileged EXEC mode.
Step 5	**show udld** *interface-id*	Verify your entries.
Step 6	**copy running-config startup-config**	(Optional) Save your entries in the configuration file.

To disable UDLD on a non-fiber-optic interface, use the **no udld port** interface configuration command.

Note On fiber-optic interfaces, the **no udld port** command reverts the interface configuration to the **udld enable** global configuration command setting.

Use the **no udld port** interface configuration command to disable UDLD on a fiber-optic interface

Resetting an Interface Shut Down by UDLD

Beginning in privileged EXEC mode, follow these steps to reset all interfaces shut down by UDLD:

	Command	Purpose
Step 1	**udld reset**	Reset all interfaces shut down by UDLD.
Step 2	**show udld**	Verify your entries.
Step 3	**copy running-config startup-config**	(Optional) Save your entries in the configuration file.

You can also bring up the interface by using these commands:

- The **shutdown** interface configuration command followed by the **no shutdown** interface configuration command restarts the disabled interface.
- The **no udld** {**aggressive** | **enable**} global configuration command followed by the **udld** {**aggressive** | **enable**} global configuration command re-enables UDLD globally.
- The **no udld port** interface configuration command followed by the **udld port** [**aggressive**] interface configuration command re-enables UDLD on the specified interface.
- The **errdisable recovery cause udld** global configuration command enables the timer to automatically recover from the UDLD error-disabled state, and the **errdisable recovery interval** *interval* global configuration command specifies the time to recover from the UDLD error-disabled state.

Displaying UDLD Status

To display the UDLD status for the specified interface or for all interfaces, use the **show udld** [*interface-id*] privileged EXEC command.

For detailed information about the fields in the display, see the command reference for this release.