Installing the Cisco ONS 15454 Four-Shelf and Zero-Shelf Bay Assembly

This guide describes how to unpack and install the Cisco ONS 15454 four-shelf and zero-shelf bay assembly. Because it is a complete system, installation simply requires you to remove the unit from the shipping pallet, move the unit into place, secure it, and supply power and ground attachment. Refer to the Cisco ONS 15454 user documentation for component-specific installation and replacement procedures. Figure 3 on page 7 shows a four-shelf bay assembly.

This guide includes the following sections:

- Safety Recommendations
- Included Material
- Recommended Material
- Unpacking Instructions
- Installation Instructions
- Cabling Illustrations
- Fuse and Alarm Panel Wiring
- Ground and Power
- Optional Kits

Obtaining Optical Networking Information

This section contains information that is specific to optical networking products. For information that pertains to all of Cisco, refer to the Obtaining Documentation, Obtaining Support, and Security Guidelines section.

Americas Headquarters:
Cisco Systems, Inc., 170 West Tasman Drive, San Jose, CA 95134-1706 USA

© 2007 Cisco Systems, Inc. All rights reserved.

Where to Find Safety and Warning Information

For safety and warning information, refer to the *Cisco Optical Transport Products Safety and Compliance Information* document that accompanied the product. This publication describes the international agency compliance and safety information for the Cisco ONS 15454 system. It also includes translations of the safety warnings that appear in the ONS 15454 system documentation.

Cisco Optical Networking Product Documentation CD-ROM

Optical networking-related documentation, including Cisco ONS 15xxx product documentation, is available in a CD-ROM package that ships with your product. The Optical Networking Product Documentation CD-ROM is updated periodically and may be more current than printed documentation.

Obtaining Documentation, Obtaining Support, and Security Guidelines

For information on obtaining documentation, obtaining support, providing documentation feedback, security guidelines, and also recommended aliases and general Cisco documents, see the monthly *What's New in Cisco Product Documentation*, which also lists all new and revised Cisco technical documentation, at:

http://www.cisco.com/en/US/docs/general/whatsnew/whatsnew.html

Cisco ONS 15454 Four-Shelf and Zero-Shelf Bay Assembly Overview

The Cisco ONS 15454 four-shelf and zero-shelf bay assemblies provide a dual-feed, prewired TPA-type fuse and alarm panel, two vertical fiber ducts, and two 5-inch (12.7-cm) vertical extenders and extender bases. The four-shelf bay assembly also provides a preinstalled, four-shelf configuration that includes four ONS 15454 shelf assemblies with electrical interface assembly (EIA) panels or EIA blank cover panels.

Figure 1 shows the rear view of a High-Density BNC EIA and Figure 2 shows the rear view of a MiniBNC EIA.

Figure 1 Rear View of High-Density BNC EIA

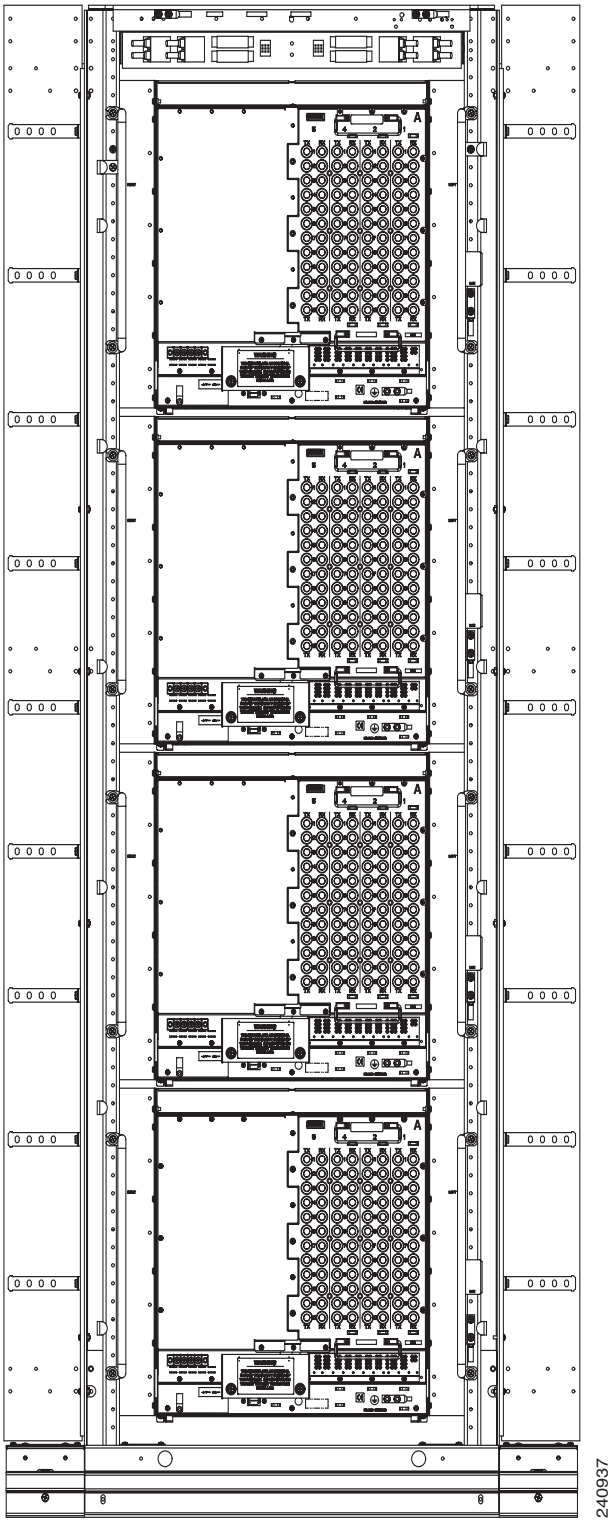

The ONS 15454 high-density BNC EIA supports 48 DS-3 circuits on each side of the ONS 15454 (48 transmit and 48 receive connectors). If you install BNC EIAs on both sides of the unit, the ONS 15454 hosts up to 96 circuits. The high-density BNC EIA supports Trompeter UCBJ224 (75-ohm) 4-leg connectors (King or ITT are also compatible). Use straight connectors on RG-59/U cable to connect to the high-density BNC EIA. Cisco recommends these cables for connection to a patch panel; they are designed for long runs. You can use high-density BNC EIAs for DS-3 (including the DS3XM-6 and DS3XM-12) or EC-1 cards. Figure 1 shows the rear view of a high-density BNC EIA.

Figure 2 Rear View of MiniBNC EIA

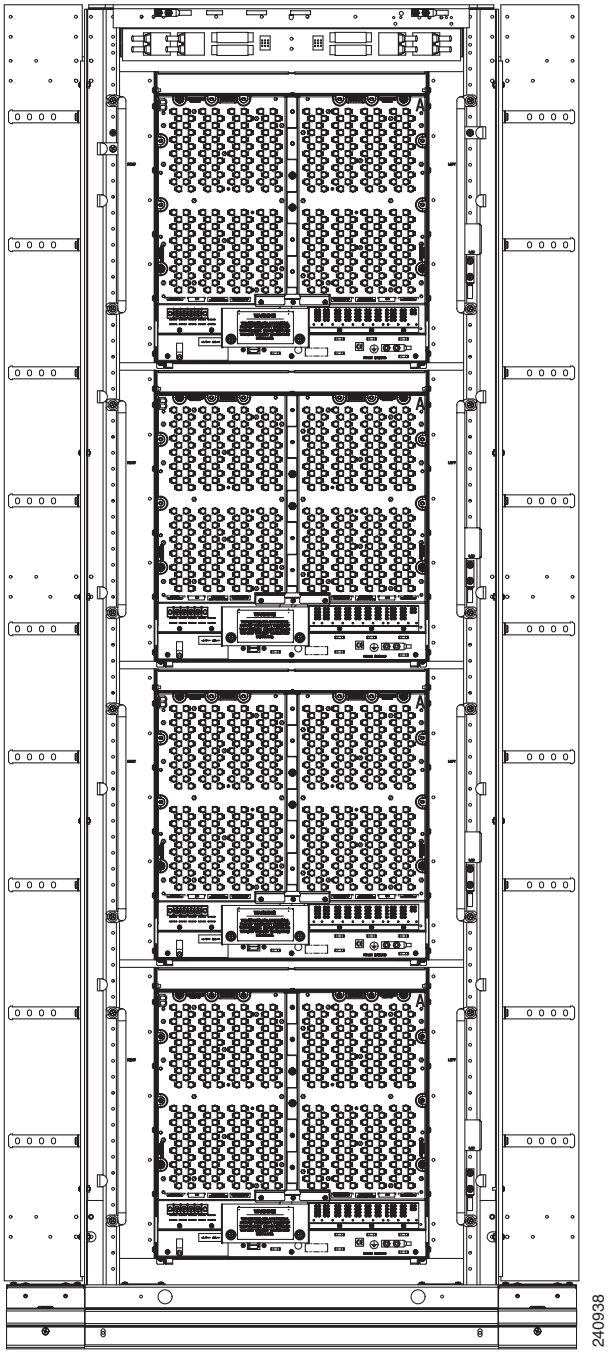

The ONS 15454 MiniBNC EIA supports a maximum of 192 transmit and receive DS-3 connections, 96 per side (A and B) through 192 miniBNC connectors on each side. If you install BNC EIAs on both sides of the unit, the ONS 15454 hosts up to 192 circuits. The MiniBNC EIAs are designed to support DS-3 and EC-1 signals. Figure 2 shows the rear view of a MiniBNC EIA.

The MiniBNC EIA supports the following cards:

- DS3-12, DS3N-12
- DS3i-N-12
- DS3-12E, DS3N-12E
- EC1-12
- DS3XM-6
- DS3XM-12
- DS3/EC1-48

MiniBNCs support available high-density cards in unprotected and 1:N protection (where N < 2) protection groups.

For more information on High-Density BNC EIA and MiniBNC EIA, refer sections *High-Density BNC EIA* and *MiniBNC EIA* in *Chapter 1, Shelf and Backplane Hardware* in *Cisco ONS 15454 Reference Manual*.

Figure 3 Four-Shelf Bay Assembly

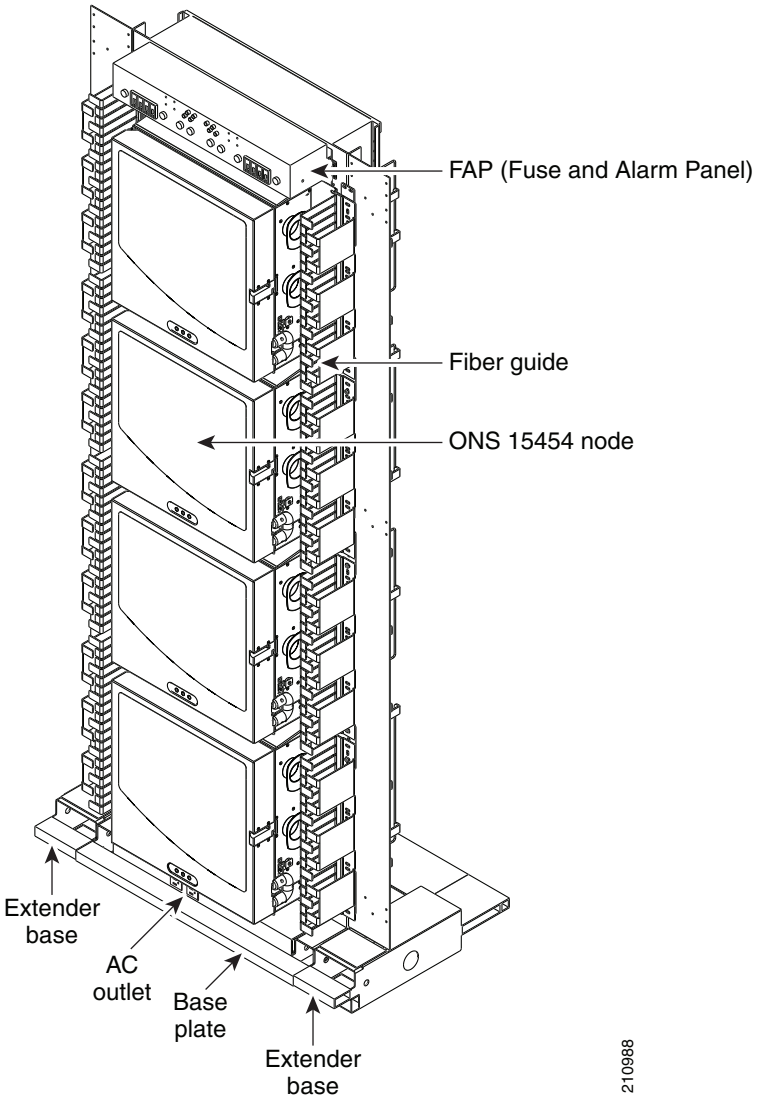

Caution The AC outlet at the base of the shelf should be protected by a 20-A breaker maximum.

Note An AC outlet is provided on the front of the base if 110-VAC powering is needed. Wiring for AC power must be performed by an electrician.

Figure 4 shows how the rack is assembled.

Figure 4 Rack Assembly

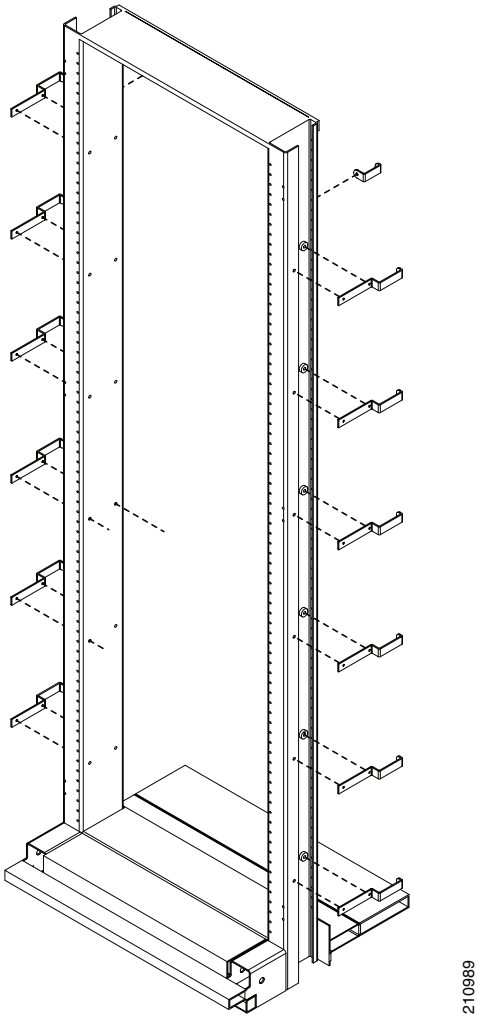

Safety Recommendations

The following guidelines will help to ensure your safety and protect the equipment. This list does not include every potentially hazardous situation.

- Never attempt to lift an object that might be too heavy for you to lift by yourself.
- Always disconnect the power source and unplug all power cables before installing or removing the bay assembly.
- Carefully examine your work area for possible hazards such as moist floors, ungrounded power extension cables, and missing power grounds.
- When using equipment such as a forklift or pallet jack to move the bay assembly to another location, use only moving equipment that is capable of preventing the bay assembly from tipping.
- Do not wear loose clothing, jewelry (including rings and chains), or other items that could get caught in the bay assembly.
- Do not work alone if potentially hazardous conditions exist.

Included Material

The zero-shelf and four-shelf bay assemblies ship with the following materials:

- TPA fuse
- Electrical tape
- Anti-oxidant compound
- Lacing twine
- Tubing
- Emery cloth
- Tags
- Fishe-paper
- Floor cutout template
- ESD wrist strap
- Unpacking and installation documentation

In addition to the list above, the four-shelf bay assembly also ships with the following materials:

- Hex screws
- Allen tool
- Plastic rear cover
- Rear cover support
- Right and left fiber channels
- Phillips head custom screws
- Touch-up paint
- This installation document

Recommended Material

Because most of the installation is complete when you receive the system, the bay assembly requires little installation material. The most significant tasks are removing the packaging from the bay assembly and removing the bay assembly from the shipping pallet. Because the actual installation of the bay assembly in each facility is done according to local site practice, your material needs may vary.

Cisco recommends that you have the following items on hand for installation:

- A forklift or pallet jack to move the packaged bay assembly to the unpacking/staging area
- A pair of scissors to cut the plastic banding on the shipping container
- Utility blankets or their equivalent to protect the bay assembly while on the forklift or pallet jack
- Phillips screw driver or cordless drill with Phillips bit
- 3/4-inch (1.91-cm) socket or box-end wrench for the earthquake floor bolts
- Four optional kits listed in Optional Kits, page 41 that can be ordered separately

- Use this guide in conjunction with Cisco ONS 15454 documentation (procedure guide, troubleshooting guide, and reference manual), and the latest release of the *Cisco ONS 15454-FAP-LVD Operations Guide*.

Unpacking Instructions

The ONS 15454 four-shelf and zero-shelf bay assembly ships in a corrugated container that covers the rack on its shipping pallet. After removing the corrugated container, you must remove the bolts that hold the rack to the pallet before moving the unit to the desired location. Figure 5 on page 11 shows the four-shelf bay assembly on a shipping pallet.

Caution Cisco recommends that a minimum of three people move the bay assembly.

Step 1 Use a forklift or pallet jack to place the shipping container as close to the installation location as possible.

Step 2 Cut the plastic banding off of the cardboard shipping container.

Step 3 Remove the cap from the corrugated container.

Step 4 Pull the side panels away from the shipping pallet and set it aside.

Step 5 Remove the base plate from the bottom front of the rack:

a. Remove the two screws that fasten the base plate to the rack.

b. Pull the base plate away.

Step 6 Remove the four bolts that hold the rack to the pallet (rack base bolts).

Step 7 Remove the vertical extenders if necessary.

Figure 5 Four-Shelf Bay Assembly on a Shipping Pallet

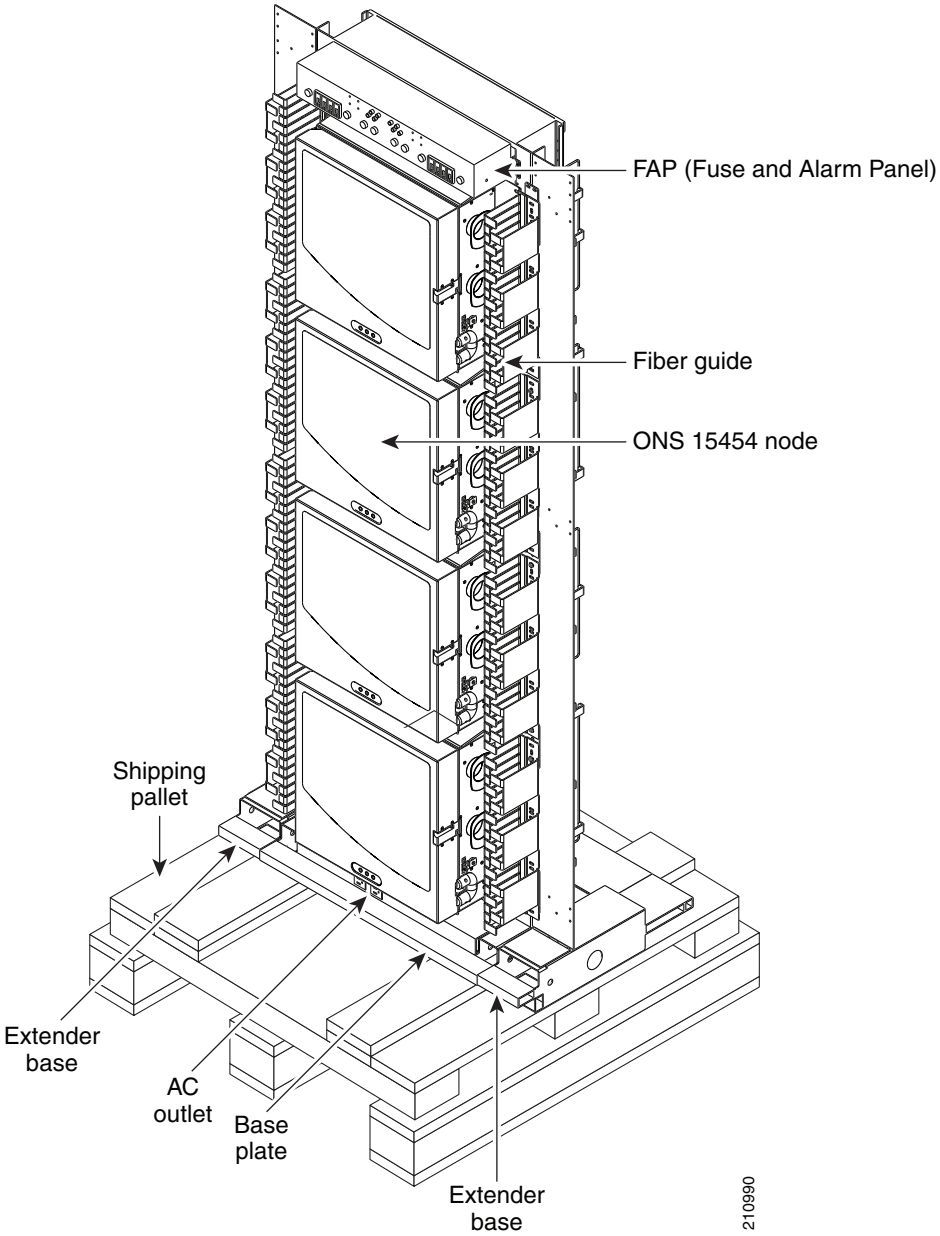

Warning **Stability hazard. The rack stabilizing mechanism must be in place, or the rack must be bolted to the floor before you slide the unit out for servicing. Failure to stabilize the rack can cause the rack to tip over.**

Installation Instructions

Prior to installing the bay assembly, you should prepare your slab or raised floor plan.

Prepare the Slab Floor

Mark and drill your slab floor according to your slab floor plan.

Level Equipment

Temporarily position and level the equipment using metal shims and the equipment frame.

Drill Slab Floor

Step 1 Mark the slab floor for the anchoring holes using either the provided template or by positioning the rack in the desired location. Figure 6 on page 13 shows a rack cross-section with cabling routes. Figure 7 on page 13 shows fiber routing for a slab base. After the floor marks have been made, move the template or rack aside.

Step 2 Drill the anchoring holes into the slab using a masonry drill bit. Make sure the masonry dust is removed from the holes.

Step 3 Reposition the rack over the holes. Depending on the type of slab floor mounting hardware used, the anchors might need to be inserted into the holes before the rack is repositioned.

Step 4 Relevel the rack using metal shims if necessary.

Step 5 Install the bay assembly according to local site practice.

Figure 6 ***Cross-Section of Rack Showing Cabling Routes (Slab for Local)***

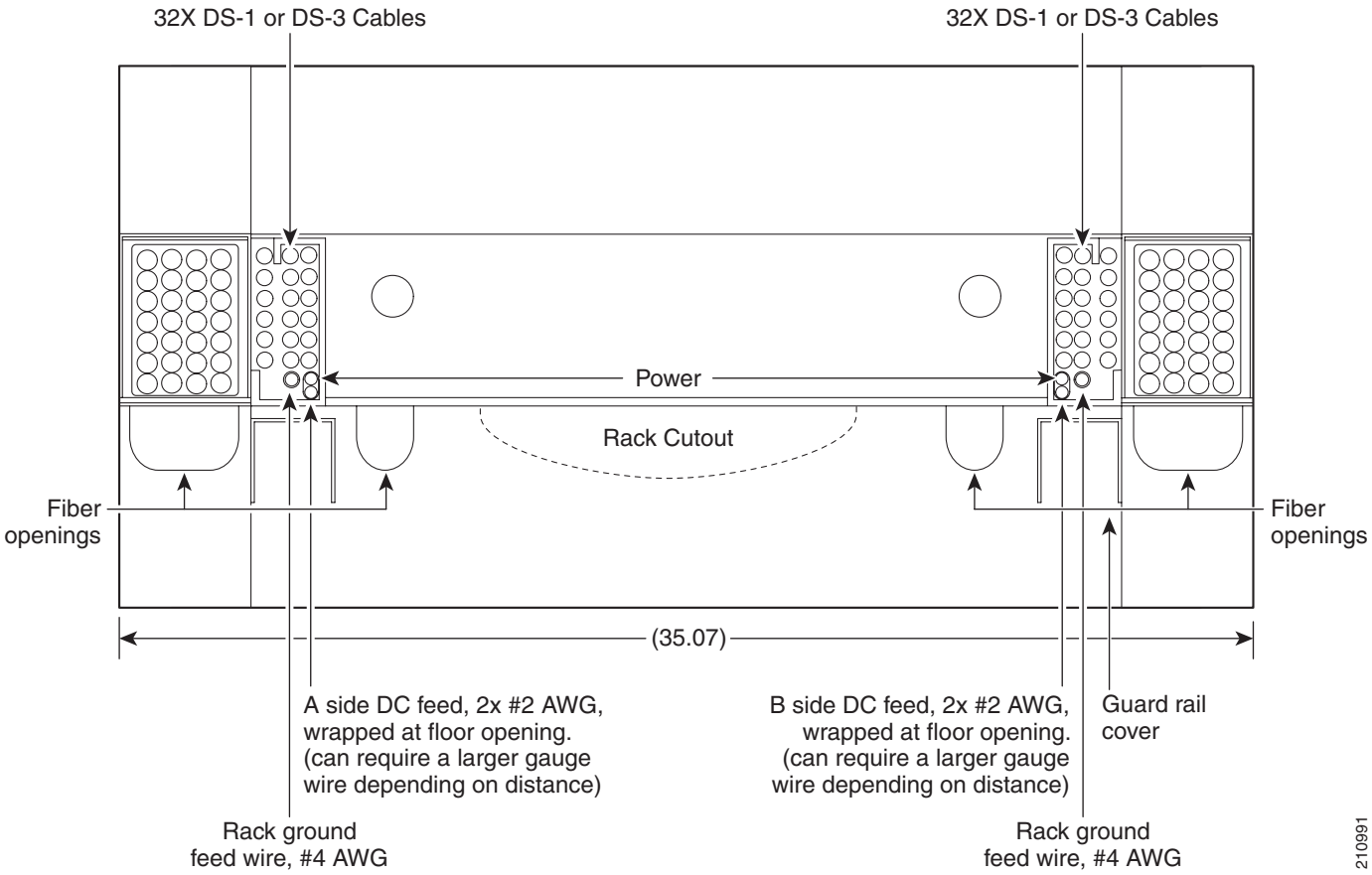

Figure 7 ***Slab Base Fiber Routing***

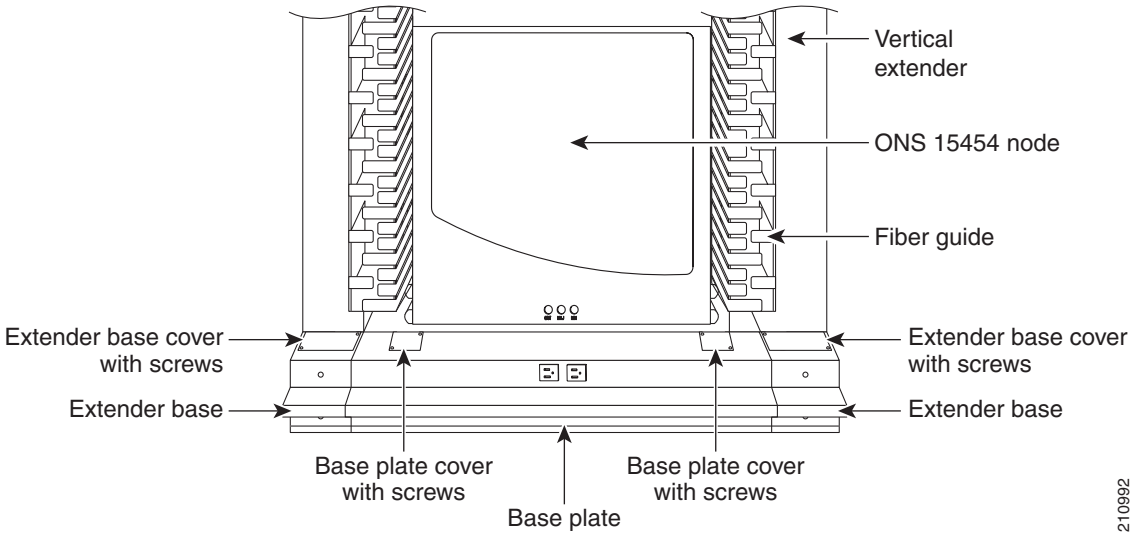

Prepare the Raised Floor

If using a raised floor, mark and drill the floor according to your raised floor plan.

Level Equipment

The raised floor is laser-leveled at the time of the floor installation, so no leveling blocks or shims should be necessary to level the frames. This is especially important in seismic zones 2B and higher, because leveling blocks will cause a rocking motion of the frames during an earthquake.

Cut and Drill Removable Floor Tile

Step 1 Mark the removable floor tile for the cable access to the rack using one of the following methods:

- The floor cutout template (700-24792-XX) included in the accessory kit that ships with the zero-shelf bay assembly
- The diagram in Figure 8 on page 15. The unit of measure for the dimensions in the figure is inches.
- A floor plan drawing
- Place the frame in the proper footprint and mark the tile from the base of the frame or cabinet

Step 2 Mark the tile for the frame anchoring holes.

Step 3 Remove the tile.

Step 4 Cut cable access holes.

Step 5 Drill the anchoring holes through the tile in an area away from the equipment to ensure the equipment area is not contaminated with metal shavings or debris. Continue with the procedures in the "Framework Anchoring" section on page 15.

Note If the floor plan identifies a future frame on the same tile as the one you are adding a frame to, you must drill and cut the tile for the future frame at this time because you cannot remove the tile later.

Note It will be necessary to use alternate anchoring holes in the event the primary holes are obstructed by the stringers that support the removable tile.

Note The unit of measure for the dimensions shown in Figure 8 is inches.

Figure 8 Raised Floor Cutout for CORE and Local

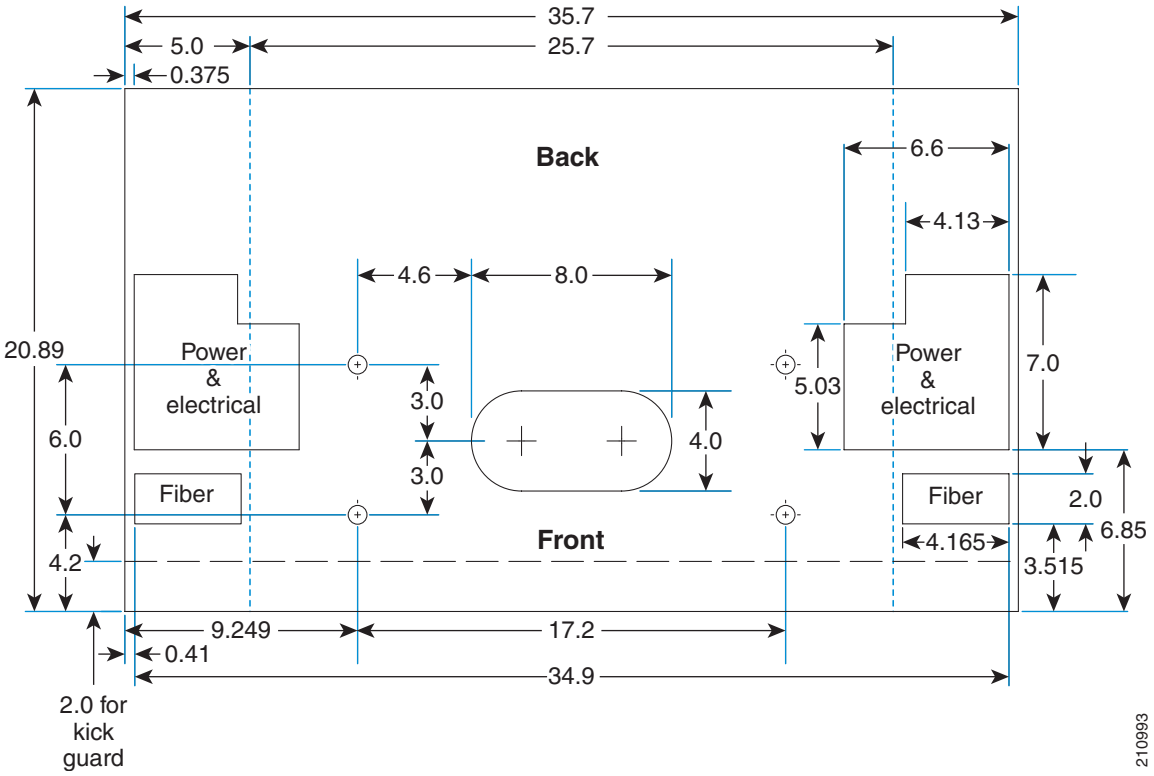

Framework Anchoring

To anchor framework to a raised floor, you must know the earthquake zone where the equipment is being installed. Zones 0 to 2A have the frames bolted to the raised floor through a U-channel across the bottom of the floor tile and stringers. Zones 2B to 4 have 1/2-inch threaded rods extending through the raised floor and connected to seismic anchors with coupling nuts. In all zones, standard hold-down parts are used on top of the floor with threaded rods of varying lengths. Anchors and hold-down material must be engineered for proper seismic zone.

Seismic Zones 0 to 2A

To fasten network and unequal flange duct framework to a raised floor:

Step 1 Place a 1-5/8 x 1-5/8-inch (4.13 x 4.13-cm) U-channel (with continuous slot down) under the stringers and use clips to cover the free ends of the U-channel where the threaded rod goes through to prevent it from spreading when compressed.

In the base of the frame, use the hold-down plate engineered for that frame, threaded rod, nut, washer, insulating bushing, and hold-down washer.

On the bottom of the U-channel, use the clip, washer, lockwasher, and nut.

Note The U-channel should not extend more than four inches (10.16-cm) past the edge of the stringers or it will block access under the floor.

Warning **End caps must be used on the U-channel to prevent injury.**

Step 2 Torque the nut to 30 ft-lb (40.675 n-m).

Note Do not over-tighten the nut; the tile will become deformed and will be uneven with surrounding tiles.

Seismic Zones 2B to 4

In seismic zones 2B and higher, threaded rods are run down to seismic anchors with coupling nuts from the concrete floor. U-channels are not used in higher earthquake zones. Anchor the rack at all four corners in higher earthquake zones.

Note Do not over tighten threaded rods; the floor tile will become deformed and will be uneven with surrounding tiles.

Install the ONS 15454 Four-Shelf or Zero-Shelf Bay Assembly

The emphasis in the following installation instructions is to position the bay assembly in your facility after it has been removed from its shipping pallet. Perform actual installation and individual node provisioning according to local site practice.

Step 1 Use a utility blanket or its equivalent to protect the bay assembly while on the forklift or pallet jack.

Step 2 Position the forklift or pallet jack so that it faces the front (door side) of the bay assembly.

Step 3 With one person on each side of the bay assembly, position the forklift or pallet jack under the rack.

Step 4 If a safety strap is used to secure the bay assembly, fit the safety strap snugly around the bay assembly. Do not cinch the strap too tightly. Cinching the strap too tightly can result in component damage.

Step 5 Move the bay assembly to the installation site and unload it. To avoid injury, make sure that a sufficient number of people are present.

Step 6 Install the bay assembly according to local site practice.

Step 7 After the rack is installed, attach the extender bases and vertical extenders to both sides of the rack as needed.

Install the Tie-Down Bar

Tie-down bars can be installed to secure cabling on the rear of the bay assembly rack. The tie-down bar can be used to provide a diverse path for redundant power feeds and cables. Up to eight tie-down bars can be installed in the four-shelf bay assembly rack, one on each side of each bay (Figure 9).

Step 1 To attach a single tie-down bar, align the ends of the tie-down bar with two screw holes located in the vertical rack frame. The L-shaped bends with screw holes at the ends of the tie-down bar should point outward away from the bays.

Step 2 Attach the tie-down bar to the rack with two screws.

Figure 9 Installing the Tie-Down Bar

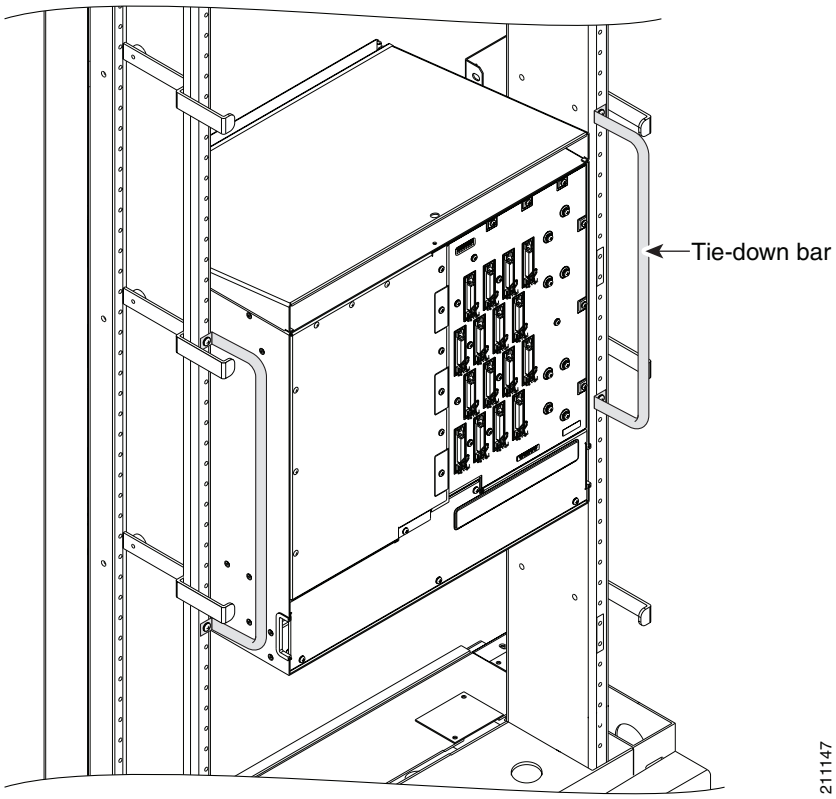

Tie-Down Bar and Fiber Bracket Locations

Figure 10 shows the proper location of the tie-down bars and fiber brackets on the rear of the bay assembly rack. Measuring the height in inches from the floor, the locations of the top screw hole on each tie-down bar are shown on the left side of the figure. The attachment points for the fiber brackets are shown on the right side of the figure.

Figure 10 Location of Tie-Down Bars and Fiber Brackets (Rear View of Rack)

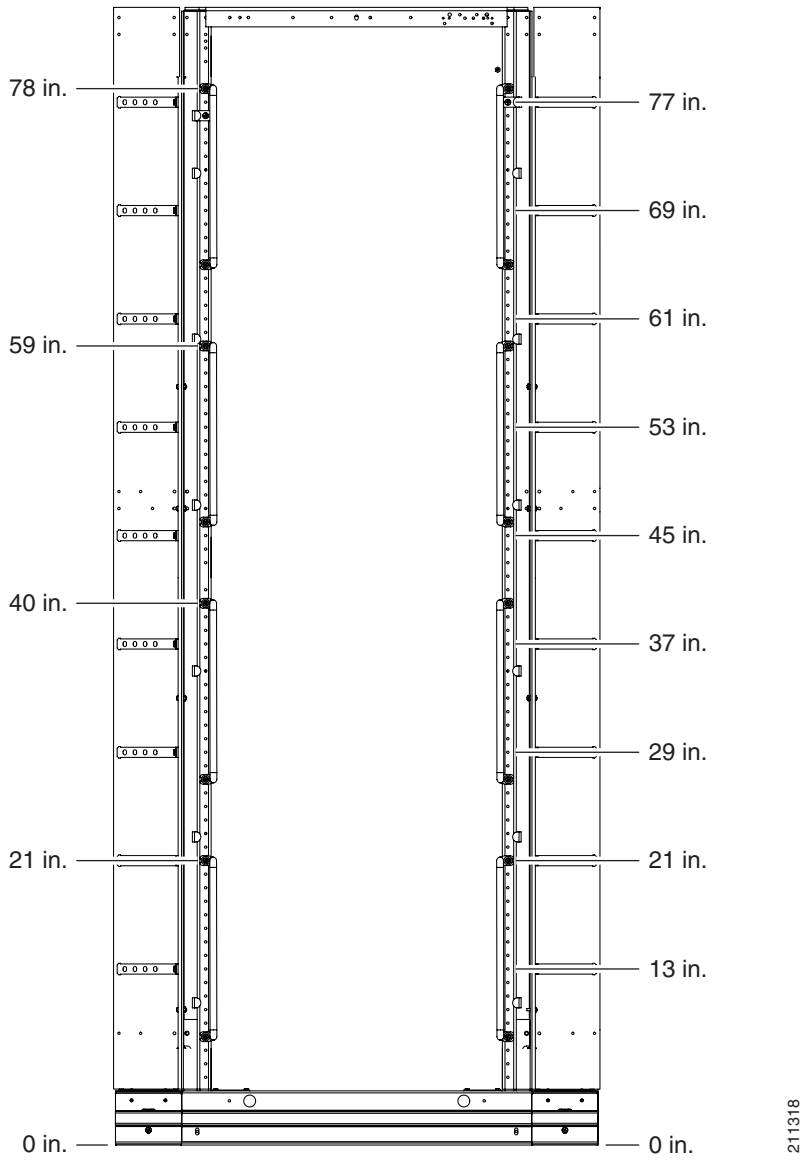

Attach the ESD Bracket

To provide electrostatic discharge (ESD) protection when handling cards, one ESD bracket can be attached to the side of each bay (Figure 11). You can attach one per bay (up to four maximum) for ease of access.

Step 1 Align the ESD bracket on the side of a bay as shown in Figure 11.

Step 2 Attach the ESD bracket to the bay with one Phillips 6-32 x 0.62 (1.567-cm) pan-head screw.

Step 3 Apply the provided ESD label in the location shown in the figure.

Figure 11 Attaching the ESD Bracket

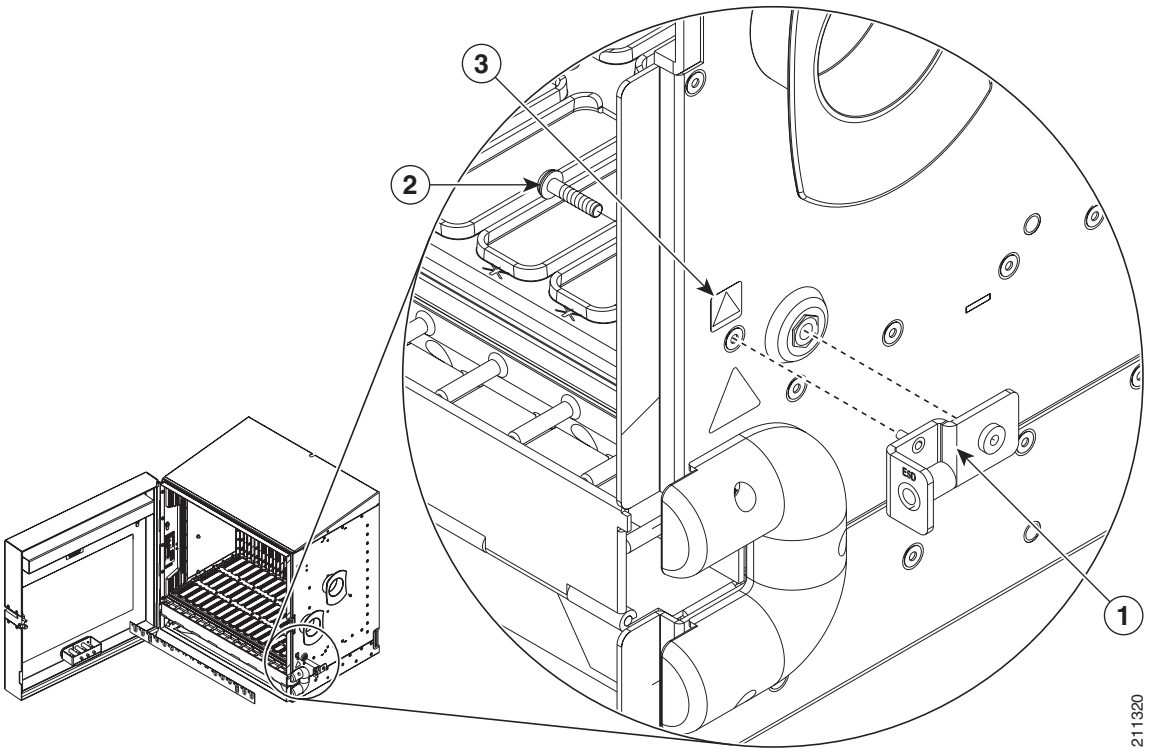

Cabling Illustrations

Figure 12 through Figure 26 illustrate cabling schemes for a bay assembly.

Route Fiber from the Top

Fiber and power cables to each node are typically routed from the top of the rack, as shown in Figure 12 and Figure 13.

Figure 12 Routing Cables from the Top on a Four-Node Rack (Rear View)

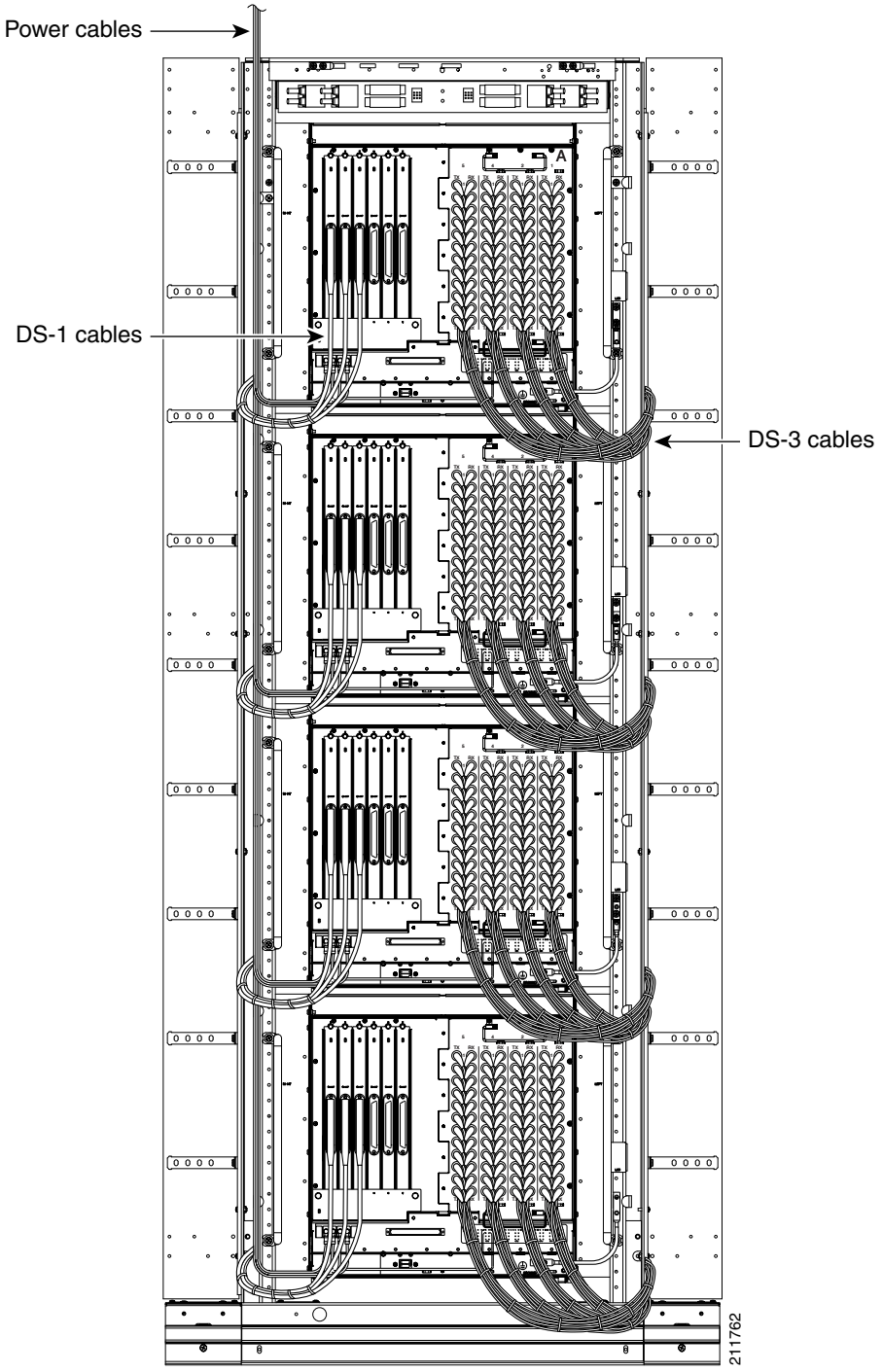

Rear view of rack

Figure 13 Routing Cables from the Top on a Four-Node Rack (Side View)

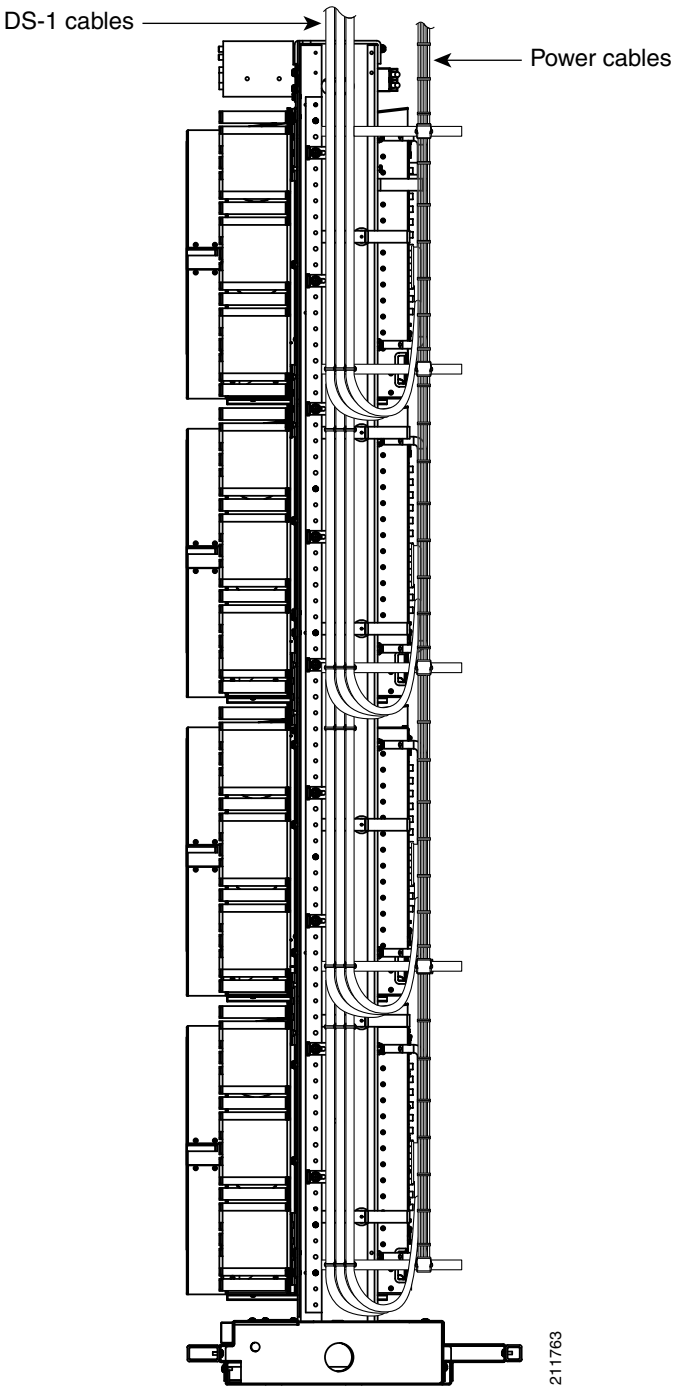

Right side view of rack

Route Fiber Through the Base

Cutouts in the extender base units at the bottom of the rack provide the option of routing cables from the raised floor tile through the bottom of the rack.

Step 1 After installing the rack onto the raised floor, slide the base plate out from the rack (if not already removed) (Figure 14).

Figure 14 Sliding the Base Plate Out from the Rack

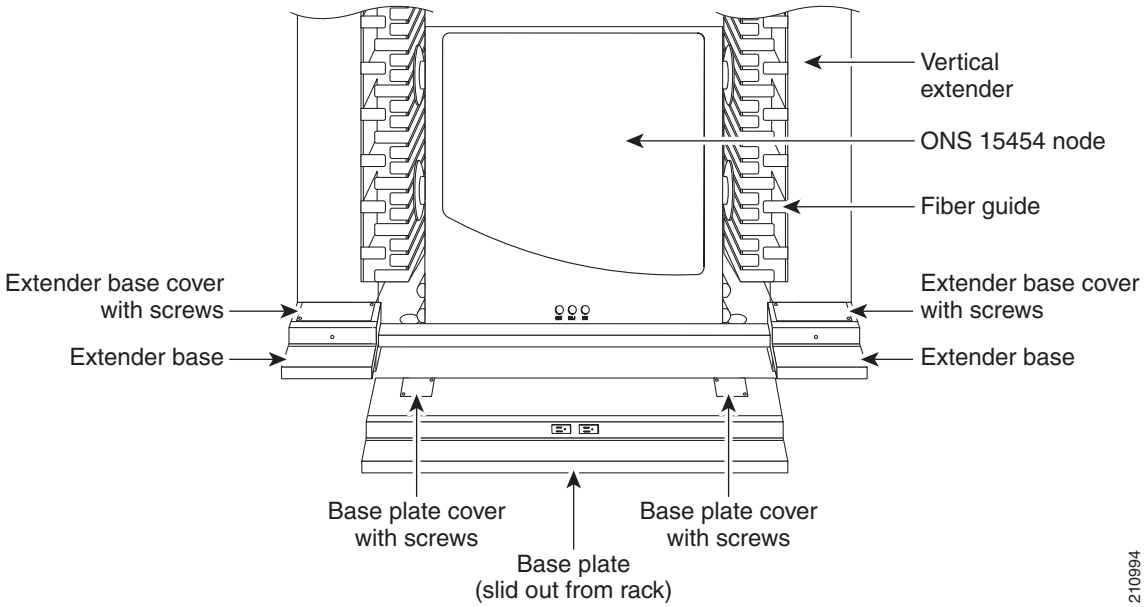

Step 2 To route fiber, unscrew and remove the covers on the base plate and extender bases (Figure 15).

Figure 15 Base Plate and Extender Bases with Covers Removed

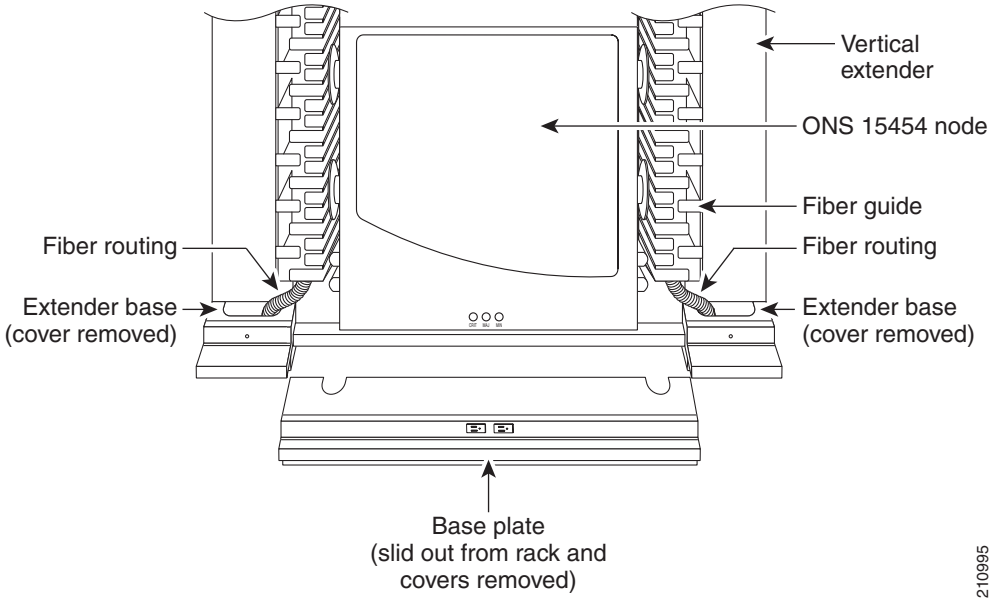

When the covers have been removed, you have access to the base of the rack and any holes previously cut into the raised floor tile, as shown in Figure 16.

Figure 16 Raised Floor Base Fiber Routing Close-up

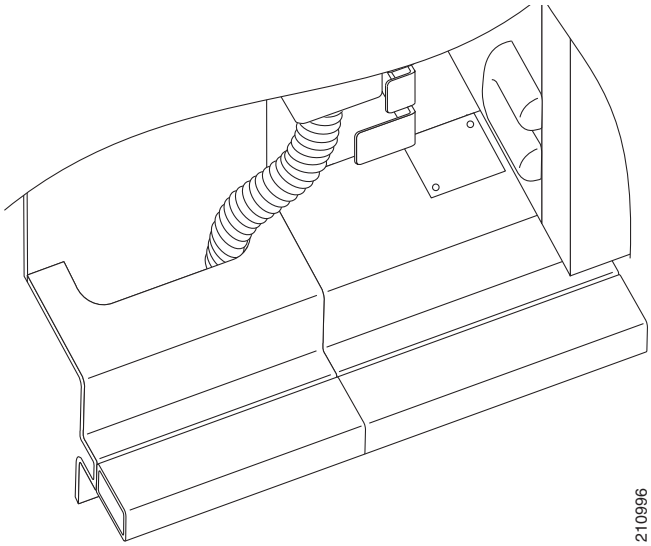

You can use the base plate or extender base holes to route the fibers. Cisco recommends using the base plate holes for the bottom node and the extender base holes for the other three nodes on the four-node rack. All electrical cables will be routed in the back of the rack in the extender bases. Holes should already be cut out in the raised floor tile to compensate for any DS-1, DS-3, ground, and power cables.

Step 3 When all fiber cables have been placed in the front portion of the rack, replace the base plate by sliding it toward the back of the rack. Figure 17 shows the routed fiber with the base plate replaced.

Figure 17 Raised Floor Base Fiber Routing

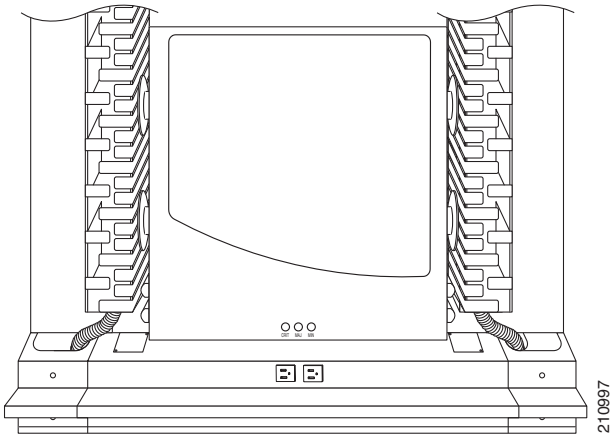

Figure 18 Fiber Guide on a Four-Node Rack

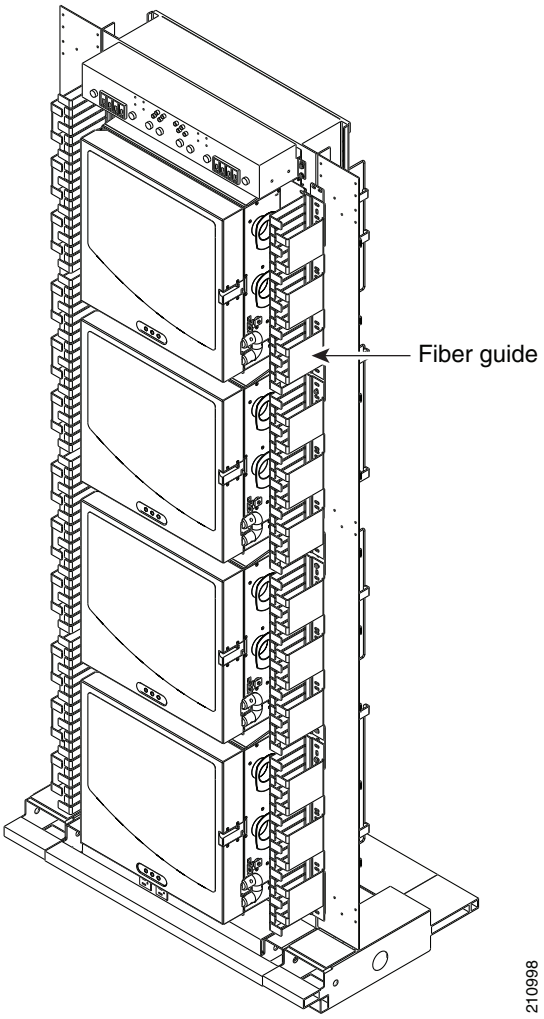

Figure 19 Rear View of a Four-Node Rack

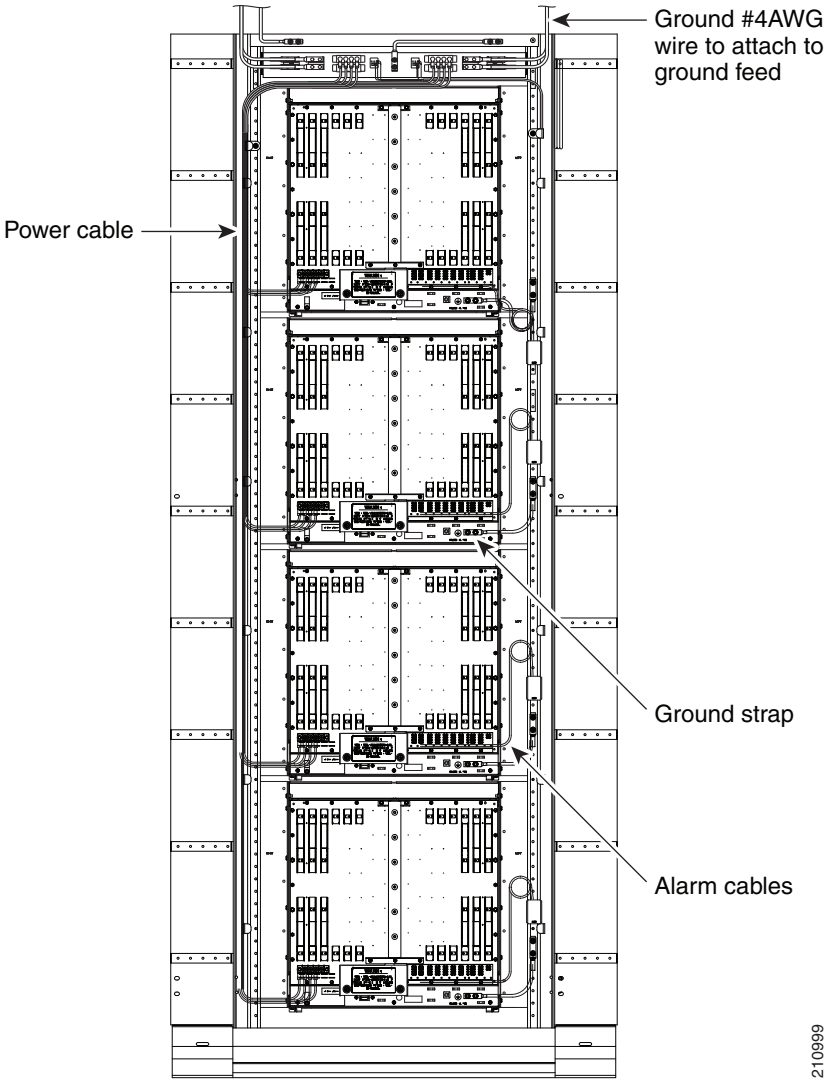

Figure 20 Side View of DS-1 and Power Cables

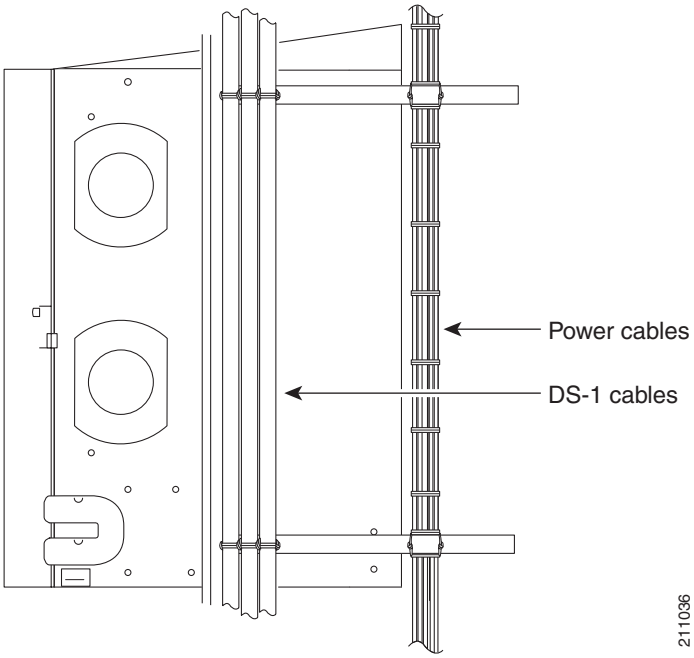

Figure 21 Close-Up of Power Cable Lacing

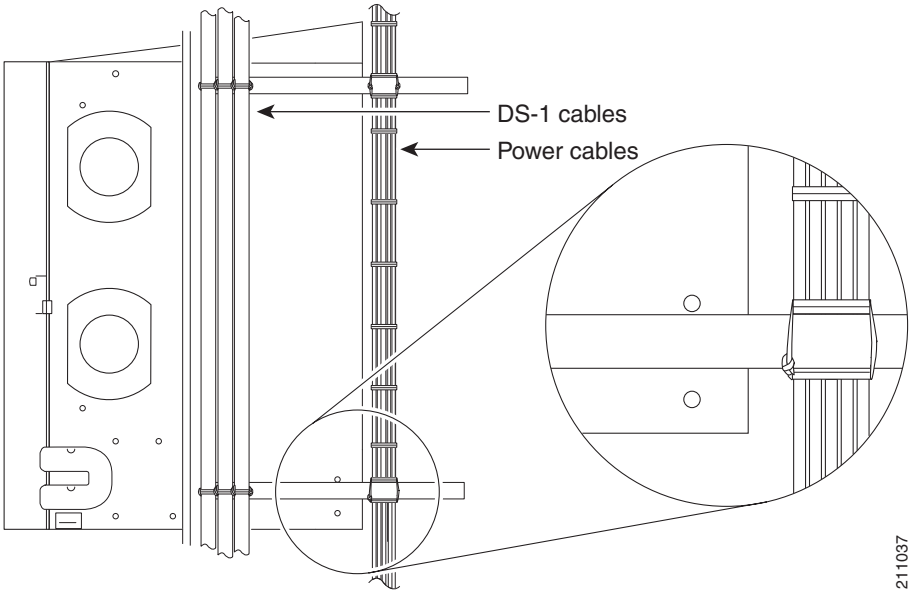

Figure 22 Side Rack View of DS-1 and Power Cables

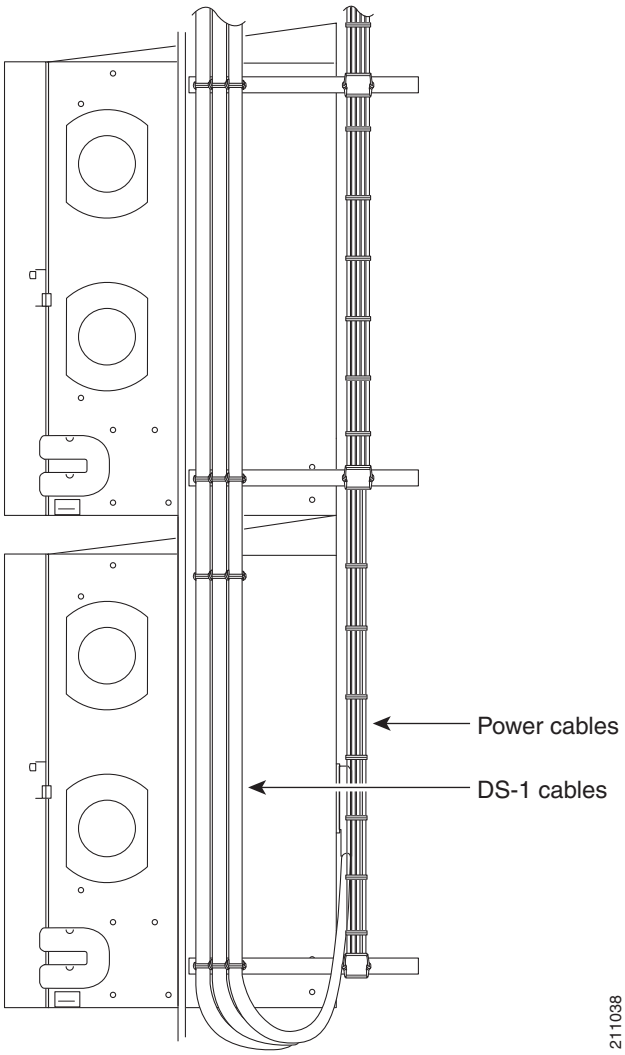

Figure 23 Cabling on One Node

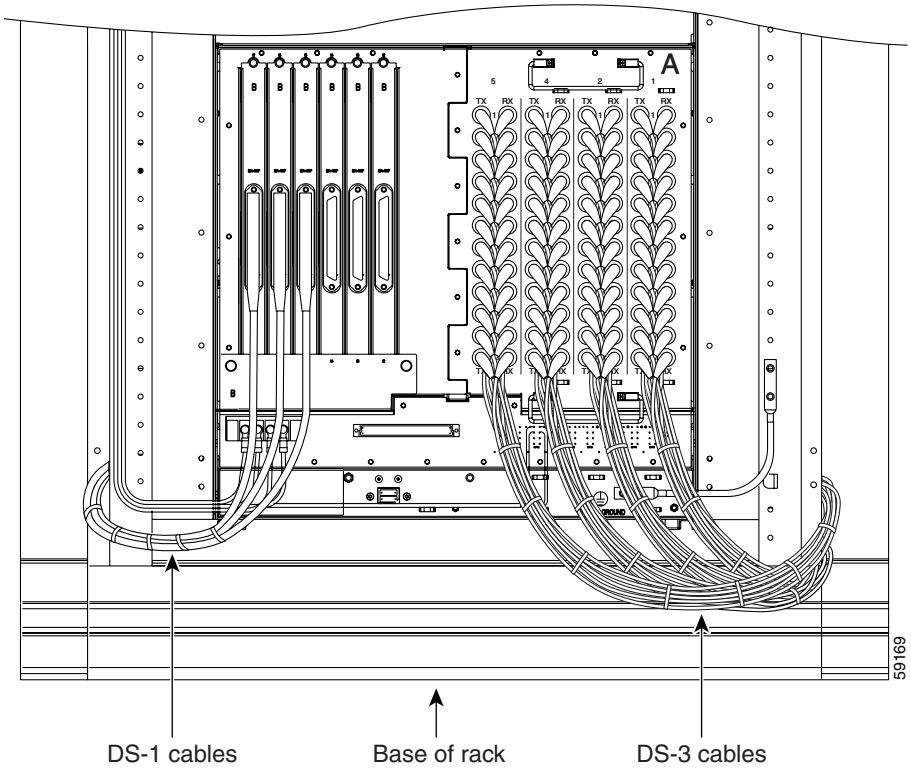

Figure 24 Standoff with Wiring

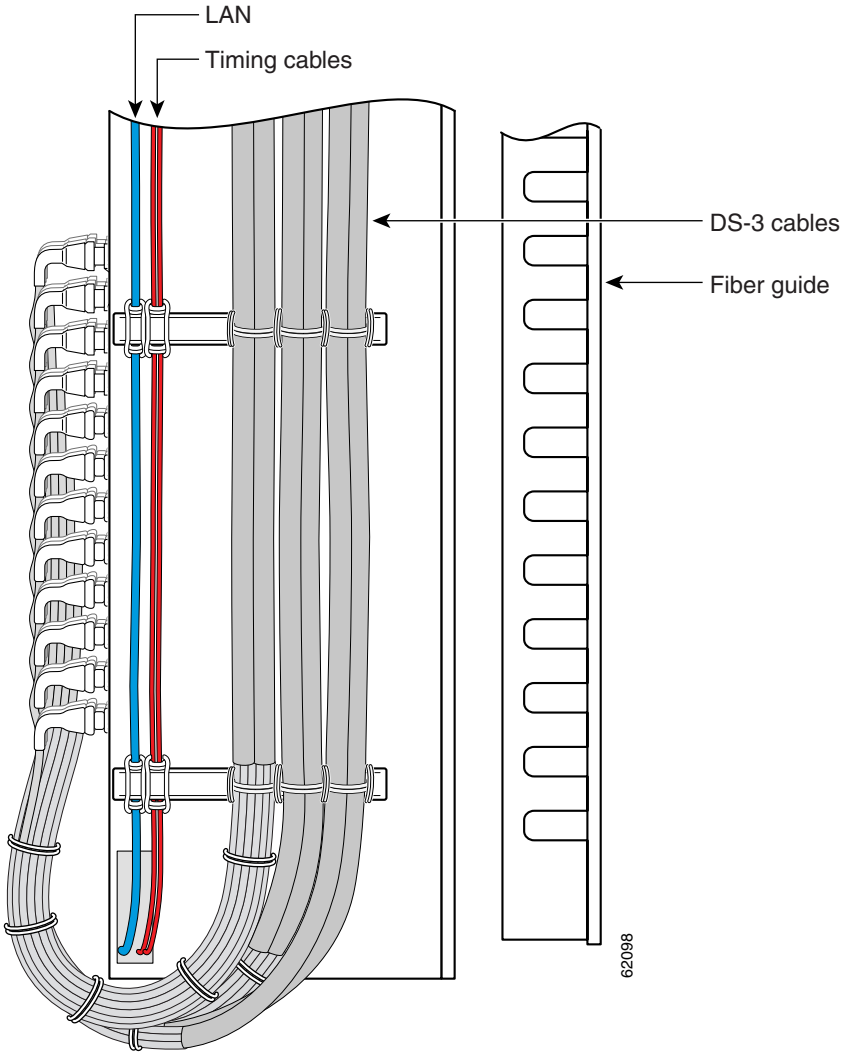

Figure 25 Standoff at Bottom of Rack

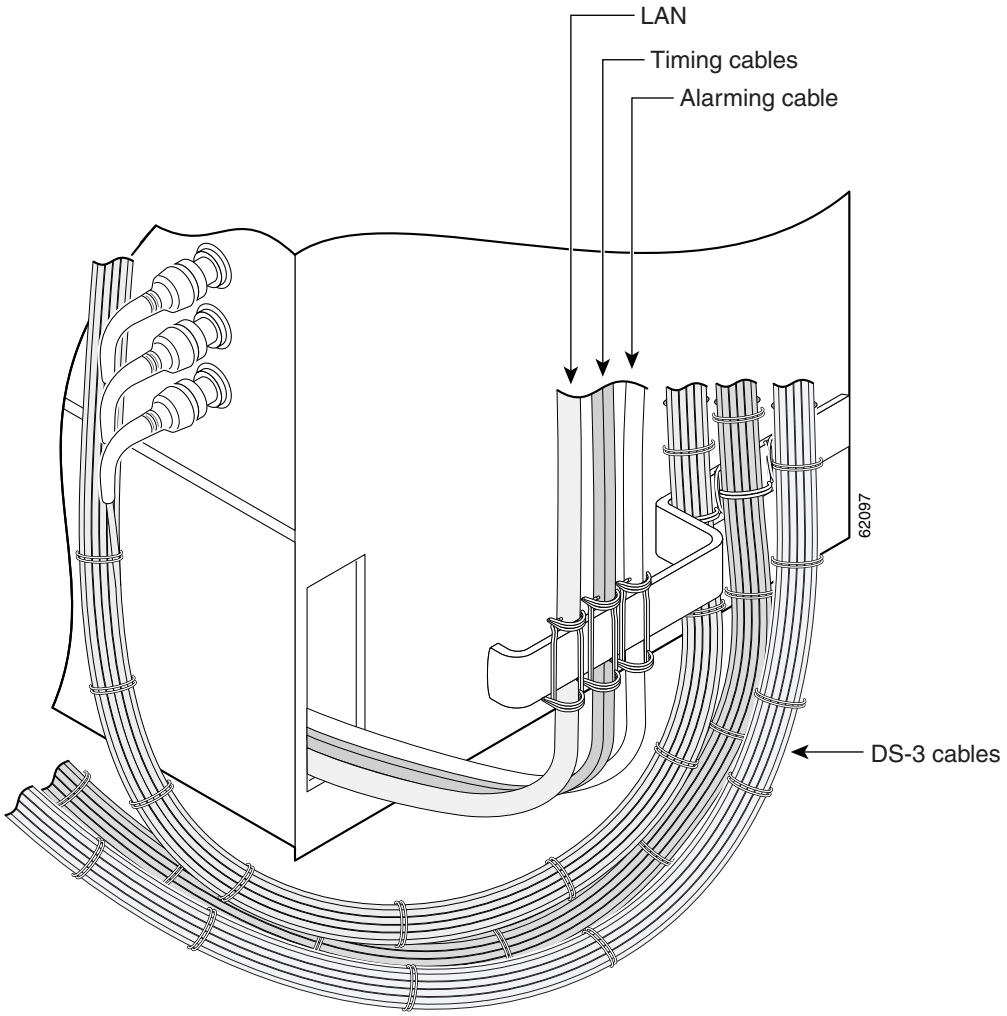

Figure 26 48 Fibers from One Node

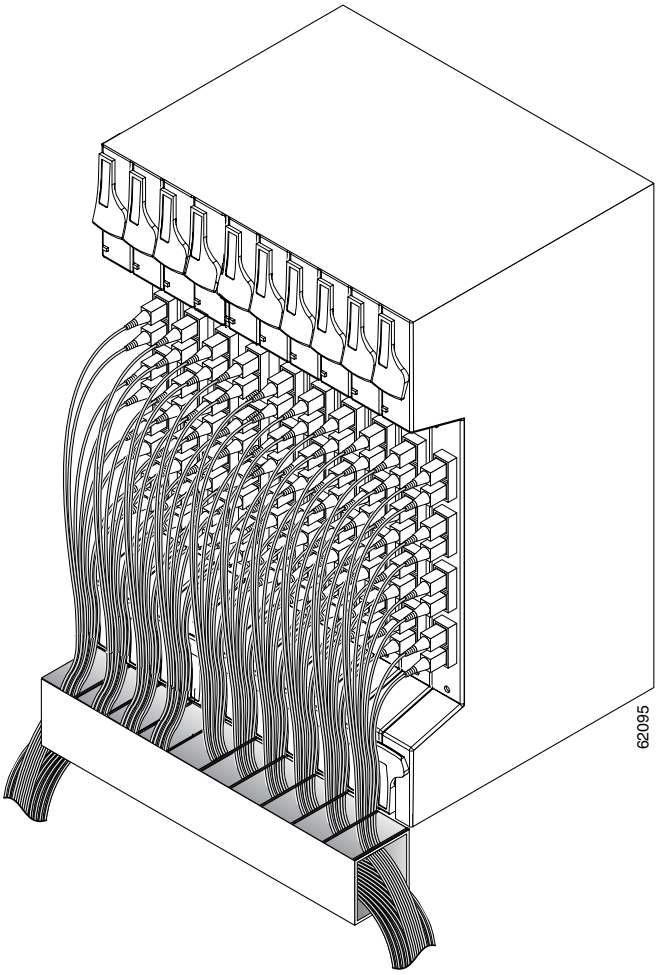

Fuse and Alarm Panel Wiring

The Fuse and Alarm Panel (FAP) included in the four-shelf and zero-shelf bay assemblies provides four sets of two 30-A fused drops, for powering the redundant A and B inputs of four ONS 15454 nodes. The FAP has integrated low voltage disconnect (LVD) circuitry to provide a shutdown of the output power due to a drop in input voltage from the network power source.

Necessary overload protection is provided with eight user pluggable TPA fuses, separated into two sets of four fuses, to allow for diverse routing of two power sources to each shelf assembly. Also provided is an LED alarm display for visual fault identification, with the capability for external alarm closures for remote fault signaling.

The FAP has the capability to report six alarms to a network operations center (NOC). Equipped with an alarm interface card, the ONS 15454 has the capability to report up to 32 environmental alarms, depending on which alarm interface card is installed. Only one shelf (with an AIC/AIC-I card) is needed to monitor alarming for a loss of power and a blown fuse condition. The alarms are reported to the NOC

through the connected LAN wire also tied to the same shelf. Figure 27 through Figure 30 show different views of the FAP including front, rear, Side A, Side B, and alarming. Refer to the latest release of the *Cisco ONS 15454-FAP-LVD Operations Guide* for more information on the fuse and alarm panel.

Figure 27 FAP (Front View)

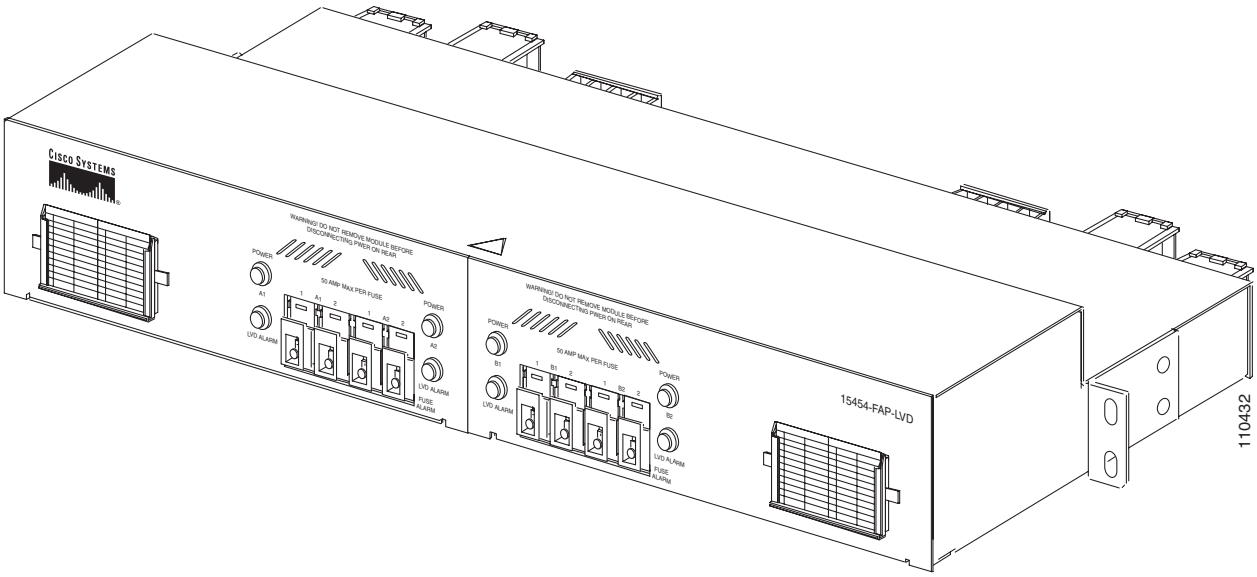

Figure 28 FAP Side A

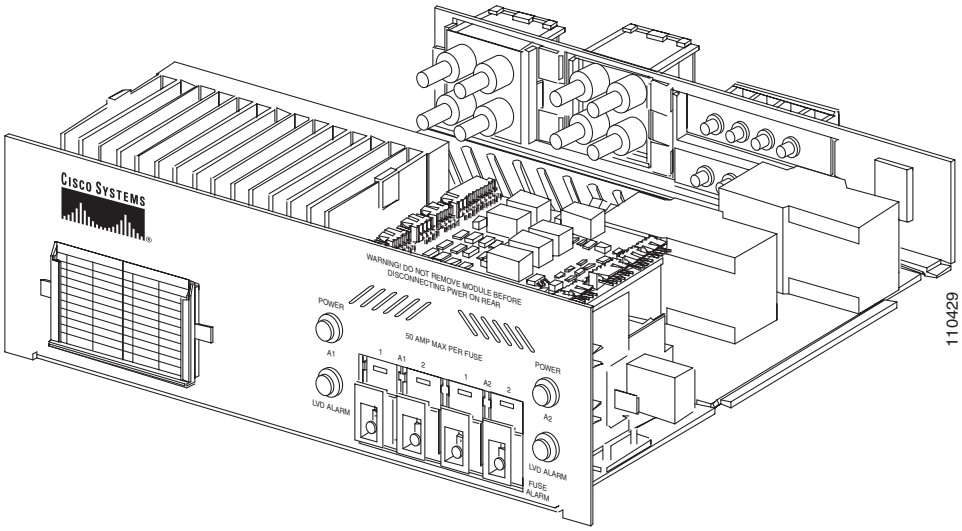

Figure 29 FAP Side B

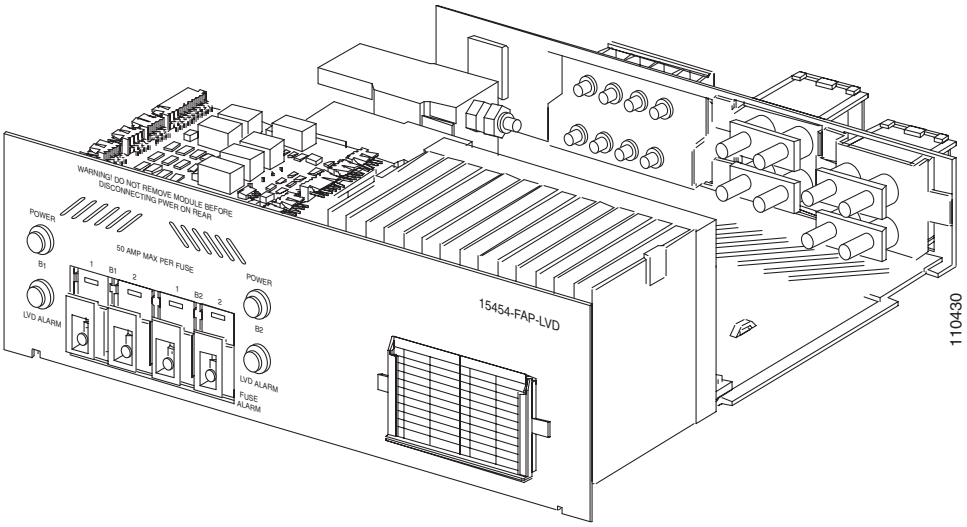

Figure 30 FAP (Rear View)

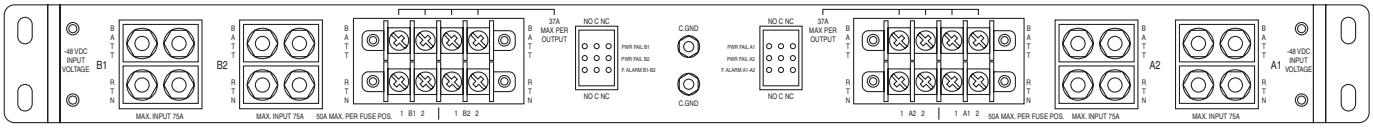

FAP Output and Input Power

Route output and input power according to local site practice. Refer to the latest release of the *Cisco ONS 15454-FAP-LVD Operations Guide* for more information. Figure 31 through Figure 35 show output and input lugs and wiring and Table 1 on page 36 lists lug wiring positions.

Note Be sure to connect the ground cable from the C.GND lugs on the center rear of the FAP to the chassis frame, as shown in Figure 35 on page 38.

Figure 31 Connecting Output Power Using Ring-Type Compression Lugs

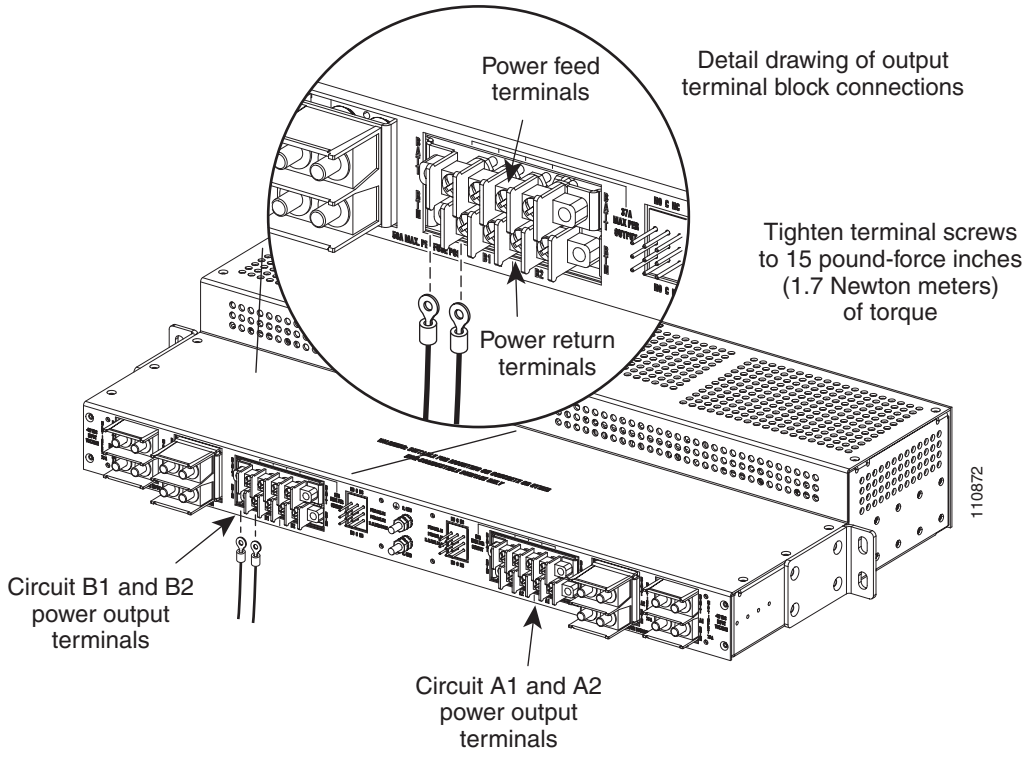

Figure 32 Close-Up of Lugs on Rear of FAP

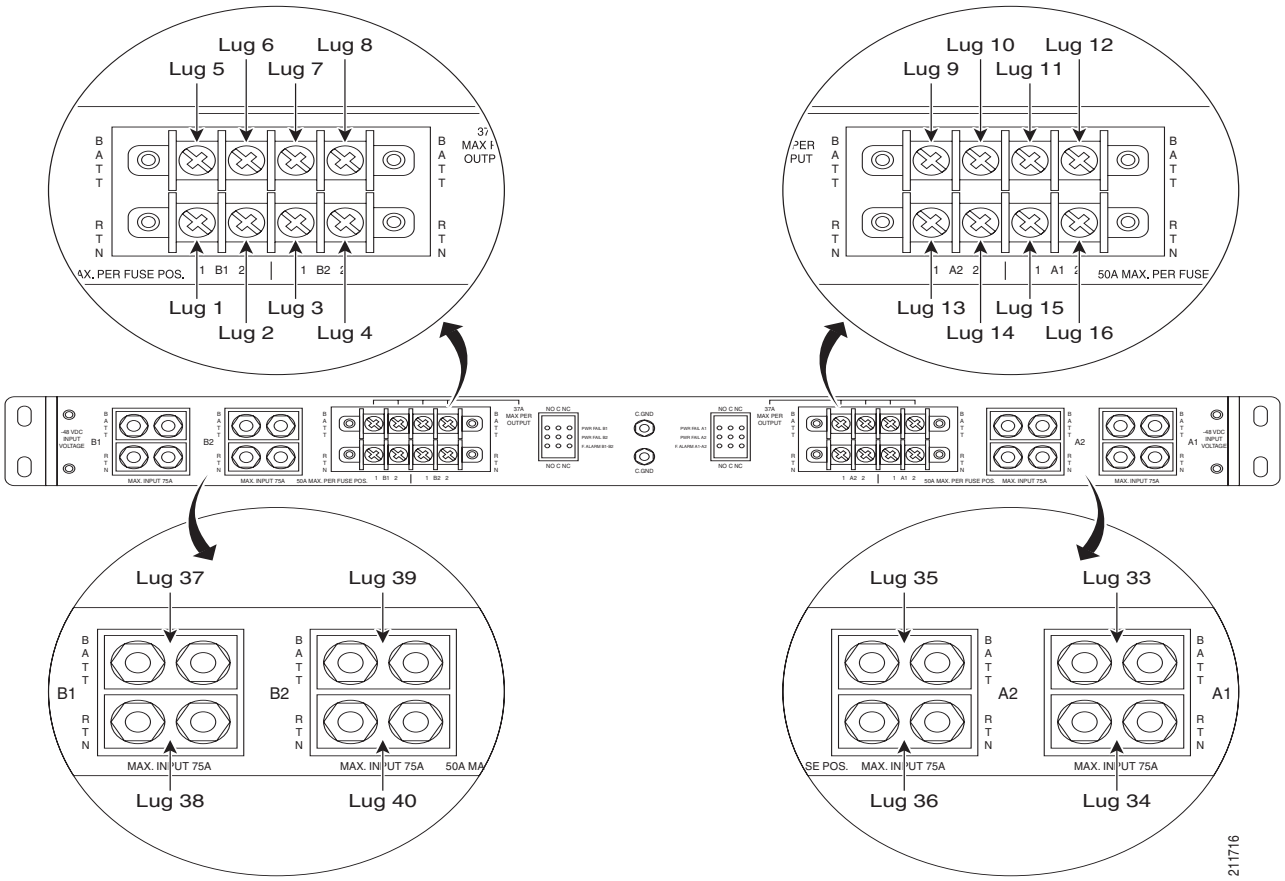

Table 1 Lug Wiring Positions

Lug (From) (See Figure 32 on page 35)		Wire		Lug (To) (See Figure 33 on page 37)	
Lug	**Label**	**Color**	**Wire P/N**	**Label**	**Lug**
1	FAP, B Side, RTN, B1-1	Black	31-0768-01	Shelf, 1, RTN 2	31
2	FAP, B Side, RTN, B1-2			Shelf, 2, RTN 2	27
3	FAP, B Side, RTN, B2-1			Shelf, 3, RTN 2	23
4	FAP, B Side, RTN, B2-2			Shelf, 4, RTN 2	19
5	FAP, B Side, –48 V, B1-1	Red	31-0767-01	Shelf, 1, BAT 2	32
6	FAP, B Side, –48 V, B1-2			Shelf, 2, BAT 2	28
7	FAP, B Side, –48 V, B2-1			Shelf, 3, BAT 2	24
8	FAP, B Side, –48 V, B2-2			Shelf, 4, BAT 2	20
9	FAP, A Side, –48 V, A2-1			Shelf, 1, BAT 1	30
10	FAP, A Side, –48 V, A2-2			Shelf, 2, BAT 1	26
11	FAP, A Side, –48 V, A1-1			Shelf, 3, BAT 1	22
12	FAP, A Side, –48 V, A1-2			Shelf, 4, BAT 1	18
13	FAP, A Side, RTN, A2-1	Black	31-0768-01	Shelf, 1, RTN 1	29
14	FAP, A Side, RTN, A2-2			Shelf, 2, RTN 1	25
15	FAP, A Side, RTN, A1-1			Shelf, 3, RTN 1	21
16	FAP, A Side, RTN, A1-2			Shelf, 4, RTN 1	17
Lug (From) (See Figure 32 on page 35)		**Wire**		**Lug (To)**	
Lug	**Label**	**Color**	**Wire P/N**	**CO Batteries**	
33	FAP A1 BATT	Red	Customer Cable		
34	FAP A1 RTN	Black			
35	FAP A2 BATT	Red			
36	FAP A2 RTN	Black			
37	FAP B1 BATT	Red			
38	FAP B1 RTN	Black			
39	FAP B2 BATT	Red			
40	FAP B2 RTN	Black			

Figure 33 Lug Wiring from Rear of FAP to Shelf Lugs

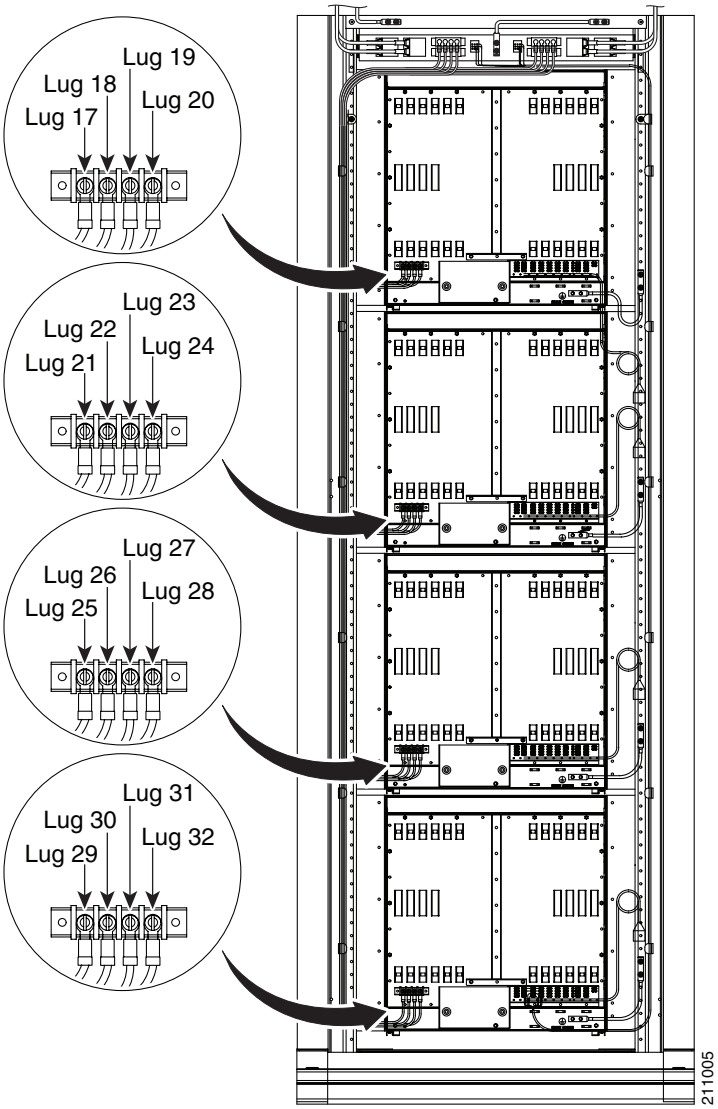

Figure 34 Connecting Input Power

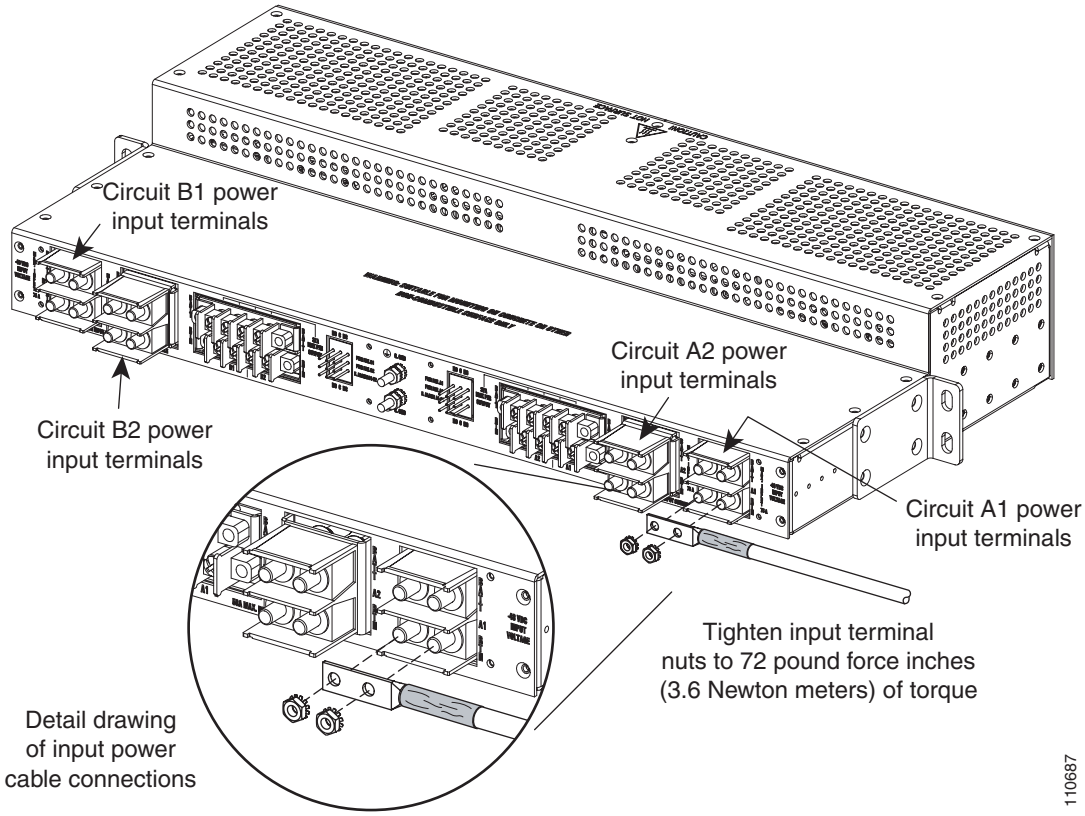

Figure 35 Wiring from Rear of FAP

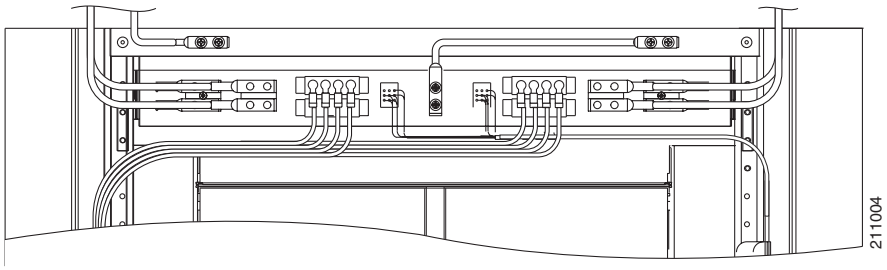

Replace Side A or Side B of the FAP

Note When replacing Side A or Side B of the FAP, all wires must be disconnected from that module.

Step 1 Turn off the power supply to the side you are replacing, either Side A or Side B.

Warning **Each side (Side A or Side B) has two power inputs. You must remove both power inputs from the side you are replacing in order for that side to be powered down.**

Step 2 Disconnect the alarm wires on the module that is being replaced.

Step 3 Disconnect all wires from the input and output terminals on the side that is being replaced.

Step 4 Remove the four screws on the front and the four screws on the back of the side that is being replaced.

Step 5 Slide out the side that is being replaced from the FAP. Figure 36 shows Side B being removed/replaced.

Figure 36 Removing or Replacing FAP Side B

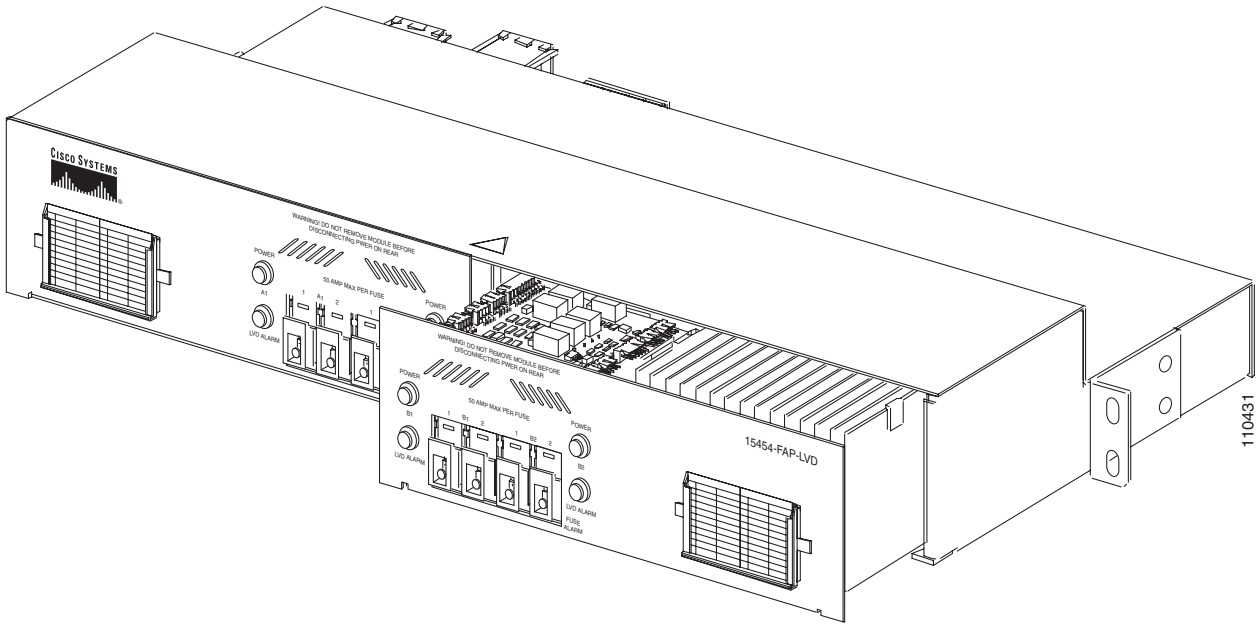

Step 6 Slide in the new Side A or Side B and fasten it using the same eight screws (four front, four back) that were previously removed.

Step 7 Connect all wires from the output and input terminals on the new Side A or Side B.

Step 8 Connect the alarm wires on the new Side A or Side B.

Step 9 Turn on the power to the new Side A or Side B.

Ground and Power

The ground studs and power input and output terminals are mounted on the rear side of the FAP. The plastic protective covers install over the input and output power terminals to prevent accidental contact with the terminals when power is present in the panel.

Warning **Shut off the power from the power source or turn off the breakers before beginning work.**

Warning **This equipment is intended to be grounded. Ensure that the rack is connected to common office earth ground during normal use.**

Warning **Do not mix conductors of dissimilar metals in a terminal or splicing connector where physical contact occurs (such as copper and aluminum, or copper and copper-clad aluminum), unless the device is suited for the purpose and conditions of use.**

Warning **Connect the ONS 15454 only to a DC power source that complies with the safety extra-low voltage (SELV) requirements in IEC 60950-based safety standards.**

Warning **The ONS 15454 relies on the protective devices in the building installation to protect against short circuit, overcurrent, and grounding faults. Ensure that the protective devices are properly rated to protect the system, and that they comply with national and local codes.**

Warning **A readily accessible fuse must be incorporated in the fixed wiring.**

Warning **If you use redundant power leads to power the ONS 15454, disconnecting one lead will not remove power from the node.**

Caution Always use the supplied ESD wristband when working with a powered ONS 15454. Plug the wristband cable into the ESD jack located on the lower-right outside edge of the shelf assembly.

Central Office Ground to Bay Wire Ground

Connect the common central office (CO) ground to the bay wire ground according to local site practice.

Note The bay assembly ground must be attached to the common CO ground via an H TAP compression connector.

Central Office Power to FAP

Connect the CO power to the FAP according to local site practice.

Note CO power from the battery distribution feeder bay (BDFB) to the bay assembly must be a direct feed from a single breaker (one breaker for return, and one breaker for –48 VDC) at the BDFB to the input connection of the bay assembly. The size or gauge of the power wire feed must be calculated by the distance from the BDFB to the FAP.

Optional Kits

There are four optional kits that can be ordered separately as needed for cable protection, aisle guards, and supplementary installation components. This section lists the kits by title and provides descriptions for each kit.

ONS 15454 Bay Extender Kit (5-inch)

The ONS 15454 Bay Extender Kit provides rear cable protection and additional cable management space. It includes a 5-inch (12.7-cm) vertical extender (Figure 37) and extender base (Figure 38 and Figure 39).

Figure 37 Vertical Extender

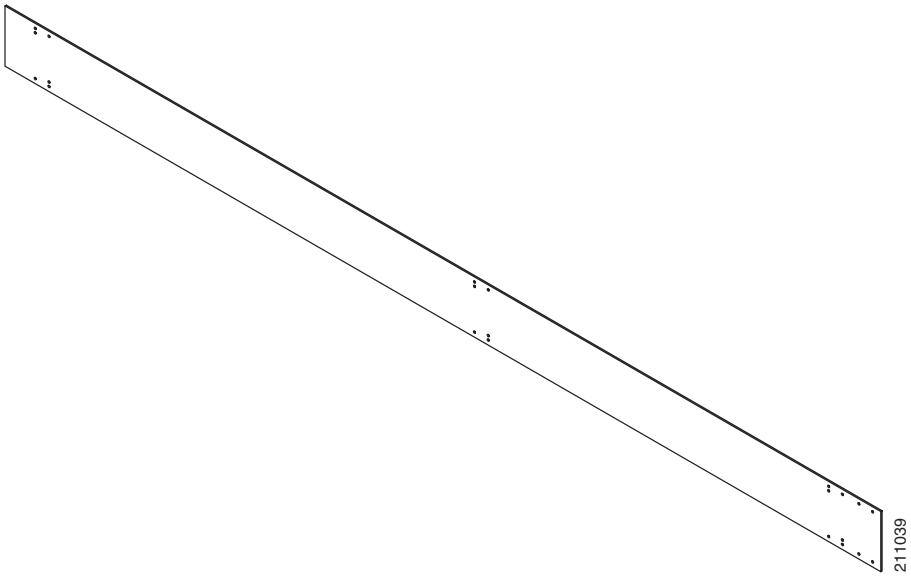

Figure 38 Extender Base

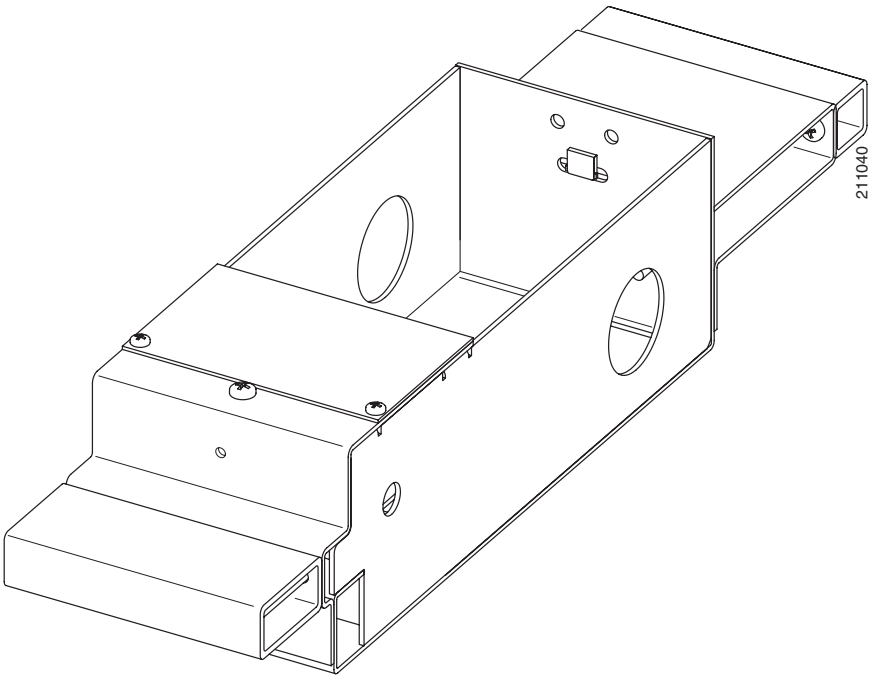

Figure 39 Extender Base Assembly

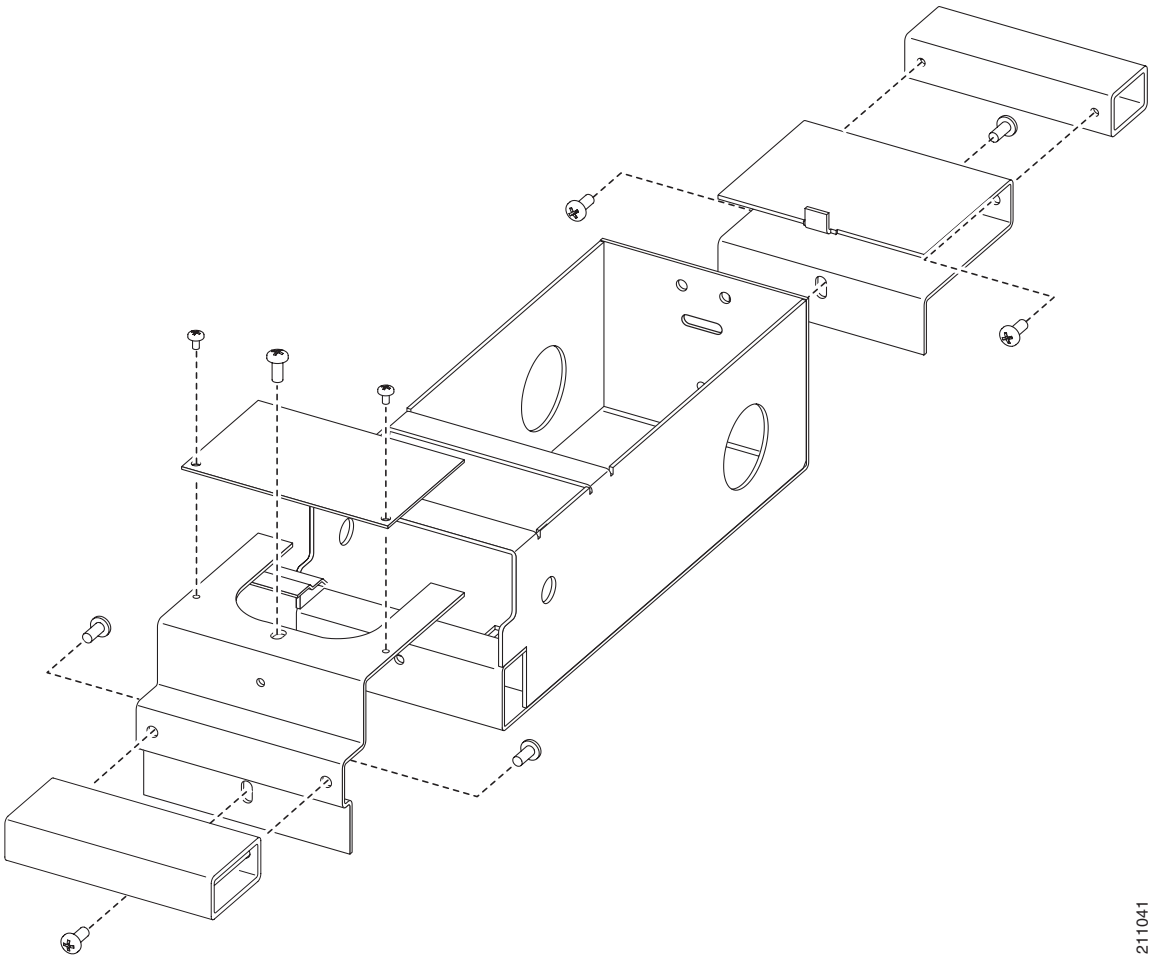

ONS 15454 Bay End Plate Cover Kit

The ONS 15454 Bay End Plate Cover Kit provides a basic end plate for temporary cable protection. It contains parts that mount flush against the rack with no major footprint change (thickness of the metal only) against the edge of the rack to protect the cables. This plate is usually used for an aisle that is not complete, or as an aisle guard for aisles. The end plate cover can be mounted with the vertical extender as shown in Figure 40 or mounted directly as shown in Figure 41.

Figure 40 End Plate Cover Assembly Mounted with Extender

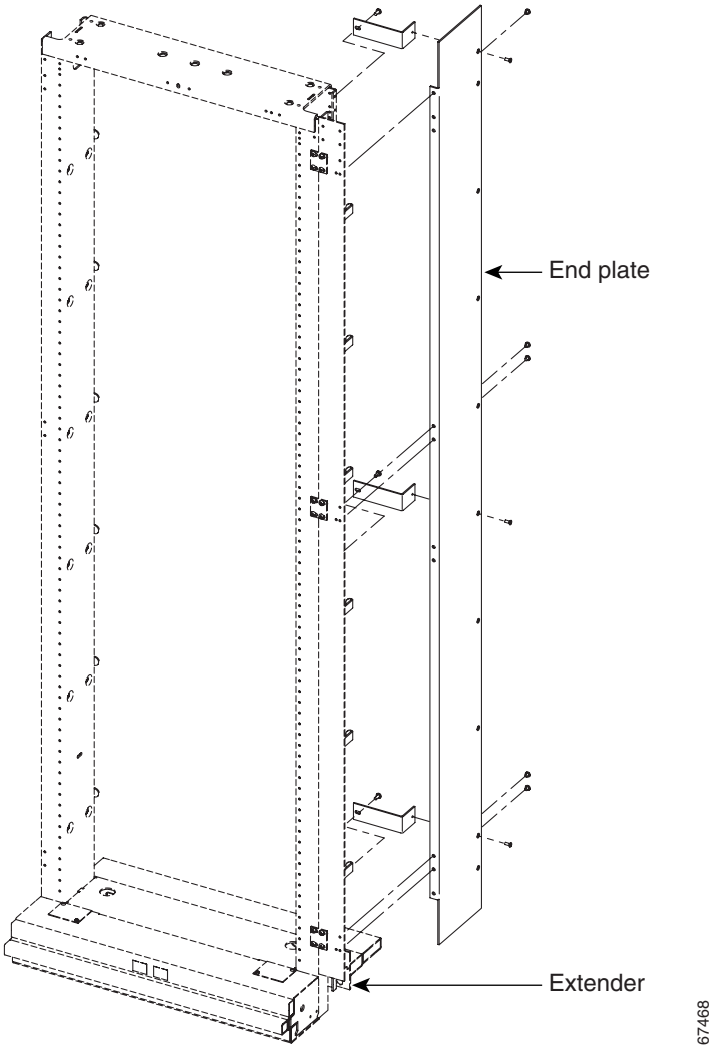

Figure 41 End Plate Cover Assembly Mounted Directly

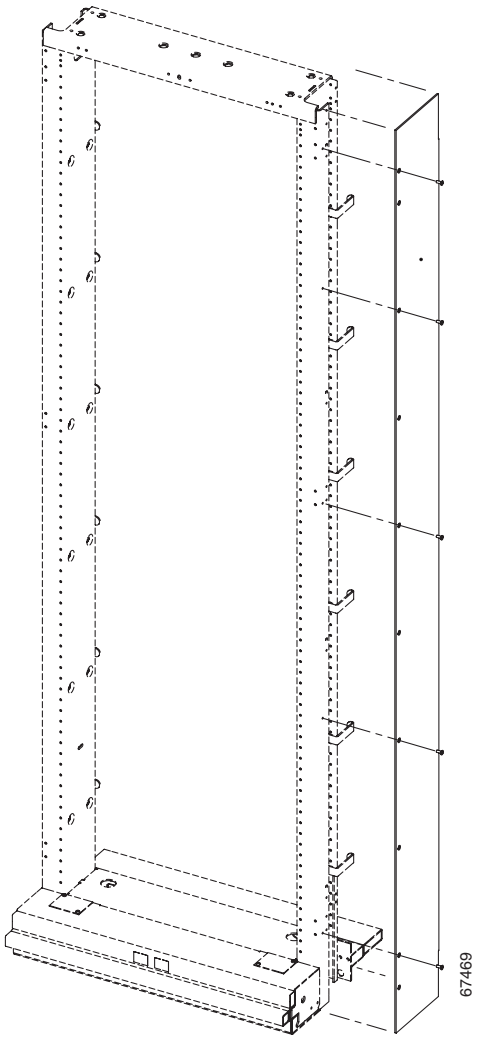

ONS 15454 Bay End Guard Kit

The ONS 15454 Bay End Guard Kit provides a full aisle guard with AC on/off switch cutout. It is used to complete the end of the aisle (about 2.50-inch (6.35-cm) wide or thick). The end guard may or may not have power (110 VAC), 110 VAC outlets, and a visual light for alarms. See Figure 42 for end guard components.

Figure 42 End Guard Assembly

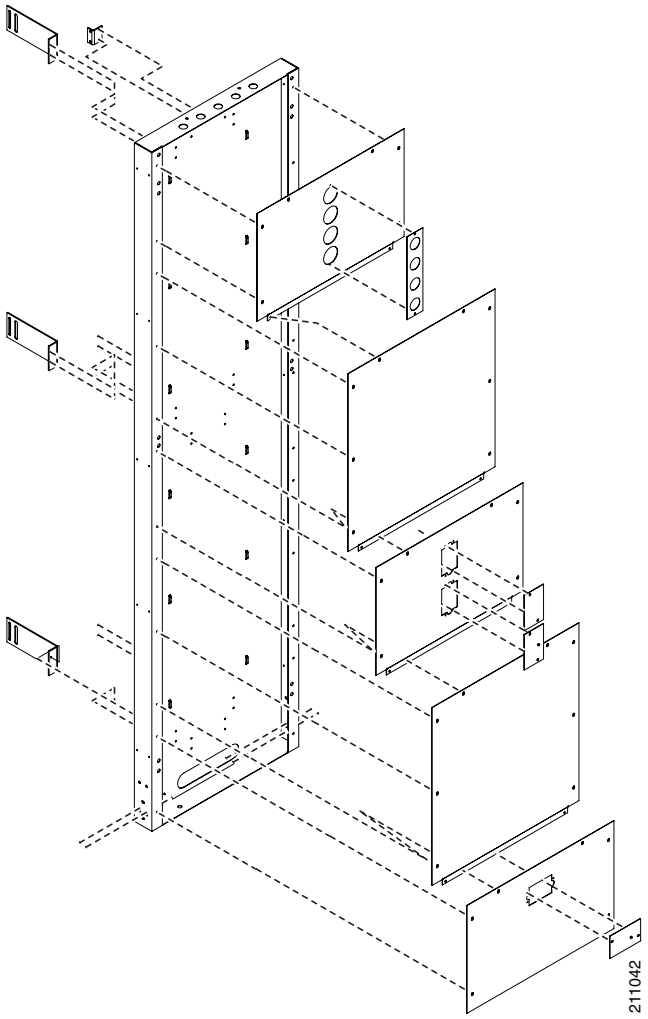

ONS 15454 First Aid Kit

The ONS 15454 First Aid Kit contains extra items such as tape, cord, tags, and cosmetic items such as touch-up paint to promote a quality installation.

This document is to be used in conjunction with Cisco ONS 15454 user documentation and 15454-FAP-LVD documentation.

CCVP, the Cisco logo, and Welcome to the Human Network are trademarks of Cisco Systems, Inc.; Changing the Way We Work, Live, Play, and Learn is a service mark of Cisco Systems, Inc.; and Access Registrar, Aironet, Catalyst, CCDA, CCDP, CCIE, CCIP, CCNA, CCNP, CCSP, Cisco, the Cisco Certified Internetwork Expert logo, Cisco IOS, Cisco Press, Cisco Systems, Cisco Systems Capital, the Cisco Systems logo, Cisco Unity, Enterprise/Solver, EtherChannel, EtherFast, EtherSwitch, Fast Step, Follow Me Browsing, FormShare, GigaDrive, HomeLink, Internet Quotient, IOS, iPhone, IP/TV, iQ Expertise, the iQ logo, iQ Net Readiness Scorecard, iQuick Study, LightStream, Linksys, MeetingPlace, MGX, Networkers, Networking Academy, Network Registrar, PIX, ProConnect, ScriptShare, SMARTnet, StackWise, The Fastest Way to Increase Your Internet Quotient, and TransPath are registered trademarks of Cisco Systems, Inc. and/or its affiliates in the United States and certain other countries.

All other trademarks mentioned in this document or Website are the property of their respective owners. The use of the word partner does not imply a partnership relationship between Cisco and any other company. (0711R)

Copyright © 2007, Cisco Systems, Inc.
All rights reserved.