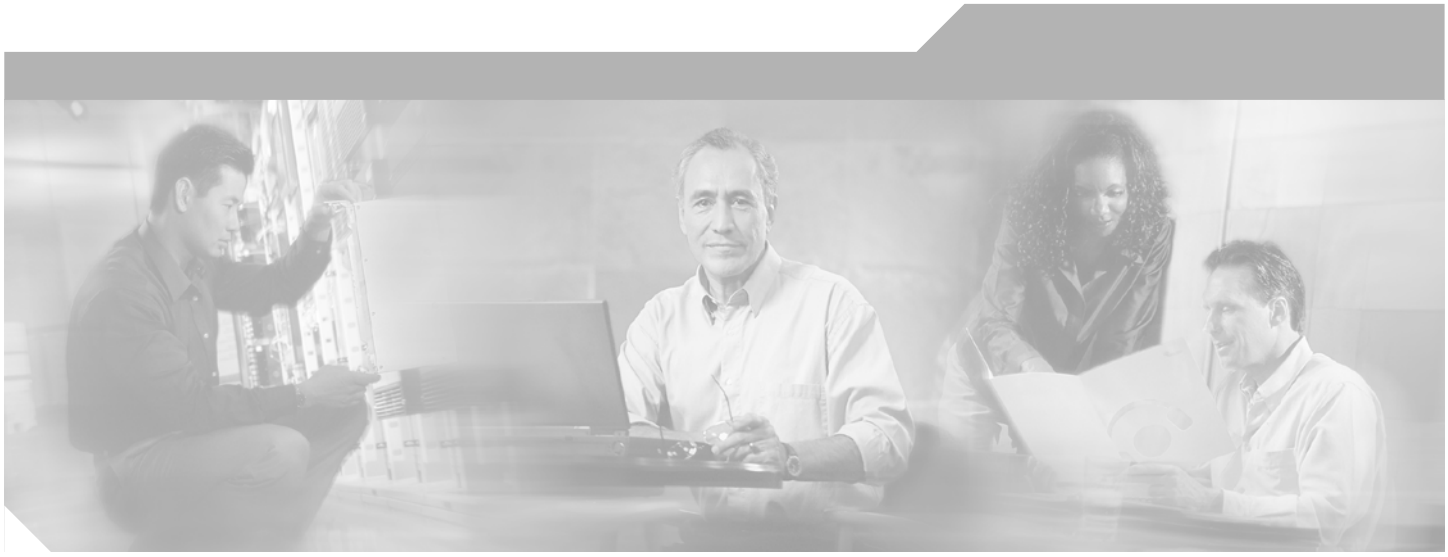

Cisco ONS 15454 DWDM Installation and Operations Guide

Product and Software Release 4.7
Last Updated: August 27, 2007

Corporate Headquarters
Cisco Systems, Inc.
170 West Tasman Drive
San Jose, CA 95134-1706
USA
http://www.cisco.com
Tel: 408 526-4000
800 553-NETS (6387)
Fax: 408 526-4100

Customer Order Number: DOC-7816539=
Text Part Number: 78-16539-01

THE SPECIFICATIONS AND INFORMATION REGARDING THE PRODUCTS IN THIS MANUAL ARE SUBJECT TO CHANGE WITHOUT NOTICE. ALL STATEMENTS, INFORMATION, AND RECOMMENDATIONS IN THIS MANUAL ARE BELIEVED TO BE ACCURATE BUT ARE PRESENTED WITHOUT WARRANTY OF ANY KIND, EXPRESS OR IMPLIED. USERS MUST TAKE FULL RESPONSIBILITY FOR THEIR APPLICATION OF ANY PRODUCTS.

THE SOFTWARE LICENSE AND LIMITED WARRANTY FOR THE ACCOMPANYING PRODUCT ARE SET FORTH IN THE INFORMATION PACKET THAT SHIPPED WITH THE PRODUCT AND ARE INCORPORATED HEREIN BY THIS REFERENCE. IF YOU ARE UNABLE TO LOCATE THE SOFTWARE LICENSE OR LIMITED WARRANTY, CONTACT YOUR CISCO REPRESENTATIVE FOR A COPY.

The following information is for FCC compliance of Class A devices: This equipment has been tested and found to comply with the limits for a Class A digital device, pursuant to part 15 of the FCC rules. These limits are designed to provide reasonable protection against harmful interference when the equipment is operated in a commercial environment. This equipment generates, uses, and can radiate radio-frequency energy and, if not installed and used in accordance with the instruction manual, may cause harmful interference to radio communications. Operation of this equipment in a residential area is likely to cause harmful interference, in which case users will be required to correct the interference at their own expense.

The following information is for FCC compliance of Class B devices: The equipment described in this manual generates and may radiate radio-frequency energy. If it is not installed in accordance with Cisco's installation instructions, it may cause interference with radio and television reception. This equipment has been tested and found to comply with the limits for a Class B digital device in accordance with the specifications in part 15 of the FCC rules. These specifications are designed to provide reasonable protection against such interference in a residential installation. However, there is no guarantee that interference will not occur in a particular installation.

Modifying the equipment without Cisco's written authorization may result in the equipment no longer complying with FCC requirements for Class A or Class B digital devices. In that event, your right to use the equipment may be limited by FCC regulations, and you may be required to correct any interference to radio or television communications at your own expense.

You can determine whether your equipment is causing interference by turning it off. If the interference stops, it was probably caused by the Cisco equipment or one of its peripheral devices. If the equipment causes interference to radio or television reception, try to correct the interference by using one or more of the following measures:

• Turn the television or radio antenna until the interference stops.

• Move the equipment to one side or the other of the television or radio.

• Move the equipment farther away from the television or radio.

• Plug the equipment into an outlet that is on a different circuit from the television or radio. (That is, make certain the equipment and the television or radio are on circuits controlled by different circuit breakers or fuses.)

Modifications to this product not authorized by Cisco Systems, Inc. could void the FCC approval and negate your authority to operate the product.

The Cisco implementation of TCP header compression is an adaptation of a program developed by the University of California, Berkeley (UCB) as part of UCB's public domain version of the UNIX operating system. All rights reserved. Copyright © 1981, Regents of the University of California.

NOTWITHSTANDING ANY OTHER WARRANTY HEREIN, ALL DOCUMENT FILES AND SOFTWARE OF THESE SUPPLIERS ARE PROVIDED "AS IS" WITH ALL FAULTS. CISCO AND THE ABOVE-NAMED SUPPLIERS DISCLAIM ALL WARRANTIES, EXPRESSED OR IMPLIED, INCLUDING, WITHOUT LIMITATION, THOSE OF MERCHANTABILITY, FITNESS FOR A PARTICULAR PURPOSE AND NONINFRINGEMENT OR ARISING FROM A COURSE OF DEALING, USAGE, OR TRADE PRACTICE.

IN NO EVENT SHALL CISCO OR ITS SUPPLIERS BE LIABLE FOR ANY INDIRECT, SPECIAL, CONSEQUENTIAL, OR INCIDENTAL DAMAGES, INCLUDING, WITHOUT LIMITATION, LOST PROFITS OR LOSS OR DAMAGE TO DATA ARISING OUT OF THE USE OR INABILITY TO USE THIS MANUAL, EVEN IF CISCO OR ITS SUPPLIERS HAVE BEEN ADVISED OF THE POSSIBILITY OF SUCH DAMAGES.

CCVP, the Cisco logo, and the Cisco Square Bridge logo are trademarks of Cisco Systems, Inc.; Changing the Way We Work, Live, Play, and Learn is a service mark of Cisco Systems, Inc.; and Access Registrar, Aironet, BPX, Catalyst, CCDA, CCDP, CCIE, CCIP, CCNA, CCNP, CCSP, Cisco, the Cisco Certified Internetwork Expert logo, Cisco IOS, Cisco Press, Cisco Systems, Cisco Systems Capital, the Cisco Systems logo, Cisco Unity, Enterprise/Solver, EtherChannel, EtherFast, EtherSwitch, Fast Step, Follow Me Browsing, FormShare, GigaDrive, HomeLink, Internet Quotient, IOS, iPhone, IP/TV, iQ Expertise, the iQ logo, iQ Net Readiness Scorecard, iQuick Study, LightStream, Linksys, MeetingPlace, MGX, Networking Academy, Network Registrar, *Packet*, PIX, ProConnect, ScriptShare, SMARTnet, StackWise, The Fastest Way to Increase Your Internet Quotient, and TransPath are registered trademarks of Cisco Systems, Inc. and/or its affiliates in the United States and certain other countries.

All other trademarks mentioned in this document or Website are the property of their respective owners. The use of the word partner does not imply a partnership relationship between Cisco and any other company. (0705R)

Cisco ONS 15454 DWDM Installation and Operations Guide
Copyright © 2007 Cisco Systems, Inc. All rights reserved.

About this Guide lv

Revision History lv

Document Objectives lv

Audience lvi

Document Organization lvi

Related Documentation lvii

Document Conventions lvii

Where to Find Safety and Warning Information lviii

Obtaining Documentation lviii

Cisco.com lix

Ordering Documentation lix

Cisco Optical Networking Product Documentation CD-ROM lix

Documentation Feedback lix

Obtaining Technical Assistance lx

Cisco Technical Support Website lx

Submitting a Service Request lx

Definitions of Service Request Severity lx

Obtaining Additional Publications and Information lxi

CHAPTER 1 **Install the Shelf and Common Control Cards** 1-1

Before You Begin 1-1

Required Tools and Equipment (ANSI) 1-2

Cisco-Supplied Materials (ANSI) 1-3

User-Supplied Materials (ANSI) 1-3

Tools Needed (ANSI) 1-4

Test Equipment (ANSI) 1-4

Required Tools and Equipment (ETSI) 1-4

Cisco-Supplied Equipment (ETSI) 1-4

User-Supplied Equipment (ETSI) 1-5

Tools Needed (ETSI) 1-5

Test Equipment (ETSI) 1-6

NTP- G1 Unpack and Inspect the Shelf Assembly 1-6

DLP- G1 Unpack and Verify the Shelf Assembly 1-6

DLP- G2 Inspect the Shelf Assembly 1-7
NTP- G2 Install the Shelf Assembly 1-8
DLP- G3 Reverse the Mounting Bracket to Fit a 19-inch (482.6-mm) Rack (ANSI Only) 1-10
DLP- G4 Install the External Brackets and Air Filter (ANSI Only) 1-11
DLP- G5 Mount the Shelf Assembly in a Rack (One Person) 1-13
DLP- G6 Mount the Shelf Assembly in a Rack (Two People) 1-15
DLP- G7 Mount Multiple Shelf Assemblies in a Rack 1-16
DLP- G8 Install the Air Ramp 1-19
NTP- G3 Open and Remove the Front Door 1-20
DLP- G9 Open the Front Cabinet Compartment (Door) 1-20
DLP- G10 Remove the Front Door 1-21
NTP- G4 Open and Remove the FMEC Cover (ETSI Only) 1-23
DLP- G11 Open the FMEC Cover 1-24
DLP- G12 Remove the FMEC Cover 1-25
NTP- G5 Remove the Backplane Covers (ANSI Only) 1-26
DLP- G13 Remove the Lower Backplane Cover 1-26
DLP- G14 Remove the Backplane Sheet Metal Cover 1-27
NTP- G6 Install the MIC-A/P and MIC-T/C/P FMECs (ETSI Only) 1-27
NTP- G7 Install the Power and Ground 1-30
DLP- G15 Connect the Office Ground to the ONS 15454 ETSI 1-32
DLP- G16 Connect the Office Ground to the ONS 15454 ANSI 1-33
DLP- G17 Connect Office Power to the ONS 15454 ETSI 1-35
DLP- G18 Connect Office Power to the ONS 15454 ANSI 1-37
DLP- G19 Turn On and Verify Office Power 1-39
NTP- G8 Install the Fan-Tray Assembly 1-40
NTP- G9 Install the Alarm Expansion Panel (ANSI Only) 1-44
NTP- G10 Attach Wires to Alarm, Timing, LAN, and Craft Pin Connections 1-47
DLP- G20 Install Alarm Wires on the MIC-A/P (ETSI Only) 1-48
DLP- G21 Install Timing Wires on the MIC-C/T/P (ETSI Only) 1-51
DLP- G22 Install LAN Wires on the MIC-C/T/P (ETSI Only) 1-52
DLP- G23 Install Alarm Wires on the Backplane (ANSI Only) 1-53
DLP- G24 Install Timing Wires on the Backplane (ANSI Only) 1-56
DLP- G25 Install LAN Wires on the Backplane (ANSI Only) 1-57
DLP- G26 Install the TL1 Craft Interface (ANSI Only) 1-58
NTP- G11 Install an External Wire-Wrap Panel on the AEP (ANSI Only) 1-59
NTP- G12 Install and Close the FMEC Cover (ETSI Only) 1-63
NTP- G13 Install the Rear Cover (ANSI Only) 1-65
NTP- G14 Install DWDM Equipment 1-66

DLP- G27 Install the DCU Shelf Assembly 1-67
DLP- G28 Install the Fiber Patch Panel Shelf 1-68
DLP- G29 Install the Fiber Storage Shelf 1-68
DLP- G30 Install the FlexLayer Shelf 1-69
DLP- G31 Install the FlexLayer Modules 1-69
DLP- G32 Install the Y-Cable Protection Modules 1-71
NTP- G15 Install the Common Control Cards 1-72
DLP- G33 Install the TCC2 Card 1-73
DLP- G34 Install the AIC or AIC-I Card 1-76
NTP- G16 Perform the Shelf Installation Acceptance Test 1-77
DLP- G35 Inspect the Shelf Installation and Connections 1-78
DLP- G36 Measure Voltage 1-79

CHAPTER 2 **Connect the PC and Log into the GUI** 2-1
Before You Begin 2-1
NTP- G17 Set Up Computer for CTC 2-2
DLP- G37 Run the CTC Installation Wizard for Windows 2-3
DLP- G38 Run the CTC Installation Wizard for UNIX 2-6
NTP- G18 Set Up CTC Computer for Local Craft Connection to the ONS 15454 2-9
DLP- G39 Set Up a Windows PC for Craft Connection to an ONS 15454 on the Same Subnet Using Static IP Addresses 2-11
DLP- G40 Set Up a Windows PC for Craft Connection to an ONS 15454 Using Dynamic Host Configuration Protocol 2-13
DLP- G41 Set Up a Windows PC for Craft Connection to an ONS 15454 Using Automatic Host Detection 2-15
DLP- G42 Set Up a Solaris Workstation for a Craft Connection to an ONS 15454 2-18
NTP- G19 Set Up a CTC Computer for a Corporate LAN Connection to the ONS 15454 2-20
DLP- G43 Disable Proxy Service Using Internet Explorer (Windows) 2-21
DLP- G44 Disable Proxy Service Using Netscape (Windows and UNIX) 2-21
NTP- G20 Set Up a Remote Access Connection to the ONS 15454 2-22
NTP- G21 Log into the ONS 15454 GUI 2-23
DLP- G45 Connect Computer to the ONS 15454 2-24
DLP- G46 Log into CTC 2-25
DLP- G47 Install Public-Key Security Certificate 2-28
DLP- G48 Create Login Node Groups 2-29
DLP- G49 Add a Node to the Current Session or Login Group 2-30
DLP- G50 Delete a Node from the Current Session or Login Group 2-31
DLP- G51 Delete a Node from a Specified Login Node Group 2-31
DLP- G52 Change the JRE Version 2-32

DLP- G53 Configure the CTC Alerts Dialog Box for Automatic Popup 2-33

CHAPTER 3 **Turn Up a Node** 3-1

Before You Begin 3-1

NTP- G22 Verify Common Card Installation 3-2

NTP- G23 Create Users and Assign Security 3-3

DLP- G54 Create a New User—Single Node 3-4

DLP- G55 Create a New User—Multiple Nodes 3-4

NTP- G24 Set Up Name, Date, Time, and Contact Information 3-6

NTP- G25 Set Power Monitor Thresholds 3-8

NTP- G26 Set Up CTC Network Access 3-8

DLP- G56 Provision IP Settings 3-9

DLP- G57 Set the IP Address, Default Router, and Network Mask Using the LCD 3-13

DLP- G58 Create a Static Route 3-15

DLP- G59 Set Up or Change Open Shortest Path First Protocol 3-16

DLP- G60 Set Up or Change Routing Information Protocol 3-18

NTP- G27 Set Up the ONS 15454 for Firewall Access 3-19

DLP- G61 Provision the IIOP Listener Port on the ONS 15454 3-20

DLP- G62 Provision the IIOP Listener Port on the CTC Computer 3-22

NTP- G28 Set Up SNMP 3-22

NTP- G29 Preprovision a Slot 3-24

NTP- G30 Install the DWDM Cards 3-26

NTP- G31 Install the DWDM Dispersion Compensating Units 3-28

NTP- G32 Install the Transponder and Muxponder Cards 3-30

DLP- G63 Install an SFP 3-32

DLP- G64 Remove an SFP 3-32

NTP- G33 Create a Y-Cable Protection Group 3-33

NTP- G34 Install Fiber-Optic Cables on DWDM Cards 3-35

DLP- G65 Install Fiber-Optic Cables for OSC Link Terminations on All Nodes 3-37

DLP- G66 Install Fiber-Optic Cables for a Hub Node 3-40

DLP- G67 Install Fiber-Optic Cables for a Terminal Node 3-43

DLP- G68 Install Fiber-Optic Cables for a Line Amplifier Node 3-44

DLP- G69 Install Fiber-Optic Cables for an OSC Regeneration Node 3-46

DLP- G70 Install Fiber-Optic Cables for an Amplified or Passive OADM Node 3-48

DLP- G71 Install Fiber-Optic Cables for an ROADM Node 3-53

NTP- G35 Route Fiber-Optic Cables 3-55

NTP- G36 Calculate Cable Connections 3-56

DLP- G72 Create a DWDM Connection 3-57

DLP- G73 Delete a DWDM Connection 3-57
NTP- G37 Run Automatic Node Setup 3-58
DLP- G74 Import a Cisco MetroPlanner Configuration File 3-59
NTP- G38 Provision Terminations and Ring ID 3-60
DLP- G75 Create OSC Terminations 3-61
DLP- G76 Provision GCC Terminations 3-62
DLP- G77 Provision the Ring ID 3-63
NTP- G39 Verify OSCM and OSC-CSM Transmit Power 3-63
NTP- G40 Replace the Front Door 3-64

CHAPTER 4 **Perform Node Acceptance Tests** 4-1
Before You Begin 4-1
NTP- G41 Perform the Terminal and Hub Node with 32MUX-O and 32DMX-O Cards Acceptance Test 4-2
NTP- G42 Perform the Terminal Node with 32WSS and 32DMX Cards Acceptance Test 4-4
NTP- G43 Perform the ROADM Node Acceptance Test 4-6
NTP- G44 Perform the Anti-ASE Hub Node Acceptance Test 4-8
NTP- G45 Perform the Symmetric Line Node with OSCM Cards Acceptance Test 4-10
NTP- G46 Perform the Symmetric Line Node with OSC-CSM Cards Acceptance Test 4-12
NTP- G47 Perform the Asymmetric Line Node with OSC-CSM and OSCM Cards Acceptance Test 4-13
NTP- G48 Perform the Symmetric OADM Node with OSCM Cards Acceptance Test 4-16
NTP- G49 Perform the Symmetric OADM Node with OSC-CSM Cards Acceptance Test 4-18
NTP- G50 Perform the Symmetric Passive OADM Node with OSC-CSM Cards Acceptance Test 4-20
DLP- G78 Verify the 32MUX-O and 32DMX-O Power 4-22
DLP- G79 Verify the OPT-BST Amplifier Laser and Power 4-22
DLP- G80 Verify the OPT-PRE Amplifier Laser and Power 4-23
DLP- G81 Verify the 32DMX-O or 32DMX Power 4-24
DLP- G82 Verify the OSC-CSM Power 4-24
DLP- G83 Verify the OSC-CSM Power—OADM Nodes 4-25
DLP- G84 Verify the OSC-CSM Incoming Power 4-25
DLP- G85 Verify Express Channel Connections—OADM Node with OSCM Cards 4-26
DLP- G86 Verify Express Channel Connections—OADM Node with OSC-CSM Cards 4-27
DLP- G87 Verify the AD-xB-xx.x Output Express Power 4-28
DLP- G88 Verify the AD-xC-xx.x Output Express Power 4-28
DLP- G89 Verify OADM Node Pass-Through Channel Connections 4-29
DLP- G90 Verify an AD-xB-xx.x Pass-Through Connection Power 4-30
DLP- G91 Verify an AD-xC-xx.x Pass-Through Connection 4-31
DLP- G92 Verify an 4MD-xx.x Pass-Through Connection Power 4-32

DLP- G93 Verify Add and Drop Connections on OADM Node with OSCM Card 4-33
DLP- G94 Verify Add and Drop Connections on OADM Node with OSC-CSM Card 4-35

CHAPTER 5 **Turn Up Network** 5-1
Before You Begin 5-1
NTP- G51 Verify DWDM Node Turn Up 5-2
NTP- G52 Verify Node-to-Node Connections 5-3
NTP- G53 Set Up Timing 5-4
DLP- G95 Set Up External or Line Timing 5-4
DLP- G96 Set Up Internal Timing 5-6
NTP- G54 Provision and Verify a DWDM Network 5-7
DLP- G97 Provision a Proxy Tunnel 5-10
DLP- G98 Provision a Firewall Tunnel 5-11
DLP- G99 Create a Provisionable Patchcord 5-12
NTP- G55 Verify the Optical Receive Power 5-13
NTP- G56 Verify the OSNR 5-14
NTP- G57 Create a Logical Network Map 5-15

CHAPTER 6 **Create Channels and Circuits** 6-1
Before You Begin 6-1
NTP- G58 Locate and View Optical Channel Network Connections 6-2
DLP- G100 Search for Optical Channel Network Connections 6-2
DLP- G101 View Optical Channel Network Connection Information 6-3
DLP- G102 Filter the Display of Optical Channel Network Connections 6-6
DLP- G103 View Optical Channel Network Connections on a Span 6-7
NTP- G59 Create and Delete Optical Channel Network Connections 6-8
DLP- G104 Assign a Name to a Port 6-8
DLP- G105 Provision DWDM Optical Channel Network Connections 6-9
DLP- G106 Delete Optical Channel Network Connections 6-11
NTP- G60 Create Overhead Circuits 6-12
DLP- G107 Create an IP-Encapsulated Tunnel 6-13
DLP- G108 Change the Service State for a Port 6-14
DLP- G109 Provision Orderwire 6-15
DLP- G110 Create a User Data Channel Circuit 6-16
NTP- G61 Modify and Delete Overhead Circuits 6-17
DLP- G111 Repair an IP Tunnel 6-17
DLP- G112 Delete Overhead Circuits 6-18
NTP- G62 Create a J0 Section Trace 6-18

CHAPTER 7 **Manage Alarms** 7-1

Before You Begin 7-1

NTP- G63 Document Existing Provisioning 7-2

DLP- G113 Print CTC Data 7-2

DLP- G114 Export CTC Data 7-4

NTP- G64 View Alarms, History, Events, and Conditions 7-5

DLP- G115 View Alarms 7-6

DLP- G116 View Alarm or Event History 7-8

DLP- G117 Change the Maximum Number of Session Entries for Alarm History 7-10

DLP- G118 Display Alarms and Conditions Using Time Zone 7-11

DLP- G119 Synchronize Alarms 7-11

DLP- G120 View Conditions 7-12

NTP- G65 Delete Cleared Alarms from Display 7-13

NTP- G66 View Alarm-Affected Circuits 7-14

NTP- G67 View Alarm Counts on the LCD for a Node, Slot, or Port 7-16

NTP- G68 Create, Download, and Assign Alarm Severity Profiles 7-17

DLP- G121 Create a New or Cloned Alarm Severity Profile 7-18

DLP- G122 Download an Alarm Severity Profile 7-22

DLP- G123 Apply Alarm Profiles to Ports 7-23

DLP- G124 Apply Alarm Profiles to Cards and Nodes 7-26

DLP- G125 Delete Alarm Severity Profiles 7-27

NTP- G69 Enable, Modify, or Disable Alarm Severity Filtering 7-29

DLP- G126 Enable Alarm Filtering 7-29

DLP- G127 Modify Alarm, Condition, and History Filtering Parameters 7-30

DLP- G128 Disable Alarm Filtering 7-32

NTP- G70 Suppress Alarms or Discontinue Alarm Suppression 7-33

DLP- G129 Suppress Alarm Reporting 7-33

DLP- G130 Discontinue Alarm Suppression 7-35

NTP- G71 Provision External Alarms and Controls on the Alarm Interface Controller Card 7-36

NTP- G72 Provision External Alarms and Controls on the Alarm Interface Controller-International 7-38

CHAPTER 8 **Monitor Performance** 8-1

Before You Begin 8-1

NTP- G73 Change the PM Display 8-2

DLP- G131 Refresh PM Counts at 15-Minute Intervals 8-2

DLP- G132 Refresh PM Counts at One-Day Intervals 8-3

DLP- G133 View Near-End PM Counts 8-4

DLP- G134 View Far-End PM Counts 8-4

DLP- G135 Reset Current PM Counts 8-5
DLP- G136 Clear Selected PM Counts 8-6
DLP- G137 Set Auto-Refresh Interval for Displayed PM Counts 8-6
DLP- G138 Refresh PM Counts for a Different Port 8-7
NTP- G74 Monitor DWDM Card Performance 8-8
DLP- G139 View Optical Service Channel PM Parameters 8-8
DLP- G140 View Optical Amplifier PM Parameters 8-10
DLP- G141 View PMs for 32MUX-O, 32-WSS, 32-DMX-O, and 32DMX Cards 8-11
DLP- G142 View Channel Filter Optical Add/Drop Multiplexer PM Parameters 8-12
DLP- G143 View Band Filter Optical Add/Drop Multiplexer PM Parameters 8-14
NTP- G75 Monitor Transponder and Muxponder Performance 8-15
DLP- G144 Enable/Disable OTN ITU-T G.709 Performance Monitoring 8-16
DLP- G145 Enable/Disable OTN FEC Performance Monitoring 8-17
DLP- G146 View Optics PM Parameters 8-18
DLP- G147 View Payload PM Parameters 8-19
DLP- G148 View OTN PM Parameters 8-21
DLP- G149 View Payload Statistics PM Parameters 8-22
DLP- G150 View Payload Utilization PM Parameters 8-24
DLP- G151 View Payload History PM Parameters 8-25
DLP- G152 View Payload SONET PM Parameters 8-26
DLP- G153 Create RMON Alarm Thresholds 8-28
DLP- G154 Delete RMON Alarm Thresholds 8-30

CHAPTER 9 **Manage the Node** 9-1
Before You Begin 9-1
NTP- G76 Verify Span Loss 9-2
DLP- G155 Verify Optical Span Loss Using CTC 9-3
DLP- G156 Measure Span Insertion Loss Using an OTDR 9-4
NTP- G77 Manage Automatic Power Control 9-4
DLP- G157 Disable Automatic Power Control 9-5
DLP- G158 Enable Automatic Power Control 9-5
DLP- G159 Refresh Automatic Power Control Information 9-6
NTP- G78 View ROADM Node Power Equalization 9-6
NTP- G79 Modify Automatic Node Setup Parameters 9-7
NTP- G80 Change Node Management Information 9-8
DLP- G160 Change the Node Name, Date, Time, and Contact Information 9-8
DLP- G161 Change the Login Legal Disclaimer 9-9
NTP- G81 Change CTC Network Access 9-10
DLP- G162 Change IP Settings 9-11

DLP- G163 Modify a Static Route 9-12
DLP- G164 Delete a Static Route 9-13
DLP- G165 Disable OSPF 9-13
DLP- G166 Delete a Proxy Tunnel 9-14
DLP- G167 Delete a Firewall Tunnel 9-14
NTP- G82 Customize the CTC Network View 9-15
DLP- G168 Change the Network View Background Color 9-15
DLP- G169 Change the Default Network View Background Map 9-16
DLP- G170 Apply a Custom Network View Background Map 9-17
DLP- G171 Create Domain Icons 9-17
DLP- G172 Manage Domain Icons 9-18
DLP- G173 Enable Dialog Box Do-Not-Display Option 9-19
DLP- G174 Switch Between TDM and DWDM Network Views 9-20
NTP- G83 Modify or Delete Card Protection Settings 9-20
DLP- G175 Modify a Y-Cable Protection Group 9-21
DLP- G176 Modify a Splitter Protection Group 9-22
DLP- G177 Delete a Y-Cable Protection Group 9-22
NTP- G84 Initiate and Clear Y-Cable and Splitter External Switching Commands 9-23
DLP- G178 Apply a Manual Y-Cable or Splitter Protection Switch 9-24
DLP- G179 Apply a Force Y-Cable or Splitter Protection Switch 9-24
DLP- G180 Clear a Manual or Force Y-Cable or Splitter Protection Switch 9-25
DLP- G181 Apply a Lock On 9-26
DLP- G182 Apply a Lock Out 9-26
DLP- G183 Clear a Lock On or Lock Out 9-27
NTP- G85 Modify or Delete Communications Channel Terminations and Provisionable Patchcords 9-28
DLP- G184 Change a GCC Termination 9-28
DLP- G185 Delete a GCC Termination 9-29
DLP- G186 Delete an OSC Termination 9-30
DLP- G187 Delete a Provisionable Patchcord 9-30
NTP- G86 Convert a Pass-Through Connection to an Add/Drop Connection 9-31
NTP- G87 Change Node Timing Parameters 9-32
NTP- G88 Modify Users and Change Security 9-34
DLP- G188 Change Security Policy—Single Node 9-34
DLP- G189 Change Security Policy—Multiple Nodes 9-36
DLP- G190 Change Node Access and PM Clearing Privilege 9-37
DLP- G191 Change User Password and Security Level—Single Node 9-38
DLP- G192 Change User Password and Security Level—Multiple Nodes 9-38
DLP- G193 Delete User—Single Node 9-39
DLP- G194 Delete User—Multiple Nodes 9-40

DLP- G195 Log Out a User—Single Node 9-40
DLP- G196 Log Out a User—Multiple Nodes 9-41
NTP- G89 Change SNMP Settings 9-42
DLP- G197 Modify SNMP Trap Destinations 9-42
DLP- G198 Delete SNMP Trap Destinations 9-43

CHAPTER 10 **Change Card Settings** 10-1
Before You Begin 10-1
NTP- G90 Modify Line Settings and PM Parameter Thresholds for Optical Service Channel Cards 10-2
DLP- G199 Change Optical Line Settings for OSCM and OSC-CSM Cards 10-3
DLP- G200 Change Line Threshold Settings for OSCM and OSC-CSM Cards 10-5
DLP- G201 Change Optical Line Parameters for OSCM and OSC-CSM Cards 10-6
DLP- G202 Change Optical Channel Threshold Settings for OSCM and OSC-CSM Cards 10-8
DLP- G203 Change Maintenance Settings for Automatic Laser Shutdown 10-9
NTP- G91 Modify Line Settings and PM Parameter Thresholds for Amplifier Cards 10-10
DLP- G204 Change Optical Line Settings for OPT-PRE and OPT-BST Amplifiers 10-10
DLP- G205 Change Optical Line Threshold Settings for OPT-PRE and OPT-BST Amplifiers 10-12
DLP- G206 Change Optical Amplifier Line Settings for OPT-PRE and OPT-BST Amplifiers 10-13
DLP- G207 Change Optical Channel Threshold Settings for OPT-PRE and OPT-BST Amplifiers 10-15
NTP- G92 Modify Line Settings and PM Parameter Thresholds for Multiplexer and Demultiplexer Cards 10-16
DLP- G208 Change Optical Line Settings for Multiplexer and Demultiplexer Cards 10-17
DLP- G209 Change Optical Line Threshold Settings for Multiplexer and Demultiplexer Cards 10-18
DLP- G210 Change Optical Channel Settings for Multiplexer and Demultiplexer Cards 10-19
DLP- G211 Change Optical Channel Threshold Settings for Multiplexer and Demultiplexer Cards 10-21
NTP- G93 Modify Line Settings and PM Parameter Thresholds for 32WSS Cards 10-22
DLP- G212 Change Optical Channel Parameters for the 32WSS Card 10-23
DLP- G213 Change Optical Channel Optics Thresholds for the 32WSS Card 10-25
DLP- G214 Change Optical Line Parameters for the 32WSS Card 10-26
DLP- G215 Change Optical Line Optics Thresholds for the 32WSS Card 10-28
NTP- G94 Provision Pluggable Port Modules 10-29
NTP- G95 Delete Pluggable Port Modules 10-31
NTP- G96 Modify Line Settings and PM Parameter Thresholds for TXP_MR_10G and TXP_MR_10E Cards 10-32
DLP- G216 Change Card Settings for TXP_MR_10G and TXP_MR_10E Cards 10-33
DLP- G217 Change Line Settings for TXP_MR_10G and TXP_MR_10E Cards 10-34
DLP- G218 Change Section Trace Settings for the TXP_MR_10G Card 10-37
DLP- G219 Change Line Threshold Settings for TXP_MR_10G and TXP_MR_10E Cards 10-38

DLP- G220 Change Optical Thresholds Settings for TXP_MR_10G and TXP_MR_10E Cards 10-39
DLP- G221 Change OTN Settings for TXP_MR_10G and TXP_MR_10E Cards 10-40
NTP- G97 Modify Line Settings and PM Parameter Thresholds for MXP_2.5G_10G and MXP_2.5G_10E Cards 10-43
DLP- G222 Change Card Settings for MXP_2.5G_10G and MXP 2.5G_10E Cards 10-44
DLP- G223 Change Line Settings for MXP_2.5G_10G and MXP 2.5G_10E Cards 10-45
DLP- G224 Change Section Trace Settings for MXP_2.5G_10G and MXP_2.5G_10E Cards 10-47
DLP- G225 Change Trunk Settings for MXP_2.5G_10G and MXP_2.5G_10E Cards 10-48
DLP- G226 Change Line Thresholds Settings for MXP_2.5G_10G and MXP 2.5G_10E Cards 10-49
DLP- G227 Change Optical Threshold Settings for MXP_2.5G_10G and MXP_2.5G_10E Cards 10-51
DLP- G228 Change Line OTN Settings for MXP_2.5G_10G and MXP_2.5G_10E Cards 10-52
NTP- G98 Modify Line Settings and PM Parameter Thresholds for TXP_MR_2.5G and TXPP_MR_2.5G Cards 10-55
DLP- G229 Change Card Settings for TXP_MR_2.5G and TXPP_MR_2.5G Cards 10-55
DLP- G230 Change Line Settings for TXP_MR_2.5G and TXPP_MR_2.5G Cards 10-57
DLP- G231 Change Section Trace Settings for TXP_MR_2.5G and TXPP_MR_2.5G Cards 10-58
DLP- G232 Change Line Threshold Settings for TXP_MR_2.5G and TXPP_MR_2.5G Cards 10-59
DLP- G233 Change Optical Thresholds Settings for TXP_MR_2.5G and TXPP_MR_2.5G Cards 10-61
DLP- G234 Change OTN Settings for TXP_MR_2.5G and TXPP_MR_2.5G Cards 10-62
NTP- G99 Modify Line Settings and PM Parameter Thresholds for MXP_MR_2.5G and MXPP_MR_2.5G Cards 10-65
DLP- G235 Change Card Settings for MXP_MR_2.5G and MXPP_MR_2.5G Cards 10-66
DLP- G236 Change Line Settings for MXP_MR_2.5G and MXPP_MR_2.5G Cards 10-67
DLP- G237 Change Distance Extension Settings for MXP_MR_2.5G and MXPP_MR_2.5G Cards 10-69
DLP- G238 Change OC48 Settings for MXP_MR_2.5G and MXPP_MR_2.5G Cards 10-70
DLP- G239 Change Section Trace Settings for MXP_MR_2.5G and MXPP_MR_2.5G Cards 10-72
DLP- G240 Change Line Threshold Settings for MXP_MR_2.5G and MXPP_MR_2.5G Cards 10-73
DLP- G241 Change Optical Thresholds Settings for MXP_MR_2.5G and MXPP_MR_2.5G Cards 10-75
NTP- G100 Modify Alarm Interface Controller Settings (ANSI Only) 10-77
DLP- G242 Change External Alarms Using the AIC Card 10-77
DLP- G243 Change External Controls Using the AIC Card 10-78
DLP- G244 Change Orderwire Settings Using the AIC Card 10-79
NTP- G101 Modify Alarm Interface Controller–International Settings 10-80
DLP- G245 Change External Alarms Using the AIC-I Card 10-80
DLP- G246 Change External Controls Using the AIC-I Card 10-81

DLP- G247 Change AIC-I Card Orderwire Settings 10-82
NTP- G102 Change Card Service State 10-83

CHAPTER 11 **Maintain the Node** 11-1
Before You Begin 11-1
NTP- G103 Back Up the Database 11-2
NTP- G104 Restore the Database 11-3
NTP- G105 Restore the Node to Factory Configuration 11-5
DLP- G248 Use the Reinitialization Tool to Clear the Database and Upload Software (Windows) 11-6
DLP- G249 Use the Reinitialization Tool to Clear the Database and Upload Software (UNIX) 11-8
NTP- G106 Reset Cards Using CTC 11-10
DLP- G250 Reset the TCC2 Card 11-10
DLP- G251 Reset DWDM Cards Using CTC 11-11
NTP- G107 Remove and Replace DWDM Cards 11-12
DLP- G252 Place TXP and MXP Ports Out of Service 11-14
DLP- G253 Place OSCM and OSC-CSM Ports Out of Service 11-15
DLP- G254 Place OPT-BST and OPT-BST Ports Out of Service 11-16
DLP- G255 Place 32MUX-0, 32WSS, 32DMX-O, and 32DMX Ports Out of Service 11-16
DLP- G256 Place 4MD-xx.x Ports Out of Service 11-17
DLP- G257 Place Band OADM Ports Out of Service 11-18
DLP- G258 Place Channel OADM Ports Out of Service 11-18
NTP- G108 Viewing the Audit Trail Records 11-19
NTP- G109 Off-Load the Audit Trail Record 11-21
NTP- G110 Off-Load the Diagnostics File 11-22
NTP- G111 Revert to an Earlier Software Load 11-22
NTP- G112 Change the Node Timing Reference 11-24
DLP- G259 Manual or Force Switch the Node Timing Reference 11-24
DLP- G260 Clear a Manual or Force Switch on a Node Timing Reference 11-25
NTP- G113 View the ONS 15454 Timing Report 11-25
NTP- G114 Inspect, Clean, and Replace the Air Filter 11-29
NTP- G115 Clean Fiber Connectors 11-32
DLP- G261 Scope and Clean Fiber Connectors and Adapters with Alcohol and Dry Wipes 11-33
DLP- G262 Clean Fiber Connectors with CLETOP 11-34
DLP- G263 Clean the Fiber Adapters 11-34
NTP- G116 Replace the Fan-Tray Assembly 11-35
NTP- G117 Replace the ANSI Shelf Alarm Interface Panel 11-40
NTP- G118 Replace the ANSI Shelf Plastic Lower Backplane Cover 11-44

CHAPTER 12 **Power Down the Node** 12-1

NTP- G119 Power Down the Node 12-1

CHAPTER 13 **Shelf Hardware Reference** 13-1

13.1 Overview 13-2

13.1.1 Cisco ONS 15454 ANSI 13-2

13.1.2 Cisco ONS 15454 ETSI 13-3

13.2 ONS 15454 ANSI Rack Installation 13-3

13.2.1 Reversible Mounting Bracket 13-5

13.2.2 Mounting a Single Node 13-6

13.2.3 Mounting Multiple Nodes 13-6

13.2.4 ONS 15454 ANSI Bay Assembly 13-7

13.3 ONS 15454 ETSI Rack Installation 13-7

13.3.1 Mounting a Single Node 13-8

13.3.2 Mounting Multiple Nodes 13-9

13.4 FlexLayer and Y-Cable Protection 13-10

13.4.1 FlexLayer Modules 13-11

13.4.2 Y-Cable Protection Module 13-14

13.5 Typical DWDM Rack Layouts 13-16

13.6 Front Door 13-19

13.7 ONS 15454 ANSI Backplane Covers 13-26

13.7.1 Lower Backplane Cover 13-27

13.7.2 Rear Cover 13-28

13.7.3 Alarm Interface Panel 13-29

13.7.4 Alarm Interface Panel Replacement 13-30

13.8 ONS 15454 ETSI Front Mount Electrical Connection 13-30

13.9 ONS 15454 ANSI Alarm Expansion Panel 13-30

13.9.1 Wire-Wrap and Pin Connections 13-31

13.9.2 AEP Specifications 13-35

13.10 Cable Routing and Management 13-36

13.10.1 Fiber Management 13-37

13.10.2 Fiber Management Using the Optional Patch-Panel Module 13-39

13.10.3 Fiber Management Using the Optional DWDM Fiber Tray 13-39

13.10.4 Fiber Management Using the Optional ANSI Tie-Down Bar 13-40

13.11 Fan-Tray Assembly 13-41

13.11.1 Fan Speed and Power Requirements 13-42

13.11.2 Fan Failure 13-43

13.11.3 Air Filter 13-43

13.12 Power and Ground Description 13-43
13.12.1 ONS 15454 ANSI Power and Ground 13-43
13.12.2 ONS 15454 ETSI Power and Ground 13-44
13.13 ONS 15454 ANSI Alarm, Timing, LAN, and Craft Pin Connections 13-44
13.13.1 Alarm Contact Connections 13-47
13.13.2 Timing Connections 13-48
13.13.3 LAN Connections 13-48
13.13.4 TL1 Craft Interface Installation 13-49
13.14 Cards and Slots 13-49
13.14.1 Card Slot Requirements 13-51
13.14.2 Card Replacement 13-52
13.15 Ferrites (ANSI Only) 13-52

CHAPTER 14 **Card Reference** 14-1
14.1 Card Overview 14-2
14.1.1 Common Control Cards 14-2
14.1.2 Front Mount Electrical Connections (ETSI only) 14-2
14.1.3 DWDM Cards 14-2
14.1.4 Transponder and Muxponder Cards 14-3
14.1.5 Card Summary 14-3
14.1.6 Card Compatibility 14-6
14.1.7 Multiplexer, Demultiplexer, and OADM Card Interface Classes 14-7
14.1.8 DWDM Card Channel Allocation Plan 14-9
14.2 Common Control Cards 14-11
14.2.1 TCC2 Card 14-11
14.2.1.1 TCC2 Functionality 14-12
14.2.1.2 TCC2 Card-Level Indicators 14-13
14.2.1.3 Network-Level Indicators 14-13
14.2.2 AIC Card 14-14
14.2.2.1 External Alarms and Controls 14-15
14.2.2.2 Orderwire 14-15
14.2.3 AIC-I Card 14-17
14.2.3.1 AIC-I Card-Level Indicators 14-18
14.2.3.2 External Alarms and Controls 14-18
14.2.3.3 Orderwire 14-19
14.2.3.4 Power Monitoring 14-20
14.2.3.5 User Data Channel 14-20
14.2.3.6 Data Communications Channel 14-21
14.3 Front Mount Electrical Connections 14-21

14.3.1 MIC-A/P FMEC 14-21
14.3.1.1 MIC-A/P Connector Pinouts 14-22
14.3.2 MIC-C/T/P FMEC 14-24
14.3.2.1 MIC-C/T/P Port-Level Indicators 14-26
14.4 Optical Service Channel Cards 14-26
14.4.1 OSCM Card 14-26
14.4.1.1 Faceplate 14-26
14.4.1.2 Block Diagram 14-27
14.4.1.3 Power Monitoring 14-29
14.4.1.4 OSCM Card-Level Indicators 14-29
14.4.1.5 OSCM Port-Level Indicators 14-30
14.4.2 OSC-CSM Card 14-30
14.4.2.1 Faceplate 14-30
14.4.2.2 Block Diagram 14-31
14.4.2.3 Power Monitoring 14-34
14.4.2.4 OSC-CSM Card-Level Indicators 14-34
14.4.2.5 OSC-CSM Port-Level Indicators 14-35
14.5 Optical Amplifier Cards 14-35
14.5.1 OPT-PRE Amplifier 14-35
14.5.1.1 Faceplate 14-35
14.5.1.2 Block Diagrams 14-36
14.5.1.3 Power Monitoring 14-38
14.5.1.4 OPT-PRE Amplifier Card-Level Indicators 14-38
14.5.1.5 OPT-PRE Port-Level Indicators 14-39
14.5.2 OPT-BST Amplifier Card 14-39
14.5.2.1 Faceplate 14-39
14.5.2.2 Block Diagrams 14-40
14.5.2.3 Power Monitoring 14-42
14.5.2.4 OPT-BST Amplifier-Level Indicators 14-42
14.5.2.5 OPT-BST Port-Level Indicators 14-43
14.6 Multiplexer and Demultiplexer Cards 14-44
14.6.1 32MUX-O Card 14-44
14.6.1.1 Key Features 14-45
14.6.1.2 Faceplate 14-45
14.6.1.3 Block Diagrams 14-47
14.6.1.4 Power Monitoring 14-48
14.6.1.5 32MUX-O Card-Level Indicators 14-48
14.6.1.6 32MUX-O Port-Level Indicators 14-48
14.6.2 32DMX-O Card 14-48

14.6.2.1 Key Features 14-48
14.6.2.2 Faceplate 14-50
14.6.2.3 Block Diagrams 14-51
14.6.2.4 Power Monitoring 14-52
14.6.2.5 32DMX-O Card-Level Indicators 14-52
14.6.2.6 32DMX-O Port-Level Indicators 14-52
14.6.3 32DMX Card 14-52
14.6.3.1 Key Features 14-53
14.6.3.2 Faceplate 14-53
14.6.3.3 Block Diagrams 14-54
14.6.3.4 Power Monitoring 14-56
14.6.3.5 32DMX Card-Level Indicators 14-56
14.6.3.6 32DMX Port-Level Indicators 14-56
14.6.4 4MD-xx.x Card 14-57
14.6.4.1 Key Features 14-57
14.6.4.2 Faceplate 14-57
14.6.4.3 Block Diagrams 14-59
14.6.4.4 Power Monitoring 14-60
14.6.4.5 4MD-xx.x Card-Level Indicators 14-61
14.6.4.6 4MD-xx.x Port-Level Indicators 14-61
14.7 Optical Add/Drop Multiplexer Cards 14-62
14.7.1 AD-1C-xx.x Card 14-62
14.7.1.1 Faceplate 14-62
14.7.1.2 Block Diagrams 14-63
14.7.1.3 Power Monitoring 14-65
14.7.1.4 AD-1C-xx.x Card-Level Indicators 14-65
14.7.1.5 AD-1C-xx.x Port-Level Indicators 14-65
14.7.2 AD-2C-xx.x Card 14-65
14.7.2.1 Key Features 14-66
14.7.2.2 Faceplate 14-66
14.7.2.3 Block Diagrams 14-68
14.7.2.4 Power Monitoring 14-69
14.7.2.5 AD-2C-xx.x Card-Level Indicators 14-69
14.7.2.6 AD-2C-xx.x Port-Level Indicators 14-69
14.7.3 AD-4C-xx.x Card 14-69
14.7.3.1 Key Features 14-70
14.7.3.2 Faceplate 14-70
14.7.3.3 Block Diagram 14-71
14.7.3.4 Power Monitoring 14-73
14.7.3.5 AD-4C-xx.x Card-Level Indicators 14-73

14.7.3.6 AD-4C-xx.x Port-Level Indicators 14-73
14.7.4 AD-1B-xx.x Card 14-74
14.7.4.1 Key Features 14-74
14.7.4.2 Faceplate 14-74
14.7.4.3 Block Diagram 14-75
14.7.4.4 Power Monitoring 14-77
14.7.4.5 AD-1B-xx.x Card-Level Indicators 14-77
14.7.4.6 AD-1B-xx.x Port-Level Indicators 14-77
14.7.5 AD-4B-xx.x Card 14-78
14.7.5.1 Key Features 14-78
14.7.5.2 Faceplate 14-78
14.7.5.3 Block Diagram 14-79
14.7.5.4 Power Monitoring 14-81
14.7.5.5 AD-4B-xx.x Card-Level Indicators 14-81
14.7.5.6 AD-4B-xx.x Port-Level Indicators 14-81
14.7.6 32WSS Card 14-81
14.7.6.1 Faceplate 14-82
14.7.6.2 Block Diagrams 14-84
14.7.6.3 Power Monitoring 14-86
14.7.6.4 32WSS Card-Level Indicators 14-86
14.7.6.5 32WSS Port-Level Indicators 14-86
14.8 Transponder and Muxponder Cards 14-86
14.8.1 TXP_MR_10G Card 14-87
14.8.1.1 Faceplate and Block Diagram 14-88
14.8.1.2 TXP_MR_10G Card-Level Indicators 14-88
14.8.1.3 TXP_MR_10G Port-Level Indicators 14-89
14.8.2 TXP_MR_10E Card 14-90
14.8.2.1 Key Features 14-90
14.8.2.2 Faceplate and Block Diagram 14-91
14.8.2.3 Client Interface 14-91
14.8.2.4 DWDM Trunk Interface 14-92
14.8.2.5 Y-Cable Protection 14-92
14.8.2.6 Enhanced FEC (E-FEC) Feature 14-92
14.8.2.7 FEC and E-FEC Modes 14-93
14.8.2.8 Client-to-Trunk Mapping 14-93
14.8.2.9 TXP_MR_10E Card-Level Indicators 14-93
14.8.2.10 TXP_MR_10E Port-Level Indicators 14-94
14.8.3 TXP_MR_2.5G and TXPP_MR_2.5G Cards 14-94
14.8.3.1 Faceplate 14-96
14.8.3.2 Block Diagram 14-97

14.8.3.3 TXP_MR_2.5G and TXPP_MR_2.5G Safety Labels 14-98
14.8.3.4 TXP_MR_2.5G and TXPP_MR_2.5G Card-Level Indicators 14-100
14.8.3.5 TXP_MR_2.5G and TXPP_MR_2.5G Port-Level Indicators 14-100
14.8.4 MXP_2.5G_10G Card 14-101
14.8.4.1 Y-Cable Protection 14-101
14.8.4.2 Faceplate 14-102
14.8.4.3 Block Diagram 14-102
14.8.4.4 Timing Synchronization 14-103
14.8.4.5 MXP_2.5G_10G Card-Level Indicators 14-103
14.8.4.6 MXP_2.5G_10G Port-Level Indicators 14-104
14.8.5 MXP_2.5G_10E Card 14-104
14.8.5.1 Key Features 14-105
14.8.5.2 Faceplate 14-107
14.8.5.3 Client Interfaces 14-107
14.8.5.4 DWDM Interface 14-107
14.8.5.5 Multiplexing Function 14-108
14.8.5.6 Timing Synchronization 14-109
14.8.5.7 Y-Cable Protection 14-109
14.8.5.8 Enhanced FEC (E-FEC) Capability 14-109
14.8.5.9 FEC and E-FEC Modes 14-109
14.8.5.10 SONET/SDH Overhead Byte Processing 14-110
14.8.5.11 Client Interface Monitoring 14-110
14.8.5.12 Wavelength Identification 14-110
14.8.5.13 Automatic Laser Shutdown 14-111
14.8.5.14 Jitter 14-111
14.8.5.15 Lamp Test 14-111
14.8.5.16 Onboard Traffic Generation 14-111
14.8.5.17 MXP_2.5G_10E Card-Level Indicators 14-112
14.8.5.18 MXP_2.5G_10E Port-Level Indicators 14-112
14.8.6 MXP_MR_2.5G and MXPP_MR_2.5G Cards 14-113
14.8.6.1 Faceplates 14-115
14.8.6.2 Block Diagram 14-115
14.8.6.3 MXP_MR_2.5G and MXPP_MR_2.5G Safety Labels 14-117
14.8.6.4 MXP_MR_2.5G and MXPP_MR_2.5G Card-Level Indicators 14-118
14.8.6.5 MXP_MR_2.5G and MXPP_MR_2.5G Port-Level Indicators 14-119
14.9 Transponder and Muxponder Protection 14-119
14.9.1 Y-Cable Protection 14-119
14.9.2 Splitter Protection 14-120
14.10 Far-End Laser Control (FELC) 14-121

14.11 Transponder and Muxponder Jitter Considerations 14-121
14.12 Transponder and Muxponder Termination Modes 14-122
14.13 SFP Modules 14-123
14.13.1 Compatibility by Card 14-123
14.13.2 SFP Description 14-123

CHAPTER 15 **DWDM Node Reference** 15-1
15.1 DWDM Node Configurations 15-1
15.1.1 Hub Node 15-1
15.1.2 Terminal Node 15-3
15.1.3 OADM Node 15-4
15.1.4 ROADM Node 15-8
15.1.5 Anti-ASE Node 15-10
15.1.6 Line Amplifier Node 15-11
15.1.7 OSC Regeneration Node 15-12
15.2 Automatic Power Control 15-14
15.2.1 APC at the Amplifier Card Level 15-14
15.2.2 APC at the Node and Network Levels 15-15
15.2.3 Managing APC 15-16
15.3 ROADM Power Equalization Monitoring 15-18
15.4 Span Loss Verification 15-18
15.5 Automatic Node Setup 15-19
15.5.1 Automatic Node Setup Parameters 15-21
15.5.2 Viewing and Provisioning ANS Parameters 15-23

CHAPTER 16 **DWDM Network Reference** 16-1
16.1 Network Applications 16-1
16.2 Network Topologies 16-1
16.2.1 Hubbed Rings 16-2
16.2.2 Multihubbed Rings 16-2
16.2.3 Any-to-Any Rings 16-3
16.2.4 Meshed Rings 16-4
16.2.5 Linear Configurations 16-5
16.2.6 Single-Span Link 16-6
16.3 Optical Performance 16-6
16.3.1 Optical Performance for Rings and Linear Networks with OADM Nodes 16-8
16.3.2 Optical Performance for Linear Networks Without OADM Nodes 16-10
16.3.3 Optical Performance for ROADM Rings and Linear Networks 16-13

16.3.4 Optical Performance for Single-Span Networks 16-17
16.4 Network Optical Safety - Automatic Laser Shutdown 16-18
16.4.1 Scenario 1: Fiber Cut in Nodes Using OPT-BST or OPT-BST-E Cards 16-19
16.4.2 Scenario 2: Fiber Cut in Nodes Using OSC-CSM Cards 16-20

CHAPTER 17 **Cisco Transport Controller Operation** 17-1
17.1 CTC Software Delivery Methods 17-1
17.1.1 CTC Software Installed on the TCC2 Card 17-1
17.1.2 CTC Software Installed on the PC or UNIX Workstation 17-3
17.2 CTC Installation Overview 17-3
17.3 PC and UNIX Workstation Requirements 17-4
17.4 ONS 15454 Connections 17-6
17.5 CTC Window 17-7
17.5.1 Node View 17-7
17.5.1.1 CTC Card Colors 17-7
17.5.1.2 Node View Card Shortcuts 17-10
17.5.1.3 Node View Tabs 17-10
17.5.2 Network View 17-11
17.5.3 Card View 17-12
17.6 TCC2 Card Reset 17-14
17.7 TCC2 Card Database 17-15
17.8 Software Revert 17-15

CHAPTER 18 **Security and Timing** 18-1
18.1 Users and Security 18-1
18.1.1 Security Requirements 18-1
18.1.2 Security Policies 18-5
18.1.2.1 Idle User Timeout 18-5
18.1.2.2 User Password, Login, and Access Policies 18-6
18.1.2.3 Audit Trail 18-6
18.2 Node Timing 18-6
18.2.1 Network Timing Example 18-7
18.2.2 Synchronization Status Messaging 18-8

CHAPTER 19 **CTC Connectivity Reference** 19-1
19.1 IP Networking Overview 19-1
19.2 IP Addressing Scenarios 19-2
19.2.1 Scenario 1: CTC and ONS 15454s on Same Subnet 19-2

19.2.2 Scenario 2: CTC and ONS 15454s Connected to a Router 19-3
19.2.3 Scenario 3: Using Proxy ARP to Enable an ONS 15454 Gateway 19-4
19.2.4 Scenario 4: Default Gateway on CTC Computer 19-6
19.2.5 Scenario 5: Using Static Routes to Connect to LANs 19-7
19.2.6 Scenario 6: Using OSPF 19-9
19.2.7 Scenario 7: Provisioning the ONS 15454 Proxy Server 19-11
19.2.8 Scenario 8: Dual GNEs on a Subnet 19-17
19.3 Provisionable Patchcords 19-19
19.4 Routing Table 19-21
19.5 External Firewalls 19-22
19.6 Open GNE 19-24

CHAPTER 20 **Alarm Monitoring and Management** 20-1
20.1 Overview 20-1
20.2 Alarm Counts on the LCD for a Node, Slot, or Port 20-2
20.3 Alarm Display 20-2
20.3.1 Viewing Alarms With Each Node's Time Zone 20-2
20.3.2 Controlling Alarm Display 20-3
20.3.3 Filtering Alarms 20-3
20.3.4 Viewing Alarm-Affected Circuits 20-3
20.3.5 Conditions Tab 20-5
20.3.6 Controlling the Conditions Display 20-5
20.3.6.1 Retrieving and Displaying Conditions 20-5
20.3.6.2 Conditions Column Descriptions 20-6
20.3.6.3 Filtering Conditions 20-6
20.3.7 Viewing History 20-6
20.3.7.1 History Column Descriptions 20-7
20.3.7.2 Retrieving and Displaying Alarm and Condition History 20-8
20.4 Alarm Severities 20-8
20.5 Alarm Profiles 20-9
20.5.1 Creating and Modifying Alarm Profiles 20-9
20.5.2 Alarm Profile Buttons 20-10
20.5.3 Alarm Profile Editing 20-11
20.5.4 Alarm Severity Options 20-11
20.5.5 Row Display Options 20-12
20.5.6 Applying Alarm Profiles 20-12
20.6 Alarm Suppression 20-13
20.7 External Alarms and Controls 20-13

20.7.1 External Alarms 20-14
20.7.2 External Controls 20-14
20.7.3 Virtual Wires 20-14
20.8 Audit Trail 20-15
20.8.1 Audit Trail Log Entries 20-16
20.8.2 Audit Trail Capacities 20-16
Display Node, Card, and Network Views A-1
Node Icons on the Network View Map A-2
Manage the CTC Window A-4
CTC Menu and Toolbar Options A-5
CTC Mouse Options A-8
Node View Shortcuts A-10
Network View Tasks A-10
Table Display Options A-11
Equipment Inventory A-12
B.1 Shelf Specifications B-1
B.1.1 Bandwidth B-1
B.1.2 Configurations B-1
B.1.3 Cisco Transport Controller B-2
B.1.4 External LAN Interface B-2
B.1.5 TL1 Craft Interface B-2
B.1.6 Modem Interface B-2
B.1.7 Alarm Interface B-2
B.1.8 EIA Interface (ANSI only) B-3
B.1.9 BITS Interface (ANSI only) B-3
B.1.10 System Timing B-3
B.1.11 System Power B-3
B.1.12 System Environmental Specifications B-4
B.1.13 Dimensions B-4
B.2 General Card Specifications B-4
B.2.1 Power B-5
B.2.2 Temperature B-6
B.3 Common Control Card Specifications B-7
B.3.1 TCC2 Card Specifications B-7
B.3.2 AIC Card Specifications (ANSI only) B-8
B.3.3 AIC-I Card Specifications B-9
B.3.4 MIC-A/P FMEC Specifications (ETSI only) B-10
B.3.5 MIC-C/T/P FMEC Specifications (ETSI only) B-11
B.4 DWDM Card Specifications B-12

B.4.1 OSCM Card Specifications B-12
B.4.2 OSC-CSM Card Specifications B-13
B.4.3 OPT-PRE Amplifier Card Specifications B-13
B.4.4 OPT-BST Amplifier Card Specifications B-14
B.4.5 32MUX-O Card Specifications B-15
B.4.6 32DMX-O Card Specifications B-16
B.4.7 32DMX Card Specifications B-16
B.4.8 4MD-xx.x Card Specifications B-17
B.4.9 AD-1C-xx.x Card Specifications B-19
B.4.10 AD-2C-xx.x Card Specifications B-19
B.4.11 AD-4C-xx.x Card Specifications B-20
B.4.12 AD-1B-xx.x Card Specifications B-22
B.4.13 AD-4B-xx.x Card Specifications B-25
B.4.14 32WSS Card Specifications B-29
B.5 Transponder and Muxponder Card Specifications B-30
B.5.1 TXP_MR_10G Card Specifications B-31
B.5.2 MXP_2.5G_10G Card Specifications B-33
B.5.3 TXP_MR_2.5G and TXPP_MR_2.5G Card Specifications B-35
B.5.4 MXP_MR_2.5G and MXPP_MR_2.5G Card Specifications B-36
B.5.5 MXP_2.5G_10E Card Specifications B-38
B.5.6 TXP_MR_10E Card Specifications B-40
B.6 SFP Specifications B-42
SFP Port Cabling Specifications B-43
C.1 Service States C-1
C.2 Administrative States C-2
C.3 Service State Transitions C-3
C.3.1 DWDM Card Service State Transitions C-3
C.3.2 Optical Payload Port Service State Transitions C-5
C.3.3 OSC Port Service State Transitions C-6
C.3.4 OCHNC Service State Transitions C-6
C.3.5 Transponder/Muxponder Card Service State Transitions C-7
C.3.6 Transponder/Muxponder Port Service State Transitions C-11

INDEX

Figure 1-1 Reversing the Mounting Brackets (23-inch [584.2-mm] Position to 19-inch [482.6-mm] Position) **1-11**
Figure 1-2 Installing the External Brackets **1-12**
Figure 1-3 Mounting an ONS 15454 ETSI in a Rack **1-14**
Figure 1-4 Three-Shelf ONS 15454 ETSI (15454 SDH) Bay Assembly **1-18**
Figure 1-5 Mounting the Air Ramp in a Rack **1-19**
Figure 1-6 Cisco ONS 15454 ANSI Front Door **1-21**
Figure 1-7 Removing the ONS 15454 ETSI Front Door **1-22**
Figure 1-8 Removing the ONS 15454 ANSI Front Door **1-23**
Figure 1-9 Unscrewing the FMEC Cover **1-24**
Figure 1-10 Removing the ONS 15454 FMEC Cover **1-25**
Figure 1-11 Installing FMECs on the ONS 15454 ETSI **1-29**
Figure 1-12 Grounding the ONS 15454 ETSI **1-33**
Figure 1-13 Ground Location on the Backplane **1-34**
Figure 1-14 Cisco ONS 15454 Power Terminals **1-38**
Figure 1-15 Installing the Fan-Tray Assembly on the ONS 15454 ETSI **1-42**
Figure 1-16 Installing the Fan-Tray Assembly on the ONS 15454 ANSI **1-43**
Figure 1-17 Replace Backplane Screws with Standoffs **1-45**
Figure 1-18 Installing Standoffs and the AEP **1-46**
Figure 1-19 AEP Wire-Wrap Connections to Backplane Pins **1-46**
Figure 1-20 Cisco ONS 15454 Backplane Pinouts (Release 3.4 or Later) **1-55**
Figure 1-21 Highlighted Environmental Alarms **1-56**
Figure 1-22 Installing the AEP Cover **1-60**
Figure 1-23 Alarm Input Connector **1-62**
Figure 1-24 Alarm Output Connector **1-63**
Figure 1-25 ONS 15454 ETSI FMEC Cover **1-64**
Figure 1-26 Backplane Attachment for the Rear Cover **1-65**
Figure 1-27 Installing the Rear Cover with Spacers **1-66**
Figure 1-28 ONS 15xxx FlexLayer Shelf Assembly **1-71**
Figure 1-29 Installing Cards in the ONS 15454 ETSI **1-73**
Figure 2-1 Logging into CTC **2-26**
Figure 2-2 Login Node Group **2-30**

Figure 3-1 Selecting the IP Address Option 3-13
Figure 3-2 Changing the IP Address 3-13
Figure 3-3 Selecting the Save Configuration Option 3-14
Figure 3-4 Saving and Rebooting the TCC2/TCC2P 3-14
Figure 3-5 Nodes Behind a Firewall 3-19
Figure 3-6 CTC Computer and ONS 15454s Residing Behind Firewalls 3-20
Figure 3-7 Creating an SNMP Trap 3-23
Figure 3-8 Cisco MetroPlanner Site Dialog Window 3-25
Figure 3-9 Creating a Y-Cable Protection Group 3-34
Figure 3-10 Cisco MetroPlanner Internal Connections Table 3-36
Figure 3-11 Fibering OSC Terminations—Hub Node with OSCM Cards 3-39
Figure 3-12 Fibering a Hub Node 3-42
Figure 3-13 Fibering a Line Amplifier Node 3-45
Figure 3-14 Fibering an OSC Regeneration Node 3-47
Figure 3-15 Fibering an Amplified OADM Node 3-50
Figure 3-16 Fibering a Passive OADM Node 3-52
Figure 3-17 Fibering an ROADM Node 3-54
Figure 3-18 OSC Terminations Pane 3-61
Figure 3-19 Installing the Door Ground Strap Retrofit Kit 3-65
Figure 3-20 Shelf Assembly with Door Ground Strap Retrofit Kit Installed 3-66
Figure 7-1 Selecting CTC Data For Print 7-3
Figure 7-2 Selecting CTC Data For Export 7-4
Figure 7-3 CTC Node View 7-7
Figure 7-4 CTC Preferences Dialog Box 7-10
Figure 7-5 Node View Conditions Window 7-12
Figure 7-6 Select Affected Circuits Option 7-15
Figure 7-7 Viewing Alarm-Affected Circuits 7-16
Figure 7-8 Shelf LCD Panel 7-17
Figure 7-9 Store Profiles Dialog Box 7-21
Figure 7-10 AD-1C Card Alarm Profile 7-25
Figure 7-11 Node View Alarm Profile 7-26
Figure 7-12 Select Node/Profile Combination For Delete Dialog Box 7-28
Figure 7-13 Alarm Filter Dialog Box General Tab 7-31
Figure 7-14 Alarm Filter Dialog Box Conditions Tab 7-31
Figure 7-15 AIC Card External Alarms 7-37

Figure 7-16 Provisioning External Alarms on the AIC-I Card **7-40**
Figure 8-1 OC3 Line Tab in the Optical Service Channel Card View Performance Window **8-9**
Figure 8-2 Optical Line Tab in the Optical Amplifier Card View Performance Window **8-10**
Figure 8-3 Optical Channel Tab in the Multiplexer/Demultiplexer Card View Performance Window **8-12**
Figure 8-4 Optical Line Tab in the Channel Filter OADM Card View Performance Window **8-13**
Figure 8-5 Optical Channel Tab in the Band Filter OADM Card View Performance Window **8-14**
Figure 8-6 OTN Lines Tab for Enabling/Disabling OTN ITU-T G.709 Performance Monitoring **8-16**
Figure 8-7 OTN Lines Tab for Enabling/Disabling OTN FEC Performance Monitoring for TXP_MR_10E Cards **8-17**
Figure 8-8 Viewing Optics Performance Monitoring Information **8-19**
Figure 8-9 Viewing Payload Performance Monitoring Information **8-20**
Figure 8-10 Viewing OTN ITU-T G.709 Performance Monitoring Information **8-21**
Figure 8-11 Viewing OTN FEC Performance Monitoring Information **8-22**
Figure 8-12 Statistics Tab on the Card View Performance Window **8-23**
Figure 8-13 Utilization Tab on the Card View Performance Window **8-24**
Figure 8-14 History Tab on the Card View Performance Window **8-26**
Figure 8-15 SONET PM Tab on the Card View Performance Window **8-27**
Figure 9-1 Equalized ROADM Power Example **9-7**
Figure 11-1 Restoring the Database—Traffic Loss Warning **11-4**
Figure 11-2 Restoring the Database—In-Process Notification **11-4**
Figure 11-3 Reinitialization Tool in Windows **11-7**
Figure 11-4 Confirming NE Restoration **11-7**
Figure 11-5 Reinitialization Tool in UNIX **11-9**
Figure 11-6 Viewing the Audit Trail Records **11-20**
Figure 11-7 ANSI Shelf Fan-Tray Air Filter in an External Filter Bracket (Front Door Removed) **11-30**
Figure 11-8 ETSI Shelf Fan-Tray Air Filter in an External Filter Bracket (Front Door Removed) **11-30**
Figure 11-9 Removing or Replacing the Fan-Tray Assembly (Front Door Removed) (ANSI) **11-38**
Figure 11-10 Removing or Replacing the Fan-Tray Assembly (Front Door Removed) (ETSI) **11-39**
Figure 11-11 Find the MAC Address **11-41**
Figure 11-12 Lower Backplane Cover **11-41**
Figure 11-13 Repairing Circuits **11-43**
Figure 11-14 Recording the Old MAC Address Before Replacing the AIP **11-43**
Figure 11-15 Circuit Repair Information **11-44**
Figure 11-16 Attaching Plastic Lower Backplane Cover **11-45**
Figure 13-1 Cisco ONS 15454 ANSI Dimensions **13-5**
Figure 13-2 Mounting an ONS 15454 ANSI Shelf in a Rack **13-6**

Figure 13-3 ONS 15454 ETSI Dimensions **13-8**
Figure 13-4 Mounting an ONS 15454 ETSI Shelf in a Rack **13-9**
Figure 13-5 Three-Shelf ONS 15454 ETSI Bay Assembly **13-10**
Figure 13-6 Two-Channel Add/Drop FlexLayer Module Block Diagram **13-12**
Figure 13-7 ONS 15454 Two-Channel Optical Add/Drop FlexLayer Module **13-13**
Figure 13-8 Two-Channel Drop Component Connector Mapping and Labeling **13-13**
Figure 13-9 Two-Channel Add Component Connector Mapping and Labeling **13-14**
Figure 13-10 Typical Y-Cable Protection Module Configuration **13-14**
Figure 13-11 1:2 Splitter and 2:1 Coupler (Y-Cable Protection) Module Block Diagram **13-15**
Figure 13-12 ONS 15454 Y-Cable Protection FlexLayer Module (Single Mode) **13-15**
Figure 13-13 ONS 15454 Y-Cable Protection FlexLayer Module (Multimode) **13-16**
Figure 13-14 Y-Cable Protection Component Connector Mapping and Labeling **13-16**
Figure 13-15 Typical DWDM Equipment Layout in an ONS 15454 ANSI Rack **13-18**
Figure 13-16 The ONS 15454 Front Door **13-19**
Figure 13-17 Cisco ONS 15454 ANSI Deep Door **13-20**
Figure 13-18 ONS 15454 ANSI Front Door Ground Strap **13-21**
Figure 13-19 Removing the ONS 15454 ANSI Front Door **13-22**
Figure 13-20 Removing the ONS 15454 ETSI Front Door **13-23**
Figure 13-21 ONS 15454 ANSI Front-Door Erasable Label **13-24**
Figure 13-22 ONS 15454 ETSI Front-Door Erasable Label **13-25**
Figure 13-23 Laser Warning on the ONS 15454 ANSI Front-Door Label **13-25**
Figure 13-24 Laser Warning on the ONS 15454 ETSI Front-Door Label **13-26**
Figure 13-25 Backplane Covers **13-27**
Figure 13-26 Removing the Lower Backplane Cover **13-27**
Figure 13-27 Backplane Attachment for Cover **13-28**
Figure 13-28 Installing the Plastic Rear Cover with Spacers **13-29**
Figure 13-29 AEP Printed Circuit Board Assembly **13-31**
Figure 13-30 AEP Block Diagram **13-31**
Figure 13-31 AEP Wire-Wrap Connections to Backplane Pins **13-32**
Figure 13-32 Alarm Input Circuit Diagram **13-33**
Figure 13-33 Alarm Output Circuit Diagram **13-34**
Figure 13-34 Managing Cables on the Front Panel **13-37**
Figure 13-35 Fiber Capacity **13-38**
Figure 13-36 Patch-Panel Module **13-39**
Figure 13-37 DWDM Fiber Tray **13-40**

Figure 13-38 Tie-Down Bar on the Cisco ONS 15454 ANSI Shelf Assembly **13-41**
Figure 13-39 Position of the ONS 15454 ETSI Fan-Tray Assembly **13-42**
Figure 13-40 Ground Posts on the ONS 15454 ANSI Backplane **13-44**
Figure 13-41 ONS 15454 ANSI Backplane Pinouts (Release 3.4 or Later) **13-46**
Figure 13-42 ONS 15454 ANSI Backplane Pinouts **13-47**
Figure 13-43 Installing Cards in the ONS 15454 ANSI **13-50**
Figure 13-44 Installing Cards in the ONS 15454 ETSI Shelf **13-51**
Figure 14-1 TCC2 Faceplate and Block Diagram **14-12**
Figure 14-2 AIC Faceplate and Block Diagram **14-14**
Figure 14-3 RJ-11 Connector **14-16**
Figure 14-4 AIC-I Faceplate and Block Diagram **14-17**
Figure 14-5 RJ-11 Connector **14-20**
Figure 14-6 MIC-A/P Faceplate and Block Diagram **14-22**
Figure 14-7 MIC-C/T/P Faceplate and Block Diagram **14-25**
Figure 14-8 OSCM Faceplate **14-27**
Figure 14-9 OSCM Block Diagram **14-28**
Figure 14-10 OSCM VOA Optical Module Functional Block Diagram **14-29**
Figure 14-11 OSC-CSM Faceplate **14-31**
Figure 14-12 OSC-CSM Block Diagram **14-32**
Figure 14-13 OSC-CSM Optical Module Functional Block Diagram **14-33**
Figure 14-14 OPT-PRE Faceplate **14-36**
Figure 14-15 OPT-PRE Block Diagram **14-37**
Figure 14-16 OPT-PRE Optical Module Functional Block Diagram **14-37**
Figure 14-17 OPT-BST Faceplate **14-40**
Figure 14-18 OPT-BST Block Diagram **14-41**
Figure 14-19 OPT-BST Optical Module Functional Block Diagram **14-41**
Figure 14-20 32MUX-O Faceplate **14-46**
Figure 14-21 32MUX-O Block Diagram **14-47**
Figure 14-22 32MUX-O Optical Module Functional Block Diagram **14-47**
Figure 14-23 32DMX-O Faceplate **14-50**
Figure 14-24 32DMX-O Block Diagram **14-51**
Figure 14-25 32DMX-O Optical Module Functional Block Diagram **14-51**
Figure 14-26 32DMX Faceplate and Ports **14-54**
Figure 14-27 32DMX Block Diagram **14-55**
Figure 14-28 32DMX Optical Module Functional Block Diagram **14-55**

Figure 14-29 4MD-xx.x Faceplate **14-58**
Figure 14-30 4MD-xx.x Block Diagram **14-59**
Figure 14-31 4MD-xx.x Optical Module Functional Block Diagram **14-60**
Figure 14-32 AD-1C-xx.x Faceplate **14-63**
Figure 14-33 AD-1C-xx.x Block Diagram **14-64**
Figure 14-34 AD-1C-xx.x Optical Module Functional Block Diagram **14-64**
Figure 14-35 AD-2C-xx.x Faceplate **14-67**
Figure 14-36 AD-2C-xx.x Block Diagram **14-68**
Figure 14-37 AD-2C-xx.x Optical Module Functional Block Diagram **14-68**
Figure 14-38 AD-4C-xx.x Faceplate **14-71**
Figure 14-39 AD-4C-xx.x Block Diagram **14-72**
Figure 14-40 AD-4C-xx.x Optical Module Functional Block Diagram **14-72**
Figure 14-41 AD-1B-xx.x Faceplate **14-75**
Figure 14-42 AD-1B-xx.x Block Diagram **14-76**
Figure 14-43 AD-1B-xx.x Optical Module Functional Block Diagram **14-76**
Figure 14-44 AD-4B-xx.x Faceplate **14-79**
Figure 14-45 AD-4B-xx.x Block Diagram **14-80**
Figure 14-46 AD-4B-xx.x Optical Module Functional Block Diagram **14-80**
Figure 14-47 32WSS Faceplate and Ports **14-83**
Figure 14-48 32WSS Block Diagram **14-84**
Figure 14-49 32WSS Optical Block Diagram **14-85**
Figure 14-50 TXP_MR_10G Faceplate and Block Diagram **14-88**
Figure 14-51 TXP_MR_10E Faceplate and Block Diagram **14-91**
Figure 14-52 TXP_MR_2.5G and TXPP_MR_2.5G Faceplates **14-97**
Figure 14-53 TXP_MR_2.5G and TXPP_MR_2.5G Block Diagram **14-98**
Figure 14-54 Laser Radiation Warning—Hazard Level Label **14-99**
Figure 14-55 Laser Radiation Warning—Laser Source Connector Label **14-99**
Figure 14-56 FDA Compliance Statement Label **14-99**
Figure 14-57 Electrical Energy Hazard Label **14-100**
Figure 14-58 MXP_2.5G_10G Faceplate **14-102**
Figure 14-59 MXP_2.5G_10G Block Diagram **14-103**
Figure 14-60 MXP_2.5G_10E Faceplate and Ports **14-107**
Figure 14-61 MXP_2.5G_10E Block Diagram **14-108**
Figure 14-62 MXP_MR_2.5G and MXPP_MR_2.5G Faceplates **14-115**
Figure 14-63 MXP_MR_2.5G and MXPP_MR_2.5G Block Diagram **14-116**

Figure 14-64 Laser Radiation Warning—Hazard Level Label **14-117**
Figure 14-65 Laser Radiation Warning—Laser Source Connector Label **14-117**
Figure 14-66 FDA Compliance Statement Label **14-118**
Figure 14-67 Electrical Energy Hazard Label **14-118**
Figure 14-68 Y-Cable Protection **14-120**
Figure 14-69 Splitter Protection **14-121**
Figure 14-70 Mylar Tab SFP **14-124**
Figure 14-71 Actuator/Button SFP **14-124**
Figure 14-72 Bail Clasp SFP **14-124**
Figure 15-1 Hub Node Configuration Example **15-2**
Figure 15-2 Hub Node Channel Flow Example **15-3**
Figure 15-3 Terminal Node Configuration Example **15-4**
Figure 15-4 Amplified OADM Node Configuration Example **15-5**
Figure 15-5 Amplified OADM Node Channel Flow Example **15-6**
Figure 15-6 Passive OADM Node Configuration Example **15-7**
Figure 15-7 Passive OADM Node Channel Flow Example **15-7**
Figure 15-8 ROADM Node with BST-PRE, OPT-BST, and 32DMX Cards Installed **15-8**
Figure 15-9 ROADM Node with BST-PRE, OPT-BST, and 32DMX-O Cards Installed **15-9**
Figure 15-10 ROADM East to West Optical Signal Flow Example **15-10**
Figure 15-11 Anti-ASE Node Channel Flow Example **15-11**
Figure 15-12 Line Amplifier Node Configuration Example **15-12**
Figure 15-13 OSC Regeneration Line Node Configuration Example **15-13**
Figure 15-14 OSC Regeneration Line Site Example **15-13**
Figure 15-15 Automatic Power Control **15-17**
Figure 15-16 Power Monitoring Subtab **15-18**
Figure 15-17 Span Loss Verification **15-19**
Figure 15-18 WDM-ANS Provisioning **15-24**
Figure 16-1 Hubbed Ring **16-2**
Figure 16-2 Multihubbed Ring **16-3**
Figure 16-3 Any-to-Any Ring **16-4**
Figure 16-4 Meshed Ring **16-5**
Figure 16-5 Linear Configuration with an OADM Node **16-5**
Figure 16-6 Linear Configuration without an OADM Node **16-6**
Figure 16-7 Single-Span Link **16-6**
Figure 16-8 Nodes Using OPT-BST/OPT-BST-E Cards **16-19**

Figure 16-9 Nodes Using OSC-CSM Cards **16-21**
Figure 17-1 CTC Software Versions, Node View **17-2**
Figure 17-2 CTC Software Versions, Network View **17-3**
Figure 17-3 Node View (Default Login View) **17-7**
Figure 17-4 Terminal Loopback Indicator **17-9**
Figure 17-5 Facility Loopback Indicator **17-10**
Figure 17-6 Network in CTC Network View **17-11**
Figure 17-7 CTC Card View Showing a 32DMX-O Card **17-13**
Figure 18-1 ONS 15454 Timing Example **18-8**
Figure 19-1 Scenario 1: CTC and ONS 15454s on Same Subnet (ANSI and ETSI) **19-3**
Figure 19-2 Scenario 2: CTC and ONS 15454s Connected to Router (ANSI and ETSI) **19-4**
Figure 19-3 Scenario 3: Using Proxy ARP (ANS and ETSII **19-5**
Figure 19-4 Scenario 3: Using Proxy ARP with Static Routing (ANSI and ETSI) **19-6**
Figure 19-5 Scenario 4: Default Gateway on a CTC Computer (ANSI and ETSI) **19-7**
Figure 19-6 Scenario 5: Static Route With One CTC Computer Used as a Destination (ANSI and ETSI) **19-8**
Figure 19-7 Scenario 5: Static Route With Multiple LAN Destinations (ANSI and ETSI) **19-9**
Figure 19-8 Scenario 6: OSPF Enabled (ANSI and ETSI) **19-10**
Figure 19-9 Scenario 6: OSPF Not Enabled (ANSI and ETSI) **19-11**
Figure 19-10 Proxy Server Gateway Settings (ANSI only) **19-13**
Figure 19-11 Proxy Server Gateway Settings (ETSI only) **19-13**
Figure 19-12 ONS 15454 Proxy Server with GNE and ENEs on the Same Subnet (ANSI and ETSI) **19-14**
Figure 19-13 Scenario 7: ONS 15454 Proxy Server with GNE and ENEs on Different Subnets (ANSI and ETSI) **19-15**
Figure 19-14 Scenario 7: ONS 15454 Proxy Server With ENEs on Multiple Rings (ANSI and ETSI) **19-16**
Figure 19-15 Scenario 8: Dual GNEs on the Same Subnet (ANSI and ETSI) **19-18**
Figure 19-16 Scenario 8: Dual GNEs on Different Subnets (ANSI and ETSI) **19-19**
Figure 19-17 Proxy and Firewall Tunnels for Foreign Terminations **19-25**
Figure 19-18 Foreign Node Connection to an ENE Ethernet Port **19-26**
Figure 20-1 Shelf LCD Panel **20-2**
Figure 20-2 Select Affected Circuits Option **20-4**
Figure 20-3 Viewing Alarm-Affected Circuits **20-4**
Figure 20-4 Network View Alarm Profiles Window **20-9**
Figure 20-5 Card View of an E1000-2-G Card Alarm Profile **20-12**
Figure 20-6 External Alarms and Controls Using a Virtual Wire **20-15**

Table 1-1 Pin Connection of the Power FMECs **1-36**
Table 1-2 Pin Assignments for the AEP **1-47**
Table 1-3 Alarm Pin Assignments **1-49**
Table 1-4 MIC-C/T/P Clock Connector Pin Assignment **1-51**
Table 1-5 LAN Pin Assignments **1-52**
Table 1-6 External Timing Pin Assignments for BITS **1-56**
Table 1-7 LAN Pin Assignments for the ONS 15454 ANSI Shelf **1-58**
Table 1-8 Craft Interface Pin Assignments **1-59**
Table 1-9 Alarm Input Pin Assignments **1-60**
Table 1-10 Alarm Output Pin Assignments **1-61**
Table 1-11 ONS 15xxx FlexLayer Hardware Part Numbers **1-70**
Table 1-12 ONS 15454 ETSI Shelf Installation Task Summary **1-77**
Table 1-13 ONS 15454 ANSI Shelf Installation Task Summary **1-78**
Table 2-1 CTC Computer Setup for Local Craft Connections to the ONS 15454 **2-9**
Table 3-1 LED Behavior During TCC2 Reboot **3-12**
Table 3-2 Ports Used by the TCC2 Cards **3-21**
Table 3-3 Protection Types **3-33**
Table 6-1 Circuit Protection Types **6-5**
Table 6-2 Cisco ONS 15454 Circuit Status **6-5**
Table 6-3 OCHNC Channels **6-9**
Table 7-1 Alarm Column Descriptions **7-7**
Table 7-2 Color Codes for Alarms and Condition Severities **7-8**
Table 8-1 MXP_MR_2.5G/MXPP_MR_2.5G Threshold Variables (MIBs) **8-28**
Table 9-1 HTML Commands for the Legal Disclaimer **9-10**
Table 9-2 Managing Domains **9-18**
Table 10-1 OSCM and OSC-CSM Card OC-3 Optical Line Settings **10-3**
Table 10-2 OSCM and OSC-CSM Cards Optical Line Threshold Settings **10-5**
Table 10-3 OSCM and OSC-CSM Card Optical Line Parameter Settings **10-6**
Table 10-4 OSCM and OSC-CSM Cards Optical Channel Thresholds Settings **10-8**
Table 10-5 OSC-CSM, OSCM, or OPT-BST Amplifier Maintenance Settings **10-9**
Table 10-6 OPT-PRE and OPT-BST Amplifier Optical Line Settings **10-11**

Table 10-7 OPT-PRE and OPT-BST Amplifiers Optical Line Thresholds Settings **10-12**
Table 10-8 OPT-PRE and OPT-BST Optical Amplifier Line Settings **10-13**
Table 10-9 OPT-PRE and OPT-BST Amplifier Optical Channel Threshold Settings **10-15**
Table 10-10 Multiplexer and Demultiplexer Card Optical Line Settings **10-17**
Table 10-11 Multiplexer and Demultiplexer Card Optical Line Thresholds Settings **10-18**
Table 10-12 Multiplexer and Demultiplexer Card Optical Channel Settings **10-19**
Table 10-13 Multiplexer and Demultiplexer Cards Optical Channel Threshold Settings **10-21**
Table 10-14 32WSS Optical Channel Parameter Settings **10-23**
Table 10-15 32WSS Card Optical Channel Optics Threshold Settings **10-25**
Table 10-16 32WSS Optical Line Parameter Settings **10-26**
Table 10-17 32WSS Card Optical Line Optics Threshold Settings **10-28**
Table 10-18 PPM Port Types **10-30**
Table 10-19 TXP_MR_10G and TXP_MR_10E Transponder Card Settings **10-33**
Table 10-20 TXP_MR_10G and TXP_MR_10E Transponder Card Line Settings **10-35**
Table 10-21 TXP_MR_10G Transponder Card Section Trace Settings **10-37**
Table 10-22 TXP_MR_10G and TXP_MR_10E Transponder Card Line Threshold Settings **10-38**
Table 10-23 TXP_MR_10G and TXP_MR_10E Transponder Card Optical Thresholds Settings **10-39**
Table 10-24 TXP_MR_10G and TXP_MR_10E Transponder Card OTN Settings **10-40**
Table 10-25 TXP_MR_10G and TXP_MR_10E Transponder Card ITU-T G.709 Threshold Settings **10-41**
Table 10-26 TXP_MR_10G and TXP_MR_10E Transponder Card FEC Threshold Settings **10-42**
Table 10-27 TXP_MR_10G and TXP_MR_10E Transponder Card Trail Trace Identifier Settings **10-42**
Table 10-28 MXP_2.5G_10G or MXP_2.5G_10E Muxponder Card Settings **10-44**
Table 10-29 MXP_2.5G_10G or MXP_2.5G_10E Muxponder Card Line Settings **10-45**
Table 10-30 TXP_MR_10G and MXP_MR_10E Muxponder Card Section Trace Settings **10-47**
Table 10-31 TXP_MR_10G and MXP_MR_10E Muxponder Card Trunk Settings **10-48**
Table 10-32 MXP_2.5G_10G or MXP_2.5G_10E Muxponder Card Line Threshold Settings **10-50**
Table 10-33 MXP_2.5G_10G or MXP_2.5G_10E Muxponder Card Optical Threshold Settings **10-51**
Table 10-34 MXP_2.5G_10G or MXP_2.5G_10E Muxponder Card Line OTN Settings **10-52**
Table 10-35 MXP_2.5G_10G or MXP_2.5G_10E Muxponder Card G.709 Threshold Settings **10-53**
Table 10-36 MXP_2.5G_10G or MXP_2.5G_10E Muxponder Card FEC Threshold Settings **10-54**
Table 10-37 MXP_2.5G_10G or MXP_2.5G_10E Muxponder Card Trail Trace Identifier Settings **10-54**
Table 10-38 TXP_MR_2.5G and TXPP_MR_2.5G Transponder Card Settings **10-56**
Table 10-39 TXP_MR_2.5G and TXPP_MR_2.5G Transponder Card Line Settings **10-57**
Table 10-40 TXP_MR_2.5G and TXPP_MR_2.5G Transponder Card Section Trace Settings **10-59**
Table 10-41 TXP_MR_2.5G and TXPP_MR_2.5G Transponder Card Line Thresholds Settings for OC-3/STM-1, OC-12/STM-4, and OC-48/STM-16 Payloads **10-60**

Table 10-42 TXP_MR_2.5G and TXPP_MR_2.5G Transponder Card Line Thresholds Settings for 1G Ethernet, 1G, and Fiber Channel/FICON Payloads **10-60**
Table 10-43 TXP_MR_2.5G and TXPP_MR_2.5G Transponder Card Optics Thresholds Settings **10-62**
Table 10-44 TXP_MR_2.5G and TXPP_MR_2.5G Transponder Card OTN Line Settings **10-63**
Table 10-45 TXP_MR_2.5G and TXPP_MR_2.5G Transponder Card ITU-T G.709 Threshold Settings **10-63**
Table 10-46 TXP_MR_2.5G and TXPP_MR_2.5G Transponder Card FEC Threshold Settings **10-64**
Table 10-47 TXP_MR_2.5G and TXPP_MR_2.5G Transponder Card Trail Trace Identifier Settings **10-64**
Table 10-48 MXP_MR_2.5G and MXPP_MR_2.5G Muxponder Card Settings **10-66**
Table 10-49 MXP_MR_2.5G and MXPP_MR_2.5G Muxponder Card Line Client Tab Settings **10-67**
Table 10-50 MXP_MR_2.5G and MXPP_MR_2.5G Muxponder Card Line Distance Extension Settings **10-69**
Table 10-51 MXP_MR_2.5G and MXPP_MR_2.5G Muxponder Card Line OC48 Tab Settings **10-71**
Table 10-52 MXP_MR_2.5G and MXPP_MR_2.5G Muxponder Card Line Section Trace Tab Settings **10-73**
Table 10-53 MXP_MR_2.5G and MXPP_MR_2.5G Muxponder Card Line Threshold Settings **10-74**
Table 10-54 MXP_MR_2.5G and MXPP_MR_2.5G Muxponder Card Optical Threshold Settings **10-76**
Table 11-1 Audit Trail Column Definitions **11-20**
Table 11-2 ONS 15454 Timing Report **11-26**
Table 11-3 Incompatibility Alarms for ONS 15454 ANSI **11-35**
Table 11-4 Incompatibility Alarms for ONS 15454 ETSI **11-36**
Table 13-1 ONS 15454 R4.7 100-GHz Channel Plan **13-11**
Table 13-2 Pin Assignments for the AEP **13-32**
Table 13-3 Alarm Input Pin Association **13-33**
Table 13-4 Pin Association for Alarm Output Pins **13-34**
Table 13-5 ANSI Fiber Channel Capacity (One Side of the Shelf) **13-38**
Table 13-6 ETSI Fiber Channel Capacity (One Side of the Shelf) **13-38**
Table 13-7 Fiber Tray Capacity **13-40**
Table 13-8 Fan Tray Assembly Power Requirements **13-43**
Table 13-9 BITS External Timing Pin Assignments **13-48**
Table 13-10 LAN Pin Assignments **13-49**
Table 13-11 Craft Interface Pin Assignments **13-49**
Table 13-12 Slot and Card Symbols **13-51**
Table 14-1 DWDM and Client Cards for the ONS 15454 **14-3**
Table 14-2 DWDM and Client Card CTC Software Release Compatibility **14-6**
Table 14-3 ONS 15454 Card Interfaces Assigned to Input Power Classes **14-7**
Table 14-4 10-Gbps Interface Optical Performances **14-7**
Table 14-5 2.5-Gbps Interface Optical Performances (Part 1) **14-8**
Table 14-6 2.5-Gbps Interface Optical Performances (Part 2) **14-9**

Table 14-7 DWDM Channel Allocation Plan **14-10**
Table 14-8 TCC2 Card-Level Indicators **14-13**
Table 14-9 TCC2 Network-Level Indicators **14-13**
Table 14-10 Orderwire Pin Assignments **14-16**
Table 14-11 AIC-I Card-Level Indicators **14-18**
Table 14-12 Orderwire Pin Assignments **14-20**
Table 14-13 UDC Pin Assignments **14-21**
Table 14-14 DCC Pin Assignments **14-21**
Table 14-15 Alarm Interface Pinouts on the MIC-A/P DB-62 Connector **14-22**
Table 14-16 OSCM VOA Port Calibration **14-29**
Table 14-17 OSCM Card-Level Indicators **14-29**
Table 14-18 OSC-CSM Port Calibration **14-34**
Table 14-19 OSC-CSM Card-Level Indicators **14-35**
Table 14-20 OPT-PRE Port Calibration **14-38**
Table 14-21 OPT-PRE Amplifier Card-Level Indicators **14-38**
Table 14-22 OPT-BST Port Calibration **14-42**
Table 14-23 OPT-BST Card-Level Indicators **14-42**
Table 14-24 32MUX_O Channel Plan **14-44**
Table 14-25 32MUX-O Port Calibration **14-48**
Table 14-26 32MUX-O Card-Level Indicators **14-48**
Table 14-27 32DMX-O Port Calibration **14-52**
Table 14-28 32DMX-O Card-Level Indicators **14-52**
Table 14-29 32DMX Port Calibration **14-56**
Table 14-30 32DMX Card-Level Indicators **14-56**
Table 14-31 4MD-xx.x Channel Sets **14-57**
Table 14-32 4MD-xx.x Port Calibration **14-60**
Table 14-33 4MD-xx.x Card-Level Indicators **14-61**
Table 14-34 AD-1C-xx.x Port Calibration **14-65**
Table 14-35 AD-1C-xx.x Card-Level Indicators **14-65**
Table 14-36 AD-2C-xx.x Channel Pairs **14-66**
Table 14-37 AD-2C-xx.x Port Calibration **14-69**
Table 14-38 AD-2C-xx.x Card-Level Indicators **14-69**
Table 14-39 AD-4C-xx.x Channel Sets **14-70**
Table 14-40 AD-4C-xx.x Port Calibration **14-73**
Table 14-41 AD-4C-xx.x Card-Level Indicators **14-73**

Table 14-42 AD-1B-xx.x Port Calibration **14-77**
Table 14-43 AD-1B-xx.x Card-Level Indicators **14-77**
Table 14-44 AD-4B-xx.x Port Calibration **14-81**
Table 14-45 AD-4B-xx.x Card-Level Indicators **14-81**
Table 14-46 32WSS Port Calibration **14-86**
Table 14-47 32WSS Card-Level Indicators **14-86**
Table 14-48 TXP_MR_10G Card-Level Indicators **14-89**
Table 14-49 TXP_MR_10G Port-Level Indicators **14-89**
Table 14-50 TXP_MR_10E Card-Level Indicators **14-93**
Table 14-51 TXP_MR_10E Port-Level Indicators **14-94**
Table 14-52 2R and 3R Mode and ITU-T G.709 Compliance by Client Interface **14-95**
Table 14-53 Trunk Bit Rates With ITU-T G.709 Enabled **14-95**
Table 14-54 TXP_MR_10G and TXPP_MR_2.5G Card-Level Indicators **14-100**
Table 14-55 TXP_MR_10G Port-Level Indicators **14-100**
Table 14-56 MXP_2.5G_10G Card-Level Indicators **14-104**
Table 14-57 MXP_2.5G_10G Port-Level Indicators **14-104**
Table 14-58 MXP_2.5G_10E Trunk Wavelengths **14-110**
Table 14-59 MXP_2.5G_10E Card-Level Indicators **14-112**
Table 14-60 MXP_2.5G_10E Port-Level Indicators **14-112**
Table 14-61 Card Versions **14-113**
Table 14-62 MXP_MR_2.5G and MXP_MR_2.5G Client Interface Data Rates and Encapsulation **14-114**
Table 14-63 Client Data Rates and Ports **14-114**
Table 14-64 MXP_MR_10G and MXPP_MR_2.5G Card-Level Indicators **14-118**
Table 14-65 MXP_MR_10G and MXPP_MR_2.5G Port-Level Indicators **14-119**
Table 14-66 DWDM Transponder and Muxponder Termination Modes **14-122**
Table 14-67 SFP Card Compatibility **14-123**
Table 15-1 APC-Managed Parameters **15-17**
Table 15-2 ANS Parameters **15-22**
Table 15-3 ANS-WDM > Provisioning Subtab Parameters **15-24**
Table 15-4 ANS Parameters By Node Type **15-26**
Table 15-5 ANS Parameters Summary **15-29**
Table 16-1 Supported Topologies, and Node Types **16-7**
Table 16-2 ONS 15454 Client Card Classes **16-7**
Table 16-3 Span Loss for 32-Channel Ring and Linear Networks with OADM Nodes Using SMF Fiber **16-8**
Table 16-4 Span Loss for 16-Channel Ring and Linear Networks with OADM Nodes Using SMF Fiber **16-9**

Table 16-5 Span Loss for 32-Channel Ring and Linear Networks with OADM Nodes Using TW-RS Fiber **16-9**
Table 16-6 Span Loss for 32-Channel Ring and Linear Networks with OADM Nodes Using E-LEAF Fiber **16-10**
Table 16-7 Span Loss for 32-Channel Linear Networks without OADM Nodes Using SMF Fiber **16-10**
Table 16-8 Span Loss for 32-Channel Linear Networks without OADM Nodes Using TW-RS Fiber **16-11**
Table 16-9 Span Loss for 32-Channel Linear Networks without OADM Nodes Using E-LEAF Fiber **16-12**
Table 16-10 Span Loss for 16-Channel Linear Networks without OADM Nodes Using SMF Fiber **16-12**
Table 16-11 Span Loss for 8-Channel Linear Networks without OADM Nodes Using SMF Fiber **16-13**
Table 16-12 Span Loss for 32-Channel Linear or Ring Networks with all ROADM Nodes Using SMF Fiber **16-13**
Table 16-13 Span Loss for 32-Channel Ring and Linear Networks with ROADM and OADM Nodes Using SMF Fiber **16-14**
Table 16-14 Pass/Fail Criteria for 32-Channel, 8-Node ROADM Rings Using SMF Fiber **16-15**
Table 16-15 Pass/Fail Criteria for 32-Channel, 16-Node ROADM Rings Using SMF Fiber **16-16**
Table 16-16 Span Loss for Single-Span Link with Eight Channels **16-17**
Table 16-17 Span Loss for Single-Span Link with 16 Channels **16-17**
Table 16-18 Span Loss for Single-Span Link with AD-1C-xx.x Cards, OPT-PRE Amplifiers, and OPT-BST/OPT-BST-E Amplifiers **16-17**
Table 16-19 Span Loss for Single-Span Link with One Channel and OPT-BST/OPT-BST-E Amplifiers **16-18**
Table 16-20 Span Loss for Single-Span Link with One Channel, OPT-BST/OPT-BST-E Amplifiers, OPT-PRE Amplifiers, and ONS 15216 FlexLayer Filters **16-18**
Table 17-1 JRE Compatibility **17-4**
Table 17-2 Computer Requirements for CTC **17-5**
Table 17-3 ONS 15454 Connection Methods **17-6**
Table 17-4 Node View Card Colors **17-7**
Table 17-5 Node View FMEC Color **17-8**
Table 17-6 Node View Card Statuses **17-8**
Table 17-7 Node View Card Port Colors and Service States **17-9**
Table 17-8 Node View Tabs and Subtabs **17-10**
Table 17-9 DCC Colors Indicating State in Network View **17-11**
Table 17-10 Node Status Shown in Network View **17-12**
Table 17-11 Network View Tabs and Subtabs **17-12**
Table 17-12 Card View Tabs and Subtabs **17-13**
Table 18-1 ONS 15454 Security Levels—Node View **18-2**
Table 18-2 ONS 15454 Security Levels—Network View **18-4**
Table 18-3 ONS 15454 Default User Idle Times **18-5**
Table 18-4 Audit Trail Window Columns **18-6**
Table 18-5 SSM Generation 1 Message Set **18-8**
Table 18-6 SSM Generation 2 Message Set **18-9**

Table 19-1 General ONS 15454 IP Troubleshooting Checklist **19-2**
Table 19-2 ONS 15454 Gateway and End NE Settings **19-14**
Table 19-3 Proxy Server Firewall Filtering Rules **19-16**
Table 19-4 Proxy Server Firewall Filtering Rules When Packet Addressed to ONS 15454 **19-17**
Table 19-5 Cisco ONS 15454 Client/Trunk Card Combinations for Provisionable Patchcords **19-20**
Table 19-6 Cisco ONS 15454 Client/Client Card Combinations for Provisionable Patchcords **19-20**
Table 19-7 Cisco ONS 15454 Trunk/Trunk Card Combinations for Provisionable Patchcords **19-20**
Table 19-8 Sample Routing Table Entries **19-21**
Table 19-9 Ports Used by the TCC2 **19-23**
Table 20-1 Alarm Display **20-3**
Table 20-2 Conditions Display **20-5**
Table 20-3 Conditions Column Description **20-6**
Table 20-4 History Column Description **20-7**
Table 20-5 Alarm Profile Buttons **20-11**
Table 20-6 Alarm Profile Editing Options **20-11**
Table A-1 Change CTC Views **A-2**
Table A-2 Description of Node Icons on Network View Map **A-3**
Table A-3 CTC Menu and Toolbar Options **A-5**
Table A-4 CTC Window Mouse Shortcuts **A-9**
Table A-5 Node View Card-Related Shortcuts **A-10**
Table A-6 Network Management Tasks in Network View **A-10**
Table A-7 Table Display Options **A-11**
Table B-1 Individual Card Power Requirements **B-5**
Table B-2 Card Temperature Ranges and Product Names **B-6**
Table B-3 32 MUX-O Optical Specifications **B-15**
Table B-4 32 DMX-O Optical Specifications **B-16**
Table B-5 32 DMX Optical Specifications **B-17**
Table B-6 32 MUX-O Optical Specifications **B-18**
Table B-7 AD-1C-xx.x Card Optical Specifications **B-19**
Table B-8 AD-2C-xx.x Card Optical Specifications **B-20**
Table B-9 AD-4C-xx.x Optical Specifications **B-21**
Table B-10 AD-1B-xx.x Channel Allocation Plan by Band **B-22**
Table B-11 AD-1B-xx.x Optical Specifications **B-24**
Table B-12 AD-1B-xx.x Transmit and Receive Dropped Band Wavelength Ranges **B-24**
Table B-13 AD-4B-xx.x Channel Allocation Plan by Band **B-26**

Table B-14 AD-4B-xx.x Optical Specifications **B-28**
Table B-15 AD-4B-xx.x Transmit and Receive Dropped Band Wavelength Ranges **B-28**
Table B-16 32WSS Optical Specifications **B-29**
Table B-17 SFP Specifications **B-42**
Table B-18 Single-Mode Fiber SFP Port Cabling Specifications **B-43**
Table B-19 Multimode Fiber SFP Port Cabling Specifications **B-44**
Table C-1 ONS 15454 Service State Primary States and Primary State Qualifiers **C-1**
Table C-2 ONS 15454 Secondary States **C-2**
Table C-3 Cisco ONS 15454 Administrative States **C-2**
Table C-4 Cisco ONS 15454 Optical Unit Service State Transitions **C-3**
Table C-5 Cisco ONS 15454 Optical Payload Port Service State Transitions **C-5**
Table C-6 Cisco ONS 15454 OSC Port Service State Transitions **C-6**
Table C-7 Cisco ONS 15454 OCHNC Service State Transitions **C-6**
Table C-8 ONS 15454 Transponder/Muxponder Card Service State Transitions **C-7**
Table C-9 ONS 15454 Transponder/Muxponder Port Service State Transitions **C-11**

NTP-G1 Unpack and Inspect the Shelf Assembly **1-6**
NTP-G2 Install the Shelf Assembly **1-8**
NTP-G3 Open and Remove the Front Door **1-20**
NTP-G4 Open and Remove the FMEC Cover (ETSI Only) **1-23**
NTP-G5 Remove the Backplane Covers (ANSI Only) **1-26**
NTP-G6 Install the MIC-A/P and MIC-T/C/P FMECs (ETSI Only) **1-27**
NTP-G7 Install the Power and Ground **1-30**
NTP-G8 Install the Fan-Tray Assembly **1-40**
NTP-G9 Install the Alarm Expansion Panel (ANSI Only) **1-44**
NTP-G10 Attach Wires to Alarm, Timing, LAN, and Craft Pin Connections **1-47**
NTP-G11 Install an External Wire-Wrap Panel on the AEP (ANSI Only) **1-59**
NTP-G12 Install and Close the FMEC Cover (ETSI Only) **1-63**
NTP-G13 Install the Rear Cover (ANSI Only) **1-65**
NTP-G14 Install DWDM Equipment **1-66**
NTP-G15 Install the Common Control Cards **1-72**
NTP-G16 Perform the Shelf Installation Acceptance Test **1-77**
NTP-G17 Set Up Computer for CTC **2-2**
NTP-G18 Set Up CTC Computer for Local Craft Connection to the ONS 15454 **2-9**
NTP-G19 Set Up a CTC Computer for a Corporate LAN Connection to the ONS 15454 **2-20**
NTP-G20 Set Up a Remote Access Connection to the ONS 15454 **2-22**
NTP-G21 Log into the ONS 15454 GUI **2-23**
NTP-G22 Verify Common Card Installation **3-2**
NTP-G23 Create Users and Assign Security **3-3**
NTP-G24 Set Up Name, Date, Time, and Contact Information **3-6**
NTP-G25 Set Power Monitor Thresholds **3-8**
NTP-G26 Set Up CTC Network Access **3-8**
NTP-G27 Set Up the ONS 15454 for Firewall Access **3-19**
NTP-G28 Set Up SNMP **3-22**
NTP-G29 Preprovision a Slot **3-24**
NTP-G30 Install the DWDM Cards **3-26**
NTP-G31 Install the DWDM Dispersion Compensating Units **3-28**

NTP-G32 Install the Transponder and Muxponder Cards **3-30**
NTP-G33 Create a Y-Cable Protection Group **3-33**
NTP-G34 Install Fiber-Optic Cables on DWDM Cards **3-35**
NTP-G35 Route Fiber-Optic Cables **3-55**
NTP-G36 Calculate Cable Connections **3-56**
NTP-G37 Run Automatic Node Setup **3-58**
NTP-G38 Provision Terminations and Ring ID **3-60**
NTP-G39 Verify OSCM and OSC-CSM Transmit Power **3-63**
NTP-G40 Replace the Front Door **3-64**
NTP-G41 Perform the Terminal and Hub Node with 32MUX-O and 32DMX-O Cards Acceptance Test **4-2**
NTP-G42 Perform the Terminal Node with 32WSS and 32DMX Cards Acceptance Test **4-4**
NTP-G43 Perform the ROADM Node Acceptance Test **4-6**
NTP-G44 Perform the Anti-ASE Hub Node Acceptance Test **4-8**
NTP-G45 Perform the Symmetric Line Node with OSCM Cards Acceptance Test **4-10**
NTP-G46 Perform the Symmetric Line Node with OSC-CSM Cards Acceptance Test **4-12**
NTP-G47 Perform the Asymmetric Line Node with OSC-CSM and OSCM Cards Acceptance Test **4-13**
NTP-G48 Perform the Symmetric OADM Node with OSCM Cards Acceptance Test **4-16**
NTP-G49 Perform the Symmetric OADM Node with OSC-CSM Cards Acceptance Test **4-18**
NTP-G50 Perform the Symmetric Passive OADM Node with OSC-CSM Cards Acceptance Test **4-20**
NTP-G51 Verify DWDM Node Turn Up **5-2**
NTP-G52 Verify Node-to-Node Connections **5-3**
NTP-G53 Set Up Timing **5-4**
NTP-G54 Provision and Verify a DWDM Network **5-7**
NTP-G55 Verify the Optical Receive Power **5-13**
NTP-G56 Verify the OSNR **5-14**
NTP-G57 Create a Logical Network Map **5-15**
NTP-G58 Locate and View Optical Channel Network Connections **6-2**
NTP-G59 Create and Delete Optical Channel Network Connections **6-8**
NTP-G60 Create Overhead Circuits **6-12**
NTP-G61 Modify and Delete Overhead Circuits **6-17**
NTP-G62 Create a J0 Section Trace **6-18**
NTP-G63 Document Existing Provisioning **7-2**
NTP-G64 View Alarms, History, Events, and Conditions **7-5**
NTP-G65 Delete Cleared Alarms from Display **7-13**
NTP-G66 View Alarm-Affected Circuits **7-14**

NTP-G67 View Alarm Counts on the LCD for a Node, Slot, or Port **7-16**
NTP-G68 Create, Download, and Assign Alarm Severity Profiles **7-17**
NTP-G69 Enable, Modify, or Disable Alarm Severity Filtering **7-29**
NTP-G70 Suppress Alarms or Discontinue Alarm Suppression **7-33**
NTP-G71 Provision External Alarms and Controls on the Alarm Interface Controller Card **7-36**
NTP-G72 Provision External Alarms and Controls on the Alarm Interface Controller-International **7-38**
NTP-G73 Change the PM Display **8-2**
NTP-G74 Monitor DWDM Card Performance **8-8**
NTP-G75 Monitor Transponder and Muxponder Performance **8-15**
NTP-G76 Verify Span Loss **9-2**
NTP-G77 Manage Automatic Power Control **9-4**
NTP-G78 View ROADM Node Power Equalization **9-6**
NTP-G79 Modify Automatic Node Setup Parameters **9-7**
NTP-G80 Change Node Management Information **9-8**
NTP-G81 Change CTC Network Access **9-10**
NTP-G82 Customize the CTC Network View **9-15**
NTP-G83 Modify or Delete Card Protection Settings **9-20**
NTP-G84 Initiate and Clear Y-Cable and Splitter External Switching Commands **9-23**
NTP-G85 Modify or Delete Communications Channel Terminations and Provisionable Patchcords **9-28**
NTP-G86 Convert a Pass-Through Connection to an Add/Drop Connection **9-31**
NTP-G87 Change Node Timing Parameters **9-32**
NTP-G88 Modify Users and Change Security **9-34**
NTP-G89 Change SNMP Settings **9-42**
NTP-G90 Modify Line Settings and PM Parameter Thresholds for Optical Service Channel Cards **10-2**
NTP-G91 Modify Line Settings and PM Parameter Thresholds for Amplifier Cards **10-10**
NTP-G92 Modify Line Settings and PM Parameter Thresholds for Multiplexer and Demultiplexer Cards **10-16**
NTP-G93 Modify Line Settings and PM Parameter Thresholds for 32WSS Cards **10-22**
NTP-G94 Provision Pluggable Port Modules **10-29**
NTP-G95 Delete Pluggable Port Modules **10-31**
NTP-G96 Modify Line Settings and PM Parameter Thresholds for TXP_MR_10G and TXP_MR_10E Cards **10-32**
NTP-G97 Modify Line Settings and PM Parameter Thresholds for MXP_2.5G_10G and MXP_2.5G_10E Cards **10-43**
NTP-G98 Modify Line Settings and PM Parameter Thresholds for TXP_MR_2.5G and TXPP_MR_2.5G Cards **10-55**
NTP-G99 Modify Line Settings and PM Parameter Thresholds for MXP_MR_2.5G and MXPP_MR_2.5G Cards **10-65**

NTP-G100 Modify Alarm Interface Controller Settings (ANSI Only) **10-77**
NTP-G101 Modify Alarm Interface Controller–International Settings **10-80**
NTP-G102 Change Card Service State **10-83**
NTP-G103 Back Up the Database **11-2**
NTP-G104 Restore the Database **11-3**
NTP-G105 Restore the Node to Factory Configuration **11-5**
NTP-G106 Reset Cards Using CTC **11-10**
NTP-G107 Remove and Replace DWDM Cards **11-12**
NTP-G108 Viewing the Audit Trail Records **11-19**
NTP-G109 Off-Load the Audit Trail Record **11-21**
NTP-G110 Off-Load the Diagnostics File **11-22**
NTP-G111 Revert to an Earlier Software Load **11-22**
NTP-G112 Change the Node Timing Reference **11-24**
NTP-G113 View the ONS 15454 Timing Report **11-25**
NTP-G114 Inspect, Clean, and Replace the Air Filter **11-29**
NTP-G115 Clean Fiber Connectors **11-32**
NTP-G116 Replace the Fan-Tray Assembly **11-35**
NTP-G117 Replace the ANSI Shelf Alarm Interface Panel **11-40**
NTP-G118 Replace the ANSI Shelf Plastic Lower Backplane Cover **11-44**
NTP-G119 Power Down the Node **12-1**

DLP-G1 Unpack and Verify the Shelf Assembly **1-6**
DLP-G2 Inspect the Shelf Assembly **1-7**
DLP-G3 Reverse the Mounting Bracket to Fit a 19-inch (482.6-mm) Rack (ANSI Only) **1-10**
DLP-G4 Install the External Brackets and Air Filter (ANSI Only) **1-11**
DLP-G5 Mount the Shelf Assembly in a Rack (One Person) **1-13**
DLP-G6 Mount the Shelf Assembly in a Rack (Two People) **1-15**
DLP-G7 Mount Multiple Shelf Assemblies in a Rack **1-16**
DLP-G8 Install the Air Ramp **1-19**
DLP-G9 Open the Front Cabinet Compartment (Door) **1-20**
DLP-G10 Remove the Front Door **1-21**
DLP-G11 Open the FMEC Cover **1-24**
DLP-G12 Remove the FMEC Cover **1-25**
DLP-G13 Remove the Lower Backplane Cover **1-26**
DLP-G14 Remove the Backplane Sheet Metal Cover **1-27**
DLP-G15 Connect the Office Ground to the ONS 15454 ETSI **1-32**
DLP-G16 Connect the Office Ground to the ONS 15454 ANSI **1-33**
DLP-G17 Connect Office Power to the ONS 15454 ETSI **1-35**
DLP-G18 Connect Office Power to the ONS 15454 ANSI **1-37**
DLP-G19 Turn On and Verify Office Power **1-39**
DLP-G20 Install Alarm Wires on the MIC-A/P (ETSI Only) **1-48**
DLP-G21 Install Timing Wires on the MIC-C/T/P (ETSI Only) **1-51**
DLP-G22 Install LAN Wires on the MIC-C/T/P (ETSI Only) **1-52**
DLP-G23 Install Alarm Wires on the Backplane (ANSI Only) **1-53**
DLP-G24 Install Timing Wires on the Backplane (ANSI Only) **1-56**
DLP-G25 Install LAN Wires on the Backplane (ANSI Only) **1-57**
DLP-G26 Install the TL1 Craft Interface (ANSI Only) **1-58**
DLP-G27 Install the DCU Shelf Assembly **1-67**
DLP-G28 Install the Fiber Patch Panel Shelf **1-68**
DLP-G29 Install the Fiber Storage Shelf **1-68**
DLP-G30 Install the FlexLayer Shelf **1-69**
DLP-G31 Install the FlexLayer Modules **1-69**

DLP-G32 Install the Y-Cable Protection Modules **1-71**

DLP-G33 Install the TCC2 Card **1-73**

DLP-G34 Install the AIC or AIC-I Card **1-76**

DLP-G35 Inspect the Shelf Installation and Connections **1-78**

DLP-G36 Measure Voltage **1-79**

DLP-G37 Run the CTC Installation Wizard for Windows **2-3**

DLP-G38 Run the CTC Installation Wizard for UNIX **2-6**

DLP-G39 Set Up a Windows PC for Craft Connection to an ONS 15454 on the Same Subnet Using Static IP Addresses **2-11**

DLP-G40 Set Up a Windows PC for Craft Connection to an ONS 15454 Using Dynamic Host Configuration Protocol **2-13**

DLP-G41 Set Up a Windows PC for Craft Connection to an ONS 15454 Using Automatic Host Detection **2-15**

DLP-G42 Set Up a Solaris Workstation for a Craft Connection to an ONS 15454 **2-18**

DLP-G43 Disable Proxy Service Using Internet Explorer (Windows) **2-21**

DLP-G44 Disable Proxy Service Using Netscape (Windows and UNIX) **2-21**

DLP-G45 Connect Computer to the ONS 15454 **2-24**

DLP-G46 Log into CTC **2-25**

DLP-G47 Install Public-Key Security Certificate **2-28**

DLP-G48 Create Login Node Groups **2-29**

DLP-G49 Add a Node to the Current Session or Login Group **2-30**

DLP-G50 Delete a Node from the Current Session or Login Group **2-31**

DLP-G51 Delete a Node from a Specified Login Node Group **2-31**

DLP-G52 Change the JRE Version **2-32**

DLP-G53 Configure the CTC Alerts Dialog Box for Automatic Popup **2-33**

DLP-G54 Create a New User—Single Node **3-4**

DLP-G55 Create a New User—Multiple Nodes **3-4**

DLP-G56 Provision IP Settings **3-9**

DLP-G57 Set the IP Address, Default Router, and Network Mask Using the LCD **3-13**

DLP-G58 Create a Static Route **3-15**

DLP-G59 Set Up or Change Open Shortest Path First Protocol **3-16**

DLP-G60 Set Up or Change Routing Information Protocol **3-18**

DLP-G61 Provision the IIOP Listener Port on the ONS 15454 **3-20**

DLP-G62 Provision the IIOP Listener Port on the CTC Computer **3-22**

DLP-G63 Install an SFP **3-32**

DLP-G64 Remove an SFP **3-32**

DLP-G65 Install Fiber-Optic Cables for OSC Link Terminations on All Nodes **3-37**

DLP-G66 Install Fiber-Optic Cables for a Hub Node **3-40**
DLP-G67 Install Fiber-Optic Cables for a Terminal Node **3-43**
DLP-G68 Install Fiber-Optic Cables for a Line Amplifier Node **3-44**
DLP-G69 Install Fiber-Optic Cables for an OSC Regeneration Node **3-46**
DLP-G70 Install Fiber-Optic Cables for an Amplified or Passive OADM Node **3-48**
DLP-G71 Install Fiber-Optic Cables for an ROADM Node **3-53**
DLP-G72 Create a DWDM Connection **3-57**
DLP-G73 Delete a DWDM Connection **3-57**
DLP-G74 Import a Cisco MetroPlanner Configuration File **3-59**
DLP-G75 Create OSC Terminations **3-61**
DLP-G76 Provision GCC Terminations **3-62**
DLP-G77 Provision the Ring ID **3-63**
DLP-G78 Verify the 32MUX-O and 32DMX-O Power **4-22**
DLP-G79 Verify the OPT-BST Amplifier Laser and Power **4-22**
DLP-G80 Verify the OPT-PRE Amplifier Laser and Power **4-23**
DLP-G81 Verify the 32DMX-O or 32DMX Power **4-24**
DLP-G82 Verify the OSC-CSM Power **4-24**
DLP-G83 Verify the OSC-CSM Power—OADM Nodes **4-25**
DLP-G84 Verify the OSC-CSM Incoming Power **4-25**
DLP-G85 Verify Express Channel Connections—OADM Node with OSCM Cards **4-26**
DLP-G86 Verify Express Channel Connections—OADM Node with OSC-CSM Cards **4-27**
DLP-G87 Verify the AD-xB-xx.x Output Express Power **4-28**
DLP-G88 Verify the AD-xC-xx.x Output Express Power **4-28**
DLP-G89 Verify OADM Node Pass-Through Channel Connections **4-29**
DLP-G90 Verify an AD-xB-xx.x Pass-Through Connection Power **4-30**
DLP-G91 Verify an AD-xC-xx.x Pass-Through Connection **4-31**
DLP-G92 Verify an 4MD-xx.x Pass-Through Connection Power **4-32**
DLP-G93 Verify Add and Drop Connections on OADM Node with OSCM Card **4-33**
DLP-G94 Verify Add and Drop Connections on OADM Node with OSC-CSM Card **4-35**
DLP-G95 Set Up External or Line Timing **5-4**
DLP-G96 Set Up Internal Timing **5-6**
DLP-G97 Provision a Proxy Tunnel **5-10**
DLP-G98 Provision a Firewall Tunnel **5-11**
DLP-G99 Create a Provisionable Patchcord **5-12**
DLP-G100 Search for Optical Channel Network Connections **6-2**

DLP-G101 View Optical Channel Network Connection Information **6-3**
DLP-G102 Filter the Display of Optical Channel Network Connections **6-6**
DLP-G103 View Optical Channel Network Connections on a Span **6-7**
DLP-G104 Assign a Name to a Port **6-8**
DLP-G105 Provision DWDM Optical Channel Network Connections **6-9**
DLP-G106 Delete Optical Channel Network Connections **6-11**
DLP-G107 Create an IP-Encapsulated Tunnel **6-13**
DLP-G108 Change the Service State for a Port **6-14**
DLP-G109 Provision Orderwire **6-15**
DLP-G110 Create a User Data Channel Circuit **6-16**
DLP-G111 Repair an IP Tunnel **6-17**
DLP-G112 Delete Overhead Circuits **6-18**
DLP-G113 Print CTC Data **7-2**
DLP-G114 Export CTC Data **7-4**
DLP-G115 View Alarms **7-6**
DLP-G116 View Alarm or Event History **7-8**
DLP-G117 Change the Maximum Number of Session Entries for Alarm History **7-10**
DLP-G118 Display Alarms and Conditions Using Time Zone **7-11**
DLP-G119 Synchronize Alarms **7-11**
DLP-G120 View Conditions **7-12**
DLP-G121 Create a New or Cloned Alarm Severity Profile **7-18**
DLP-G122 Download an Alarm Severity Profile **7-22**
DLP-G123 Apply Alarm Profiles to Ports **7-23**
DLP-G124 Apply Alarm Profiles to Cards and Nodes **7-26**
DLP-G125 Delete Alarm Severity Profiles **7-27**
DLP-G126 Enable Alarm Filtering **7-29**
DLP-G127 Modify Alarm, Condition, and History Filtering Parameters **7-30**
DLP-G128 Disable Alarm Filtering **7-32**
DLP-G129 Suppress Alarm Reporting **7-33**
DLP-G130 Discontinue Alarm Suppression **7-35**
DLP-G131 Refresh PM Counts at 15-Minute Intervals **8-2**
DLP-G132 Refresh PM Counts at One-Day Intervals **8-3**
DLP-G133 View Near-End PM Counts **8-4**
DLP-G134 View Far-End PM Counts **8-4**
DLP-G135 Reset Current PM Counts **8-5**

DLP-G136 Clear Selected PM Counts **8-6**
DLP-G137 Set Auto-Refresh Interval for Displayed PM Counts **8-6**
DLP-G138 Refresh PM Counts for a Different Port **8-7**
DLP-G139 View Optical Service Channel PM Parameters **8-8**
DLP-G140 View Optical Amplifier PM Parameters **8-10**
DLP-G141 View PMs for 32MUX-O, 32-WSS, 32-DMX-O, and 32DMX Cards **8-11**
DLP-G142 View Channel Filter Optical Add/Drop Multiplexer PM Parameters **8-12**
DLP-G143 View Band Filter Optical Add/Drop Multiplexer PM Parameters **8-14**
DLP-G144 Enable/Disable OTN ITU-T G.709 Performance Monitoring **8-16**
DLP-G145 Enable/Disable OTN FEC Performance Monitoring **8-17**
DLP-G146 View Optics PM Parameters **8-18**
DLP-G147 View Payload PM Parameters **8-19**
DLP-G148 View OTN PM Parameters **8-21**
DLP-G149 View Payload Statistics PM Parameters **8-22**
DLP-G150 View Payload Utilization PM Parameters **8-24**
DLP-G151 View Payload History PM Parameters **8-25**
DLP-G152 View Payload SONET PM Parameters **8-26**
DLP-G153 Create RMON Alarm Thresholds **8-28**
DLP-G154 Delete RMON Alarm Thresholds **8-30**
DLP-G155 Verify Optical Span Loss Using CTC **9-3**
DLP-G156 Measure Span Insertion Loss Using an OTDR **9-4**
DLP-G157 Disable Automatic Power Control **9-5**
DLP-G158 Enable Automatic Power Control **9-5**
DLP-G159 Refresh Automatic Power Control Information **9-6**
DLP-G160 Change the Node Name, Date, Time, and Contact Information **9-8**
DLP-G161 Change the Login Legal Disclaimer **9-9**
DLP-G162 Change IP Settings **9-11**
DLP-G163 Modify a Static Route **9-12**
DLP-G164 Delete a Static Route **9-13**
DLP-G165 Disable OSPF **9-13**
DLP-G166 Delete a Proxy Tunnel **9-14**
DLP-G167 Delete a Firewall Tunnel **9-14**
DLP-G168 Change the Network View Background Color **9-15**
DLP-G169 Change the Default Network View Background Map **9-16**
DLP-G170 Apply a Custom Network View Background Map **9-17**

DLP-G171 Create Domain Icons **9-17**
DLP-G172 Manage Domain Icons **9-18**
DLP-G173 Enable Dialog Box Do-Not-Display Option **9-19**
DLP-G174 Switch Between TDM and DWDM Network Views **9-20**
DLP-G175 Modify a Y-Cable Protection Group **9-21**
DLP-G176 Modify a Splitter Protection Group **9-22**
DLP-G177 Delete a Y-Cable Protection Group **9-22**
DLP-G178 Apply a Manual Y-Cable or Splitter Protection Switch **9-24**
DLP-G179 Apply a Force Y-Cable or Splitter Protection Switch **9-24**
DLP-G180 Clear a Manual or Force Y-Cable or Splitter Protection Switch **9-25**
DLP-G181 Apply a Lock On **9-26**
DLP-G182 Apply a Lock Out **9-26**
DLP-G183 Clear a Lock On or Lock Out **9-27**
DLP-G184 Change a GCC Termination **9-28**
DLP-G185 Delete a GCC Termination **9-29**
DLP-G186 Delete an OSC Termination **9-30**
DLP-G187 Delete a Provisionable Patchcord **9-30**
DLP-G188 Change Security Policy—Single Node **9-34**
DLP-G189 Change Security Policy—Multiple Nodes **9-36**
DLP-G190 Change Node Access and PM Clearing Privilege **9-37**
DLP-G191 Change User Password and Security Level—Single Node **9-38**
DLP-G192 Change User Password and Security Level—Multiple Nodes **9-38**
DLP-G193 Delete User—Single Node **9-39**
DLP-G194 Delete User—Multiple Nodes **9-40**
DLP-G195 Log Out a User—Single Node **9-40**
DLP-G196 Log Out a User—Multiple Nodes **9-41**
DLP-G197 Modify SNMP Trap Destinations **9-42**
DLP-G198 Delete SNMP Trap Destinations **9-43**
DLP-G199 Change Optical Line Settings for OSCM and OSC-CSM Cards **10-3**
DLP-G200 Change Line Threshold Settings for OSCM and OSC-CSM Cards **10-5**
DLP-G201 Change Optical Line Parameters for OSCM and OSC-CSM Cards **10-6**
DLP-G202 Change Optical Channel Threshold Settings for OSCM and OSC-CSM Cards **10-8**
DLP-G203 Change Maintenance Settings for Automatic Laser Shutdown **10-9**
DLP-G204 Change Optical Line Settings for OPT-PRE and OPT-BST Amplifiers **10-10**
DLP-G205 Change Optical Line Threshold Settings for OPT-PRE and OPT-BST Amplifiers **10-12**

DLP-G206 Change Optical Amplifier Line Settings for OPT-PRE and OPT-BST Amplifiers **10-13**
DLP-G207 Change Optical Channel Threshold Settings for OPT-PRE and OPT-BST Amplifiers **10-15**
DLP-G208 Change Optical Line Settings for Multiplexer and Demultiplexer Cards **10-17**
DLP-G209 Change Optical Line Threshold Settings for Multiplexer and Demultiplexer Cards **10-18**
DLP-G210 Change Optical Channel Settings for Multiplexer and Demultiplexer Cards **10-19**
DLP-G211 Change Optical Channel Threshold Settings for Multiplexer and Demultiplexer Cards **10-21**
DLP-G212 Change Optical Channel Parameters for the 32WSS Card **10-23**
DLP-G213 Change Optical Channel Optics Thresholds for the 32WSS Card **10-25**
DLP-G214 Change Optical Line Parameters for the 32WSS Card **10-26**
DLP-G215 Change Optical Line Optics Thresholds for the 32WSS Card **10-28**
DLP-G216 Change Card Settings for TXP_MR_10G and TXP_MR_10E Cards **10-33**
DLP-G217 Change Line Settings for TXP_MR_10G and TXP_MR_10E Cards **10-34**
DLP-G218 Change Section Trace Settings for the TXP_MR_10G Card **10-37**
DLP-G219 Change Line Threshold Settings for TXP_MR_10G and TXP_MR_10E Cards **10-38**
DLP-G220 Change Optical Thresholds Settings for TXP_MR_10G and TXP_MR_10E Cards **10-39**
DLP-G221 Change OTN Settings for TXP_MR_10G and TXP_MR_10E Cards **10-40**
DLP-G222 Change Card Settings for MXP_2.5G_10G and MXP 2.5G_10E Cards **10-44**
DLP-G223 Change Line Settings for MXP_2.5G_10G and MXP 2.5G_10E Cards **10-45**
DLP-G224 Change Section Trace Settings for MXP_2.5G_10G and MXP_2.5G_10E Cards **10-47**
DLP-G225 Change Trunk Settings for MXP_2.5G_10G and MXP_2.5G_10E Cards **10-48**
DLP-G226 Change Line Thresholds Settings for MXP_2.5G_10G and MXP 2.5G_10E Cards **10-49**
DLP-G227 Change Optical Threshold Settings for MXP_2.5G_10G and MXP_2.5G_10E Cards **10-51**
DLP-G228 Change Line OTN Settings for MXP_2.5G_10G and MXP_2.5G_10E Cards **10-52**
DLP-G229 Change Card Settings for TXP_MR_2.5G and TXPP_MR_2.5G Cards **10-55**
DLP-G230 Change Line Settings for TXP_MR_2.5G and TXPP_MR_2.5G Cards **10-57**
DLP-G231 Change Section Trace Settings for TXP_MR_2.5G and TXPP_MR_2.5G Cards **10-58**
DLP-G232 Change Line Threshold Settings for TXP_MR_2.5G and TXPP_MR_2.5G Cards **10-59**
DLP-G233 Change Optical Thresholds Settings for TXP_MR_2.5G and TXPP_MR_2.5G Cards **10-61**
DLP-G234 Change OTN Settings for TXP_MR_2.5G and TXPP_MR_2.5G Cards **10-62**
DLP-G235 Change Card Settings for MXP_MR_2.5G and MXPP_MR_2.5G Cards **10-66**
DLP-G236 Change Line Settings for MXP_MR_2.5G and MXPP_MR_2.5G Cards **10-67**
DLP-G237 Change Distance Extension Settings for MXP_MR_2.5G and MXPP_MR_2.5G Cards **10-69**
DLP-G238 Change OC48 Settings for MXP_MR_2.5G and MXPP_MR_2.5G Cards **10-70**
DLP-G239 Change Section Trace Settings for MXP_MR_2.5G and MXPP_MR_2.5G Cards **10-72**

DLP-G240 Change Line Threshold Settings for MXP_MR_2.5G and MXPP_MR_2.5G Cards **10-73**

DLP-G241 Change Optical Thresholds Settings for MXP_MR_2.5G and MXPP_MR_2.5G Cards **10-75**

DLP-G242 Change External Alarms Using the AIC Card **10-77**

DLP-G243 Change External Controls Using the AIC Card **10-78**

DLP-G244 Change Orderwire Settings Using the AIC Card **10-79**

DLP-G245 Change External Alarms Using the AIC-I Card **10-80**

DLP-G246 Change External Controls Using the AIC-I Card **10-81**

DLP-G247 Change AIC-I Card Orderwire Settings **10-82**

DLP-G248 Use the Reinitialization Tool to Clear the Database and Upload Software (Windows) **11-6**

DLP-G249 Use the Reinitialization Tool to Clear the Database and Upload Software (UNIX) **11-8**

DLP-G250 Reset the TCC2 Card **11-10**

DLP-G251 Reset DWDM Cards Using CTC **11-11**

DLP-G252 Place TXP and MXP Ports Out of Service **11-14**

DLP-G253 Place OSCM and OSC-CSM Ports Out of Service **11-15**

DLP-G254 Place OPT-BST and OPT-BST Ports Out of Service **11-16**

DLP-G255 Place 32MUX-0, 32WSS, 32DMX-O, and 32DMX Ports Out of Service **11-16**

DLP-G256 Place 4MD-xx.x Ports Out of Service **11-17**

DLP-G257 Place Band OADM Ports Out of Service **11-18**

DLP-G258 Place Channel OADM Ports Out of Service **11-18**

DLP-G259 Manual or Force Switch the Node Timing Reference **11-24**

DLP-G260 Clear a Manual or Force Switch on a Node Timing Reference **11-25**

DLP-G261 Scope and Clean Fiber Connectors and Adapters with Alcohol and Dry Wipes **11-33**

DLP-G262 Clean Fiber Connectors with CLETOP **11-34**

DLP-G263 Clean the Fiber Adapters **11-34**

About this Guide

Note The terms "Unidirectional Path Switched Ring" and "UPSR" may appear in Cisco literature. These terms do not refer to using Cisco ONS 15xxx products in a unidirectional path switched ring configuration. Rather, these terms, as well as "Path Protected Mesh Network" and "PPMN," refer generally to Cisco's path protection feature, which may be used in any topological network configuration. Cisco does not recommend using its path protection feature in any particular topological network configuration.

This section explains the objectives, intended audience, and organization of this publication and describes the conventions that convey instructions and other information.

Revision History

Date	Notes
03/28/2007	Revision History Table added for the first time
08/27/2007	Updated About this Guide chapter

This section provides the following information:

- Document Objectives
- Audience
- Document Organization
- Related Documentation
- Document Conventions
- Where to Find Safety and Warning Information
- Obtaining Documentation
- Documentation Feedback
- Obtaining Technical Assistance
- Obtaining Additional Publications and Information

Document Objectives

This document explains installation, turn up, provisioning, and maintenance for Cisco ONS 15454 dense wavelength division (DWDM) systems. Use this document in conjunction with the appropriate publications listed in the Related Documentation section.

Audience

To use this publication, you should be familiar with Cisco or equivalent optical transmission hardware and cabling, telecommunications hardware and cabling, electronic circuitry and wiring practices, and preferably have experience as a telecommunications technician.

Document Organization

The *Cisco ONS 15454 DWDM Installation and Operations Guide, Release 4.7* is organized into the following chapters:

- Chapter 1, "Install the Shelf and Common Control Cards" provides procedures for installing Cisco ONS 15454 ANSI and ETSI shelves and common control cards including the TCC2 and AIC/AIC-I.
- Chapter 2, "Connect the PC and Log into the GUI" includes procedures to install the Cisco Transport Controller (CTC), set up a computer for different connection types, and log into the Cisco ONS 15454.
- Chapter 3, "Turn Up a Node"provides procedures for node turn up and DWDM card installation.
- Chapter 4, "Perform Node Acceptance Tests" provides acceptance tests for each DWDM node type.
- Chapter 5, "Turn Up Network" explains how to turn up and test a DWDM network.
- Chapter 6, "Create Channels and Circuits" explains how to create DWDM optical channel network connections (OCHNCs) and overhead circuits.
- Chapter 7, "Manage Alarms"explains how to document existing node data, view and delete alarms, view alarm-affected circuits and LCD alarm counts, manage alarm profiles, filter alarms, suppress alarms, and provision external alarms.
- Chapter 8, "Monitor Performance" provides procedures to change the performance monitoring (PM) display, monitor performance, and manage remote monitoring (RMON) thresholds.
- Chapter 9, "Manage the Node" explains how to modify node provisioning for the Cisco ONS 15454 and perform common management tasks such as monitoring the DWDM automatic power control and span loss values.
- Chapter 10, "Change Card Settings" explains how to change line, performance monitoring (PM), and threshold settings on Cisco ONS 15454 cards.
- Chapter 11, "Maintain the Node" provides hardware and software maintenance procedures for the Cisco ONS 15454.
- Chapter 12, "Power Down the Node" explains how to shut down an ONS 15454.
- Chapter 13, "Shelf Hardware Reference" includes descriptions of the rack, backplane, FMECs, ferrites, power and ground, fan-tray assembly, air filter, card slots, cables, cable connectors, and cable routing.

- Chapter 14, "Card Reference" provides descriptions of the common control, transponder/muxponder, and DWDM cards as well as small-form factor pluggables (SFPs).
- Chapter 15, "DWDM Node Reference" explains the ONS 15454DWDM node types that are available for the ONS 15454. The chapter also explains the DWDM automatic power control, ROADM power equalization, span loss verification, and automatic node setup functions.
- Chapter 16, "DWDM Network Reference" explains the ONS 15454 DWDM network applications and topologies.
- Chapter 17, "Cisco Transport Controller Operation" includes information about CTC installation, the CTC window, computer requirements, software versions, and database reset and revert.
- Chapter 18, "Security and Timing" describes user security and node/network timing.
- Chapter 19, "CTC Connectivity Reference" includes IP addressing scenarios and information about provisionable patchcords, open GNE, and external firewalls.
- Chapter 20, "Alarm Monitoring and Management" describes Cisco Transport Controller (CTC) alarm management.
- Appendix A, "CTC Information and Shortcuts" describes the CTC views, menus options, tool options, shortcuts, table display options, and shelf inventory data.
- Appendix B, "Hardware Specifications" contains hardware and software specifications for the ONS 15454 ANSI and ETSI shelf assemblies and cards.
- Appendix C, "DWDM Enhanced State Model" describes the state model for Cisco ONS 15454 DWDM cards, optical payload ports, out-of-band optical supervision channel (OSC) ports, optical channel network connections (OCHNC), and transponder/muxponder cards and ports.

Related Documentation

Use this *Cisco ONS 15454 DWDM Installation and Operations Guide, Release 4.7* in conjunction with the following referenced publications:

- *Cisco ONS 15454 SONET and DWDM Troubleshooting Guide, Release 4.7*
- *Cisco ONS 15454 SONET and SDH TL1 Quick Reference Guide, Release 4.7*
- *Cisco ONS 15454 Release 4.7 Network Element Defaults*
- *Cisco ONS 15454 SDH Release 4.7 Network Element Defaults*
- *Release Notes for Cisco ONS 15454 Release 4.7*
- *Release Notes for Cisco ONS 15454 SDH Release 4.7*

Document Conventions

This publication uses the following conventions:

Convention	Application
boldface	Commands and keywords in body text.
italic	Command input that is supplied by the user.

Convention	Application
[ ]	Keywords or arguments that appear within square brackets are optional.
{ x | x | x }	A choice of keywords (represented by x) appears in braces separated by vertical bars. The user must select one.
Ctrl	The control key. For example, where Ctrl + D is written, hold down the Control key while pressing the D key.
`screen font`	Examples of information displayed on the screen.
`boldface screen font`	Examples of information that the user must enter.
< >	Command parameters that must be replaced by module-specific codes.

Note Means *reader take note*. Notes contain helpful suggestions or references to material not covered in the document.

Caution Means *reader be careful*. In this situation, the user might do something that could result in equipment damage or loss of data.

Warning

IMPORTANT SAFETY INSTRUCTIONS

This warning symbol means danger. You are in a situation that could cause bodily injury. Before you work on any equipment, be aware of the hazards involved with electrical circuitry and be familiar with standard practices for preventing accidents. Use the statement number provided at the end of each warning to locate its translation in the translated safety warnings that accompanied this device. Statement 1071

SAVE THESE INSTRUCTIONS

Where to Find Safety and Warning Information

For safety and warning information, refer to the *Cisco Optical Transport Products Safety and Compliance Information* document that accompanied the product. This publication describes the international agency compliance and safety information for the Cisco ONS 15xxx systems. It also includes translations of the safety warnings that appear in the ONS 15xxx system documentation.

Obtaining Documentation

Cisco documentation and additional literature are available on Cisco.com. Cisco also provides several ways to obtain technical assistance and other technical resources. These sections explain how to obtain technical information from Cisco Systems.

Cisco.com

You can access the most current Cisco documentation at this URL:

http://www.cisco.com/univercd/home/home.htm

You can access the Cisco website at this URL:

http://www.cisco.com

You can access international Cisco websites at this URL:

http://www.cisco.com/public/countries_languages.shtml

Ordering Documentation

You can find instructions for ordering documentation at this URL:

http://www.cisco.com/univercd/cc/td/doc/es_inpck/pdi.htm

You can order Cisco documentation in these ways:

- Registered Cisco.com users (Cisco direct customers) can order Cisco product documentation from the Ordering tool:

  http://www.cisco.com/en/US/partner/ordering/index.shtml

- Nonregistered Cisco.com users can order documentation through a local account representative by calling Cisco Systems Corporate Headquarters (California, USA) at 408 526-7208 or, elsewhere in North America, by calling 800 553-NETS (6387).

Cisco Optical Networking Product Documentation CD-ROM

Optical networking-related documentation, including Cisco ONS 15xxx product documentation, is available in a CD-ROM package that ships with your product. The Optical Networking Product Documentation CD-ROM is updated periodically and may be more current than printed documentation.

Documentation Feedback

You can send comments about technical documentation to bug-doc@cisco.com.

You can submit comments by using the response card (if present) behind the front cover of your document or by writing to the following address:

Cisco Systems
Attn: Customer Document Ordering
170 West Tasman Drive
San Jose, CA 95134-9883

We appreciate your comments.

Obtaining Technical Assistance

For all customers, partners, resellers, and distributors who hold valid Cisco service contracts, Cisco Technical Support provides 24-hour-a-day, award-winning technical assistance. The Cisco Technical Support Website on Cisco.com features extensive online support resources. In addition, Cisco Technical Assistance Center (TAC) engineers provide telephone support. If you do not hold a valid Cisco service contract, contact your reseller.

Cisco Technical Support Website

The Cisco Technical Support Website provides online documents and tools for troubleshooting and resolving technical issues with Cisco products and technologies. The website is available 24 hours a day, 365 days a year at this URL:

http://www.cisco.com/techsupport

Access to all tools on the Cisco Technical Support Website requires a Cisco.com user ID and password. If you have a valid service contract but do not have a user ID or password, you can register at this URL:

http://tools.cisco.com/RPF/register/register.do

Submitting a Service Request

Using the online TAC Service Request Tool is the fastest way to open S3 and S4 service requests. (S3 and S4 service requests are those in which your network is minimally impaired or for which you require product information.) After you describe your situation, the TAC Service Request Tool automatically provides recommended solutions. If your issue is not resolved using the recommended resources, your service request will be assigned to a Cisco TAC engineer. The TAC Service Request Tool is located at this URL:

http://www.cisco.com/techsupport/servicerequest

For S1 or S2 service requests or if you do not have Internet access, contact the Cisco TAC by telephone. (S1 or S2 service requests are those in which your production network is down or severely degraded.) Cisco TAC engineers are assigned immediately to S1 and S2 service requests to help keep your business operations running smoothly.

To open a service request by telephone, use one of the following numbers:

Asia-Pacific: +61 2 8446 7411 (Australia: 1 800 805 227)
EMEA: +32 2 704 55 55
USA: 1 800 553 2447

For a complete list of Cisco TAC contacts, go to this URL:

http://www.cisco.com/techsupport/contacts

Definitions of Service Request Severity

To ensure that all service requests are reported in a standard format, Cisco has established severity definitions.

Severity 1 (S1)—Your network is "down," or there is a critical impact to your business operations. You and Cisco will commit all necessary resources around the clock to resolve the situation.

Severity 2 (S2)—Operation of an existing network is severely degraded, or significant aspects of your business operation are negatively affected by inadequate performance of Cisco products. You and Cisco will commit full-time resources during normal business hours to resolve the situation.

Severity 3 (S3)—Operational performance of your network is impaired, but most business operations remain functional. You and Cisco will commit resources during normal business hours to restore service to satisfactory levels.

Severity 4 (S4)—You require information or assistance with Cisco product capabilities, installation, or configuration. There is little or no effect on your business operations.

Obtaining Additional Publications and Information

Information about Cisco products, technologies, and network solutions is available from various online and printed sources.

- Cisco Marketplace provides a variety of Cisco books, reference guides, and logo merchandise. Visit Cisco Marketplace, the company store, at this URL:

  http://www.cisco.com/go/marketplace/

- The Cisco *Product Catalog* describes the networking products offered by Cisco Systems, as well as ordering and customer support services. Access the Cisco Product Catalog at this URL:

  http://cisco.com/univercd/cc/td/doc/pcat/

- *Cisco Press* publishes a wide range of general networking, training and certification titles. Both new and experienced users will benefit from these publications. For current Cisco Press titles and other information, go to Cisco Press at this URL:

  http://www.ciscopress.com

- *Packet* magazine is the Cisco Systems technical user magazine for maximizing Internet and networking investments. Each quarter, Packet delivers coverage of the latest industry trends, technology breakthroughs, and Cisco products and solutions, as well as network deployment and troubleshooting tips, configuration examples, customer case studies, certification and training information, and links to scores of in-depth online resources. You can access Packet magazine at this URL:

  http://www.cisco.com/packet

- *iQ Magazine* is the quarterly publication from Cisco Systems designed to help growing companies learn how they can use technology to increase revenue, streamline their business, and expand services. The publication identifies the challenges facing these companies and the technologies to help solve them, using real-world case studies and business strategies to help readers make sound technology investment decisions. You can access iQ Magazine at this URL:

  http://www.cisco.com/go/iqmagazine

- *Internet Protocol Journal* is a quarterly journal published by Cisco Systems for engineering professionals involved in designing, developing, and operating public and private internets and intranets. You can access the Internet Protocol Journal at this URL:

  http://www.cisco.com/ipj

- World-class networking training is available from Cisco. You can view current offerings at this URL:

  http://www.cisco.com/en/US/learning/index.html

Install the Shelf and Common Control Cards

This chapter explains how to install the Cisco ONS 15454 ETSI and Cisco ONS 15454 ANSI shelf assemblies. Where procedures differ for the two shelf types, the procedure will indicate "ANSI only" or "ETSI only." For a summary of the tools and equipment required for installation, see the "Required Tools and Equipment (ETSI)" section on page 1-4 or the "Required Tools and Equipment (ANSI)" section on page 1-2.

Note Unless otherwise specified, "ONS 15454" refers to both ANSI and ETSI shelf assemblies.

Before You Begin

This section lists the chapter procedures (NTPs). Turn to a procedure for applicable tasks (DLPs). Read the installation procedures and precautions before you install the ONS 15454 ANSI or ONS 15454 ETSI and connect the power source.

1. NTP-G1 Unpack and Inspect the Shelf Assembly, page 1-6—Complete this procedure before continuing with the "NTP-G2 Install the Shelf Assembly" procedure on page 1-8.
2. NTP-G2 Install the Shelf Assembly, page 1-8—Complete this procedure to install the shelf assembly in a rack.
3. NTP-G3 Open and Remove the Front Door, page 1-20—Complete this procedure to access the equipment before continuing with other procedures in this chapter.
4. NTP-G4 Open and Remove the FMEC Cover (ETSI Only), page 1-23—Complete this procedure to access the electrical facility connection assembly (EFCA) for the front mount electrical connections (FMECs) before continuing with other procedures in this chapter.
5. NTP-G5 Remove the Backplane Covers (ANSI Only), page 1-26— Complete this procedure to access the backplane before continuing with other procedures.
6. NTP-G6 Install the MIC-A/P and MIC-T/C/P FMECs (ETSI Only), page 1-27—Complete this procedure to install the MIC-A/P and MIC-T/C/P FMECs, which are required for power supply as well as alarm, timing, and LAN connections.
7. NTP-G7 Install the Power and Ground, page 1-30—Complete this procedure before continuing with the "NTP-G8 Install the Fan-Tray Assembly" procedure on page 1-40.
8. NTP-G8 Install the Fan-Tray Assembly, page 1-40—Complete this procedure to install the fan-tray assembly in the shelf.

9. NTP-G9 Install the Alarm Expansion Panel (ANSI Only), page 1-44—Complete this procedure if you are planning to install the Alarm Interface Controller–International (AIC-I) card and want to increase the number of alarm contacts provided by the AIC-I card.
10. NTP-G10 Attach Wires to Alarm, Timing, LAN, and Craft Pin Connections, page 1-47—Complete as needed to set up wire-wrap pin connections.
11. NTP-G11 Install an External Wire-Wrap Panel on the AEP (ANSI Only), page 1-59 —Complete this procedure to connect an external wire-wrap panel to the alarm expansion panel (AEP).
12. NTP-G12 Install and Close the FMEC Cover (ETSI Only), page 1-63—Complete this procedure to install the FMEC cover.
13. NTP-G13 Install the Rear Cover (ANSI Only), page 1-65—Complete this procedure as needed to install the rear cover after you have finished servicing the backplane.
14. NTP-G14 Install DWDM Equipment, page 1-66—Complete this procedure as needed to install equipment needed for DWDM networks.
15. NTP-G15 Install the Common Control Cards, page 1-72—Complete this procedure to install the TCC2 card and the Alarm Interface Controller (AIC) or AIC-I card.
16. NTP-G16 Perform the Shelf Installation Acceptance Test, page 1-77—Complete this procedure to determine if you have correctly completed all other procedures in the chapter.

Warning **This equipment must be installed and maintained by service personnel as defined by AS/NZS 3260. Incorrectly connecting this equipment to a general-purpose outlet could be hazardous. The telecommunications lines must be disconnected 1) before unplugging the main power connector or 2) while the housing is open, or both.**

Warning **This unit is intended for installation in restricted access areas. A restricted access area can be accessed only through the use of a special tool, lock and key, or other means of security.**

Warning **Ultimate disposal of this product should be handled according to all national laws and regulations.**

Warning **A readily accessible two-poled disconnect device must be incorporated in the fixed wiring.**

Note The ONS 15454 is suitable for mounting on concrete or other noncombustible surfaces only.

Note In this chapter, “shelf assembly” refers to the steel enclosure that holds cards and connects power, and “node” refers to the entire hardware and software system.

Required Tools and Equipment (ANSI)

You need the following tools and equipment to install and test the ONS 15454 ANSI shelf assembly.

Cisco-Supplied Materials (ANSI)

The following materials are required and are shipped with the ONS 15454 ANSI shelf (wrapped in plastic). The number in parentheses gives the quantity of the item included in the package.

- #12-24 x 3/4 pan-head Phillips mounting screws (48-1004-XX, 48-1007-XX) (8)
- #12 -24 x 3/4 socket set screws (48-1003-XX) (2)
- T-handle #12-24 hex tool for set screws (1)
- ESD wrist strap with 1.8 m (6 ft) coil cable (1)
- Tie wraps (10)
- Pinned hex (Allen) key for front door (1)
- Spacers (50-1193-XX) (4)
- Spacer mounting brackets (2)
- Clear plastic rear cover (1)
- External (bottom) brackets for the fan-tray air filter
- Standoff kit (53-0795-XX):
  - Plastic fiber management guides (2)
  - Fan filter bracket screws (53-48-0003) (6)

User-Supplied Materials (ANSI)

The following materials and tools are required but are not supplied with the ONS 15454 ANSI:

- One or more of the following equipment racks:
  - 19-inch ANSI Standard (Telcordia GR-63-CORE) (482.6 mm) rack; total width 22 inches (558.8 mm)
  - 23-inch ANSI Standard (Telcordia GR-63-CORE) (584.2 mm) rack; total width 26 inches (660.4 mm)
- Fuse panel
- Power cable (from fuse and alarm panel to assembly), #10AWG, copper conductors, 194 degrees Fahrenheit (90 degrees Celsius)

  Note If you are installing power on a 15454-SA-NEBS3E, 15454-SA-NEBS3, or 15454-SA-R1 shelf assembly, a #10 to #12 AWG power cable is required.

- Ground cable #6AWG stranded

  Note If you are installing power on a 15454-SA-NEBS3E, 15454-SA-NEBS3 or 15454-SA-R1 shelf assembly, the #10 AWG ground cable is required.

- Alarm cable pairs for all alarm connections, #22 or #24 AWG (0.51 mm² or 0.64 mm²), solid tinned
- 100-ohm shielded BITS clock cable pair #22 or #24 AWG (0.51 mm² or 0.64 mm²), twisted-pair T1-type

- Single-mode SC fiber jumpers with UPC polish (55 dB or better) for optical (OC-N) cards
- Shielded coaxial cable terminated with SMB or BNC connectors for DS-3 cards
- Shielded ABAM cable terminated with AMP Champ connectors or unterminated for DS1N-14 cards with #22 or #24 AWG (0.51 mm^2 or 0.64 mm^2) ground wire (typically about two ft [61 cm] in length)
- 6-pair #29 AWG double-shielded cable
- Tie wraps and/or lacing cord
- Labels
- Listed pressure terminal connectors such as ring and fork types; connectors must be suitable for #10 AWG copper conductors

Tools Needed (ANSI)

The following tools are needed to install an ONS 15454 ANSI:

- #2 Phillips screwdriver
- Medium slot-head screwdriver
- Small slot-head screwdriver
- Wire wrapper
- Wire cutters
- Wire strippers
- Crimp tool
- BNC insertion tool

Test Equipment (ANSI)

The following test equipment is needed to install an ONS 15454:

- Voltmeter
- Optical power meter (for use with fiber optics only)
- BER tester, DS-1 and DS-3

Required Tools and Equipment (ETSI)

You need the following tools and equipment to install and test the ONS 15454 ETSI shelf assembly.

Cisco-Supplied Equipment (ETSI)

These materials are required for installation and are supplied with the ONS 15454 ETSI. The shipped quantity of each item is in parentheses.

- Double-hole grounding lug for ground connection with a wire receptacle to accommodate the recommended 13.3 mm^2 (#6 AWG) multi-strand copper wire (1)
- M4 x 8 mm pan-head Phillips screws (2)
- M6 x 20 mm socket set screws (2)

- M6 x 20 mm pan-head Phillips screws (8)
- Tie wraps 0.125-inch (3.2 mm) W x 6.0-inch (152 mm) L (24)
- ESD wrist strap (disposable) (1)
- Pinned Allen key for front door (1)
- Hex key 3-mm long arm (1)
- Bottom brackets for the fan-tray air filter
- Cable assembly, Ethernet, RJ-45 (1)
- Power cable (from fuse and alarm panel to MIC-A/P and MIC-C/T/P) (2)

Caution Only use the power cables that are designed to be used with ONS 15454 ETSI. They are sold separately.

User-Supplied Equipment (ETSI)

The following materials and tools are required for installation but are not supplied with the ONS 15454 ETSI:

- Equipment rack (ETSI rack, 2200 mm [86.6 inch] H x 600 mm [23.6 inch] W x 300 mm [11.8 inch] D)
- Fuse and alarm panel
- Copper ground cable 13.3-mm² (#6 AWG) stranded, specified for up to 90 degrees Celsius (194 degrees Fahrenheit)
- Alarm cable pairs for all alarm connections, 0.51 mm² or 0.64 mm² (#22 or #24 AWG), solid-tinned
- Single-mode SC fiber jumpers with UPC polish (55 dB or better) for optical cards
- Coaxial cable terminated with 1.0/2.3 miniature coax connectors for FMEC cards
- DB-37 cable
- Shielded building integrated timing supply (BITS) clock coaxial cable terminated with 1.0/2.3 miniature coax connectors
- Labels

Note Ring runs are not provided by Cisco and can hinder side-by-side shelf installation where space is limited.

Tools Needed (ETSI)

To install the ONS 15454 ETSI, you need the following tools.

- #2 Phillips screwdriver
- Medium slot-head screwdriver
- Small slot-head screwdriver
- Video fiber connector inspection instrument
- CLETOP cleaning cassette

- Crimping tool—This tool must be large enough to accommodate the girth of the grounding lug when you crimp the grounding cable into the lug.
- Wire stripping tool

Test Equipment (ETSI)

To install the ONS 15454 ETSI, you need the following test equipment.

- Voltmeter
- Power meter (only for use with fiber optics)
- Bit error rate (BER) tester for E1-N-14, E1-42, E3-12, DS3i-N-12, STM1E-12, and FMEC cards

NTP-G1 Unpack and Inspect the Shelf Assembly

Purpose	This procedure explains how to unpack the ONS 15454 shelf assemblies and verify their contents.
Tools/Equipment	Pinned hex (Allen) key for front door
Prerequisite Procedures	None
Required/As Needed	Required
Onsite/Remote	Onsite
Security Level	None

Step 1 Complete the "DLP-G1 Unpack and Verify the Shelf Assembly" task on page 1-6.

Step 2 Complete the "DLP-G2 Inspect the Shelf Assembly" task on page 1-7.

Step 3 Continue with the "NTP-G1 Unpack and Inspect the Shelf Assembly" procedure on page 1-6.

Stop. You have completed this procedure.

DLP-G1 Unpack and Verify the Shelf Assembly

Purpose	This task removes the shelf assembly from the package.
Tools/Equipment	None
Prerequisite Procedures	None
Required/As Needed	Required
Onsite/Remote	Onsite
Security Level	None

Step 1 When you receive the ONS 15454 system equipment at the installation site, open the top of the box. The Cisco Systems logo designates the top of the box.

Step 2 Remove the foam inserts from the box. The box contains the ONS 15454 shelf (wrapped in plastic) and a smaller box of items needed for installation.

Step 3 To remove the shelf, grasp both rings of the shelf removal strap and slowly lift the shelf out of the box.

Step 4 Open the smaller box of installation materials, and verify that you have all items listed in the "Required Tools and Equipment (ETSI)" section on page 1-4 or the "Required Tools and Equipment (ANSI)" section on page 1-2.

Note The fan-tray assembly is shipped separately.

Step 5 Return to your originating procedure (NTP).

DLP-G2 Inspect the Shelf Assembly

Purpose	This task verifies that all parts of the shelf assembly are in good condition.
Tools/Equipment	Pinned hex (Allen) key for front door
Prerequisite Procedures	DLP-G1 Unpack and Verify the Shelf Assembly, page 1-6
Required/As Needed	Required
Onsite/Remote	Onsite
Security Level	None

Step 1 Open the shelf using the pinned hex key. For more information, see the "DLP-G9 Open the Front Cabinet Compartment (Door)" task on page 1-20.

Step 2 Verify the following:

- The pins are not bent or broken.
- The frame is not bent.

Step 3 If the pins are bent or broken, or the frame is bent, call your Cisco sales engineer for a replacement.

Step 4 Close the front door before installing.

Step 5 Return to your originating procedure (NTP).

NTP-G2 Install the Shelf Assembly

Purpose	This procedure reverses the mounting bracket and mounts shelf assemblies in a rack.
Tools/Equipment	#2 Phillips screwdriver Medium slot-head screwdriver Small slot-head screwdriver Pinned hex tool ETSI only: Two M6 x 20 socket set screws Eight M6 x 20 pan-head Phillips mounting screws ANSI only: Two #12-24 x 3/4 set screws (48-1003-XX) Eight #12-24 x 3/4 pan-head Phillips mounting screws (48-1004-XX, 48-1007-XX)
Prerequisite Procedures	NTP-G1 Unpack and Inspect the Shelf Assembly, page 1-6
Required/As Needed	Required
Onsite/Remote	Onsite
Security Level	None

Warning **Stability hazard. The rack stabilizing mechanism must be in place, or the rack must be bolted to the floor before you slide the unit out for servicing. Failure to stabilize the rack can cause the rack to tip over.**

Warning **This product requires short-circuit (overcurrent) protection, to be provided as part of the building installation. Install only in accordance with national and local wiring regulations.**

Warning **To prevent the system from overheating, do not operate it in an area that exceeds the maximum recommended ambient temperature of: 45°C (113°F).**

Warning **Take care when connecting units to the supply circuit so that wiring is not overloaded.**

Warning **To prevent bodily injury when mounting or servicing this unit in a rack, you must take special precautions to ensure that the system remains stable. The following guidelines are provided to ensure your safety:**

- **This unit should be mounted at the bottom of the rack if it is the only unit in the rack.**
- **When mounting this unit in a partially filled rack, load the rack from the bottom to the top with the heaviest component at the bottom of the rack.**
- **If the rack is provided with stabilizing devices, install the stabilizers before mounting or servicing the unit in the rack.**

Warning **To prevent the equipment from overheating, do not operate it in an area that exceeds the maximum recommended ambient temperature of 131°F (55°C). To prevent airflow restriction, allow at least 1 inch (25.4 mm) of clearance around the ventilation openings.**

Warning **The ONS 15454 should be installed in the lower rack position or mounted above another ONS 15454 shelf assembly.**

Warning **The ONS 15454 must have 1 inch (25.4 mm) of airspace below the installed shelf assembly to allow air flow to the fan intake. The air ramp (the angled piece of sheet metal on top of the shelf assembly) provides this spacing and should not be modified in any way.**

Note The 10-Gbps-compatible shelf assembly (15454-SA-10G) and fan-tray assembly (15454-FTA3) are required with the ONS 15454 XC10G, OC-192, and OC-48 any slot (AS) cards.

Note The shelf, the air ramp, and the E1-75/120 conversion panel ship with the ETSI mounting brackets installed as needed for installation in an ETSI rack. If you want to install the node in a 19-inch (482.6-mm) rack, the ETSI mounting brackets of the shelf and the air ramp need to be replaced with the 19-inch (482.6-mm) mounting brackets that shipped in the ship kit.

Step 1 (ANSI shelves only.) Complete the "DLP-G3 Reverse the Mounting Bracket to Fit a 19-inch (482.6-mm) Rack (ANSI Only)" task on page 1-10 if you need to convert from a 23-inch (584.2 mm) to a 19-inch (482.6 mm) rack.

Step 2 (ANSI shelves only.) To install the air filter on the bottom of the shelf rather than below the fan-tray assembly, complete the "DLP-G4 Install the External Brackets and Air Filter (ANSI Only)" task on page 1-11.

Step 3 Complete the necessary rack mount task as applicable:

- DLP-G5 Mount the Shelf Assembly in a Rack (One Person), page 1-13

- DLP-G6 Mount the Shelf Assembly in a Rack (Two People), page 1-15
- DLP-G7 Mount Multiple Shelf Assemblies in a Rack, page 1-16
- DLP-G8 Install the Air Ramp, page 1-19

Step 4 Continue with the "NTP-G3 Open and Remove the Front Door" procedure on page 1-20.

Stop. You have completed this procedure.

DLP-G3 Reverse the Mounting Bracket to Fit a 19-inch (482.6-mm) Rack (ANSI Only)

Purpose	This task installs the mounting bracket to convert a 23-inch (584.2 mm) rack to a 19-inch (482.6-mm) rack. This task applies to ONS 15454 ANSI shelves only.
Tools/Equipment	#2 Phillips screwdriver Medium slot-head screwdriver Small slot-head screwdriver
Prerequisite Procedures	None
Required/As Needed	As needed
Onsite/Remote	Onsite
Security Level	None

Caution Use only the fastening hardware provided with the ONS 15454 ANSI to prevent loosening, deterioration, and electromechanical corrosion of the hardware and joined material.

Caution When mounting the ONS 15454 in a frame with a nonconductive coating (such as paint, lacquer, or enamel) either use the thread-forming screws provided with the ONS 15454 ANSI ship kit, or remove the coating from the threads to ensure electrical continuity.

Step 1 Remove the screws that attach the mounting bracket to the side of the shelf assembly.

Step 2 Flip the detached mounting bracket upside down.

Text imprinted on the mounting bracket will now also be upside down.

Step 3 Place the widest side of the mounting bracket flush against the shelf assembly (see Figure 1-1).

The narrow side of the mounting bracket should be towards the front of the shelf assembly. Text imprinted on the mounting bracket should be visible and upside down.

Step 4 Align the mounting bracket screw holes against the shelf assembly screw holes.

Step 5 Insert the screws that were removed in Step 1 and tighten them.

Step 6 Repeat the task for the mounting bracket on the opposite side.

Figure 1-1 Reversing the Mounting Brackets (23-inch [584.2-mm] Position to 19-inch [482.6-mm] Position)

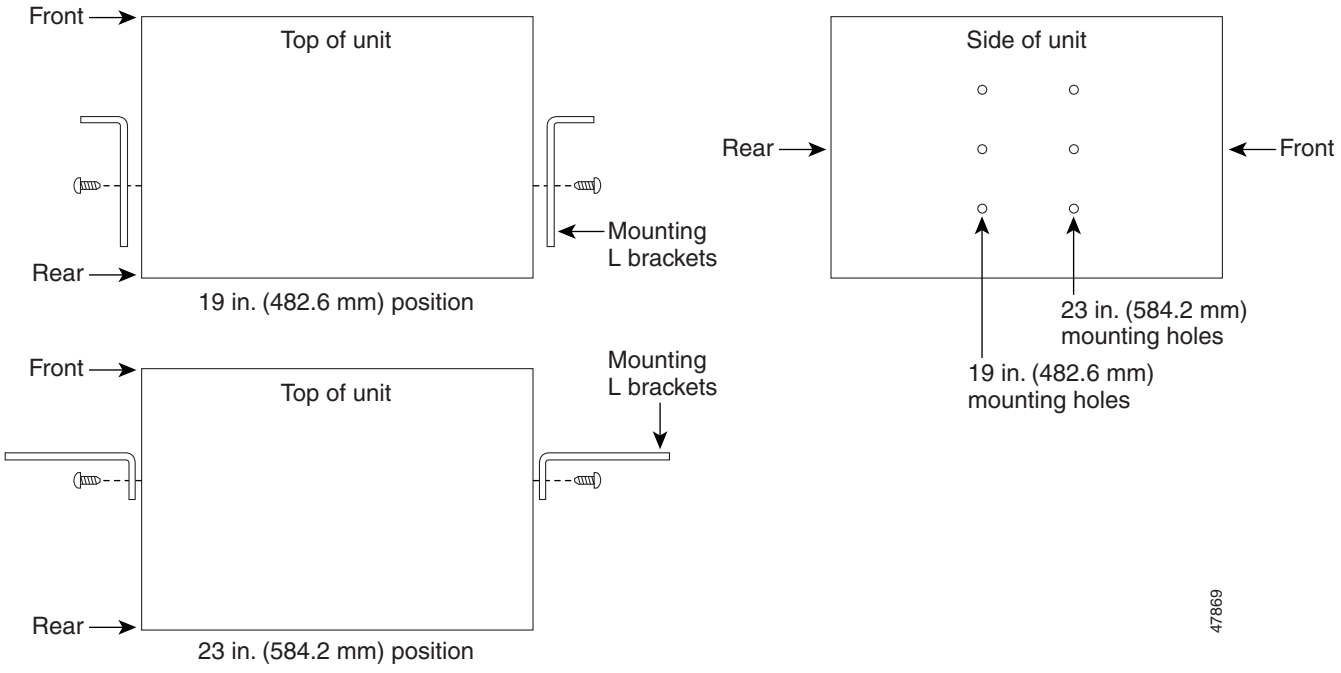

Step 7 Return to your originating procedure (NTP).

DLP-G4 Install the External Brackets and Air Filter (ANSI Only)

Purpose	This task installs the external brackets and air filter on the bottom of the shelf rather than below the fan-tray assembly. Installing the external brackets and air filter on the bottom of the shelf enables access to the air filter without removing the fan-tray assembly. This task applies to the ONS 15454 ANSI shelf only.
Tools/Equipment	#2 Phillips screwdriver Medium slot-head screwdriver Small slot-head screwdriver
Prerequisite Procedures	DLP-G3 Reverse the Mounting Bracket to Fit a 19-inch (482.6-mm) Rack (ANSI Only), page 1-10, if applicable
Required/As Needed	As needed
Onsite/Remote	Onsite
Security Level	None

Note If you choose not to install the brackets, install the air filter by sliding it into the compartment at the bottom of the shelf assembly. Each time you remove and reinstall the air filter in the future, you must first remove the fan-tray assembly. Do not install an air filter in both filter locations on any shelf assembly.

Step 1 With the fan-tray assembly removed, place the ONS 15454 facedown on a flat surface.

Note Although the filter will work if it is installed with either side facing up, Cisco recommends that you install it with the metal bracing facing up to preserve the surface of the filter.

Step 2 Locate the three screw holes that run along the left and right sides of the bottom of the shelf assembly.

Step 3 Secure each bracket to the bottom of the shelf assembly using the screws (48-0003) provided in the backplane standoff kit (53-0795-XX).

Each bracket has a filter stopper and a flange on one end. Make sure to attach the brackets with the stoppers and flanges facing the rear of the shelf assembly (the top, if the ONS 15454 is facedown during installation).

Figure 1-2 illustrates bottom bracket installation. If you do not use the brackets, in the future you must remove the fan-tray assembly before removing the air filter. The brackets enable you to clean and replace the air filter without removing the fan-tray assembly.

Figure 1-2 Installing the External Brackets

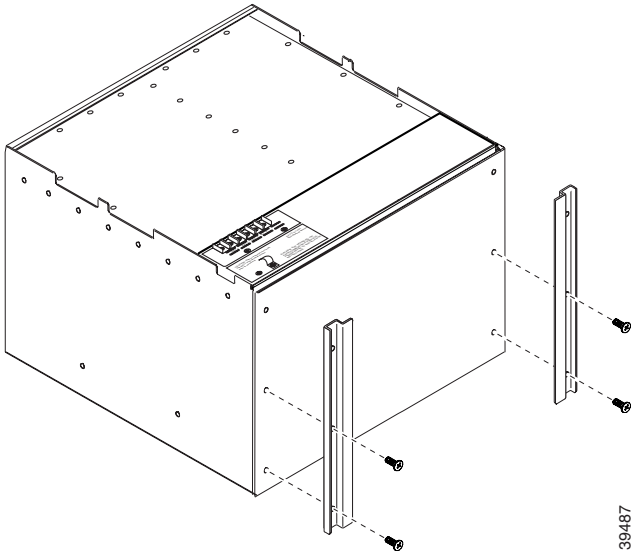

Step 4 Slide the air filter into the shelf assembly.

Step 5 Return to your originating procedure (NTP).

DLP-G5 Mount the Shelf Assembly in a Rack (One Person)

Purpose	This task allows one person to mount the shelf assembly in a rack.
Tools/Equipment	Pinned hex tool # 2 Phillips screwdriver ETSI only: Two M6 x 20 socket set screws Eight M6 x 20 pan-head Phillips mounting screws ANSI only: Two #12-24 x 3/4 set screws (48-1003-XX) Eight #12-24 x 3/4 pan-head Phillips mounting screws (48-1004-XX, 48-1007-XX)
Prerequisite Procedures	NTP-G1 Unpack and Inspect the Shelf Assembly, page 1-6
Required/As Needed	As needed
Onsite/Remote	Onsite
Security Level	None

Note The ONS 15454 ETSI requires 616.5 mm (24.24 inch) minimum of vertical rack space and 25 mm (1 inch) below the installed shelf assembly to allow air flow to the fan intake. If a second ONS 15454 ETSI is installed above a shelf assembly, the air ramp between the shelves provides space for air flow. To ensure that the mounting is secure, use two to four M6 mounting screws for each side of the shelf assembly. A shelf assembly should be mounted at the bottom of the rack if it is the only unit in the rack.

Step 1 Verify that the proper fuse and alarm panel has been installed in the top mounting space. If a fuse and alarm panel is not present, you must install one according to manufacturer's instructions:

- (ETSI only) Verify that a 100-A fuse panel (30-A fuse per shelf minimum) is installed.
- (ANSI only) If you are installing the 15454-SA-ANSI or 15454-SA-HD shelf assembly, a 100-A fuse panel (30-A fuse per shelf minimum) is required.
- (ANSI only) If you are installing the 15454-SA-NEBS3 shelf assembly, a standard 80-A fuse panel (20-A fuse per shelf minimum) is required.

Step 2 Ensure that the shelf assembly is set for the desired rack size (either 23 inches [584.2 mm] or 19 inches [482.6 mm]).

Figure 1-3 shows the rack-mounting position for the ONS 15454 ETSI.

Figure 1-3 Mounting an ONS 15454 ETSI in a Rack

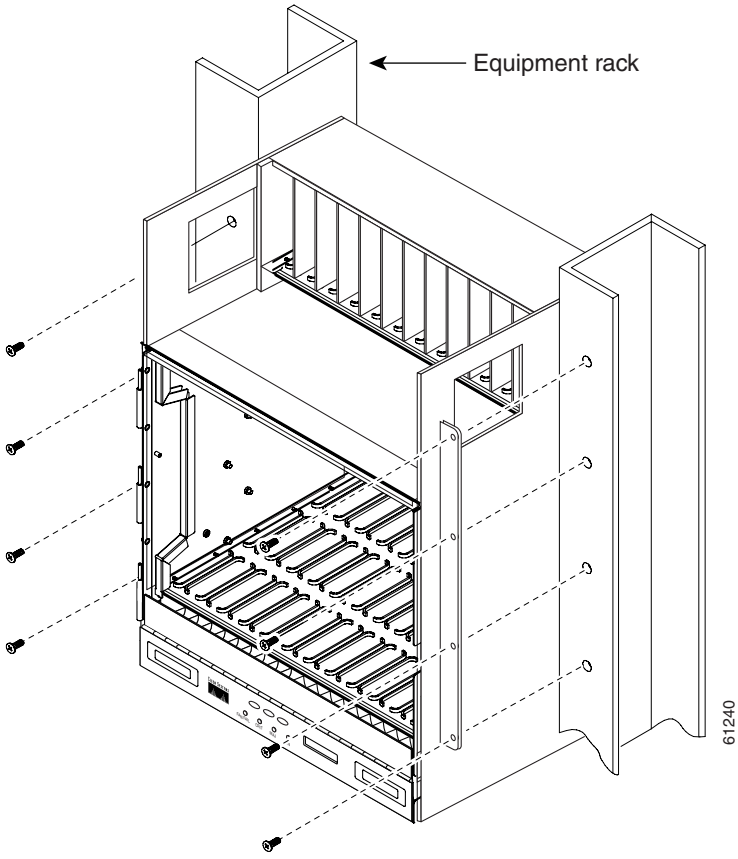

Step 3 Using the hex tool that shipped with the assembly, install the two temporary set screws into the holes that will not be used to mount the shelf. Let the set screws protrude sufficiently to hold the mounting brackets.

Step 4 Lift the shelf assembly to the desired position in the rack and set it on the screws.

Step 5 Align the screw holes on the mounting brackets with the mounting holes in the rack.

Step 6 Using the Phillips screwdriver, install one mounting screw in each side of the assembly.

Step 7 When the shelf assembly is secured to the rack, install the remaining mounting screws.

Note Use at least one set of the horizontal screw slots on the shelf assembly to prevent slippage.

Step 8 Using the hex tool, remove the temporary set screws.

Step 9 Return to your originating procedure (NTP).

DLP-G6 Mount the Shelf Assembly in a Rack (Two People)

Purpose	This task allows two people to mount the shelf assembly in a rack.
Tools/Equipment	Pinned hex tool # 2 Phillips screwdriver ETSI only: Two M6 x 20 socket set screws Eight M6 x 20 pan-head Phillips mounting screws ANSI only: Two #12-24 x 3/4 set screws (48-1003-XX) Eight #12-24 x 3/4 pan-head Phillips mounting screws (48-1004-XX, 48-1007-XX)
Prerequisite Procedures	NTP-G1 Unpack and Inspect the Shelf Assembly, page 1-6
Required/As Needed	As needed
Onsite/Remote	Onsite
Security Level	None

Note The ONS 15454 ETSI requires 616.5 mm (24.24 inch) minimum of vertical rack space and 25 mm (1 inch) below the installed shelf assembly to allow air flow to the fan intake. If a second ONS 15454 ETSI is installed above a shelf assembly, the air ramp between the shelves provides space for air flow. To ensure that the mounting is secure, use two to four M6 mounting screws for each side of the shelf assembly. A shelf assembly should be mounted at the bottom of the rack if it is the only unit in the rack.

Note The ONS 15454 ANSI must have one inch (25.4 mm) of airspace below the installed shelf assembly to allow air flow to the fan intake. If a second ONS 15454 is installed underneath a shelf assembly, the air ramp on top of the bottom shelf assembly provides the desired space. However, if the ONS 15454 is installed above third-party equipment, you must provide a minimum spacing of one inch (25.4 mm) between the third-party shelf assembly and the bottom of the ONS 15454. The third-party equipment must not vent heat upward into the ONS 15454.

Step 1 Verify that the proper fuse and alarm panel has been installed in the top mounting space. If a fuse and alarm panel is not present, you must install one according to manufacturer's instructions:

- (ETSI only.) Verify that a 100-A fuse panel (30-A fuse per shelf minimum) is installed.
- (ANSI only.) If you are installing the 15454-SA-ANSI or 15454-SA-HD shelf assembly, a 100-A fuse panel (30-A fuse per shelf minimum) is required.
- (ANSI only.) If you are installing the 15454-SA-NEBS3 shelf assembly, a standard 80-A fuse panel (20-A fuse per shelf minimum) is required.

Step 2 Ensure that the shelf assembly is set for the desired rack size (either 23 inches [584.2 mm] or 19 inches [482.6 mm]).

Step 3 Using the hex tool that shipped with the assembly, install the two set screws into the holes that will not be used to mount the shelf. Let the set screws protrude sufficiently to hold the mounting brackets.

Step 4 Lift the shelf assembly to the desired position in the rack.

Step 5 Align the screw holes on the mounting brackets with the mounting holes in the rack.

Step 6 Have one person hold the shelf assembly in place while the other person uses the Phillips screwdriver to install one mounting screw in each side of the assembly.

Step 7 When the shelf assembly is secured to the rack, install the remaining mounting screws.

Note Use at least one set of the horizontal screw slots on the shelf assembly to prevent slippage.

Step 8 Use the hex tool to remove the temporary set screws.

Step 9 Return to your originating procedure (NTP).

DLP-G7 Mount Multiple Shelf Assemblies in a Rack

Purpose	This task installs multiple shelves in a rack.
Tools/Equipment	Pinned hex tool #2 Phillips screwdriver ETSI only: Two M6 x 20 socket set screws (per shelf) Eight M6 x 20 pan-head Phillips mounting screws (per shelf) ANSI only: Two #12-24 x 3/4 set screws (48-1003-XX) (per shelf) Eight #12-24 x 3/4 pan-head Phillips mounting screws (48-1004-XX, 48-1007-XX) (per shelf)
Prerequisite Procedures	NTP-G1 Unpack and Inspect the Shelf Assembly, page 1-6
Required/As Needed	As needed
Onsite/Remote	Onsite
Security Level	None

Note A standard ETSI rack can hold three ONS 15454 ETSI shelf assemblies and two air ramps. When mounting a shelf assembly in a partially filled rack, load the rack from the bottom to the top with the heaviest component at the bottom of the rack. If the rack is provided with stabilizing devices, install the stabilizers before mounting or servicing the unit in the rack.

Note The ONS 15454 ETSI requires 616.5 mm (24.24 inch) minimum of vertical rack space and 25 mm (1 inch) below the installed shelf assembly to allow air flow to the fan intake. If a second ONS 15454 ETSI is installed above a shelf assembly, the air ramp between the shelves provides space for air flow. When using third-party equipment above the ONS 15454 ETSI, provide a minimum of 25 mm (1 inch) between the third-party unit and the bottom of the ONS 15454 ETSI. The third-party equipment must not vent heat upward into the ONS 15454 ETSI.

Note The ONS 15454 ANSI must have one inch (25.4 mm) of airspace below the installed shelf assembly to allow air flow to the fan intake. If a second ONS 15454 is installed underneath a shelf assembly, the air ramp on top of the bottom shelf assembly provides the desired space. However, if the ONS 15454 is installed above third-party equipment, you must provide a minimum spacing of one inch (25.4 mm) between the third-party shelf assembly and the bottom of the ONS 15454. The third-party equipment must not vent heat upward into the ONS 15454.

Step 1 Verify that the proper fuse and alarm panel has been installed in the top mounting space. If a fuse and alarm panel is not present, you must install one according to manufacturer's instructions:

- (ETSI only.) Verify that a 100-A fuse panel (30-A fuse per shelf minimum) is installed.
- (ANSI only.) If you are installing the 15454-SA-ANSI or 15454-SA-HD shelf assembly, a 100-A fuse panel (30-A fuse per shelf minimum) is required.
- (ANSI only.) If you are installing the 15454-SA-NEBS3 shelf assembly, a standard 80-A fuse panel (20-A fuse per shelf minimum) is required.

Step 2 Mount the first shelf assembly in the bottom of the rack using the "DLP-G5 Mount the Shelf Assembly in a Rack (One Person)" task on page 1-13 or the "DLP-G6 Mount the Shelf Assembly in a Rack (Two People)" task on page 1-15.

Figure 1-4 shows a three-shelf ONS 15454 ETSI bay assembly.

Figure 1-4 Three-Shelf ONS 15454 ETSI (15454 SDH) Bay Assembly

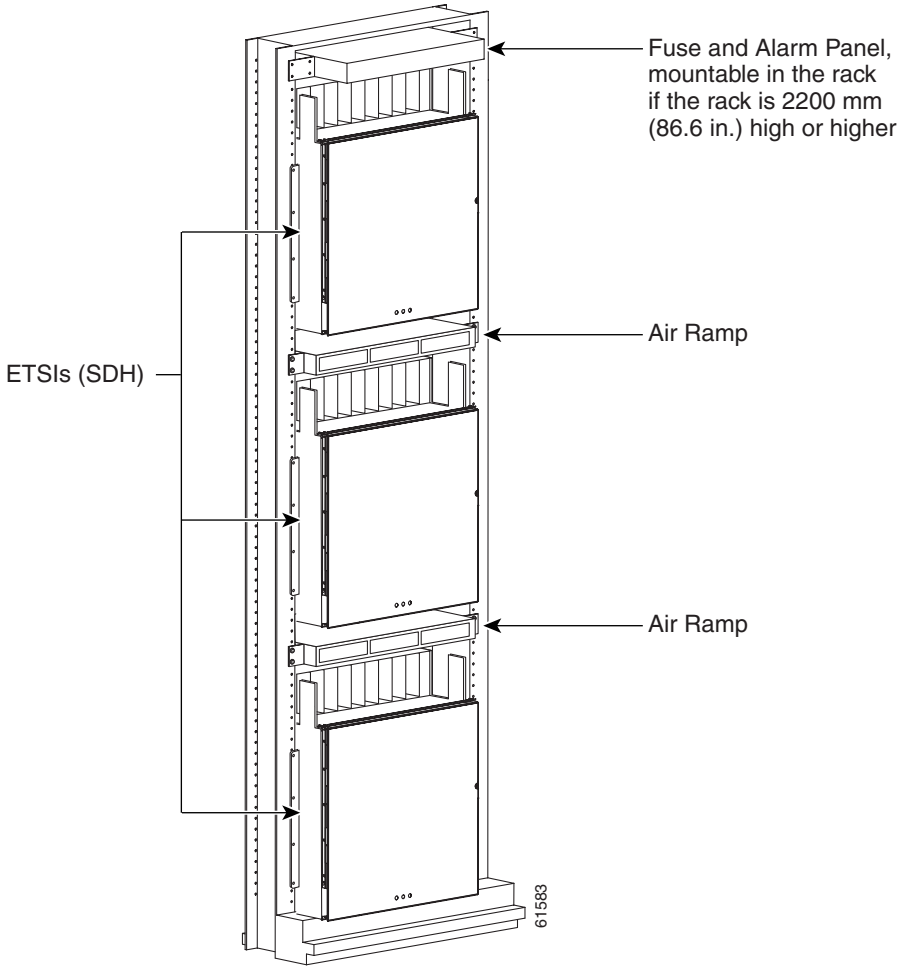

Step 3 (ETSI only.) Mount the air ramp above the ONS 15454 ETSI.

The air ramp is needed if you install more than one ONS 15454 ETSI shelf in a rack. To ensure that the air ramp is secure, use one or two M6 mounting screws for each side of the shelf assembly. Figure 1-5 shows how to mount an air ramp in the rack.

Figure 1-5 Mounting the Air Ramp in a Rack

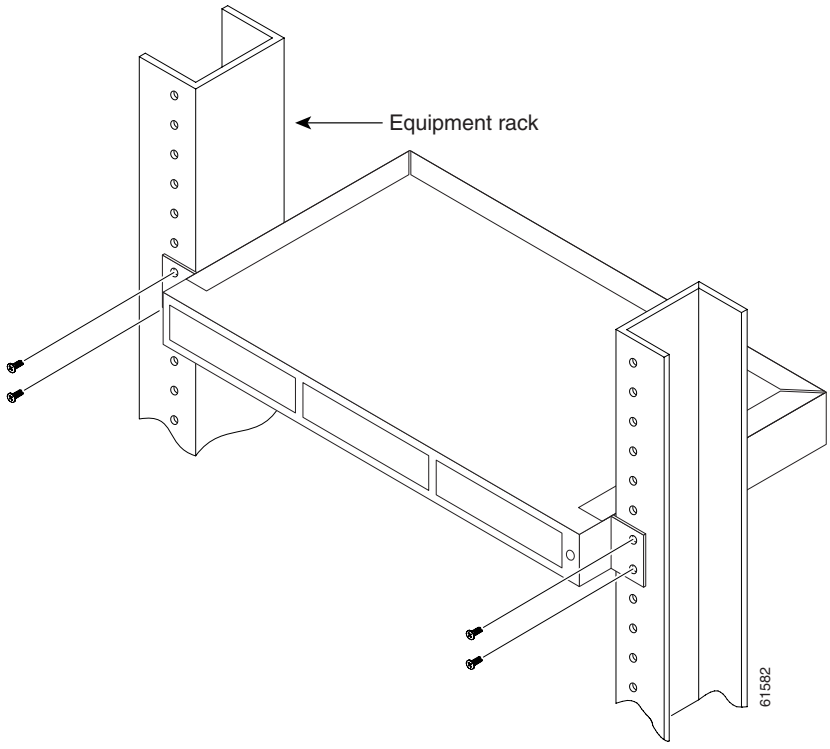

Step 4 Repeat this task for every shelf assembly you need to install.

Step 5 Return to your originating procedure (NTP).

DLP-G8 Install the Air Ramp

Purpose	Use this task to install the air ramp.
Tools/Equipment	#2 Phillips screwdriver
Prerequisite Procedures	None
Required/As Needed	As needed
Onsite/Remote	Onsite
Security Level	None

Step 1 The air ramp requires 1 RU in a standard 19-inch (482.6-mm) or 23-inch (584.2-mm) rack. Locate the RMU space specified in your site plan.See the "13.5 Typical DWDM Rack Layouts" section on page 13-16 for more information about air ramp placement.

Step 2 Verify that the mounting brackets attached to the unit are correct for your rack size. Complete "DLP-G3 Reverse the Mounting Bracket to Fit a 19-inch (482.6-mm) Rack (ANSI Only)" task on page 1-10 as required.

Step 3 Align the chassis with the rack mounting screw holes; insert and tighten the four screws.

Step 4 Return to your originating procedure (NTP).

NTP-G3 Open and Remove the Front Door

Purpose	This procedure opens and removes the front door to access the equipment.
Tools/Equipment	Open-end wrench Pinned hex (Allen) key
Prerequisite Procedures	NTP-G2 Install the Shelf Assembly, page 1-8
Required/As Needed	Required
Onsite/Remote	Onsite
Security Level	None

Step 1 Complete the "DLP-G9 Open the Front Cabinet Compartment (Door)" task on page 1-20.

Step 2 Complete the "DLP-G10 Remove the Front Door" task on page 1-21.

Step 3 If you are using an ETSI shelf, continue with the "NTP-G4 Open and Remove the FMEC Cover (ETSI Only)" procedure on page 1-23. If you are using an ANSI shelf, continue with the "NTP-G5 Remove the Backplane Covers (ANSI Only)" procedure on page 1-26.

Stop. You have completed this procedure.

DLP-G9 Open the Front Cabinet Compartment (Door)

Purpose	This task opens the front door.
Tools/Equipment	Pinned hex (Allen) key
Prerequisite Procedures	NTP-G2 Install the Shelf Assembly, page 1-8
Required/As Needed	Required
Onsite/Remote	Onsite
Security Level	None

Note The ONS 15454 shelf assembly has an ESD plug input and is shipped with an ESD wrist strap. The ESD plug input is located on the outside of the shelf assembly on the right side. It is labeled "ESD" on the top and bottom. Always wear an ESD wrist strap and connect the strap to the ESD plug when working on the ONS 15454.

Step 1 Open the front door lock.

The ONS 15454 shelf assembly comes with a pinned hex key for locking and unlocking the front door. Turn the key counterclockwise to unlock the door and clockwise to lock it. Figure 1-6 illustrates the front door of the ANSI shelf.

Figure 1-6 Cisco ONS 15454 ANSI Front Door

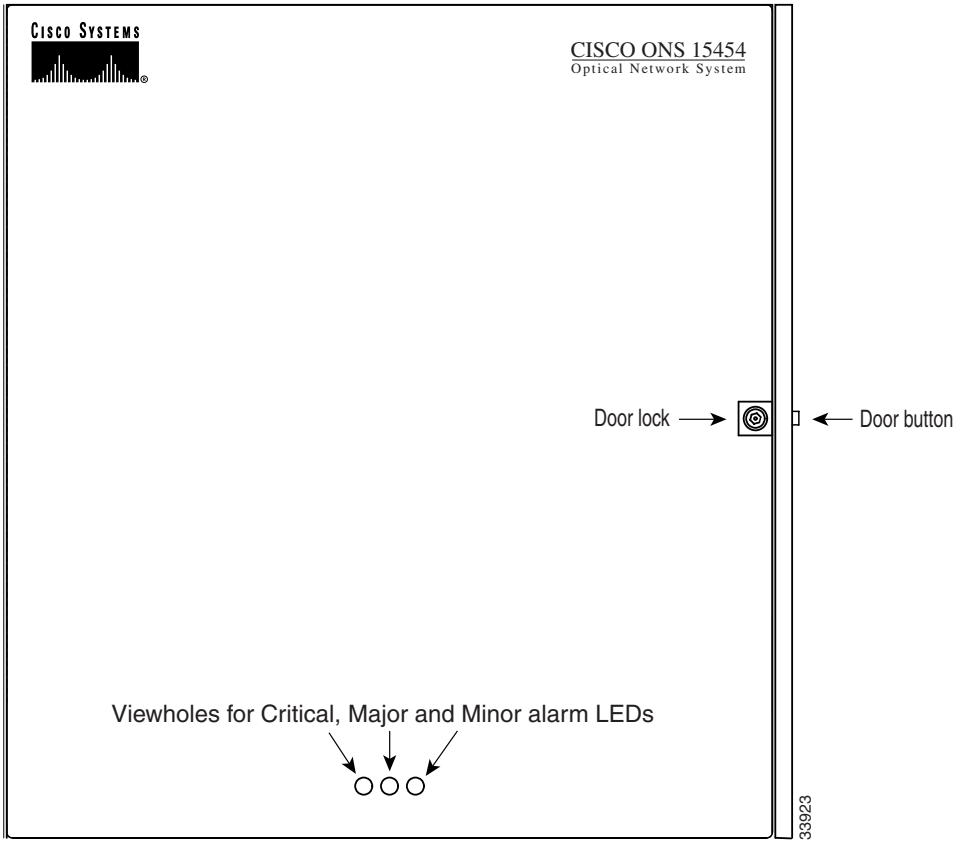

Step 2 Press the door button to release the latch. A button on the right side of the shelf assembly releases the door.

Step 3 Swing the door open.

Step 4 Return to your originating procedure (NTP).

DLP-G10 Remove the Front Door

Purpose	This task removes the front cabinet compartment door.
Tools/Equipment	Open-end wrench
Prerequisite Procedures	DLP-G9 Open the Front Cabinet Compartment (Door), page 1-20
Required/As Needed	As needed
Onsite/Remote	Onsite
Security Level	None

Step 1 For ONS 15454 ETSI shelves:

a. Unscrew the nut holding the ground wire to the shelf. Remove the nut and washer.

b. Remove the ground wire from the shelf.

c. Hold the door at the top left corner and remove the door from its hinges (Figure 1-7).

Figure 1-7 Removing the ONS 15454 ETSI Front Door

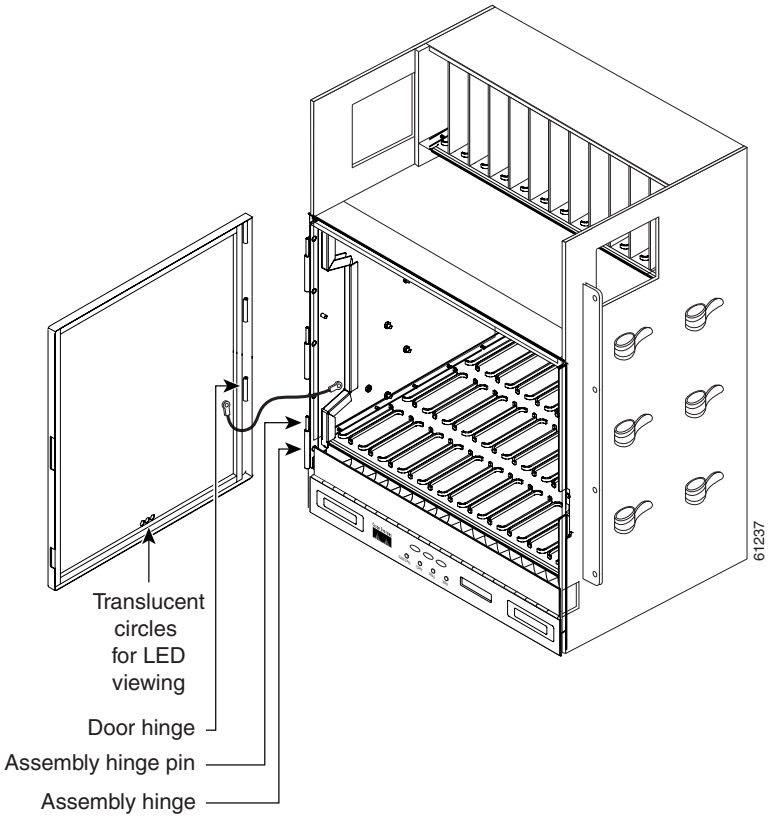

Step 2 For ONS 15454 ANSI shelves:

a. To remove the door ground strap (available in Release 3.3 and later), perform the following:

- To detach the ground strap from the front door, loosen the #6 Kepnut (49-0600-01) using the open-end wrench. Detach the end of the ground strap terminal lug (72-3622-01) from the male stud on the inside of the door.
- To detach the other end of the ground strap from the longer screw on the fiber guide, loosen the #4 Kepnut (49-0337-01) on the terminal lug using the open-end wrench. Remove the terminal lug and lock washer.

b. Lift the door from its hinges at the top left corner of the door (Figure 1-8).

Figure 1-8 Removing the ONS 15454 ANSI Front Door

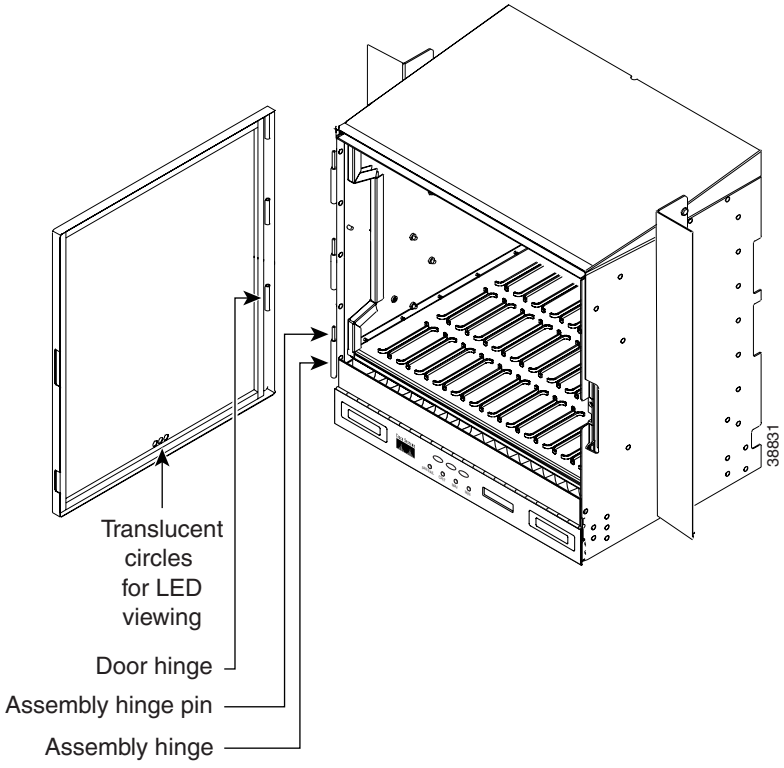

Step 3 Return to your originating procedure (NTP).

NTP-G4 Open and Remove the FMEC Cover (ETSI Only)

Purpose	This procedure opens and removes the FMEC cover on the ONS 15454 ETSI. The ONS 15454 ETSI has a screw-in panel over the EFCA. The FMEC cover protects the FMEC cards.
Tools/Equipment	Medium slot-head screwdriver
Prerequisite Procedures	NTP-G2 Install the Shelf Assembly, page 1-8
Required/As Needed	Required
Onsite/Remote	Onsite
Security Level	None

Step 1 Complete the "DLP-G11 Open the FMEC Cover" task on page 1-24.

Step 2 Complete the "DLP-G12 Remove the FMEC Cover" task on page 1-25.

Step 3 Continue with the "NTP-G6 Install the MIC-A/P and MIC-T/C/P FMECs (ETSI Only)" procedure on page 1-27.

Stop. You have completed this procedure.

DLP-G11 Open the FMEC Cover

Purpose	This task opens the FMEC cover. The FMEC cover must be opened to install the MIC-A/P and the MIC-C/T/P.
Tools/Equipment	Medium slot-head screwdriver
Prerequisite Procedures	DLP-G9 Open the Front Cabinet Compartment (Door), page 1-20
Required/As Needed	Required
Onsite/Remote	Onsite
Security Level	None

Step 1 Unscrew the screws on the FMEC cover (Figure 1-9).

Figure 1-9 Unscrewing the FMEC Cover

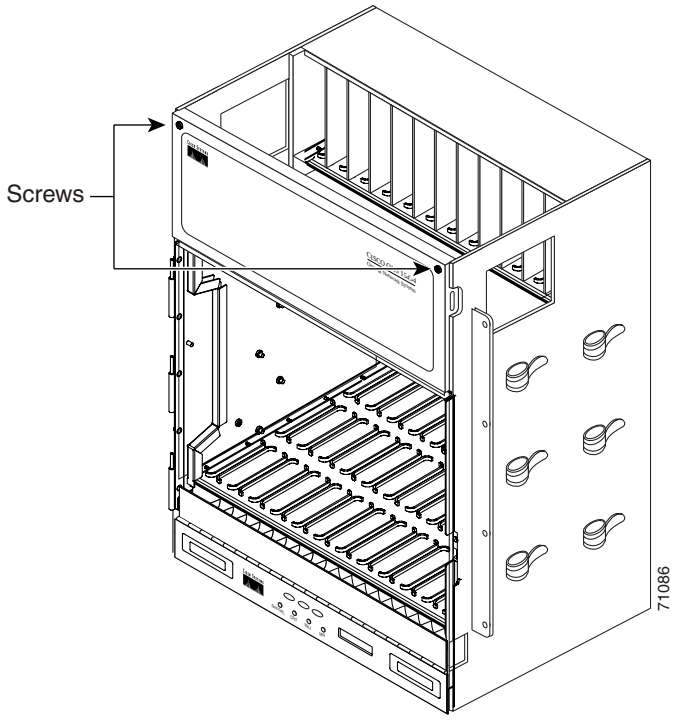

Step 2 Use the handles to pull the cover forward.

Step 3 Return to your originating procedure (NTP).

DLP-G12 Remove the FMEC Cover

Purpose	This task removes the FMEC cover in order to install the MIC-A/P and the MIC-C/T/P.
Tools/Equipment	Medium slot-head screwdriver
Prerequisite Procedures	DLP-G11 Open the FMEC Cover, page 1-24
Required/As Needed	As needed
Onsite/Remote	Onsite
Security Level	None

Step 1 Unscrew the nut holding the ground wire to the shelf. Remove the nut and washer.

Step 2 Remove the ground wire from the left side of the shelf.

Step 3 Pull the right side of the hinge-locking spring (Figure 1-10).

Figure 1-10 Removing the ONS 15454 FMEC Cover

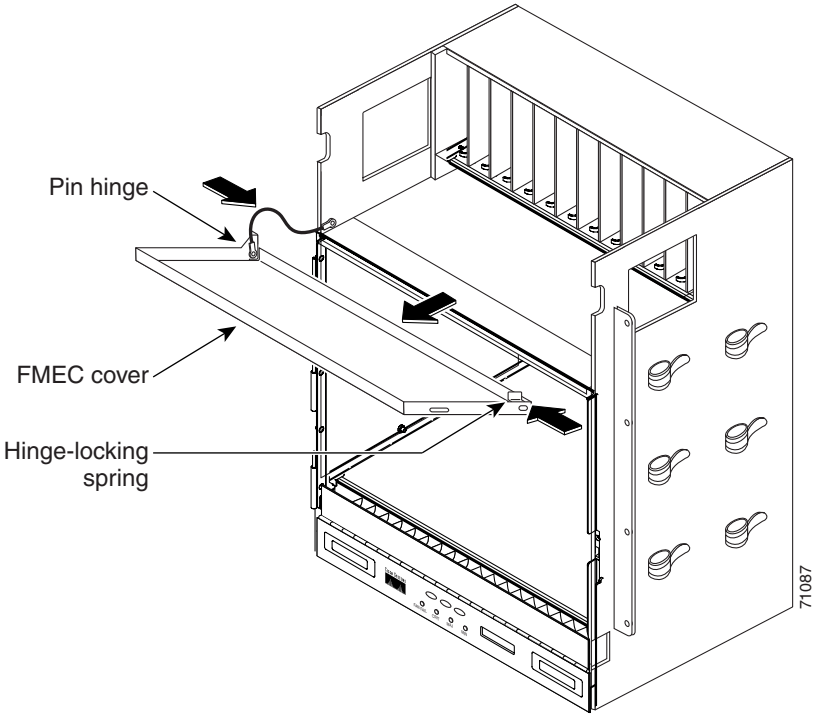

Step 4 Detach the cover from the pin of the hinge.

Step 5 Remove the cover carefully from the left pin of the hinge.

Step 6 Return to your originating procedure (NTP).

NTP-G5 Remove the Backplane Covers (ANSI Only)

Purpose	This procedure describes how to access the ONS 15454 ANSI backplane by removing the covers. The backplane has two sheet metal covers (one on either side) and a lower backplane cover at the bottom.
Tools/Equipment	#2 Phillips screwdriver Medium slot-head screwdriver Small slot-head screwdriver
Prerequisite Procedures	NTP-G2 Install the Shelf Assembly, page 1-8 NTP-G3 Open and Remove the Front Door, page 1-20
Required/As Needed	Required
Onsite/Remote	Onsite
Security Level	None

Step 1 Complete the "DLP-G13 Remove the Lower Backplane Cover" task on page 1-26.

Step 2 Complete the "DLP-G14 Remove the Backplane Sheet Metal Cover" task on page 1-27.

Step 3 Continue with the "NTP-G7 Install the Power and Ground" procedure on page 1-30.

Stop. You have completed this procedure.

DLP-G13 Remove the Lower Backplane Cover

Purpose	This task removes the lower backplane cover of the ONS 15454 ANSI shelf assembly.
Tools/Equipment	#2 Phillips screwdriver Medium slot-head screwdriver Small slot-head screwdriver
Prerequisite Procedures	None
Required/As Needed	Required
Onsite/Remote	Onsite
Security Level	None

Step 1 Unscrew the five retaining screws that hold the cover in place.

Step 2 Grasp the cover on each side.

Step 3 Gently pull the cover away from the backplane.

Step 4 Return to your originating procedure (NTP).

DLP-G14 Remove the Backplane Sheet Metal Cover

Purpose	This task removes the backplane sheet metal cover that is installed on the backplane.
Tools/Equipment	#2 Phillips screwdriver Medium slot-head screwdriver Small slot-head screwdriver
Prerequisite Procedures	DLP-G13 Remove the Lower Backplane Cover, page 1-26
Required/As Needed	Required
Onsite/Remote	Onsite
Security Level	None

Step 1 To remove the lower clear plastic backplane cover, loosen the five screws that secure it to the ONS 15454 and pull it away from the shelf assembly.

Step 2 Loosen the nine perimeter screws that hold the backplane sheet metal cover(s) in place.

Step 3 Lift the panel by the bottom to remove it from the shelf assembly.

Step 4 Store the panel for later use. Attach the backplane cover(s) whenever electrical interface assemblies (EIA[s]) are not installed.

Step 5 Return to your originating procedure (NTP).

NTP-G6 Install the MIC-A/P and MIC-T/C/P FMECs (ETSI Only)

Purpose	This procedure installs the MIC-A/P and the MIC-T/C/P, which are a type of FMEC installed in the EFCA. The EFCA is located at the top of the ONS 15454 ETSI shelf. It provides connection for installing power, external alarms, timing input and output, and craft interface terminals.This procedure applies to the ETSI shelf only.
Tools/Equipment	#2 Phillips screwdriver Medium slot-head screwdriver Small slot-head screwdriver FMEC cards (the MIC-A/P and MIC-T/C/P)
Prerequisite Procedures	NTP-G4 Open and Remove the FMEC Cover (ETSI Only), page 1-23
Required/As Needed	Required
Onsite/Remote	Onsite
Security Level	None

Caution Always use the supplied ESD wristband when working with a powered ONS 15454 ETSI. Plug the wristband cable into the ESD jack located on the lower-right outside edge of the shelf assembly.

Warning **Voltage is present on the backplane when the system is operating. To reduce risk of an electric shock, keep hands and fingers out of the power supply bays and backplane areas.**

Note The ONS 15454 ETSI EFCA has 12 FMEC slots numbered sequentially from left to right beginning with Slot 18. Slots 18 to 22 and 25 to 29 provide electrical connections for the corresponding slots, so they are unnecessary in dense wave division multiplexing (DWDM) applications.

Step 1 Ensure you are installing the FMECs in the correct slot:

- FMEC Slot 23 supports the MIC-A/P.

  The MIC-A/P card provides connection for the BATTERY B input, one of the two possible redundant power supply inputs. It also provides connection for eight alarm outputs (coming from the TCC2 card), sixteen alarm inputs, and four configurable alarm inputs/outputs.

- FMEC Slot 24 supports the MIC-C/T/P.

  The MIC-C/T/P card provides connection for the BATTERY A input, one of the two possible redundant power supply inputs. It also provides connection for system management serial port, system management LAN port, and system timing inputs and outputs.

Step 2 Hold the FMEC by the faceplate.

Step 3 Slide the FMEC along the guide rails into the desired FMEC slot or slots.

Step 4 Push the FMEC gently into the connector. The ONS 15454 ETSI FMECs plug into electrical connectors on the back panel of the shelf assembly when the screws are tightened. Figure 1-11 shows FMEC installation.

Figure 1-11 Installing FMECs on the ONS 15454 ETSI

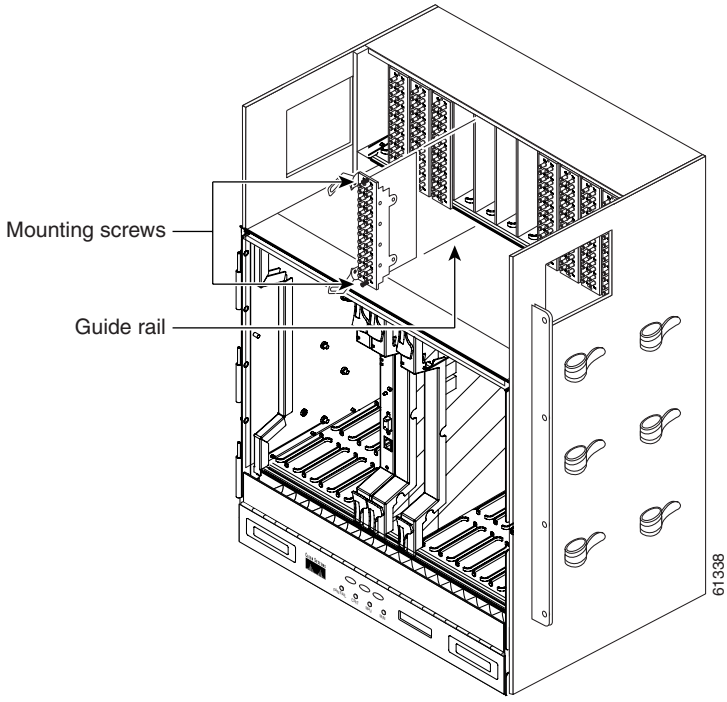

Step 5 Tighten the screws.

Step 6 Continue with the "NTP-G7 Install the Power and Ground" procedure on page 1-30.

Stop. You have completed this procedure.

NTP-G7 Install the Power and Ground

Purpose	This procedure installs power feeds and grounds the ONS 15454.
Tools/Equipment	#2 Phillips screwdriver Medium slot-head screwdriver Small slot-head screwdriver Screws (ETSI only.) Power cable (from fuse panel to MIC-A/P and to MIC-C/T/P), shipped with the ONS 15454 ETSI (ANSI only.) Power cable (from fuse and alarm panel to assembly), #10 AWG, copper conductors, 194 degrees F [90 degrees C]) Ground cable 13.3-mm² (#6 AWG) stranded (ETSI only.) Two-hole grounding lug, shipped with the ONS 15454 ETSI Listed pressure terminal connectors such as ring and fork types; connectors must be suitable for 5.26-mm² (#10 AWG) copper conductors (ANSI only.) Wire wrapper Wire cutters Wire strippers Crimp tool Fuse panel
Prerequisite Procedures	(ETSI) NTP-G4 Open and Remove the FMEC Cover (ETSI Only), page 1-23 (ETSI) NTP-G6 Install the MIC-A/P and MIC-T/C/P FMECs (ETSI Only), page 1-27 (ANSI) NTP-G5 Remove the Backplane Covers (ANSI Only), page 1-26
Required/As Needed	Required
Onsite/Remote	Onsite
Security Level	None

Warning **Shut off the power from the power source or turn off the breakers before beginning work.**

Warning **This equipment is intended to be grounded. Ensure that the host is connected to earth ground during normal use.**

Warning **Do not mix conductors of dissimilar metals in a terminal or splicing connector where physical contact occurs (such as copper and aluminum, or copper and copper-clad aluminum), unless the device is suited for the purpose and conditions of use.**

Warning **Connect the ONS 15454 only to a DC power source that complies with the safety extra-low voltage (SELV) requirements in IEC 60950-based safety standards.**

Warning **The ONS 15454 relies on the protective devices in the building installation to protect against short circuit, overcurrent, and grounding faults. Ensure that the protective devices are properly rated to protect the system, and that they comply with national and local codes.**

Warning **A readily accessible two-poled disconnect device must be incorporated in the fixed wiring.**

Warning **When installing redundant power feeds, do not use aluminum conductors.**

Warning **If you use redundant power leads to power the ONS 15454, disconnecting one lead will not remove power from the node.**

Caution Always use the supplied ESD wristband when working with a powered ONS 15454. Plug the wristband cable into the ESD jack located on the lower-right outside edge of the shelf assembly.

Step 1 Verify that the correct fuse and alarm panel is installed in the top mounting space:

- (ETSI only.) Verify that a 100-A fuse panel (30-A fuse per shelf minimum) is installed. If not, install one according to manufacturer's instructions.
- (ANSI only.) If you have the 15454-SA-ANSI or 15454-SA-HD shelf, a 100-A fuse panel (30-A fuse per shelf minimum) should be installed. If not, install one according to manufacturer's instructions.
- (ANSI only.) If you have the 15454-SA-NEBS3 shelf, a standard 80-A fuse panel (20-A fuse per shelf minimum) should be installed. If not, install one according to manufacturer's instructions.

Step 2 Depending on your type of shelf, complete the "DLP-G15 Connect the Office Ground to the ONS 15454 ETSI" task on page 1-32 or the "DLP-G16 Connect the Office Ground to the ONS 15454 ANSI" task on page 1-33.

Step 3 Depending on your shelf, complete the "DLP-G17 Connect Office Power to the ONS 15454 ETSI" task on page 1-35 or the "DLP-G18 Connect Office Power to the ONS 15454 ANSI" task on page 1-37.

Step 4 Complete the "DLP-G19 Turn On and Verify Office Power" task on page 1-39.

Step 5 Continue with the "NTP-G8 Install the Fan-Tray Assembly" procedure on page 1-40.

Stop. You have completed this procedure.

DLP-G15 Connect the Office Ground to the ONS 15454 ETSI

Purpose	This task connects ground to the ONS 15454 ETSI shelf.
Tools/Equipment	2-hole grounding lug, included in the installation kit 2 Phillips head, M6 (metric) machine screws with locking washers, included in the installation kit Grounding wire—Use 13.3-mm² (#6 AWG) copper wire. #2 Phillips screwdriver Crimping tool—This tool must be large enough to accommodate the girth of the grounding lug when you crimp the grounding cable into the lug. Wire stripping tool
Prerequisite Procedures	DLP-G9 Open the Front Cabinet Compartment (Door), page 1-20
Required/As Needed	Required
Onsite/Remote	Onsite
Security Level	None

Warning **This equipment must be grounded. Never defeat the ground conductor or operate the equipment in the absence of a suitably installed ground conductor. Contact the appropriate electrical inspection authority or an electrician if you are uncertain that suitable grounding is available.**

Step 1 Use a wire-stripping tool to remove approximately 0.75 inch (19 mm) of the covering from the end of the grounding wire.

Step 2 Insert the stripped end of the grounding wire into the open-end of the grounding lug.

Step 3 Use the crimping tool to secure the grounding wire in two different places in the grounding lug.

Step 4 Locate the grounding receptacle on the side panel of the shelf (Figure 1-12).

Step 5 Place the grounding lug against the grounding receptacle on the side panel of the shelf.

Step 6 Insert one of the screws through the locking washer and through the hole in the grounding lug. Insert the screw into the threaded holes on the right side of the shelf. Ensure that the grounding lug does not interfere with other system hardware or rack equipment.

Step 7 Repeat Step 6 with the second screw.

Step 8 Prepare the other end of the grounding wire and connect it to an appropriate grounding point in your site to ensure adequate earth ground for the shelf.

Figure 1-12 Grounding the ONS 15454 ETSI

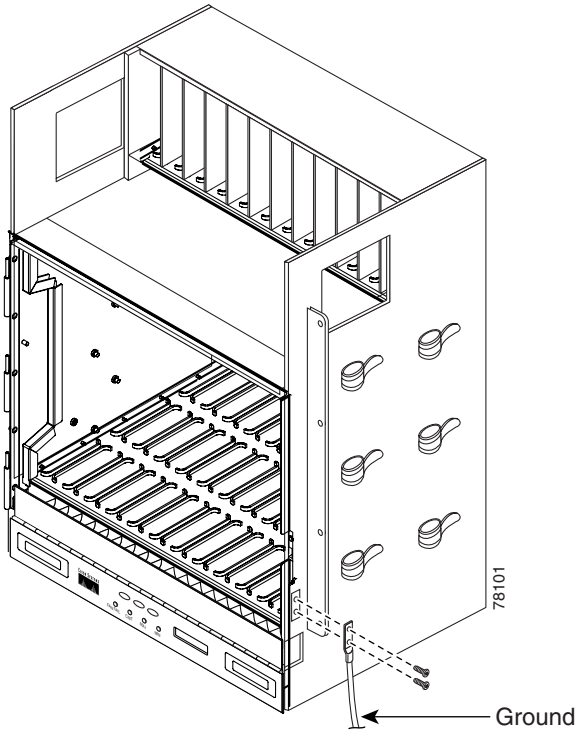

Step 9 Return to your originating procedure (NTP).

DLP-G16 Connect the Office Ground to the ONS 15454 ANSI

Purpose	This task connects ground to the ONS 15454 ANSI shelf.
Tools/Equipment	#2 Phillips screwdriver Medium slot-head screwdriver Small slot-head screwdriver Screws Power cable (from fuse and alarm panel to assembly), #10 AWG, copper conductors, 194 degrees F [90 degrees C]) Ground cable #6 AWG stranded Listed pressure terminal connectors such as ring and fork types; connectors must be suitable for #10 AWG copper conductors
Prerequisite Procedures	DLP-G13 Remove the Lower Backplane Cover, page 1-26
Required/As Needed	Required
Onsite/Remote	Onsite
Security Level	None

Step 1 Verify that the office ground cable (#6 AWG stranded) is connected to the top of the bay according to local site practice.

Step 2 Attach one end of the shelf ground cable (#10 AWG) to the right side of the backplane ground nut. See Figure 1-13 for the location of the ground on the backplane.

Note When terminating a frame ground, use the kep nut provided with the ONS 15454 and tighten it to a torque specification of 31 in-lb. The Kepnut provides a frame ground connection that minimizes the possibility of loosening caused by rotation during installation and maintenance activity. The type of prevention the kep nut provides for the frame ground connection is inherently provided by the terminal block for battery and battery return connections.

Figure 1-13 Ground Location on the Backplane

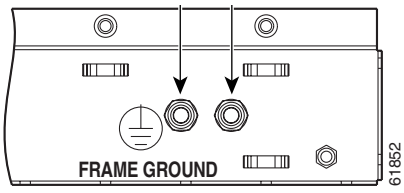

Step 3 Attach the other end of the shelf ground cable to the bay.

Step 4 Return to your originating procedure (NTP).

DLP-G17 Connect Office Power to the ONS 15454 ETSI

Purpose	This task connects power to the ONS 15454 ETSI shelf.
Tools/Equipment	#2 Phillips screwdriver Medium slot-head screwdriver Small slot-head screwdriver Wire wrapper Wire cutters Wire strippers Crimp tool Fuse panel Power cable (from fuse and alarm panel to assembly), 5.26-mm² (#10 AWG), copper conductors, 194°F [90°C]) Ground cable 13.3-mm² (#6 AWG) stranded Listed pressure terminal connectors such as ring and fork types; connectors must be suitable for 5.26-mm² (#10 AWG) copper conductors
Prerequisite Procedures	DLP-G15 Connect the Office Ground to the ONS 15454 ETSI, page 1-32
Required/As Needed	Required
Onsite/Remote	Onsite
Security Level	None

Warning **When installing or replacing the unit, the ground connection must always be made first and disconnected last.**

Caution Do not apply power to the ONS 15454 ETSI until you complete all installation steps and check the continuity of the –48 VDC battery and battery return.

Note No more than 2 m (7 ft) of the power supply cable should be exposed between the equipment and the cable-management tray.

Note Only use listed compression-type connectors when terminating the battery, battery return, and ground conductors. Connectors must be suitable for copper conductors.

Caution When terminating power, return, and frame ground, do not use soldering lug connectors, screwless (push-in) connectors, quick-connect connectors, or other friction-fit connectors.

Note If the system loses power or if both TCC2 cards are reset, you must reset the ONS 15454 ETSI clock. After powering down, the date defaults to January 1, 1970, 00:04:15. To reset the clock, see the "NTP-G24 Set Up Name, Date, Time, and Contact Information" procedure on page 3-6.

Step 1 Verify that the MIC-A/P FMEC card is installed in Slot 23 and the MIC-C/T/P FMEC card is installed in Slot 24 of the EFCA.

Step 2 Attach the connector on the end of the power cable to the power FMEC.

Step 3 Tighten the screws of the connector on the power cable.

Step 4 Connect the power cable to the fuse panel or power source. Use the pin connections in Table 1-1. The conductor (green with yellow stripes) is used for secondary grounding such as grounding to the rack.

Table 1-1 Pin Connection of the Power FMECs

Pin	Function	Cable Color
A1	Battery return	Black
A2	–48 V battery	Red
A3	Ground	Green with yellow stripes

Step 5 Return to your originating procedure (NTP).

DLP-G18 Connect Office Power to the ONS 15454 ANSI

Purpose	This task connects power to the ONS 15454 ANSI shelf.
Tools/Equipment	#2 Phillips screwdriver Medium slot-head screwdriver Small slot-head screwdriver Wire wrapper Wire cutters Wire strippers Crimp tool Fuse panel Power cable (from fuse and alarm panel to assembly), #10 AWG, copper conductors, 194 degrees F [90 degrees C]) Ground cable #6 AWG stranded Listed pressure terminal connectors such as ring and fork types; connectors must be suitable for #10 AWG copper conductors
Prerequisite Procedures	DLP-G16 Connect the Office Ground to the ONS 15454 ANSI, page 1-33
Required/As Needed	Required
Onsite/Remote	Onsite
Security Level	None

Warning **Do not apply power to the ONS 15454 until you complete all installation steps and check the continuity of the –48 VDC and return.**

Note The battery return connection is treated as DC-I, as defined in Telcordia GR-1089-CORE Issue 3.

Note If the system loses power or both TCC2 cards are reset and the system is not provisioned to get the time from a Network Time Protocol/Simple Network Time Protocol (NTP/SNTP) server, you must reset the ONS 15454 clock. After powering down, the date defaults to January 1, 1970, 00:04:15. To reset the clock, see the "NTP-G24 Set Up Name, Date, Time, and Contact Information" procedure on page 3-6. If you are using the TCC2 cards, the system clock will run for up to three hours. In this case, no action would be required.

Step 1 Connect the office power according to the fuse panel engineering specifications.

Step 2 Measure and cut the cables as needed to reach the ONS 15454 from the fuse panel. Figure 1-14 shows the ONS 15454 power terminals.

Step 3 Dress the power according to local site practice.

Warning **When installing the ONS 15454, the ground connection must always be made first and disconnected last.**

Figure 1-14 Cisco ONS 15454 Power Terminals

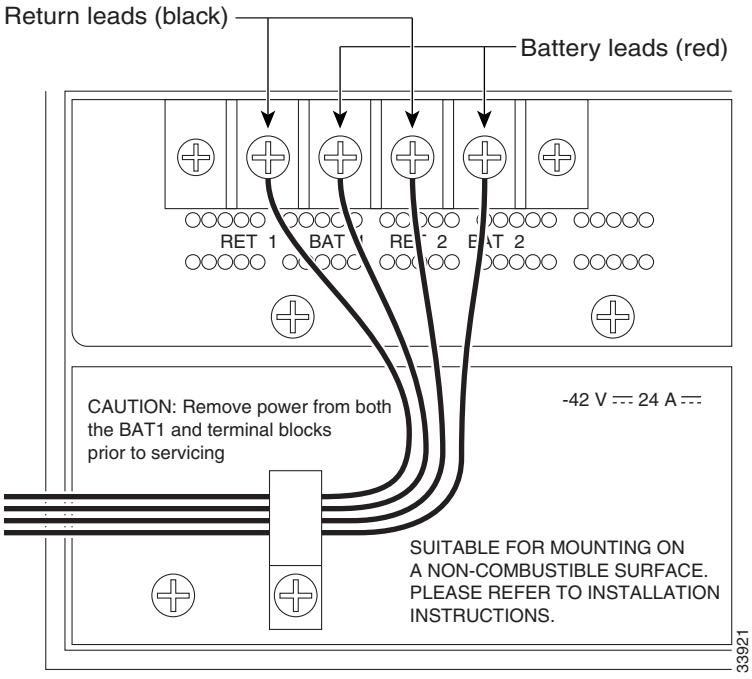

Step 4 Remove or loosen the #8 power terminal screws on the ONS 15454. To avoid confusion, label the cables connected to the BAT1/RET1 (A) power terminals as 1, and the cables connected to the BAT2/RET2 (B) power terminals as 2.

Note Use only pressure terminal connectors, such as ring and fork types, when terminating the battery, battery return, and frame ground conductors.

Caution Before you make any crimp connections, coat all bare conductors (battery, battery return, and frame ground) with an appropriate antioxidant compound. Bring all unplated connectors, braided strap, and bus bars to a bright finish, then coat with an antioxidant before you connect them. You do not need to prepare tinned, solder-plated, or silver-plated connectors and other plated connection surfaces, but always keep them clean and free of contaminants.

Caution When terminating power, return, and frame ground, do not use soldering lug, screwless (push-in) connectors, quick-connect, or other friction-fit connectors.

Step 5 Strip 1/2 inch (12.7 mm) of insulation from all power cables that you will use.

Step 6 Crimp the lugs onto the ends of all power leads.

Note When terminating battery and battery return connections as shown in Figure 1-14, follow a torque specification of 10 in-lb.

Step 7 Terminate the return 1 lead to the RET1 backplane terminal. Use oxidation-prevention grease to keep the connections noncorrosive.

Warning **Do not secure multiple connectors with the same bolt assembly.**

Step 8 Terminate the negative 1 lead to the negative BAT1 backplane power terminal. Use oxidation prevention grease to keep connections noncorrosive.

Step 9 If you use redundant power leads, terminate the return 2 lead to the positive RET2 terminal on the ONS 15454. Terminate the negative 2 lead to the negative BAT2 terminal on the ONS 15454. Use oxidation-preventative grease to keep connections noncorrosive.

Step 10 Route the cables out below the power terminals using the plastic cable clamp, as shown in Figure 1-14 on page 1-38.

Step 11 Return to your originating procedure (NTP).

DLP-G19 Turn On and Verify Office Power

Purpose	This task measures the power to verify correct power and returns for the ONS 15454 shelf.
Tools/Equipment	Voltmeter
Prerequisite Procedures	DLP-G15 Connect the Office Ground to the ONS 15454 ETSI, page 1-32 DLP-G17 Connect Office Power to the ONS 15454 ETSI, page 1-35 DLP-G16 Connect the Office Ground to the ONS 15454 ANSI, page 1-33 DLP-G18 Connect Office Power to the ONS 15454 ANSI, page 1-37
Required/As Needed	Required
Onsite/Remote	Onsite
Security Level	None

Caution Do not apply power to the shelf assembly until you complete all installation steps.

Step 1 Using a voltmeter, verify the office battery and ground at the following points on the fuse and alarm panel:

a. To verify the power, place the black test lead of the voltmeter to the frame ground. Place the red test lead on the A-side connection and verify that it is between –40.5 VDC and –57 VDC. Place the red test lead on the B-side connection and verify that it is between –40.5 VDC and –57 VDC.

Note The voltages –40.5 VDC and –57 VDC are, respectively, the minimum and maximum voltages required to power the chassis.

b. To verify the ground, place the black test lead of the voltmeter to the frame ground. Place the red test lead on the A-side return ground and verify that no voltage is present. Place the red test lead on the B-side return ground and verify that no voltage is present.

Step 2 Complete one of the following to power up the node:

- If you are using a 80-A fuse panel, insert a 20-A fuse into the fuse position according to site practice.
- If you are using a 100-A fuse panel, insert a 30-A fuse into the fuse position according to site practice.

Step 3 Using a voltmeter, verify the shelf for –48 VDC battery and ground:

a. To verify the A-side of the shelf, place the black lead of the voltmeter to the frame ground. Place the red test lead to the BAT1 (A-side battery connection) red cable. Verify that it reads between –40.5 VDC and –57 VDC. Then place the red test lead of the voltmeter to the RET1 (A-side return ground) black cable and verify that no voltage is present.

Note The voltages –40.5 VDC and –57 VDC are, respectively, the minimum and maximum voltages required to power the chassis.

b. To verify the B-side of the shelf, place the black test lead of the voltmeter to the frame ground. Place the red test lead to the BAT2 (B-side battery connection) red cable. Verify that it reads between –40.5 VDC and –57 VDC. Then place the red test lead of the voltmeter to the RET2 (B-side return ground) black cable and verify that no voltage is present.

Step 4 Return to your originating procedure (NTP).

NTP-G8 Install the Fan-Tray Assembly

Purpose	This procedure installs the fan-tray assembly.
Tools/Equipment	#2 Phillips screwdriver Medium slot-head screwdriver Small slot-head screwdriver
Prerequisite Procedures	NTP-G3 Open and Remove the Front Door, page 1-20 NTP-G7 Install the Power and Ground, page 1-30
Required/As Needed	Required
Onsite/Remote	Onsite
Security Level	None

Caution Do not operate an ONS 15454 without a fan-tray air filter. A fan-tray air filter is mandatory, except for ONS 15454 ANSI applications in an outside plant cabinet.

Note Error messages appear on the TCC2 card, the fan-tray LED, and in Cisco Transport Controller (CTC) when the fan-tray assembly is removed from the shelf or when one fan is not working.

Note If you are installing the ONS 15454 in an outside plant cabinet, remove the air filter to provide maximum cooling capabilities and to comply with Telcordia GR-487-CORE.

Caution The 15454-FTA3 fan-tray assembly can only be installed in ONS 15454 ANSI Release 3.1 or later shelf assemblies (15454-SA-ANSI, 800-19857; 15454-SA-HD, 800-24848). It includes a pin that does not allow it to be installed in ONS 15454 shelf assemblies released earlier than ONS 15454 Release 3.1 (15454-SA-NEBS3E, 15454-SA-NEBS3, and 15454-SA-R1). Installing the 15454-FTA3 in a noncompliant shelf assembly might result in failure of the alarm interface panel (AIP), which in turn, will result in power loss to the fan-tray assembly.

Caution You must place the edge of the air filter flush against the front of the fan-tray assembly compartment when installing the fan tray on top of the filter. Failure to do so could result in damage to the filter, the fan tray, or both.

Caution Do not force a fan-tray assembly into place. Doing so can damage the connectors on the fan tray and/or the connectors on the back panel of the shelf assembly.

Note To install the fan-tray assembly, it is not necessary to move any of the cable-management facilities.

Step 1 Install the air filter. The air filter can be installed internally between the fan tray and shelf assembly, or externally by mounting the air filter bracket on the bottom of the shelf assembly. Slide the air filter into the bracket.

Step 2 Install the fan-tray assembly.

- For the ONS 15454 ETSI shelf, press and hold the locks on the outer edges as you slide the fan-tray assembly into the shelf assembly.
- For the ONS 15454 ANSI shelf, slide the fan-tray assembly into the shelf.

The electrical plug at the rear of the tray should plug into the corresponding receptacle on the assembly.

Caution Do not force a fan-tray assembly into place. This can damage the connectors on the fan-tray assembly and/or the connectors on the back panel of the shelf assembly.

Step 3 To verify that the tray has plugged into the assembly, look at the fan tray and listen to determine that the fans are running. Figure 1-15 shows the fan-tray assembly location on the ONS 15454 ETSI. Figure 1-16 shows the fan-tray assembly location on the ONS 15454 ANSI.

Figure 1-15 Installing the Fan-Tray Assembly on the ONS 15454 ETSI

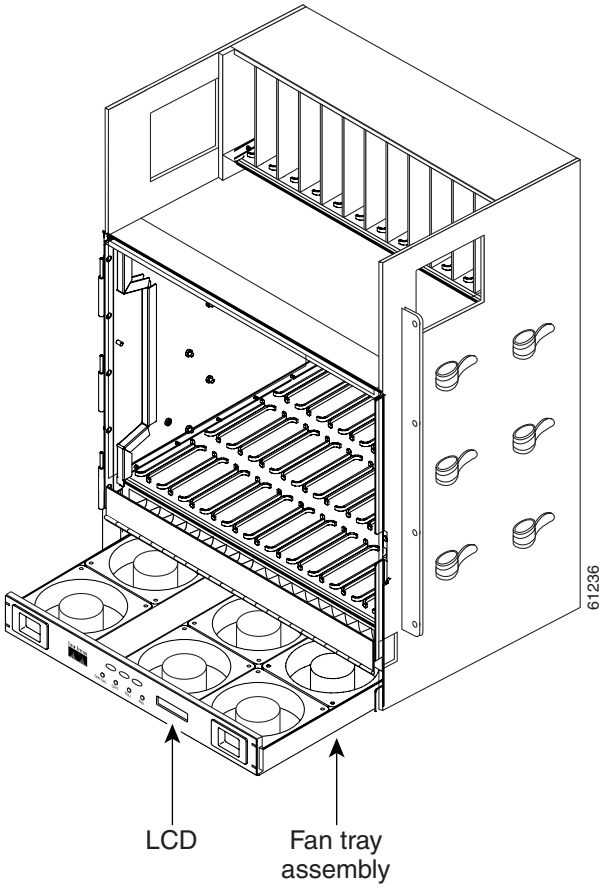

Figure 1-16 Installing the Fan-Tray Assembly on the ONS 15454 ANSI

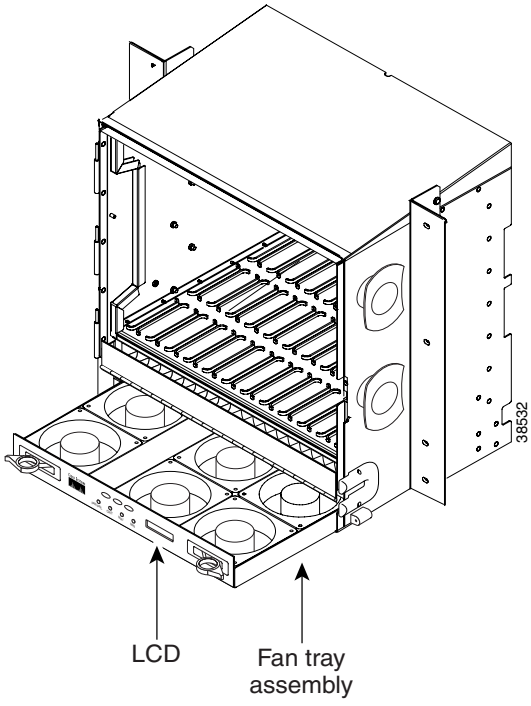

Step 4 If you want to install an alarm expansion panel on the ONS 15454 ANSI shelf, continue with the "NTP-G9 Install the Alarm Expansion Panel (ANSI Only)" procedure on page 1-44. Otherwise, continue with the "NTP-G10 Attach Wires to Alarm, Timing, LAN, and Craft Pin Connections" procedure on page 1-47.

Stop. You have completed this procedure.

NTP-G9 Install the Alarm Expansion Panel (ANSI Only)

Purpose	This procedure installs an AEP onto the 15454-SA-ANSI or 15454-SA-HD shelf backplane. The AEP provides alarm contacts (32 inputs, 16 outputs) in addition to the 16 provided by the AIC-I card. Typically, the AEP is preinstalled when ordered with the ONS 15454; however, the AEP can be ordered separately. The AIC-I card must be installed before you can provision the alarm contacts enabled by the AEP.
Tools/Equipment	#2 Phillips screwdriver Medium slot-head screwdriver Small slot-head screwdriver Wire wrapper 6-pair #29 AWG double-shielded cable Standoffs (4)
Prerequisite Procedures	DLP-G13 Remove the Lower Backplane Cover, page 1-26
Required/As Needed	As needed
Onsite/Remote	Onsite
Security Level	None

Note The AIC-I card provides direct alarm contacts (external alarm inputs and external control outputs). In the ANSI shelf, these AIC-I alarm contacts are routed through the backplane to wire-wrap pins accessible from the back of the shelf. When you install an AEP, the direct AIC-I alarm contacts cannot be used. Only the AEP alarm contacts can be used.

Step 1 Remove the two backplane screws. Replace the two screws with standoffs. Insert the longer standoff on the left, and the shorter standoff on the right (Figure 1-17).

Figure 1-17 Replace Backplane Screws with Standoffs

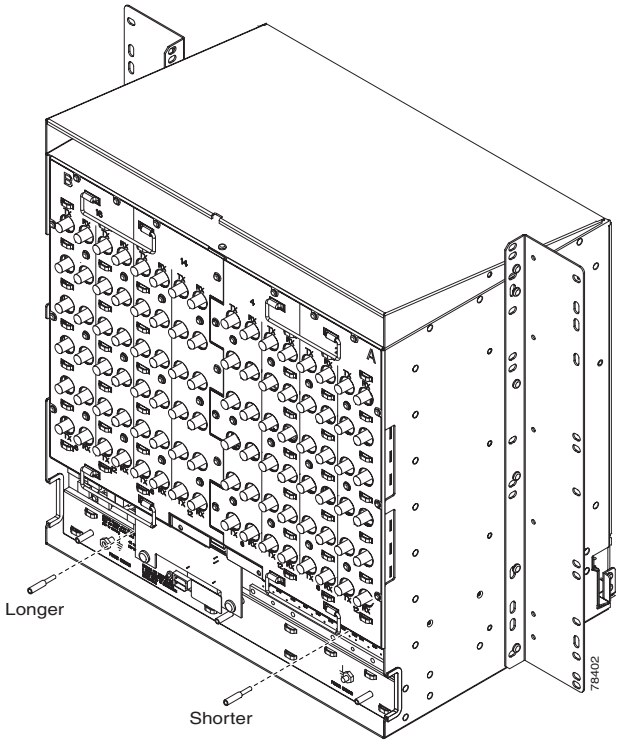

Step 2 Attach the remaining two standoffs on either side of the backplane (Figure 1-18).

Step 3 Position the AEP board over the standoffs.

Figure 1-18 Installing Standoffs and the AEP

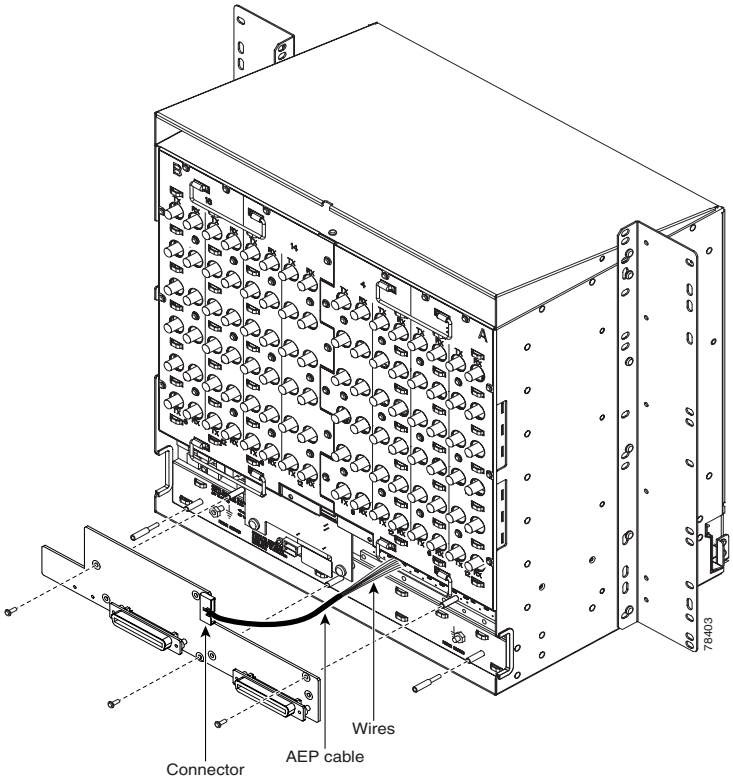

Step 4 Insert and tighten three screws to secure the AEP to the backplane.

Step 5 Connect the AEP cable to the backplane and AEP:

a. Connect the 10 colored wires to the wire-wrap pins on the backplane. Figure 1-19 shows where the cable wires are connected. Table 1-2 shows AEP and AIC-I signals that each wire carries

b. Plug the other end of the AEP cable into AEP connector port. The brown pin is on the top.

Figure 1-19 AEP Wire-Wrap Connections to Backplane Pins

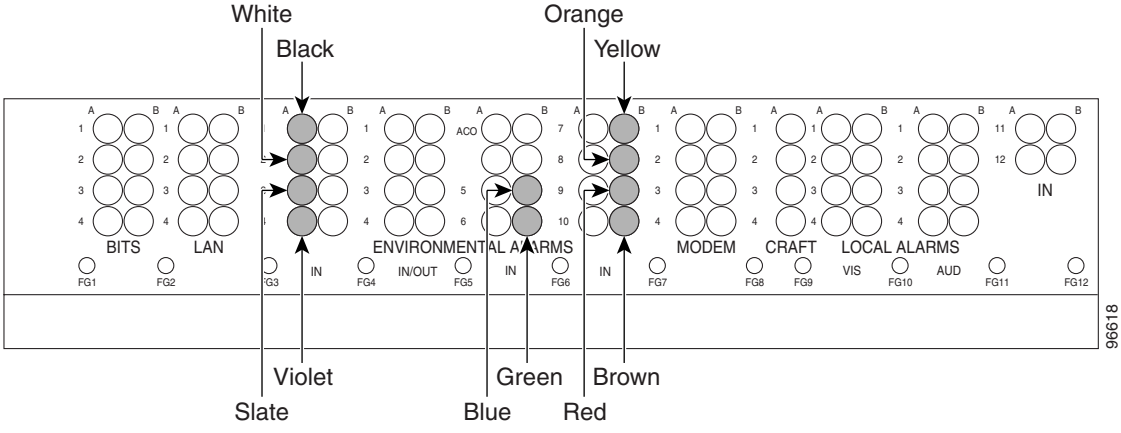

Table 1-2 Pin Assignments for the AEP

AEP Cable Wire	Backplane Pin	AIC-I Signal	AEP Signal
Black	A1	GND	AEP_GND
White	A2	AE_+5	AEP_+5
Slate	A3	VBAT–	VBAT–
Violet	A4	VB+	VB+
Blue	A5	AE_CLK_P	AE_CLK_P
Green	A6	AE_CLK_N	AE_CLK_N
Yellow	A7	AE_DIN_P	AE_DOUT_P
Orange	A8	AE_DIN_N	AE_DOUT_N
Red	A9	AE_DOUT_P	AE_DIN_P
Brown	A10	AE_DOUT_N	AE_DIN_N

Step 6 Continue with the "NTP-G10 Attach Wires to Alarm, Timing, LAN, and Craft Pin Connections" procedure on page 1-47.

Stop. You have completed this procedure.

NTP-G10 Attach Wires to Alarm, Timing, LAN, and Craft Pin Connections

Purpose	This procedure installs alarm, timing, LAN, and craft wires on the ONS 15454 shelf. These wires are attached to the MIC FMECs on the ETSI shelf and attached to the backplane on the ANSI shelf.
Tools/Equipment	Connectors according to function Twisted 0.51 mm² or 0.64 mm² (#22 or #24 AWG) shielded wires for LAN or craft 75-ohm coaxial cable with 1.0/2.3 miniature coax connector 0.51 mm² or 0.64 mm² (#22 or #24 AWG) alarm wires
Prerequisite Procedures	(ETSI only.) NTP-G6 Install the MIC-A/P and MIC-T/C/P FMECs (ETSI Only), page 1-27 (ANSI only.) NTP-G5 Remove the Backplane Covers (ANSI Only), page 1-26
Required/As Needed	As needed
Onsite/Remote	Onsite
Security Level	None

Caution Always use the supplied ESD wristband when working with a powered ONS 15454 ETSI. Plug the wristband cable into the ESD jack located on the lower-right outside edge of the shelf assembly.

Step 1 For an ONS 15454 ETSI shelf, complete the following tasks as necessary:

- Complete the "DLP-G20 Install Alarm Wires on the MIC-A/P (ETSI Only)" task on page 1-48 if you want to provision external alarms and/or controls with the AIC-I card.
- Complete the "DLP-G21 Install Timing Wires on the MIC-C/T/P (ETSI Only)" task on page 1-51 if you are provisioning external timing.
- Complete the DLP-G22 Install LAN Wires on the MIC-C/T/P (ETSI Only), page 1-52 to create an external LAN connection. LAN wires or the LAN port on the TCC2 card are necessary to create an external LAN connection.

Step 2 For an ONS 15445 ANSI shelf, complete the following tasks as necessary:

- Complete the "DLP-G23 Install Alarm Wires on the Backplane (ANSI Only)" task on page 1-53 if you are using an AIC or AIC-I card and are not using an AEP.
- Complete the DLP-G24 Install Timing Wires on the Backplane (ANSI Only), page 1-56 if you are provisioning external timing.
- Complete the "DLP-G25 Install LAN Wires on the Backplane (ANSI Only)" task on page 1-57 to create an external LAN connection. LAN wires or the LAN port on the TCC2 card are necessary to create an external LAN connection.
- Complete the "DLP-G26 Install the TL1 Craft Interface (ANSI Only)" task on page 1-58 to access TL1 using the craft interface. Craft wires or the EIA/TIA-232 port on the TCC2 card are required to access TL1.

Stop. You have completed this procedure.

DLP-G20 Install Alarm Wires on the MIC-A/P (ETSI Only)

Purpose	This task installs alarm cables on the MIC-A/P on the ONS 15454 ETSI so that you can provision external (environmental) alarms and controls with the AIC-I card.
Tools/Equipment	DB-62 connector 0.51 mm² or 0.64 mm² (#22 or #24 AWG) wires
Prerequisite Procedures	NTP-G6 Install the MIC-A/P and MIC-T/C/P FMECs (ETSI Only), page 1-27
Required/As Needed	As needed
Onsite/Remote	Onsite
Security Level	None

Step 1 Using 0.51 mm² or 0.64 mm² (#22 or #24 AWG) wires, connect the alarm and control wires on the appropriate pins of the DB-62 connector. The pin connectors, signal names, and functions are listed in Table 1-3.

Table 1-3 Alarm Pin Assignments

DB-62 Pin Connector	Signal Name	Function
1	ALMCUTOFF–	Alarm cutoff
2	ALMCUTOFF+	Alarm cutoff
3	ALMINP0–	Alarm input pair number 1
4	ALMINP0+	Alarm input pair number 1
5	ALMINP1–	Alarm input pair number 2
6	ALMINP1+	Alarm input pair number 2
7	ALMINP2–	Alarm input pair number 3
8	ALMINP2+	Alarm input pair number 3
9	ALMINP3–	Alarm input pair number 4
10	ALMINP3+	Alarm input pair number 4
11	EXALM0–	Extra alarm 0
12	EXALM0+	Extra alarm 0
13	FGND	Ground
14	EXALM1–	Extra alarm 1
15	EXALM1+	Extra alarm 1
16	EXALM2–	Extra alarm 2
17	EXALM2+	Extra alarm 2
18	EXALM3–	Extra alarm 3
19	EXALM3+	Extra alarm 3
20	EXALM4–	Extra alarm 4
21	EXALM4+	Extra alarm 4
22	EXALM5–	Extra alarm 5
23	EXALM5+	Extra alarm 5
24	EXALM6–	Extra alarm 6
25	EXALM6+	Extra alarm 6
26	FGND	Ground
27	EXALM7–	Extra alarm 7
28	EXALM7+	Extra alarm 7
29	EXALM8–	Extra alarm 8
30	EXALM8+	Extra alarm 8
31	EXALM9–	Extra alarm 9
32	EXALM9+	Extra alarm 9
33	EXALM10–	Extra alarm 10
34	EXALM10+	Extra alarm 10
35	EXALM11–	Extra alarm 11
36	EXALM11+	Extra alarm 11

Table 1-3 Alarm Pin Assignments (continued)

DB-62 Pin Connector	Signal Name	Function
37	ALMOUP0–	Normally open output pair number 1
38	ALMOUP0+	Normally open output pair number 1
39	FGND	Ground
40	ALMOUP1–	Normally open output pair number 2
41	ALMOUP1+	Normally open output pair number 2
42	ALMOUP2–	Normally open output pair number 3
43	ALMOUP2+	Normally open output pair number 3
44	ALMOUP3–	Normally open output pair number 4
45	ALMOUP3+	Normally open output pair number 4
46	AUDALM0–	Normally open minor audible alarm
47	AUDALM0+	Normally open minor audible alarm
48	AUDALM1–	Normally open major audible alarm
49	AUDALM1+	Normally open major audible alarm
50	AUDALM2–	Normally open critical audible alarm
51	AUDALM2+	Normally open critical audible alarm
52	FGND	Ground
53	AUDALM3–	Normally open remote audible alarm
54	AUDALM3+	Normally open remote audible alarm
55	VISALM0–	Normally open minor visible alarm
56	VISALM0+	Normally open minor visible alarm
57	VISALM1–	Normally open major visible alarm
58	VISALM1+	Normally open major visible alarm
59	VISALM2–	Normally open minor visible alarm
50	VISALM2+	Normally open minor visible alarm
61	VISALM3–	Normally open minor visible alarm
62	VISALM3+	Normally open minor visible alarm

Step 2 Connect the other end of the alarm and control wires according to local site practice.

Step 3 Connect the DB-62 connector to the ALARM IN/OUT connector on the MIC-A/P faceplate.

Step 4 Tighten the screws of the connector on the alarm cable.

Step 5 Return to your originating procedure (NTP).

DLP-G21 Install Timing Wires on the MIC-C/T/P (ETSI Only)

Purpose	This task installs the timing cables on the ONS 15454 ETSI MIC-C/T/P.
Tools/Equipment	75-ohm coaxial cable with a 1.0/2.3 miniature coax connector on the MIC-C/T/P side
Prerequisite Procedures	NTP-G6 Install the MIC-A/P and MIC-T/C/P FMECs (ETSI Only), page 1-27
Required/As Needed	As needed
Onsite/Remote	Onsite
Security Level	None

Step 1 Using coaxial cable with 1.0/2.3 miniature coax connectors, connect the clock cable to the appropriate connector on the faceplate of the MIC-C/T/P.

Step 2 Gently push the cable with the 1.0/2.3 miniature coax connector down until the cable connector slides into the 1.0/2.3 miniature coax connector on the faceplate with a click.

The MIC-C/T/P provides 1.0/2.3 miniature coax connectors that are used for timing input and output. The top connectors are for “A” (BITS-1) timing, and the bottom connectors are for “B” (BITS-2) timing. In each case, the left connector is the input and the right connector is the output. The input connectors for timing provide a 75-ohm termination. System cables are available that can convert timing clocks from 75 ohms to 100/120 ohms. Table 1-4 shows MIC-C/T/P pin assignments.

Table 1-4 MIC-C/T/P Clock Connector Pin Assignment

Pin	Function
IN 1	Input from external device
OUT 1	Output to external device
IN 2	Input from external device
OUT 2	Output to external device

A high-impedance option (> 3 kilo-ohms or greater) is possible through a jumper on the MIC-C/T/P FMEC. You can change the top timing input to high impedance by removing the jumper on P3 of the MIC-C/T/P FMEC. You can change the bottom timing input to high impedance by removing the jumper on P2 on the MIC-C/T/P FMEC.

Note Refer to ITU-T G.813 for rules about provisioning timing references.

Step 3 Connect the other end of the cable to the external source of the timing signal according to Table 1-4.

Step 4 Repeat Step 3 for each cable that is required.

Step 5 Return to your originating procedure (NTP).

DLP-G22 Install LAN Wires on the MIC-C/T/P (ETSI Only)

Purpose	This task installs the LAN wires on the ONS 15454 ETSI MIC-C/T/P.
Tools/Equipment	Standard CAT-5 UTP Ethernet cable (straight-through for data terminating equipment [DTE] or cross-over for data circuit-terminating equipment [DCE]) or RJ-45 connector Crimping tool for RJ-45 connector 0.51 mm² or 0.64 mm² (#22 or #24 AWG) wire, preferably CAT-5 UTP
Prerequisite Procedures	NTP-G6 Install the MIC-A/P and MIC-T/C/P FMECs (ETSI Only), page 1-27
Required/As Needed	As needed
Onsite/Remote	Onsite
Security Level	None

Note Rather than using the LAN connection port on the MIC-C/T/P, you can use the LAN connection port on the TCC2 card if preferred. Use either the MIC-C/T/P connection or the TCC2 card connection. You cannot use the LAN connection port on the MIC-C/T/P and the LAN connection port on the TCC2 card simultaneously; however, it is possible for you to make a direct connection from a computer to the LAN connection port on the TCC2 card while the LAN connection port on the MIC-C/T/P is in use as long as the computer connected directly to the TCC2 card is not connected to a LAN.

Step 1 Using 0.51 mm² or 0.64 mm² (#22 or #24 AWG) wire or CAT-5 UTP Ethernet cable, connect the wires to the RJ-45 connector according to Table 1-5.

Table 1-5 LAN Pin Assignments

LAN	RJ-45 Pin	RJ-45 Pin	Function
LAN 1 Connecting to DCE[1] (a hub or switch) Cross-over Ethernet cable	1	3	PNMSRX+ white/green
	2	6	PNMSRX– green
	3	1	PNMSTX white/orange
	4	4	—
	5	5	—
	6	2	PNMSTX– orange
	7	7	—
	8	8	—

Table 1-5 LAN Pin Assignments (continued)

LAN	RJ-45 Pin	RJ-45 Pin	Function
LAN 1 Connecting to DTE (a PC/workstation or router) Straight-through Ethernet cable	1	1	PNMSRX+ white/green
	2	2	PNMSRX– green
	3	3	PNMSTX+ white/orange
	4	4	—
	5	5	—
	6	6	PNMSTX– orange
	7	7	—
	8	8	—

1. The Cisco ONS 15454 ETSI is DCE.

Step 2 Return to your originating procedure (NTP).

DLP-G23 Install Alarm Wires on the Backplane (ANSI Only)

Purpose	This task installs alarm wires on the backplane so that you can provision external (environmental) alarms and controls with the AIC or AIC-I card. If you are using the AEP, do not perform this task.
Tools/Equipment	Wire wrapper #22 or #24 AWG (0.51 mm² or 0.64 mm²) wires 100-ohm shielded BITS clock cable pair #22 or #24 AWG (0.51 mm² or 0.64 mm²), twisted-pair T1-type
Prerequisite Procedures	NTP-G5 Remove the Backplane Covers (ANSI Only), page 1-26
Required/As Needed	As needed
Onsite/Remote	Onsite
Security Level	None

Step 1 Using 100-ohm shielded BITS clock cable pair #22 or #24 AWG (0.51 mm² or 0.64 mm²) twisted-pair T1-type wires, wrap the alarm wires on the appropriate wire-wrap pins according to local site practice. Ground the shield of the BITS Input cable at the BITS end. For BITS Output, wrap the ground shield of the BITS cable to the frame ground pin (FG1) located below the column of BITS pins.

Figure 1-20 shows alarm pin assignments for the AIC-I in the Release 3.4 or higher ONS 15454 backplane and Figure 1-21 calls out the external alarm pins on that backplane.

Note The AIC-I requires a shelf assembly running Software Release 3.4.0 or later. The backplane of the ANSI shelf contains a wire-wrap field with pin assignment according to the layout in Figure 1-20.

Figure 1-20 Cisco ONS 15454 Backplane Pinouts (Release 3.4 or Later)

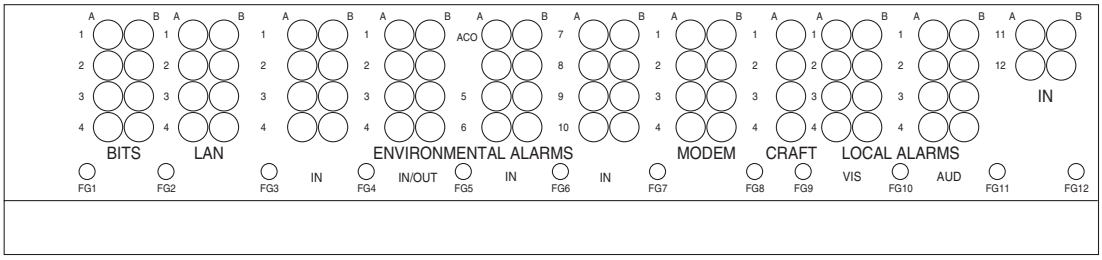

Field	Pin	Function
BITS	A1	BITS Output 2 negative (–)
	B1	BITS Output 2 positive (+)
	A2	BITS Input 2 negative (–)
	B2	BITS Input 2 positive (+)
	A3	BITS Output 1 negative (–)
	B3	BITS Output 1 positive (+)
	A4	BITS Input 1 negative (–)
	B4	BITS Input 1 positive (+)
LAN	Connecting to a hub, or switch	
	A1	RJ-45 pin 6 RX–
	B1	RJ-45 pin 3 RX+
	A2	RJ-45 pin 2 TX–
	B2	RJ-45 pin 1 TX+
	Connecting to a PC/Workstation or router	
	A1	RJ-45 pin 2 RX–
	B1	RJ-45 pin 1 RX+
	A2	RJ-45 pin 6 TX–
	B2	RJ-45 pin 3 TX+
ENVIR ALARMS IN	A1	Alarm input pair number 1: Reports closure on connected wires.
	B1	
	A2	Alarm input pair number 2: Reports closure on connected wires.
	B2	
	A3	Alarm input pair number 3: Reports closure on connected wires.
	B3	
	A4	Alarm input pair number 4: Reports closure on connected wires.
	B4	
	A5	Alarm input pair number 5: Reports closure on connected wires.
	B5	
	A6	Alarm input pair number 6: Reports closure on connected wires.
	B6	
	A7	Alarm input pair number 7: Reports closure on connected wires.
	B7	
	A8	Alarm input pair number 8: Reports closure on connected wires.
	B8	
	A9	Alarm input pair number 9: Reports closure on connected wires.
	B9	
	A10	Alarm input pair number 10: Reports closure on connected wires.
	B10	
	A11	Alarm input pair number 11: Reports closure on connected wires.
	B11	
	A12	Alarm input pair number 12: Reports closure on connected wires.
	B12	

Field	Pin	Function
ENVIR ALARMS IN/OUT N/O	A1/A13	Normally open output pair number 1
	B1/B13	
	A2/A14	Normally open output pair number 2
	B2/B14	
	A3/A15	Normally open output pair number 3
	B3/B15	
	A4/A16	Normally open output pair number 4
	B4/B16	
ACO	A1	Normally open ACO pair
	B1	
CRAFT	A1	Receive (PC pin #2)
	A2	Transmit (PC pin #3)
	A3	Ground (PC pin #5)
	A4	DTR (PC pin #4)
LOCAL ALARMS AUD (Audible) N/O	A1	Alarm output pair number 1: Remote audible alarm.
	B1	
	A2	Alarm output pair number 2: Critical audible alarm.
	B2	
	A3	Alarm output pair number 3: Major audible alarm.
	B3	
	A4	Alarm output pair number 4: Minor audible alarm.
	B4	
LOCAL ALARMS VIS (Visual) N/O	A1	Alarm output pair number 1: Remote visual alarm.
	B1	
	A2	Alarm output pair number 2: Critical visual alarm.
	B2	
	A3	Alarm output pair number 3: Major visual alarm.
	B3	
	A4	Alarm output pair number 4: Minor visual alarm.
	B4	

If you are using an AIC-I card, contacts provisioned as OUT are 1-4. Contacts provisioned as IN are 13-16.

83020

Figure 1-21 Highlighted Environmental Alarms

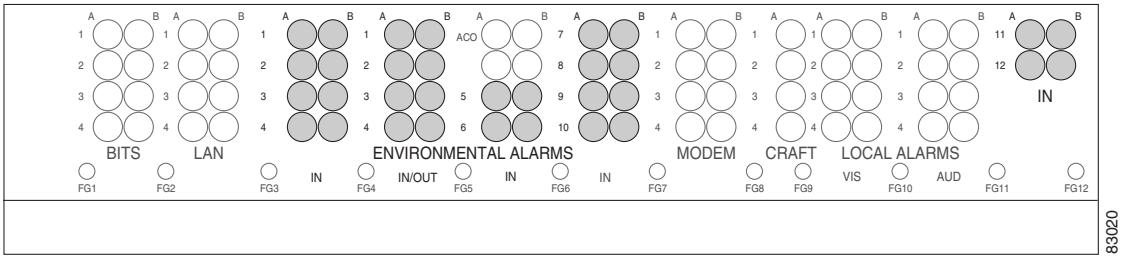

Note The X.25, Modem, and TBOS pin fields are not active on either pin field.

Step 2 Return to your originating procedure (NTP).

DLP-G24 Install Timing Wires on the Backplane (ANSI Only)

Purpose	This task installs the BITS timing wires on the ONS 15454 ANSI backplane.
Tools/Equipment	Wire wrapper
	100-ohm shielded BITS clock cable pair #22 or #24 AWG (0.51 mm² or 0.64 mm²), twisted-pair T1-type
Prerequisite Procedures	NTP-G5 Remove the Backplane Covers (ANSI Only), page 1-26
Required/As Needed	As needed
Onsite/Remote	Onsite
Security Level	None

Step 1 Using 100-ohm shielded BITS clock cable #22 or #24 AWG (0.51 mm² or 0.64 mm²), twisted-pair T1-type, wrap the clock wires on the appropriate wire-wrap pins according to local site practice.

Ground the shield of the BITS input cable at the BITS end. For BITS output, wrap the ground shield of the BITS cable to the frame ground pin (FG1) located beneath the column of BITS pins. Table 1-6 lists the pin assignments for the BITS timing pin fields.

Table 1-6 External Timing Pin Assignments for BITS

BITS Pin	Tip/Ring	CTC/TL1 Name	Function
A4	ring	BITS-1	Input from BITS device 1
B4	tip	BITS-1	Input from BITS device 1
A3	ring	BITS-1	Output to external device 1
B3	tip	BITS-1	Output to external device 1
A2	ring	BITS-2	Input from BITS device 2
B2	tip	BITS-2	Input from BITS device 2

Table 1-6 External Timing Pin Assignments for BITS (continued)

BITS Pin	Tip/Ring	CTC/TL1 Name	Function
A1	ring	BITS-2	Output to external device 2
B1	tip	BITS-2	Output to external device 2

Note For more detailed information about timing, see Chapter 18, "Security and Timing." To set up system timing, see the "NTP-G53 Set Up Timing" procedure on page 5-4.

Step 2 Return to your originating procedure (NTP).

DLP-G25 Install LAN Wires on the Backplane (ANSI Only)

Purpose	This task installs the LAN wires on the ONS 15454 ANSI backplane.
Tools/Equipment	Wire wrapper
	#22 or #24 AWG (0.51 mm² or 0.64 mm²) wire, preferably CAT-5 UTP
Prerequisite Procedures	None
Required/As Needed	As needed
Onsite/Remote	Onsite
Security Level	None

Note Rather than using the LAN wires, you can use the LAN connection port on the TCC2 if preferred. Use either the backplane connection or the TCC2 front connection. You cannot use the LAN backplane pins and the LAN connection port on the TCC2 simultaneously; however, it is possible for you to make a direct connection from a computer to the LAN connection port on the TCC2 while the LAN backplane pins are in use as long as the computer that is connected directly to the TCC2 is not connected to a LAN.

Step 1 Using #22 or #24 AWG (0.51 mm² or 0.64 mm²) wire or CAT-5 UTP Ethernet cable, wrap the wires on the appropriate wire-wrap pins according to local site practice.

Caution Cross talk might result if both receive (Rx) and transmit (Tx) pins connect on the same twisted pair of wires from the CAT-5 cable. The two Tx pins need to be on one twisted pair, and the two Rx pins need to be on another twisted pair.

A frame ground pin is located beneath each pin field (FG2 for the LAN pin field). Wrap the ground shield of the LAN interface cable to the frame ground pin. Table 1-7 shows the LAN pin assignments.

Table 1-7 LAN Pin Assignments for the ONS 15454 ANSI Shelf

Pin Field	Backplane Pins	RJ-45 Pins	Function/Color
LAN 1 Connecting to data circuit-terminating equipment (DCE) (a hub or switch); the ONS 15454 is a DCE	B2	1	TX+ white/green
	A2	2	TX– green
	B1	3	RX+ white/orange
	A1	6	RX– orange
LAN 1 Connecting to data terminal equipment (DTE) (a PC/workstation or router)	B1	1	RX+ white/green
	A1	2	RX– green
	B2	3	TX+ white/orange
	A2	6	TX– orange

Note The TCC2 does not support Ethernet polarity detection. If your Ethernet connection has incorrect polarity (this can only occur with cables that have the receive wire pairs flipped), a "Lan Connection Polarity Reversed" condition is raised. This condition usually occurs during an upgrade or initial node deployment. To correct the situation, ensure that your Ethernet cable has the correct mapping of the wire-wrap pins.

Step 2 Return to your originating procedure (NTP).

DLP-G26 Install the TL1 Craft Interface (ANSI Only)

Purpose	This task installs the TL1 craft interface on the ONS 15454 ANSI shelf using the craft backplane pins. You can also use a LAN cable connected to the TCC2 EIA/TIA-232 port to access a TL1 craft interface.
Tools/Equipment	Wire wrapper #22 or #24 AWG (0.51 mm² or 0.64 mm²) alarm wires
Prerequisite Procedures	NTP-G5 Remove the Backplane Covers (ANSI Only), page 1-26
Required/As Needed	As needed
Onsite/Remote	Onsite
Security Level	None

Note Rather than using the craft pins, you can use a LAN cable connected to the TCC2 EIA/TIA-232 port to access a TL1 craft interface.

Step 1 Using #22 or #24 AWG (0.51 mm² or 0.64 mm²) wire, wrap the craft interface wires on the appropriate wire-wrap pins according to local site practice.

Step 2 Wrap the ground shield of the craft interface cable to the frame-ground pin.

Wrap the ground wire of your computer cable to pin A3 on the craft pin field. Table 1-8 shows the pin assignments for the CRAFT pin field.

Note You cannot use the craft backplane pins and the EIA/TIA-232 port on the TCC2 card simultaneously. Using a combination prevents access to the node or causes a loss in connectivity.

Table 1-8 Craft Interface Pin Assignments

Pin Field	Contact	Function
Craft	A1	Receive
	A2	Transmit
	A3	Ground
	A4	DTR

Step 3 Return to your originating procedure (NTP).

NTP-G11 Install an External Wire-Wrap Panel on the AEP (ANSI Only)

Purpose	This procedure connects an external wire-wrap panel to the ONS 15454 ANSI AEP to provide the physical alarm contacts for the AEP.
Tools/Equipment	External wire-wrap panel
Prerequisite Procedures	NTP-G9 Install the Alarm Expansion Panel (ANSI Only), page 1-44
Required/As Needed	As needed
Onsite/Remote	Onsite
Security Level	None

Step 1 Position the lower cover over the AEP. Make sure that the AEP AMP Champ connectors protrude through the cutouts in the lower cover (Figure 1-22).

Figure 1-22 Installing the AEP Cover

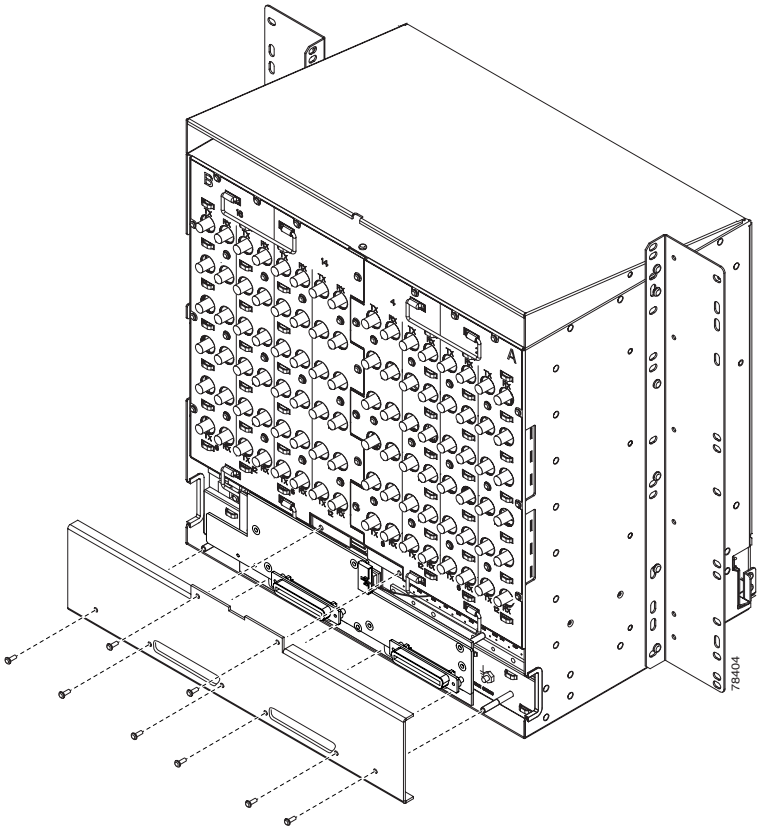

Step 2 Insert and tighten the eight screws to secure the AEP cover to the AEP.

Step 3 Connect the cables from the external wire-wrap panel to the AMP Champ connectors on the AEP. Table 1-9 lists the alarm input pin assignments.

Table 1-9 Alarm Input Pin Assignments

AMP Champ Pin	Signal Name	AMP Champ Pin	Signal Name
1	ALARM_IN_1–	27	GND
2	GND	28	ALARM_IN_2–
3	ALARM_IN_3–	29	ALARM_IN_4–
4	ALARM_IN_5–	30	GND
5	GND	31	ALARM_IN_6–
6	ALARM_IN_7–	32	ALARM_IN_8–
7	ALARM_IN_9–	33	GND
8	GND	34	ALARM_IN_10–
9	ALARM_IN_11–	35	ALARM_IN_12–
10	ALARM_IN_13–	36	GND
11	GND	37	ALARM_IN_14–
12	ALARM_IN_15–	38	ALARM_IN_16–

Table 1-9 Alarm Input Pin Assignments (continued)

AMP Champ Pin	Signal Name	AMP Champ Pin	Signal Name
13	ALARM_IN_17–	39	GND
14	GND	40	ALARM_IN_18–
15	ALARM_IN_19–	41	ALARM_IN_20–
16	ALARM_IN_21–	42	GND
17	GND	43	ALARM_IN_22–
18	ALARM_IN_23–	44	ALARM_IN_24–
19	ALARM_IN_25–	45	GND
20	GND	46	ALARM_IN_26–
21	ALARM_IN_27–	47	ALARM_IN_28–
22	ALARM_IN_29–	48	GND
23	GND	49	ALARM_IN_30–
24	ALARM_IN_31–	50	—
25	ALARM_IN_+	51	GND1
26	ALARM_IN_0-	52	GND2

Table 1-10 lists the alarm output (external control) pin assignments.

Table 1-10 Alarm Output Pin Assignments

AMP Champ Pin	Signal Name	AMP Champ Pin	Signal Name
1	—	27	COM_0
2	COM_1	28	—
3	NO_1	29	NO_2
4	—	30	COM_2
5	COM_3	31	—
6	NO_3	32	NO_4
7	—	33	COM_4
8	COM_5	34	—
9	NO_5	35	NO_6
10	—	36	COM_6
11	COM_7	37	—
12	NO_7	38	NO_8
13	—	39	COM_8
14	COM_9	40	—
15	NO_9	41	NO_10
16	—	42	COM_10
17	COM_11	43	—

Table 1-10 Alarm Output Pin Assignments (continued)

AMP Champ Pin	Signal Name	AMP Champ Pin	Signal Name
18	NO_11	44	NO_12
19	—	45	COM_12
20	COM_13	46	—
21	NO_13	47	NO_14
22	—	48	COM_14
23	COM_15	49	—
24	NO_15	50	—
25	—	51	GND1
26	NO_0	52	GND2

Figure 1-23 illustrates the alarm input connectors.

Figure 1-23 Alarm Input Connector

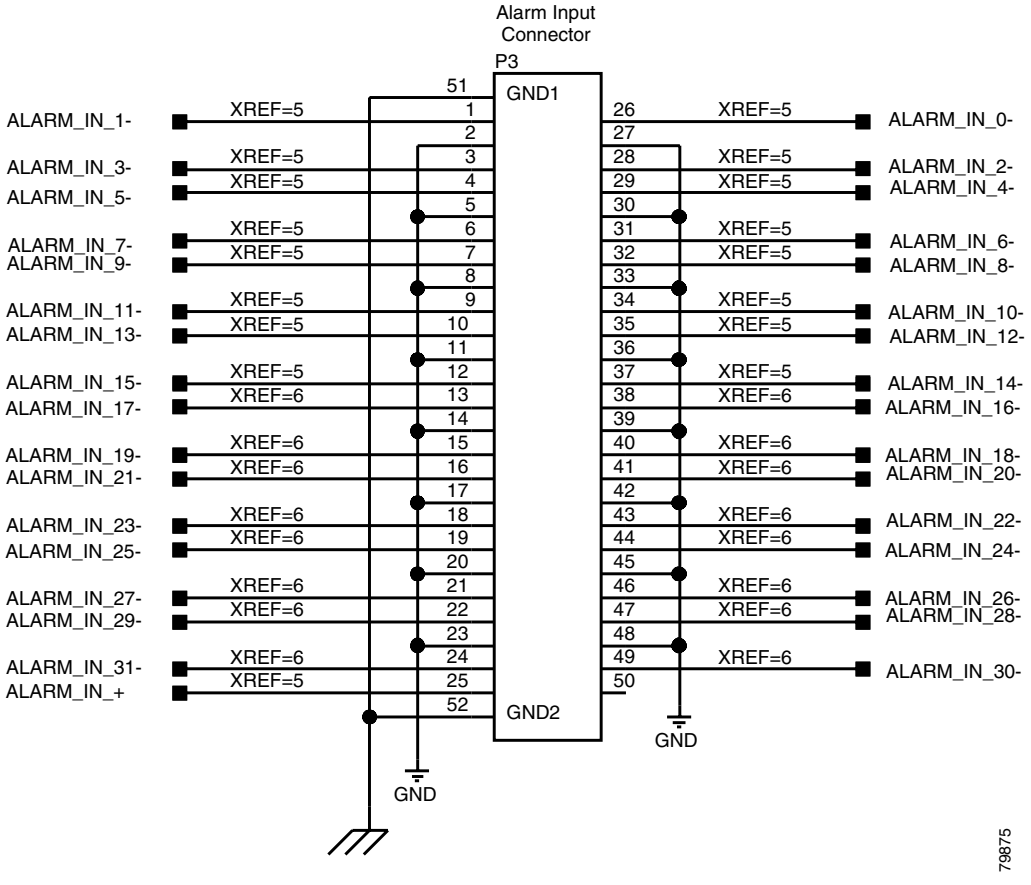

Figure 1-24 illustrates the alarm output connectors.

Figure 1-24 Alarm Output Connector

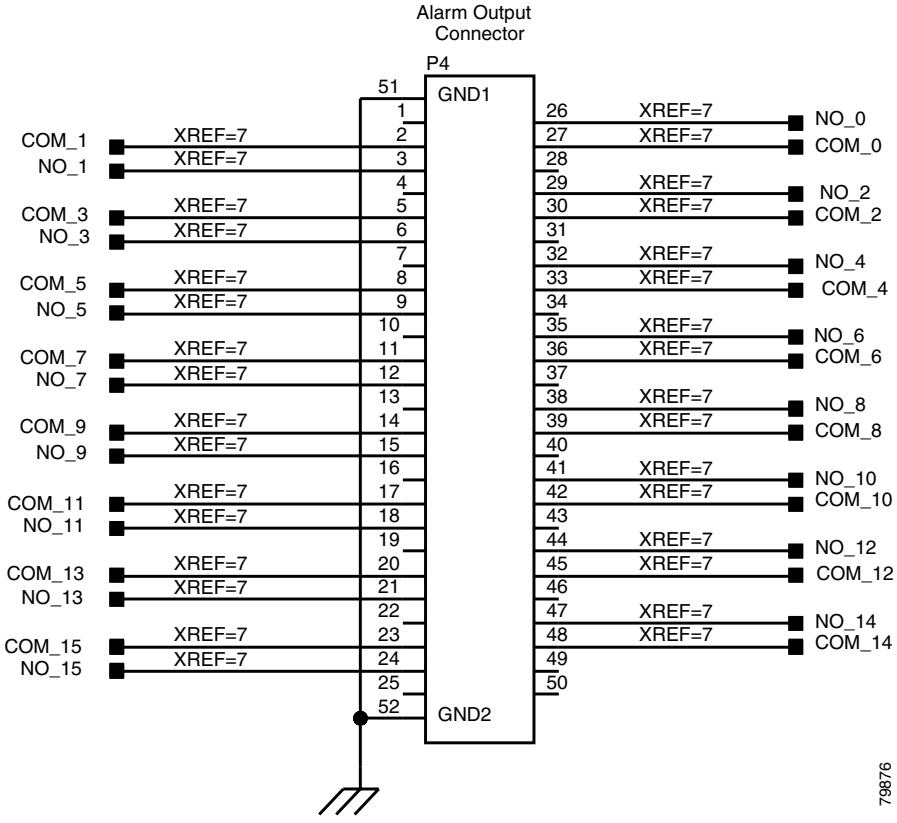

Step 4 Continue with the "NTP-G12 Install and Close the FMEC Cover (ETSI Only)" procedure on page 1-63 as needed.

Stop. You have completed this procedure.

NTP-G12 Install and Close the FMEC Cover (ETSI Only)

Purpose	This procedure installs and closes the ONS 15454 ETSI FMEC cover.
Tools/Equipment	#2 Phillips screwdriver Medium slot-head screwdriver Small slot-head screwdriver
Prerequisite Procedures	NTP-G4 Open and Remove the FMEC Cover (ETSI Only), page 1-23
Required/As Needed	Required
Onsite/Remote	Onsite
Security Level	None

Step 1 Insert the cover carefully onto the left pin of the hinge (Figure 1-25).

Step 2 Move the cover to the right side towards the right pin of the hinge.

Step 3 Pull the right side of the hinge-locking spring (Figure 1-25). Push the cover onto the right pin until the spring snaps into place.

Figure 1-25 ONS 15454 ETSI FMEC Cover

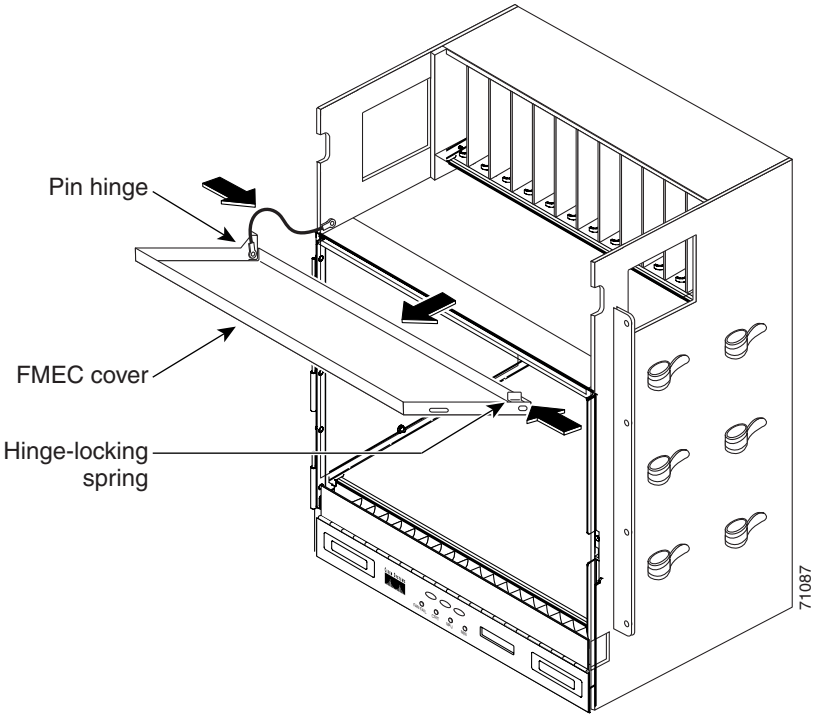

Step 4 Attach the ground wire to the shelf.

Step 5 Attach the washer and nut.

Step 6 Attach the cover to the shelf using the screws on the top of the cover.

Step 7 Continue with the "NTP-G14 Install DWDM Equipment" procedure on page 1-66.

Stop. You have completed this procedure.

NTP-G13 Install the Rear Cover (ANSI Only)

Purpose	The following procedure explains how to install the rear cover on an ONS 15454 ANSI shelf.
Tools/Equipment	#2 Phillips screwdriver Medium slot-head screwdriver Small slot-head screwdriver
Prerequisite Procedures	NTP-G5 Remove the Backplane Covers (ANSI Only), page 1-26
Required/As Needed	Required
Onsite/Remote	Onsite
Security Level	None

Step 1 Locate the three screws that run vertically along on each side of the backplane (Figure 1-26).

Figure 1-26 Backplane Attachment for the Rear Cover

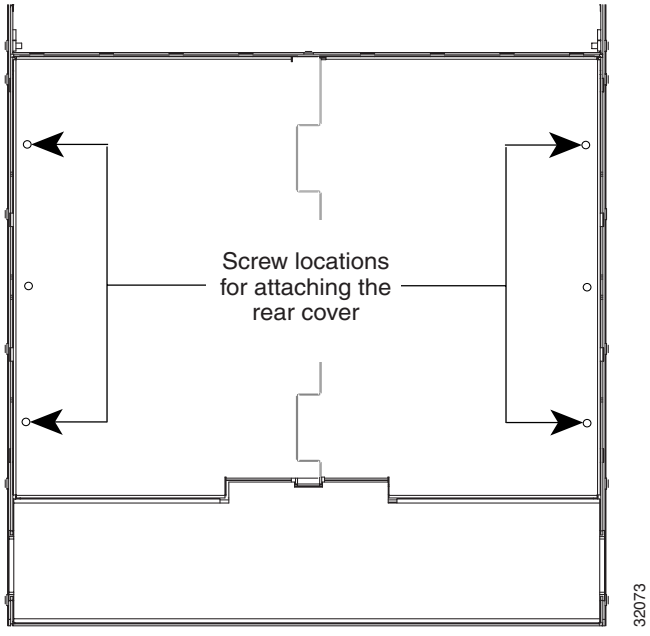

Tip Only six screws (three on each side) line up with the screw slots on the mounting brackets, making the screws easy to locate.

Step 2 Loosen the top and bottom screws on one edge of the backplane to provide room to slide the mounting brackets into place using the U-shaped screw slots on each end.

Step 3 Slide one of the mounting brackets into place and tighten the screws.

Step 4 Repeat Steps 2 and 3 for the second mounting bracket.

Step 5 Attach the cover by hanging it from the mounting screws on the back of the mounting brackets and pulling it down until it fits snugly into place.

Figure 1-27 shows rear cover installation using spacers.

Figure 1-27 Installing the Rear Cover with Spacers

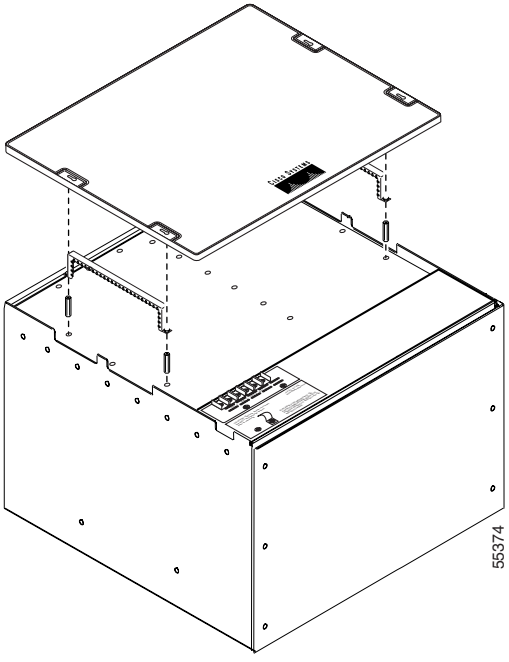

Step 6 Continue with the "NTP-G14 Install DWDM Equipment" procedure on page 1-66.

Stop. You have completed this procedure.

NTP-G14 Install DWDM Equipment

Purpose	This procedure installs the optional DWDM assemblies.
Tools/Equipment	#2 Phillips screwdriver Crimping tool (large enough for #10 to #14 AWG) #14 AWG wire
Prerequisite Procedures	NTP-G2 Install the Shelf Assembly, page 1-8
Required/As Needed	As needed
Onsite/Remote	Onsite
Security Level	None

Step 1 Complete the "DLP-G27 Install the DCU Shelf Assembly" task on page 1-67 as needed.

Step 2 Complete the "DLP-G28 Install the Fiber Patch Panel Shelf" task on page 1-68 as needed.

Step 3 Complete the "DLP-G29 Install the Fiber Storage Shelf" task on page 1-68 as needed.

Step 4 Complete the "DLP-G8 Install the Air Ramp" task on page 1-19 as needed.

Step 5 Complete the "DLP-G30 Install the FlexLayer Shelf" task on page 1-69 as needed.

Note Procedures for installing FlexLayer hardware in this chapter require that you have a network plan calculated for your DWDM network with Cisco MetroPlanner, Release 2.5. MetroPlanner is a DWDM planning tool that is available your Cisco account representative. MetroPlanner prepares a shelf plan for each network node and calculates the power and attenuation levels for the DWDM cards installed in the node. For information about Cisco MetroPlanner, refer to the *Cisco MetroPlanner DWDM Operations Guide*, Release 2.5.

Step 6 Complete the "DLP-G31 Install the FlexLayer Modules" task on page 1-69 as needed.

Step 7 Complete the "DLP-G32 Install the Y-Cable Protection Modules" task on page 1-71 as needed.

Stop. **You have completed this procedure**.

DLP-G27 Install the DCU Shelf Assembly

Purpose	If you are installing dispersion compensation modules, use this task to install the Dispersion Compensation Unit (DCU) chassis.
Tools/Equipment	#2 Phillips screwdriver Crimping tool #14 AWG wire and lug
Prerequisite Procedures	None
Required/As Needed	As needed
Onsite/Remote	Onsite
Security Level	None

Step 1 The DCU chassis requires 1 rack unit (RU) in a standard 19-inch (482.6-mm) or 23-inch (584.2-mm) rack. Locate the RMU space specified in your site plan. See the "13.5 Typical DWDM Rack Layouts" section on page 13-16 for common site layout plans.

Step 2 Two sets of mounting brackets are included with the DCU mounting kit, one set each for 19-inch (482.6-mm) or 23-inch (584.2-mm) racks. Verify that your chassis is equipped with the correct set of brackets for your rack. Change the brackets as required.

Step 3 Align the chassis with the rack mounting screw holes; one at a time, insert and tighten the four screws.

Warning **This equipment must be properly grounded per local standards and in compliance with Network Equipment Building Standard (NEBS) requirements. If not properly grounded, personal injury or equipment failure could occur.**

Step 4 Connect a frame ground to the ground terminal provided on either side of the chassis. Use minimum #14 AWG wire.

Step 5 Return to your originating procedure (NTP).

DLP-G28 Install the Fiber Patch Panel Shelf

Purpose	This task installs the fiber patch panel shelf.
Tools/Equipment	#2 Phillips screwdriver
Prerequisite Procedures	None
Required/As Needed	As needed
Onsite/Remote	Onsite
Security Level	None

Step 1 The fiber patch panel shelf requires 1 RU in a standard 19-inch (482.6-mm) or 23-inch (584.2-mm) rack. Locate the RMU space specified in your site plan. See the "13.5 Typical DWDM Rack Layouts" section on page 13-16 for common site configurations.

Step 2 Verify that the mounting brackets attached to the unit are correct for your rack size. Complete "DLP-G3 Reverse the Mounting Bracket to Fit a 19-inch (482.6-mm) Rack (ANSI Only)" task on page 1-10 as required.

Step 3 Align the chassis with the rack mounting screw holes, then insert and tighten the four screws.

Step 4 Return to your originating procedure (NTP).

DLP-G29 Install the Fiber Storage Shelf

Purpose	This task installs the fiber storage shelf.
Tools/Equipment	#2 Phillips screwdriver
Prerequisite Procedures	None
Required/As Needed	As needed
Onsite/Remote	Onsite
Security Level	None

Step 1 The fiber storage shelf requires 1 RU in a standard 19-inch (482.6-mm) or 23-inch (584.2-mm) rack. Locate the RMU space specified in your site plan. See the "13.5 Typical DWDM Rack Layouts" section on page 13-16 for common site configurations.

Step 2 Verify that the mounting brackets attached to the unit are correct for your rack size. Complete "DLP-G3 Reverse the Mounting Bracket to Fit a 19-inch (482.6-mm) Rack (ANSI Only)" task on page 1-10 as required.

Step 3 Align the chassis with the rack mounting screw holes, insert the screws (4) and tighten.

Step 4 Return to your originating procedure (NTP).

DLP-G30 Install the FlexLayer Shelf

Purpose	This task installs the FlexLayer shelf. Perform this task if you are installing any FlexLayer modules or are protecting more than two channels with Y-cable protection modules.
Tools/Equipment	#2 Phillips screwdriver FlexLayer shelf assembly (15216-FL-SA)
Prerequisite Procedures	None
Required/As Needed	As needed
Onsite/Remote	Onsite
Security Level	None

Step 1 The FlexLayer shelf requires 1 RU in a standard 19-inch (482.6-mm) or 23-inch (584.2-mm) rack. Locate the RMU space specified in your site plan. Refer to Chapter 13, "Shelf Hardware Reference" for typical DWDM site layout plans.

Step 2 A set of mounting brackets are included with the FlexLayer mounting kit, one set each for 19-inch (482.6-mm) or 23-inch (584.2-mm) racks. Verify that your chassis is equipped with the correct set of brackets for your rack. Change the brackets as required.

Step 3 Align the chassis with the rack mounting screw holes; one at a time, insert and tighten the three screws.

Step 4 Repeat this task as necessary for each FlexLayer shelf assembly you want to install.

Step 5 Return to your originating procedure (NTP).

DLP-G31 Install the FlexLayer Modules

Purpose	This task installs the FlexLayer modules in the FlexLayer shelf assembly. You can only install two-channel FlexLayer modules.
Tools/Equipment	#2 Phillips screwdriver FlexLayer modules
Prerequisite Procedures	None
Required/As Needed	As needed
Onsite/Remote	Onsite
Security Level	None

Step 1 Determine the FlexLayer modules that you want to install in the FlexLayer shelf. The FlexLayer shelf can house up to four Add/Drop FlexLayer modules. Table 1-11 lists the two-channel FlexLayer modules and part numbers. Refer to Chapter 13, "Shelf Hardware Reference" for more information about FlexLayer modules.

Table 1-11 ONS 15xxx FlexLayer Hardware Part Numbers

Part Number	Description
2 Channel Add/Drop FlexLayer Modules	
15216-FLB-2-31.1=	ITU-100 GHz 2 Ch, FlexMod - 1530.33 and 1531.12
15216-FLB-2-32.6=	ITU-100 GHz 2 Ch, FlexMod - 1531.90 and 1532.68
15216-FLB-2-35.0=	ITU-100 GHz 2 Ch, FlexMod - 1534.25 and 1535.04
15216-FLB-2-36.6=	ITU-100 GHz 2 Ch, FlexMod - 1535.82 and 1536.61
15216-FLB-2-38.9=	ITU-100 GHz 2 Ch, FlexMod - 1538.19 and 1538.98
15216-FLB-2-40.5=	ITU-100 GHz 2 Ch, FlexMod - 1539.77 and 1540.56
15216-FLB-2-42.9=	ITU-100 GHz 2 Ch, FlexMod - 1542.14 and 1542.94
15216-FLB-2-44.5=	ITU-100 GHz 2 Ch, FlexMod - 1543.73 and 1544.53
15216-FLB-2-46.9=	ITU-100 GHz 2 Ch, FlexMod - 1546.12 and 1546.92
15216-FLB-2-48.5=	ITU-100 GHz 2 Ch, FlexMod - 1547.72 and 1548.51
15216-FLB-2-50.9=	ITU-100 GHz 2 Ch, FlexMod - 1550.12 and 1550.92
15216-FLB-2-52.5=	ITU-100 GHz 2 Ch, FlexMod - 1551.72 and 1552.52
15216-FLB-2-54.9=	ITU-100 GHz 2 Ch, FlexMod - 1554.13 and 1554.94
15216-FLB-2-56.5=	ITU-100 GHz 2 Ch, FlexMod - 1555.75 and 1556.55
15216-FLB-2-58.9=	ITU-100 GHz 2 Ch, FlexMod - 1558.17 and 1558.98
15216-FLB-2-60.6=	ITU-100 GHz 2 Ch, FlexMod - 1559.79 and 1560.61

Step 2 Insert the appropriate module into the FlexLayer shelf assembly.

Note FlexLayer modules are not listed in generated Cisco MetroPlanner 2.5 site plans.

Step 3 Use a Phillips screwdriver to install the two accompanying screws.

Figure 1-28 shows the FlexLayer shelf assembly and how the FlexLayer modules can be installed.

Figure 1-28 ONS 15xxx FlexLayer Shelf Assembly

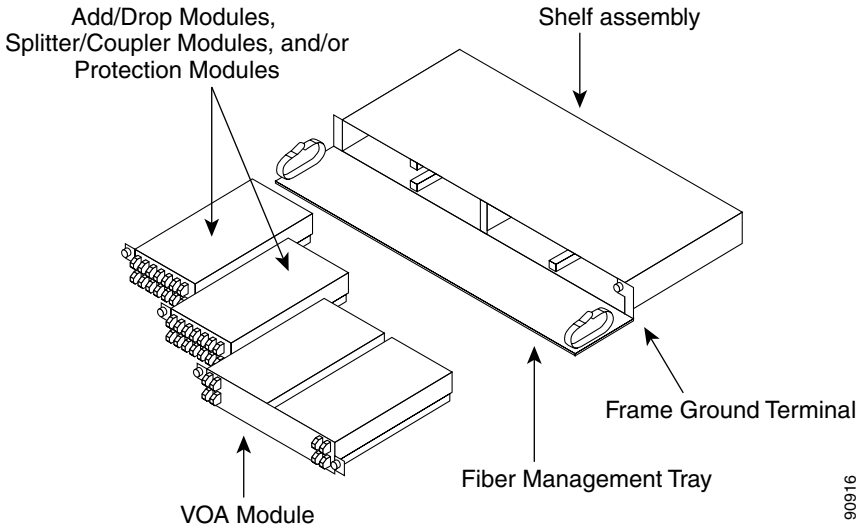

Step 4 Repeat this task as necessary for each FlexLayer module you want to install.

Step 5 Return to your originating procedure (NTP).

DLP-G32 Install the Y-Cable Protection Modules

Purpose	This task installs the Y-Cable Protection modules in the FlexLayer shelf assembly.
Tools/Equipment	#2 Phillips screwdriver Y-Cable modules: • Multi-Mode Y Cable Protection FlexMod: 15216-CS-MM-Y= • Single-Mode Y Cable Protection FlexMod: 15216-CS-SM-Y=
Prerequisite Procedures	None
Required/As Needed	As needed
Onsite/Remote	Onsite
Security Level	None

Step 1 Determine the Y-cable modules that you want to install in the FlexLayer shelf.

Step 2 Insert the appropriate Y-cable module into the FlexLayer shelf assembly. Use a Phillips screwdriver to install the two accompanying screws.

Step 3 Repeat this task as necessary for each Y-cable module you want to install.

Step 4 Return to your originating procedure (NTP).

NTP-G15 Install the Common Control Cards

Purpose	This procedure describes how to install the common control cards.
Tools/Equipment	Redundant TCC2 cards AIC card (optional, ANSI only) AIC-I card (optional)
Prerequisite Procedures	NTP-G2 Install the Shelf Assembly, page 1-8 NTP-G14 Install DWDM Equipment, page 1-66
Required/As Needed	Required
Onsite/Remote	Onsite
Security Level	Provisioning or higher

Warning **During this procedure, wear grounding wrist straps to avoid ESD damage to the card. Do not directly touch the backplane with your hand or any metal tool due to electrical hazard.**

Caution Always use the supplied ESD wristband when working with a powered ONS 15454. Plug the wristband cable into the ESD jack located on the lower-right outside to edge of the shelf assembly.

Note If protective clips are installed on the backplane connectors of the cards, remove the clips before installing the cards.

Note If you install a card incorrectly, the FAIL LED flashes continuously.

Step 1 Complete the "DLP-G33 Install the TCC2 Card" task on page 1-73.

Figure 1-29 shows card installation in an ONS 15454 ETSI shelf.

Figure 1-29 Installing Cards in the ONS 15454 ETSI

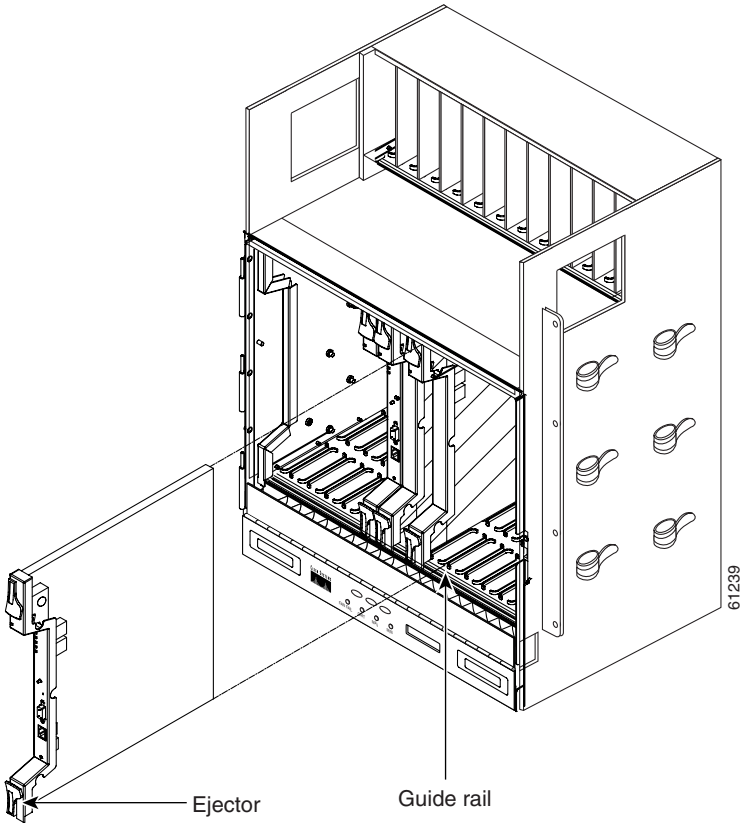

Note If you install the wrong card in a slot, see the "NTP-G107 Remove and Replace DWDM Cards" procedure on page 11-12.

Step 2 Complete the DLP-G34 Install the AIC or AIC-I Card, page 1-76, if necessary.

Step 3 Continue with the "NTP-G16 Perform the Shelf Installation Acceptance Test" procedure on page 1-77.

DLP-G33 Install the TCC2 Card

Purpose	This task installs redundant TCC2 cards. The first card you install in the ONS 15454 must be a TCC2 card, and it must initialize before you install any cross-connect or traffic cards.
Tools/Equipment	Two TCC2 cards
Prerequisite Procedures	None
Required/As Needed	Required
Onsite/Remote	Onsite
Security Level	None

Note When installing cards, allow each card to boot completely before installing the next card.

Step 1 Open the latches/ejectors of the first TCC2 card that you will install.

Step 2 Use the latches/ejectors to firmly slide the card along the guide rails until the card plugs into the receptacle at the back of the slot (Slot 7 or 11).

Step 3 Verify that the card is inserted correctly and close the latches/ejectors on the card.

Note It is possible to close the latches/ejectors when the card is not completely plugged into the back panel of the shelf assembly. Ensure that you cannot insert the card any further.

If you insert a card into a slot provisioned for a different card, all LEDs turn off.

Step 4 Verify the LED activity of the TCC2 card:

- All LEDs turn on briefly.
- The red FAIL LED, the yellow ACT/STBY LED, the red REM LED, the green SYNC LED, and the green ACO LED turn on for about 10 seconds.
- The red FAIL LED and the green ACT/STBY LED turn on for about 40 seconds.
- The red FAIL LED blinks for about 10 seconds.
- The red FAIL LED turns on for about 5 seconds.
- Both green PWR LEDs turn on for 5 seconds. The PWR LEDs then turn red for 2 to 3 minutes before going to steady green.
- All LEDs (including the CRIT, MAJ, MIN, REM, SYNC, and ACO LEDs) blink once and turn off for about 10 seconds.
- The ACT/STBY LED turns on. (The ACT/STBY LED might take several minutes to turn on while the DCC processor boots.)

Note Alarm LEDs might be on; disregard alarm LEDs until you are logged into the Cisco Transport Controller (CTC) and can view the Alarms tab.

Note If the FAIL LED is on continuously, see the tip on page 75 about the TCC2 card automatic upload.

Step 5 Verify that the ACT/STBY LED is green for active. The IP address for the node, the temperature of the ONS 15454, and the time of day should appear on the LCD. The default time and date is 12:00 AM, January 1, 1970.

Step 6 Verify that the correct software version appears on the LCD. (The LCD cycles through the IP address, node name, and software version.)

Step 7 If the LCD shows the correct software version, continue with Step 8. If the LCD does not show the correct software version, upgrade the software or remove the TCC2 card and install a replacement card.

To replace the software, refer to the specific software upgrade document for your release.

Step 8 Open the latches/ejectors of the redundant TCC2 card.

Step 9 Use the latches/ejectors to firmly slide the card along the guide rails until the card plugs into the receptacle at the back of the slot (Slot 7 or 11).

Step 10 Verify that the card is inserted correctly and close the latches/ejectors on the card.

Note It is possible to close the latches/ejectors when the card is not completely plugged into the back panel of the shelf assembly. Ensure that you cannot insert the card any further.

Step 11 Verify the LED activity of the redundant TCC2 card:

- All LEDs turn on for a short moment.
- The red FAIL LED, the yellow ACT/STBY LED, the red REM LED, the green SYNC LED, and the green ACO LED turn on for about 10 seconds.
- The red FAIL LED and the green ACT/STBY LED turn on for about 40 seconds.
- The red FAIL LED blinks for about 10 seconds.
- The red FAIL LED turns on for about 5 seconds.
- All LEDs (including the CRIT, MAJ, MIN, REM, SYNC, and ACO LEDs) blink once and turn off for about 10 seconds.
- The ACT/STBY LED turns on. (The ACT/STBY LED might take several minutes to turn on while the DCC processor boots.)

Tip If you install a standby TCC2 card that has a different software version than the active TCC card, the newly installed standby TCC2 card automatically copies the software version from the active TCC2 card. You do not need to do anything in this situation. However, the loading TCC2 card does not boot up in the normal manner. When the standby card is first inserted, the LEDs follow most of the sequence listed in Step 11. After the red FAIL LED turns on for about 5 seconds, the FAIL LED and the ACT/STBY LED begin to flash alternately for up to 30 minutes while the new software loads onto the active TCC2 card. After loading the new software, the upgraded TCC2 card's LEDs repeat the sequence from Step 11, and the amber ACT/STBY LED turns on.

Note If you insert a card into a slot provisioned for a different card, all LEDs turn off.

Note Alarm LEDs might be on; disregard alarm LEDs until you are logged into CTC and can view the Alarms tab.

Step 12 Verify that the ACT/STBY LED is amber for standby.

Step 13 Return to your originating procedure (NTP).

DLP-G34 Install the AIC or AIC-I Card

Purpose	This task installs the AIC or AIC-I card. The AIC or AIC-I card provides connections for external alarms and controls (environmental alarms).
Tools/Equipment	AIC or AIC-I card
Prerequisite Procedures	DLP-G33 Install the TCC2 Card, page 1-73
Required/As Needed	As needed
Onsite/Remote	Onsite
Security Level	None

Note When installing cards, allow each card to boot completely before installing the next card.

Note The AIC card is not compatible with the ONS 15454 ETSI. The ONS 15454 ETSI supports the AIC-I card.

Step 1 Open the latches/ejectors on the card.

Step 2 Use the latches/ejectors to firmly slide the card along the guide rails until the card plugs into the receptacle at the back of the slot (Slot 9).

Step 3 Verify that the card is inserted correctly and close the latches/ejectors on the card.

Note It is possible to close the latches/ejectors when the card is not completely plugged into the backplane. Ensure that you cannot insert the card any further.

Step 4 If you have installed the AIC card, verify the following:

- The red FAIL LED turns on for 1 second, then blinks for 1 to 5 seconds.
- After 1 to 5 seconds, all LEDs blink once and turn off.
- The ACT LED turns on.

Step 5 If you have installed the AIC-I card, verify the following:

- The red FAIL LED turns on for 1 second, then blinks for 1 to 5 seconds.
- The PWR A and PWR B LEDs become red and the two INPUT/OUTPUT LEDs become green for approximately 3 seconds.
- The PWR A LED turns green, the INPUT/OUTPUT LEDs turn off, and the ACT LED turns on.

Note It might take up to 3 minutes for the PWR A and PWR B LEDs to update.

Note If the red FAIL LED does not turn on, check the power.

Note If you insert a card into a slot provisioned for a different card, no LEDs turn on.

Note If the red FAIL LED is on continuously or the LEDs act erratically, the card is not installed properly. Remove the card and repeat Steps 1 to 5.

Step 6 Return to your originating procedure (NTP).

NTP-G16 Perform the Shelf Installation Acceptance Test

Purpose	Use this procedure to perform a shelf installation acceptance test for the ONS 15454 ETSI and ONS 15454 ANSI.
Tools/Equipment	Voltmeter Oval and/or block ferrites
Prerequisite Procedures	Applicable procedures in Chapter 1, "Install the Shelf and Common Control Cards"
Required/As Needed	Required
Onsite/Remote	Onsite
Security Level	None

Step 1 If you installed an ONS 15454 ETSI shelf, complete Table 1-12 by verifying that each applicable procedure was completed.

Table 1-12 ONS 15454 ETSI Shelf Installation Task Summary

Description	Completed
NTP-G1 Unpack and Inspect the Shelf Assembly, page 1-6	
NTP-G2 Install the Shelf Assembly, page 1-8	
NTP-G3 Open and Remove the Front Door, page 1-20	
NTP-G4 Open and Remove the FMEC Cover (ETSI Only), page 1-23	
NTP-G6 Install the MIC-A/P and MIC-T/C/P FMECs (ETSI Only), page 1-27	
NTP-G7 Install the Power and Ground, page 1-30	
NTP-G8 Install the Fan-Tray Assembly, page 1-40	
NTP-G10 Attach Wires to Alarm, Timing, LAN, and Craft Pin Connections, page 1-47	
NTP-G12 Install and Close the FMEC Cover (ETSI Only), page 1-63	
NTP-G14 Install DWDM Equipment, page 1-66	
NTP-G15 Install the Common Control Cards, page 1-72	

Step 2 If you installed an ONS 15454 ANSI shelf, complete Table 1-13 by verifying that each applicable procedure was completed.

Table 1-13 ONS 15454 ANSI Shelf Installation Task Summary

Description	Completed
NTP-G1 Unpack and Inspect the Shelf Assembly, page 1-6	
NTP-G2 Install the Shelf Assembly, page 1-8	
NTP-G3 Open and Remove the Front Door, page 1-20	
NTP-G5 Remove the Backplane Covers (ANSI Only), page 1-26	
NTP-G7 Install the Power and Ground, page 1-30	
NTP-G8 Install the Fan-Tray Assembly, page 1-40	
NTP-G9 Install the Alarm Expansion Panel (ANSI Only), page 1-44	
NTP-G10 Attach Wires to Alarm, Timing, LAN, and Craft Pin Connections, page 1-47	
NTP-G11 Install an External Wire-Wrap Panel on the AEP (ANSI Only), page 1-59	
NTP-G13 Install the Rear Cover (ANSI Only), page 1-65	
NTP-G14 Install DWDM Equipment, page 1-66	
NTP-G15 Install the Common Control Cards, page 1-72	

Step 3 Complete the "DLP-G35 Inspect the Shelf Installation and Connections" task on page 1-78.

Step 4 Complete the "DLP-G36 Measure Voltage" task on page 1-79.

Step 5 Continue with Chapter 2, "Connect the PC and Log into the GUI."

Stop. You have completed this procedure.

DLP-G35 Inspect the Shelf Installation and Connections

Purpose	Use this task to inspect the shelf installation and connections and verify that everything is installed and connected properly.
Tools/Equipment	None
Prerequisite Procedures	Complete Table 1-12 on page 1-77 (ETSI) or Table 1-13 on page 1-78 (ANSI).
Required/As Needed	Required
Onsite/Remote	Onsite
Security Level	None

Step 1 Check each wire and cable connection to make sure all cables are locked securely. If a wire or cable is loose, return to the appropriate procedure in this chapter to correct it.

Step 2 To check that the front door is seated correctly, verify that it can be easily closed without disturbing fiber or Ethernet patch cords.

Step 3 To check that the FMEC cover is seated correctly, verify that it can be easily closed without disturbing cables.

Step 4 Return to your originating procedure (NTP).

DLP-G36 Measure Voltage

Purpose	Use this task to measure the power to verify correct power and returns.
Tools/Equipment	Voltmeter
Prerequisite Procedures	Complete Table 1-12 on page 1-77 (ESTSI) or Table 1-13 on page 1-78 (ANSI).
Required/As Needed	Required
Onsite/Remote	Onsite
Security Level	None

Step 1 Using a voltmeter, verify the office ground and power:

a. Place the black lead (positive) on the frame ground on the bay. Hold it there while completing Step b.

b. Place the red lead (negative) on the fuse power points on the third-party power distribution panel to verify that they read between –40.5 VDC and –57 VDC (power) and 0 (return ground).

Step 2 Using a voltmeter, verify the shelf ground and power wiring:

a. Place the black lead (positive) on the RET1 and the red lead on the BAT1 point. Verify a reading between –40.5 VDC and –57 VDC. If there is no voltage, check the following and correct if necessary:

- Battery and ground are reversed to the shelf.
- Battery is open or missing.
- Return is open or missing.

Step 3 Repeat Step 1 and Step 2 for the RET2 and BAT2 of the redundant power supply input.

Step 4 Return to your originating procedure (NTP).

Connect the PC and Log into the GUI

This chapter explains how to connect PCs and workstations to the Cisco ONS 15454 and how to log into Cisco Transport Controller (CTC) software, which is the ONS 15454 Operation, Administration, Maintenance and Provisioning (OAM&P) user interface. Procedures for connecting to the ONS 15454 ANSI using TL1 are provided in the *Cisco ONS 15454 and Cisco ONS 15327 TL1 Command Guide, Release 4.6*.

Note Unless otherwise specified, "ONS 15454" refers to both ANSI and ETSI shelf assemblies.

Before You Begin

This section lists the chapter procedures (NTPs). Turn to a procedure for applicable tasks (DLPs).

1. NTP-G17 Set Up Computer for CTC, page 2-2—Complete this procedure if your PC or workstation has never been connected to an ONS 15454.
2. NTP-G18 Set Up CTC Computer for Local Craft Connection to the ONS 15454, page 2-9—Complete this procedure to set up your computer for an onsite craft connection to the ONS 15454.
3. NTP-G19 Set Up a CTC Computer for a Corporate LAN Connection to the ONS 15454, page 2-20—Complete this procedure to set up your computer to connect to the ONS 15454 using a corporate LAN.
4. NTP-G20 Set Up a Remote Access Connection to the ONS 15454, page 2-22—Complete this procedure to set up your computer for remote modem access to the ONS 15454.
5. NTP-G21 Log into the ONS 15454 GUI, page 2-23—Complete this procedure to log into CTC.

NTP-G17 Set Up Computer for CTC

Purpose	This procedure configures your PC or UNIX workstation to run CTC.
Tools/Equipment	Cisco ONS 15454 Release 4.7 software or documentation CD
Prerequisite Procedures	DLP-G33 Install the TCC2 Card, page 1-73
Required/As Needed	Required
Onsite/Remote	Onsite or remote
Security Level	None

Note JRE 1.4.2 is required to log into nodes running Release 4.7. To log into nodes running Release 4.5 or earlier, you must uninstall JRE 1.4.1 and install JRE 1.3.1_2.

Step 1 If your computer does not have an appropriate browser installed, complete the following:

- To install Netscape 7.x, download the browser at the following site: http://channels.netscape.com/ns/browsers/default.jsp
- To install Internet Explorer 6.x on a PC, download the browser at the following site: http://www.microsoft.com

Step 2 If your computer is a Windows PC, complete the "DLP-G37 Run the CTC Installation Wizard for Windows" task on page 2-3, then go to Step 4.

Step 3 If your computer is a UNIX workstation, complete the "DLP-G38 Run the CTC Installation Wizard for UNIX" task on page 2-6.

Step 4 When your PC or workstation is set up, continue with the setup procedure appropriate to your network:

- NTP-G18 Set Up CTC Computer for Local Craft Connection to the ONS 15454, page 2-9
- NTP-G19 Set Up a CTC Computer for a Corporate LAN Connection to the ONS 15454, page 2-20
- NTP-G20 Set Up a Remote Access Connection to the ONS 15454, page 2-22

Note Cisco recommends that you configure your browser to disable the caching of user IDs/passwords on computers used to access Cisco optical equipment.

In Internet Explorer, choose **Tools > Internet Options > Content**. Click **Auto Complete** and uncheck the **User names and passwords on forms** option.

In Netscape 7.0, choose **Edit > Preferences > Privacy & Security > Forms** and uncheck the option to save form data. For passwords, choose **Edit > Preferences > Privacy & Security > Passwords** and uncheck the option to remember passwords. Note that passwords can be stored in an encrypted format. Netscape versions earlier than 6.0 do not cache user IDs and passwords.

Stop. You have completed this procedure.

DLP-G37 Run the CTC Installation Wizard for Windows

Purpose	This task installs the CTC online user manuals, Acrobat Reader 6.0.1, and JRE 1.4.2 on a Windows computer, as necessary. JRE 1.4.2 is required to run Release 4.7.
Tools/Equipment	Cisco ONS 15454 Release 4.7 software or documentation CD
Prerequisite Procedures	None
Required/As Needed	This task is required if you will use a Windows computer to run CTC and if any one of the following is true: • JRE 1.4.2 is not installed. • CTC online user manuals are not installed and are needed.
Onsite/Remote	Onsite or remote
Security Level	None

Note If you will log into nodes running CTC software earlier than Release 4.6, uninstall JRE 1.4.2 and reinstall JRE 1.3.1_2. To run R4.7, uninstall JRE 1.3.1_2 and reinstall JRE 1.4.2.

Note JRE 1.4.2 requires Netscape 7.x or Internet Explorer 6.x

Step 1 Verify that your computer has the following:

- Processor—Pentium III, 700 Mhz or faster
- RAM—384 MB recommended, 512 MB optimum
- Hard drive—20 GB hard drive recommended with at least 50 MB of space available
- Operating system—Windows 98 (1st and 2nd editions), Windows NT 4.0 (with Service Pack 6a), Windows 2000 (with Service Pack 3), or Windows XP Home

  If your operating system is Windows NT 4.0, verify that Service Pack 6a or later is installed. From the Start menu, choose **Programs > Administrative Tools > Windows NT Diagnostics** and check the service pack on the Version tab of the Windows NT Diagnostics dialog box. If Service Pack 6a or later is not installed, do not continue. Install Service Pack 6a following the computer upgrade procedures for your site.

  Note Processor and RAM requirements are guidelines. CTC performance is faster if your computer has a faster processor and more RAM.

Step 2 Insert the Cisco ONS 15454 Release 4.7 software or documentation CD into your computer CD drive. The installation program begins running automatically. If it does not start, navigate to the CD directory and double-click **setup.exe**.

The Cisco Transport Controller Installation Wizard displays the components that will be installed on your computer:

- Java Runtime Environment 1.4.2
- Acrobat Reader 6.0.1
- Online User Manuals

Step 3 Click **Next**.

Step 4 Complete one of the following:

- Click **Typical** to install both the Java Runtime Environment and online user manuals. If you already have JRE 1.4.2 installed on your computer, choose **Custom**.
- Click **Custom** if you want to install either the JRE or the online user manuals. By default, Acrobat Reader and the online user manuals are selected.

Step 5 Click **Next**.

Step 6 Complete the following, as applicable:

- If you selected Typical in Step 4, skip this step and continue with Step 7.
- If you selected Custom in Step 4, check the CTC component that you want to install and click **Next**.
  - If you selected Online User Manuals, continue with Step 7.
  - If you did not select Online User Manuals, continue with Step 9.

Step 7 The directory where the installation wizard will install the CTC online user manuals appears. The default is C:\Program Files\Cisco\CTC\Documentation.

- If you want to change the CTC online user manuals directory, type the new directory path in the Directory Name field, or click **Browse** to navigate to the directory.
- If you do not want to change the directory, skip this step.

Step 8 Click **Next**.

Step 9 Review the components that will be installed. If you want to change the components, complete one of the following:

- If you selected Typical in Step 4, click **Back** twice to return to the installation setup type panel. Choose **Custom** and repeat Steps 5 through 8.
- If you selected Custom in Step 4, click **Back** once or twice (depending on the components selected) until the component selection panel appears. Repeat Steps 6 through 8.

Step 10 Click **Next**. It might take a few minutes for the JRE installation wizard to appear. If you selected Custom in Step 4 and did not check Java Runtime Environment 1.4.2, continue with Step 12.

Step 11 To install the JRE, complete the following:

a. In the Java 2 Runtime Environment License Agreement dialog box, view the license agreement and choose one of the following:

- I accept the terms of the license agreement—Accepts the license agreement. Continue with Step b.
- I do not accept the terms of the license agreement—Disables the Next button on the Java 2 Runtime Environment License Agreement dialog box. Click **Cancel** to return to the CTC installation wizard. CTC will not install the JRE. Continue with Step 12.

Note If JRE 1.4.2 is already installed on your computer, the License Agreement panel does not appear. You must click Next and then choose Modify to change the JRE installation or Remove to uninstall the JRE. If you choose Modify and click Next, continue with Step e. If you choose Remove and click Next, continue with Step i.

b. Click **Next**.

c. Choose one of the following:

- Click **Typical** to install all JRE features. If you select Typical, the JRE version installed will automatically become the default JRE version for your browsers.
- Click **Custom** if you want to select the components to install and select the browsers that will use the JRE version.

d. Click **Next**.

e. If you selected Typical, continue with Step i. If you selected Custom, click the drop-down list for each program feature that you want to install and choose the desired setting. The program features include:

- Java 2 Runtime Environment—(Default) Installs JRE 1.4.2 with support for European languages.
- Support for Additional Languages—Adds support for non-European languages.
- Additional Font and Media Support—Adds Lucida fonts, Java Sound, and color management capabilities.

The drop-down list options for each program feature include:

- This feature will be installed on the local hard drive—Installs the selected feature.
- This feature and all subfeatures will be installed on the local hard drive—Installs the selected feature and all subfeatures.
- Don't install this feature now—Does not install the feature (not an option for Java 2 Runtime Environment).

To modify the directory where the JRE version is installed, click **Change**, navigate to the desired directory, and click **OK**.

f. Click **Next**.

g. In the Browser Registration dialog box, check the browsers that you want to register with the Java Plug-In. The JRE version will be the default for the selected browsers. It is acceptable to leave both browser check boxes unchecked.

Note Setting the JRE as the default for these browsers might cause problems with these browsers.

h. Click **Next**.

i. Click **Finish**.

Note If you are uninstalling the JRE, click **Remove**.

Step 12 In the Cisco Transport Controller Installation Wizard, click **Next**. The online user manuals are installed.

Step 13 Click **Finish**.

Step 14 Return to your originating procedure (NTP).

DLP-G38 Run the CTC Installation Wizard for UNIX

Purpose	This task installs the CTC online user manuals, Acrobat 6.0.1, and JRE 1.4.2 on UNIX workstations, as necessary. JRE 1.4.2 is required to run Release 4.7.
Tools/Equipment	Cisco ONS 15454 Release 4.7 software or documentation CD
Prerequisite Procedures	None
Required/As Needed	This task is required if you will use a UNIX workstation to run CTC and any of the following are true: • JRE 1.4.2 is not installed. • CTC online user manuals are not installed and are needed.
Onsite/Remote	Onsite or remote
Security Level	None

Note If you will log into nodes running CTC software earlier than Release 4.6, uninstall JRE 1.4.2 and reinstall JRE 1.3.1_2. To run R4.7, uninstall JRE 1.3.1_2 and reinstall JRE 1.4.2.

Note JRE 1.4.2 requires Netscape 7.x or Internet Explorer 6.x.

Step 1 Verify that your computer has the following:

- RAM—384 MB recommended, 512 MB optimum
- Hard drive—20 GB hard drive recommended with at least 50 MB of space available
- Operating system—Solaris 8 or 9

Note These requirements are guidelines. CTC performance is faster if your computer has a faster processor and more RAM.

Step 2 Change the directory; type:

cd /cdrom/cdrom0/

Step 3 From the techdoc454 CD directory, type:

./setup.bat

The Cisco Transport Controller Installation Wizard displays the components that will be installed on your computer:

- Java Runtime Environment 1.4.2
- Acrobat Reader 6.0.1
- Online User Manuals

Step 4 Click **Next**.

Step 5 Complete one of the following:

- Click **Typical** to install both the Java Runtime Environment and online user manuals. If you already have JRE 1.4.2 installed on your computer, choose **Custom**.

- Click **Custom** if you want to install either the JRE or the online user manuals.

Step 6 Click **Next**.

Step 7 Complete the following, as applicable:

- If you selected Typical in Step 5, continue with Step 8.
- If you selected Custom in Step 5, check the CTC component that you want to install and click **Next**.
  - If you selected Online User Manuals, continue with Step 8.
  - If you did not select Online User Manuals, continue with Step 10.

Step 8 The directory where the installation wizard will install the CTC online user manuals appears. The default is /usr/doc/ctc.

- If you want to change the CTC online user manuals directory, type the new directory path in the Directory Name field, or click **Browse** to navigate to the directory.
- If you do not want to change the CTC online user manuals directory, skip this step.

Step 9 Click **Next**.

Step 10 Review the components that will be installed.

- If you selected Typical in Step 5, click **Back** twice to return to the installation setup type panel. Choose **Custom** and repeat Steps 6 through 9.
- If you selected Custom in Step 5, click **Back** once or twice (depending on the components selected) you reach the component selection panel and check the desired components. Repeat Steps 7 through 9.

Step 11 Click **Next**. It might take a few minutes for the JRE installation wizard to appear. If you selected Custom in Step 4 and did not check Java Runtime Environment 1.4.2, continue with Step 13.

Step 12 To install the JRE, complete the following:

a. In the Java 2 Runtime Environment License Agreement dialog box, view the license agreement and choose one of the following:

- I accept the terms of the license agreement—Accepts the license agreement. Continue with Step b.
- I do not accept the terms of the license agreement—Disables the Next button on the Java 2 Runtime Environment License Agreement dialog box. Click **Cancel** to return to the CTC installation wizard. CTC will not install the JRE. Continue with Step 13.

Note If JRE 1.4.2 is already installed on your computer, the License Agreement panel does not appear. You must click Next and then choose Modify to change the JRE installation or Remove to uninstall the JRE. If you choose Modify and click Next, continue with Step e. If you choose Remove and click Next, continue with Step i.

b. Click **Next**.

c. Choose one of the following:

- Click **Typical** to install all JRE features. If you select Typical, the JRE version installed will automatically become the default JRE version for your browsers.
- Click **Custom** if you want to select the components to install and select the browsers that will use the JRE version.

d. Click **Next**.

e. If you selected Typical, continue with Step i. If you selected Custom, click the drop-down list for each program feature that you want to install and choose the desired setting. The program features include:

- Java 2 Runtime Environment—(Default) Installs JRE 1.4.2 with support for European languages.
- Support for Additional Languages—Adds support for non-European languages.
- Additional Font and Media Support—Adds Lucida fonts, Java Sound, and color management capabilities.

The drop-down list options for each program feature include:

- This feature will be installed on the local hard drive—Installs the selected feature.
- This feature and all subfeatures will be installed on the local hard drive—Installs the selected feature and all subfeatures.
- Don't install this feature now—Does not install the feature (not an option for Java 2 Runtime Environment).

To modify the directory where the JRE version is installed, click **Change**, navigate to the desired directory, and click **OK**.

f. Click **Next**.

g. In the Browser Registration dialog box, check the browsers that you want to register with the Java Plug-In. The JRE version will be the default for the selected browsers. It is acceptable to leave both browser check boxes unchecked.

Note Setting the JRE version as the default for these browsers might cause problems with these browsers.

h. Click **Next**.

i. Click **Finish**.

Note If you are uninstalling the JRE, click **Remove**.

Step 13 In the Cisco Transport Controller Installation Wizard, click **Next**. The online user manuals are installed.

Step 14 Click **Finish**.

Note Be sure to record the names of the directories you choose for JRE and the online user manuals.

Step 15 Return to your originating procedure (NTP).

NTP-G18 Set Up CTC Computer for Local Craft Connection to the ONS 15454

Purpose	This procedure explains how to set up a PC running Windows or a Solaris workstation for an onsite local craft connection to the ONS 15454.
Tools/Equipment	Depends on connection type
Prerequisite Procedures	NTP-G17 Set Up Computer for CTC, page 2-2
Required/As Needed	As needed
Onsite/Remote	Onsite or remote
Security Level	None

Step 1 Complete one of the CTC computer setup tasks shown in Table 2-1 based your CTC connection environment.

Table 2-1 CTC Computer Setup for Local Craft Connections to the ONS 15454

CTC Connection Environment	CTC Computer Setup Task
• You are connecting from a Windows PC. • All nodes that you will access run software earlier than Release 3.3. • You will connect to one ONS 15454. • You need to access non-ONS 15454 applications such as ping and tracert (trace route).	DLP-G39 Set Up a Windows PC for Craft Connection to an ONS 15454 on the Same Subnet Using Static IP Addresses, page 2-11
• You are connecting from a Windows PC. • The CTC computer is provisioned for Dynamic Host Configuration Protocol (DHCP). • The ONS 15454 has DHCP forwarding enabled. • The ONS 15454 is connected to a DHCP server. **Note** The ONS 15454 does not provide IP addresses. If DHCP is enabled, it passes DCHP requests to an external DHCP server.	DLP-G40 Set Up a Windows PC for Craft Connection to an ONS 15454 Using Dynamic Host Configuration Protocol, page 2-13 **Note** Do not use this task for initial node turn-up. Use the task only if DHCP forwarding is enabled on the ONS 15454. By default, DHCP is not enabled. To enable it, see the "NTP-G26 Set Up CTC Network Access" procedure on page 3-8.

Table 2-1 CTC Computer Setup for Local Craft Connections to the ONS 15454

CTC Connection Environment	CTC Computer Setup Task (continued)
• You are connecting from a Windows PC. • All nodes that you will access run software Release 3.3 or later. • You will connect to ONS 15454s at different locations and times and do not wish to reconfigure your PC's IP settings each time. • You will not access or use non-ONS 15454 applications such as ping and tracert (trace route). • If you are using an ANSI shelf, you will connect to the TCC2 Ethernet port or backplane LAN pins either directly or through a hub. • If you are using an ETSI shelf, you will connect to the ONS 15454 Ethernet port or the RJ-45 jack on the MIC-C/T/P FMEC either directly or through a hub.	DLP-G41 Set Up a Windows PC for Craft Connection to an ONS 15454 Using Automatic Host Detection, page 2-15
• You are connecting from a Solaris workstation. • You will connect to one ONS 15454. • You need to access non-ONS 15454 applications such as ping and tracert (trace route).	DLP-G42 Set Up a Solaris Workstation for a Craft Connection to an ONS 15454, page 2-18

Step 2 After setting up your CTC computer, continue with the "NTP-G21 Log into the ONS 15454 GUI" procedure on page 2-23 as needed.

Stop. You have completed this procedure.

DLP-G39 Set Up a Windows PC for Craft Connection to an ONS 15454 on the Same Subnet Using Static IP Addresses

Purpose	This task sets up your computer for a local craft connection to the ONS 15454 when: • You will access nodes running software releases earlier than Software Release 3.3. • You will connect to one ONS 15454; if you will connect to multiple ONS 15454s, you might need to reconfigure your computer's IP settings each time you connect to an ONS 15454. • You need to use non-ONS 15454 applications such as ping and tracert (trace route).
Tools/Equipment	Network interface card (NIC), also referred to as an Ethernet card
Prerequisite Procedures	NTP-G17 Set Up Computer for CTC, page 2-2
Required/As Needed	As needed
Onsite/Remote	Onsite
Security Level	None

Step 1 Verify the operating system that is installed on your computer:

a. From the Windows Start menu, choose **Settings > Control Panel**.

b. In the Control Panel window, double-click the **System** icon.

c. On the General tab of the System Settings window, verify that the Windows operating system is one of the following: Windows 98, Windows NT 4.0, Windows 2000, or Windows XP.

Step 2 According to the Windows operating system installed on your computer, perform one of the following steps:

- For Windows 98, complete Step 3.
- For Windows NT 4.0, complete Step 4.
- For Windows 2000, complete Step 5.
- For Windows XP, complete Step 6.

Step 3 If you have Windows 98 installed on your PC, complete the following steps to change its TCP/IP configuration:

a. From the Windows Start menu, choose **Settings > Control Panel**.

b. In the Control Panel dialog box, click the **Network** icon.

c. In the Network dialog box, choose **TCP/IP** for your NIC card, then click **Properties**.

d. In the TCP/IP Properties dialog box, click the **DNS Configuration** tab and choose **Disable DNS**.

e. Click the **WINS Configuration** tab and choose **Disable WINS Resolution**.

f. Click the **IP Address** tab.

g. In the IP Address window, click **Specify an IP address**.

h. In the IP Address field, enter an IP address that is identical to the ONS 15454 IP address except for the last octet. The last octet must be 1 or 3 through 254. This IP address appears on the LCD unless its display is suppressed during node provisioning.

i. In the Subnet Mask field, type the same subnet mask as the ONS 15454. The default is **255.255.255.0** (24 bit).

j. Click **OK**.

k. In the TCP/IP dialog box, click the **Gateway** tab.

l. In the New Gateway field, type the ONS 15454 IP address. Click **Add**.

m. Verify that the IP address appears in the Installed Gateways field, then click **OK**.

n. When the prompt to restart your PC appears, click **Yes**.

Step 4 If you have Windows NT 4.0 installed on your PC, complete the following steps to change its TCP/IP configuration:

a. From the Windows Start menu, choose **Settings > Control Panel**.

b. In the Control Panel dialog box, click the **Network** icon.

c. In the Network dialog box, click the **Protocols** tab, choose **TCP/IP Protocol**, then click **Properties**.

d. Click the **IP Address** tab.

e. In the IP Address window, click **Specify an IP address**.

f. In the IP Address field, enter an IP address that is identical to the ONS 15454 IP address shown on the ONS 15454 LCD except for the last octet. The last octet must be 1 or 3 through 254.

g. In the Subnet Mask field, type **255.255.255.0**.

h. Click **Advanced**.

i. In the Gateways List, click **Add**. The TCP/IP Gateway Address dialog box appears.

j. Type the ONS 15454 IP address in the Gateway Address field.

k. Click **Add**.

l. Click **OK**.

m. Click **Apply**.

n. In some cases, Windows NT 4.0 prompts you to reboot your PC. If you receive this prompt, click **Yes**.

Step 5 If you have Windows 2000 installed on your PC, complete the following steps to change its TCP/IP configuration:

a. From the Windows Start menu, choose **Settings > Network and Dial-up Connections > Local Area Connection**.

b. In the Local Area Connection Status dialog box, click **Properties**.

c. On the General tab, choose **Internet Protocol (TCP/IP)**, then click **Properties**.

d. Click **Use the following IP address**.

e. In the IP Address field, enter an IP address that is identical to the ONS 15454 IP address shown on the ONS 15454 LCD except for the last octet. The last octet must be 1 or 3 through 254.

f. In the Subnet Mask field, type **255.255.255.0**.

g. In the Default Gateway field, type the ONS 15454 IP address.

h. Click **OK**.

i. In the Local Area Connection Properties dialog box, click **OK**.

j. In the Local Area Connection Status dialog box, click **Close**.

Step 6 If you have Windows XP installed on your PC, complete the following steps to change its TCP/IP configuration:

a. From the Windows Start menu, choose **Control Panel > Network Connections**.

Note If the Network Connections menu is not available, click **Switch to Classic View**.

b. From the Network Connections dialog box, click the **Local Area Connection** icon.

c. From the Local Area Connection Properties dialog box, choose **Internet Protocol (TCP/IP)**, then click **Properties**.

d. In the IP Address field, enter an IP address that is identical to the ONS 15454 IP address shown on the ONS 15454 LCD except for the last octet. The last octet must be 1 or 3 through 254.

e. In the Subnet Mask field, type **255.255.255.0**.

f. In the Default Gateway field, type the ONS 15454 IP address.

g. Click **OK**.

h. In the Local Area Connection Properties dialog box, click **OK**.

i. In the Local Area Connection Status dialog box, click **Close**.

Step 7 Return to your originating procedure (NTP).

DLP-G40 Set Up a Windows PC for Craft Connection to an ONS 15454 Using Dynamic Host Configuration Protocol

Purpose	This task sets up your computer for craft connection to the ONS 15454 using DHCP.
Tools/Equipment	Straight-through (CAT-5) LAN cable NIC
Prerequisite Procedures	NTP-G17 Set Up Computer for CTC, page 2-2 NTP-G26 Set Up CTC Network Access, page 3-8
Required/As Needed	As needed
Onsite/Remote	Onsite
Security Level	None

Note Do not use this task for initial node turn-up. Use the task only if DHCP forwarding is enabled on the ONS 15454. By default, DHCP is not enabled. To enable it, see the "NTP-G26 Set Up CTC Network Access" procedure on page 3-8.

Note The ONS 15454 does not provide the IP addresses. If DHCP forwarding is enabled, it passes DCHP requests to an external DHCP server.

Step 1 Verify the operating system that is installed on your computer:

a. From the Windows Start menu, choose **Settings > Control Panel**.

b. In the Control Panel window, double-click the **System** icon.

c. On the General tab of the System Settings window, verify that the Windows operating system is one of the following: Windows 98, Windows NT 4.0, Windows 2000, or Windows XP.

Step 2 According to the Windows operating system installed on your computer, perform one of the following steps:

- For Windows 98, complete Step 3.
- For Windows NT 4.0, complete Step 4.
- For Windows 2000, complete Step 5.
- For Windows XP, complete Step 6.

Step 3 If you have Windows 98 installed on your PC, complete the following steps to change its TCP/IP configuration:

a. From the Windows Start menu, choose **Settings** > **Control Panel**.

b. In the Control Panel dialog box, click the **Network** icon.

c. In the Network dialog box, select **TCP/IP** for your NIC, then click **Properties**.

d. In the TCP/IP Properties dialog box, click the **DNS Configuration** tab and choose **Disable DNS**.

e. Click the **WINS Configuration** tab and choose **Disable WINS Resolution**.

f. Click the **IP Address** tab.

g. In the IP Address window, click **Obtain an IP address automatically**.

h. Click **OK**.

i. When the prompt to restart your PC appears, click **Yes**.

Step 4 If you have Windows NT 4.0 installed on your PC, complete the following steps to change its TCP/IP configuration:

a. From the Windows Start menu, choose **Settings** > **Control Panel**.

b. In the Control Panel dialog box, click the **Network** icon.

c. In the Network dialog box, click the **Protocols** tab, choose **TCP/IP Protocol**, then click **Properties**.

d. Click the **IP Address** tab.

e. In the IP Address window, click **Obtain an IP address from a DHCP server**.

f. Click **OK**.

g. Click **Apply**.

h. If Windows prompts you to restart your PC, click **Yes**.

Step 5 If you have Windows 2000 installed on your PC, complete the following steps to change its TCP/IP configuration:

a. From the Windows Start menu, choose **Settings** > **Network and Dial-up Connections > Local Area Connection**.

b. In the Local Area Connection Status dialog box, click **Properties**.

c. On the General tab, choose **Internet Protocol (TCP/IP)**, then click **Properties**.

d. Click **Obtain an IP address from a DHCP server**.

e. Click **OK**.

f. In the Local Area Connection Properties dialog box, click **OK**.

g. In the Local Area Connection Status dialog box, click **Close**.

Step 6 If you have Windows XP installed on your PC, complete the following steps to change its TCP/IP configuration:

a. From the Windows Start menu, choose **Control Panel > Network Connections.**

Note If the Network Connections menu is not available, click **Switch to Classic View**.

b. In the Network Connections dialog box, click **Local Area Connection**.

c. In the Local Area Connection Status dialog box, click **Properties**.

d. On the General tab, choose **Internet Protocol (TCP/IP)**, then click **Properties**.

e. Click **Obtain an IP address from a DHCP server**.

f. Click **OK**.

g. In the Local Area Connection Properties dialog box, click **OK**.

h. In the Local Area Connection Status dialog box, click **Close**.

Step 7 Return to your originating procedure (NTP).

DLP-G41 Set Up a Windows PC for Craft Connection to an ONS 15454 Using Automatic Host Detection

Purpose	This task sets up your computer for local craft connection to the ONS 15454 when: • If you are using an ANSI shelf, you will connect to the ONS 15454 Ethernet port or backplane LAN pins either directly or through a hub. • If you are using an ETSI shelf, you will connect to the ONS 15454 Ethernet port or the RJ-45 jack on the MIC-C/T/P FMEC either directly or through a hub. • All nodes that you will access are running Software Release 3.3 or later. • You will connect to multiple ONS 15454s and do not want to reconfigure your IP address each time. • You do not need to access non-ONS 15454 applications such as ping and tracert (trace route).
Tools/Equipment	NIC
Prerequisite Procedures	NTP-G17 Set Up Computer for CTC, page 2-2
Required/As Needed	As needed
Onsite/Remote	Onsite
Security Level	None

Step 1 Verify the operating system that is installed on your computer:

a. From the Windows Start menu, choose **Settings > Control Panel**.

Note In Windows XP, you can select Control Panel directly from the Start menu. Make sure you are in Classic View before continuing with this procedure.

b. In the Control Panel window, double-click the **System** icon.

c. On the General tab of the System Settings window, verify that the Windows operating system is one of the following: Windows 98, Windows NT 4.0, Windows 2000, or Windows XP.

Step 2 According to the Windows operating system installed on your computer, perform one of the following steps:

- For Windows 98, complete Step 3.
- For Windows NT 4.0, complete Step 4.
- For Windows 2000, complete Step 5.
- For Windows XP, complete Step 6.

Step 3 If you have Windows 98 installed on your PC, complete the following steps to change its TCP/IP configuration:

a. From the Windows Start menu, choose **Settings** > **Control Panel**.

b. In the Control Panel dialog box, click the **Network** icon.

c. In the Network dialog box, select **TCP/IP** for your NIC, then click **Properties**.

d. In the TCP/IP Properties dialog box, click the **DNS Configuration** tab and choose **Disable DNS**.

e. Click the **WINS Configuration** tab and choose **Disable WINS Resolution**.

f. Click the **IP Address** tab.

g. In the IP Address window, click **Specify an IP address**.

h. In the IP Address field, enter any legitimate IP address other than the node IP address as indicated on the LCD of the ONS 15454. The default IP address is 192.1.0.2.

Note You can suppress the LCD IP address display using CTC. For more information, see the "DLP-G162 Change IP Settings" task on page 9-11.

i. In the Subnet Mask field, type the same subnet mask as the ONS 15454. The default is **255.255.255.0** (24 bit).

j. Click **OK**.

k. In the TCP/IP dialog box, click the **Gateway** tab.

l. In the New Gateway field, type the address entered in Step h. Click **Add**.

m. Verify that the IP address appears in the Installed Gateways field, then click **OK**.

n. When the prompt to restart your PC appears, click **Yes**.

Step 4 If you have Windows NT 4.0 installed on your PC, complete the following steps to change its TCP/IP configuration:

a. From the Windows Start menu, choose **Settings** > **Control Panel**.

b. In the Control Panel dialog box, click the **Network** icon.

c. In the Network dialog box, click the **Protocols** tab, choose **TCP/IP Protocol**, then click **Properties**.

d. Click the **IP Address** tab.

e. In the IP Address window, click **Specify an IP address**.

f. In the IP Address field, enter any legitimate IP address other than the node IP address as indicated on the LCD of the ONS 15454. The default IP address is 192.1.0.2.

Note You can suppress the LCD IP address display using CTC. For more information, see the "DLP-G162 Change IP Settings" task on page 9-11.

g. In the Subnet Mask field, type the same subnet mask as the ONS 15454. The default is **255.255.255.0** (24 bit).

h. Click **Advanced**.

i. In the Gateways List, click **Add**. The TCP/IP Gateway Address dialog box appears.

j. Type the IP address entered in Step f in the Gateway Address field.

k. Click **Add**.

l. Click **OK**.

m. Click **Apply**.

n. Reboot your PC.

Step 5 If you have Windows 2000 installed on your PC, complete the following steps to change its TCP/IP configuration:

a. From the Windows Start menu, choose **Settings > Network and Dial-up Connections > Local Area Connection**.

b. In the Local Area Connection Status dialog box, click **Properties**.

c. On the General tab, choose **Internet Protocol (TCP/IP)**, then click **Properties**.

d. Click **Use the following IP address**.

e. In the IP Address field, enter any legitimate IP address other than the node IP address as indicated on the LCD of the ONS 15454. The default IP address is 192.1.0.2.

Note You can suppress the LCD IP address display using CTC. For more information, see the "DLP-G162 Change IP Settings" task on page 9-11.

f. In the Subnet Mask field, type the same subnet mask as the ONS 15454. The default is **255.255.255.0** (24 bit).

g. Type the IP address entered in Step e in the Gateway Address field.

h. Click **OK**.

i. In the Local Area Connection Properties dialog box, click **OK**.

j. In the Local Area Connection Status dialog box, click **Close**.

Step 6 If you have Windows XP installed on your PC, complete the following steps to change its TCP/IP configuration:

a. From the Windows Start menu, choose **Control Panel > Network Connections**.

Note If the Network Connections menu is not available, click **Switch to Classic View**.

b. From the Network Connections dialog box, click the **Local Area Connection** icon.

c. From the Local Area Connection Properties dialog box, choose **Internet Protocol (TCP/IP)**, then click **Properties**.

d. In the IP Address field, enter any legitimate IP address other than the node IP address as indicated on the LCD of the ONS 15454. The default IP address is 192.1.0.2.

Note You can suppress the LCD IP address display using CTC. For more information, see the "DLP-G162 Change IP Settings" task on page 9-11.

e. In the Subnet Mask field, type the same subnet mask as the ONS 15454. The default is **255.255.255.0** (24 bit).

f. Type the IP address entered in Step d in the Gateway Address field.

g. Click **OK**.

h. In the Local Area Connection Properties dialog box, click **OK**.

i. In the Local Area Connection Status dialog box, click **Close**.

Step 7 Return to your originating procedure (NTP).

DLP-G42 Set Up a Solaris Workstation for a Craft Connection to an ONS 15454

Purpose	This task sets up a Solaris workstation for a craft connection to the ONS 15454.
Tools/Equipment	None
Prerequisite Procedures	NTP-G17 Set Up Computer for CTC, page 2-2
Required/As Needed	As needed
Onsite/Remote	Onsite
Security Level	None

Step 1 Log into the workstation as the root user.

Step 2 Check to see if the interface is plumbed by typing:

ifconfig *device*

For example:

ifconfig hme1

If the interface is plumbed, a message similar to the following appears:

hme1:flags=1000842<BROADCAST,RUNNING,MULTICAST,IPv4>mtu 1500 index 2 inet 0.0.0.0 netmask 0

If a message similar to this one appears, go to Step 4.

If the interface is not plumbed, a message similar to the following appears:

ifconfig: status: SIOCGLIFFLAGS: hme1: no such interface.

If a message similar to this one appears, go to Step 3.

Step 3 Plumb the interface by typing:

 # ifconfig *device* **plumb**

For example:

 # ifconfig hme1 plumb

Step 4 Configure the IP address on the interface by typing:

 # ifconfig *interface ip-address* **netmask** *netmask* **up**

For example:

ifconfig hme0 192.1.0.3 netmask 255.255.255.0 up

Note Enter an IP address that is identical to the ONS 15454 IP address except for the last octet. The last octet must be 1 or 3 through 254.

Step 5 In the Subnet Mask field, type **255.255.255.0**. Skip this step if you checked Craft Access Only on the Provisioning > Network > General > Gateway Settings tab.

Step 6 Test the connection:

a. Start Netscape Navigator.

b. Enter the ONS 15454 IP address in the web address (URL) field. If the connection is established, a Java Console window, CTC caching messages, and the Cisco Transport Controller Login dialog box appear. If this occurs, go to Step 2 of the "DLP-G46 Log into CTC" task on page 2-25 to complete the login. If the Login dialog box does not appear, complete Steps c and d.

c. At the prompt, type:

ping *ONS-15454-IP-address*

For example, to connect to an ONS 15454 with a default IP address of 192.1.0.2, type:

ping 192.1.0.2

If your workstation is connected to the ONS 15454, the following message appears:

IP-*address* is alive

Note Skip this step if you checked the Craft Access Only check box at Provisioning > Network > General > Gateway Settings.

d. If CTC is not responding, a "no answer from *x.x.x.x*" message appears. Verify the IP and subnet mask information. Check that the cables connecting the workstation to the ONS 15454 are securely attached. Check the link status by typing:

 # ndd -set /dev/*device* **instance 0**

 # ndd -get /dev/*device* **link_status**

For example:

 # ndd -set /dev/hme instance 0

 # ndd -get /dev/hme link_status

A result of "1" means the link is up. A result of "0" means the link is down.

Note Check the man page for ndd. For example, type: `# man ndd`.

Step 7 Return to your originating procedure (NTP).

NTP-G19 Set Up a CTC Computer for a Corporate LAN Connection to the ONS 15454

Purpose	This procedure sets up your computer to access the ONS 15454 through a corporate LAN.
Tools/Equipment	None
Prerequisite Procedures	• NTP-G17 Set Up Computer for CTC, page 2-2 • The ONS 15454 must be provisioned for LAN connectivity, including IP address, subnet mask, default gateway. • The ONS 15454 must be physically connected to the corporate LAN. • The CTC computer must be connected to the corporate LAN that has connectivity to the ONS 15454.
Required/As Needed	As needed
Onsite/Remote	Onsite or remote
Security Level	None

Step 1 If your computer is already connected to the corporate LAN, go to Step 2. If you changed your computer's network settings for craft access to the ONS 15454, change the settings back to the corporate LAN access settings. This generally means:

- Set the IP Address on the TCP/IP dialog box back to **Obtain an IP address automatically** (Windows 98) or **Obtain an IP address from a DHCP server** (Windows NT 4.0, 2000, or XP).
- If your LAN requires that Domain Name System (DNS) or Windows Internet Naming Service (WINS) be enabled, change the setting on the DNS Configuration or WINS Configuration tab of the TCP/IP dialog box.

Step 2 If your computer is connected to a proxy server, disable proxy service or add the ONS 15454 nodes as exceptions. To disable proxy service, complete one of the following tasks, depending on the web browser that you use:

- DLP-G43 Disable Proxy Service Using Internet Explorer (Windows), page 2-21
- DLP-G44 Disable Proxy Service Using Netscape (Windows and UNIX), page 2-21

Step 3 Continue with the "NTP-G21 Log into the ONS 15454 GUI" procedure on page 2-23.

Stop. You have completed this procedure.

DLP-G43 Disable Proxy Service Using Internet Explorer (Windows)

Purpose	This task disables proxy service for PCs running Internet Explorer.
Tools/Equipment	None
Prerequisite Procedures	NTP-G17 Set Up Computer for CTC, page 2-2
Required/As Needed	Required if your computer is connected to a network computer proxy server and your browser is Internet Explorer.
Onsite/Remote	Onsite or remote
Security Level	None

Step 1 From the Start menu, select **Settings > Control Panel**.

Note If your computer is running Windows XP, you can select Control Panel directly from the Start menu. Make sure that you are in Classic View before continuing with this procedure.

Step 2 In the Control Panel window, choose **Internet Options**.

Step 3 In the Internet Properties dialog box, click **Connections > LAN Settings**.

Step 4 In the LAN Settings dialog box, complete one of the following tasks:

- Uncheck **Use a proxy server** to disable the service.
- Leave **Use a proxy server** selected and click **Advanced**. In the Proxy Setting dialog box under Exceptions, enter the IP addresses of ONS 15454 nodes that you will access. Separate each address with a semicolon. You can insert an asterisk (*) for the host number to include all the ONS 15454s on your network. Click **OK** to close each open dialog box.

Step 5 Return to your originating procedure (NTP).

DLP-G44 Disable Proxy Service Using Netscape (Windows and UNIX)

Purpose	This task disables proxy service for PCs and UNIX workstations running Netscape.
Tools/Equipment	None
Prerequisite Procedures	NTP-G17 Set Up Computer for CTC, page 2-2
Required/As Needed	Required if your computer is connected to a network computer proxy server and your browser is Netscape.
Onsite/Remote	Onsite or remote
Security Level	None

Step 1 Open Netscape.

Step 2 From the Edit menu, choose **Preferences**.

Step 3 In the Preferences dialog box under Category, choose **Advanced > Proxies**.

Step 4 On the right side of the Preferences dialog box under Proxies, perform one of the following options:

- Choose **Direct connection to the Internet** to bypass the proxy server.
- Choose **Manual proxy configuration** to add exceptions to the proxy server, then click **View**. In the Manual Proxy Configuration dialog box under Exceptions, enter the IP addresses of the ONS 15454 nodes that you will access. Separate each address with a comma. Click **OK** to close each open dialog box.

Step 5 Return to your originating procedure (NTP).

NTP-G20 Set Up a Remote Access Connection to the ONS 15454

Purpose	This procedure connects the CTC computer to an ONS 15454 using a LAN modem. To complete this procedure: • A modem must be connected to the ONS 15454. • The modem must be provisioned for ONS 15454. To run CTC, the modem must be provisioned for Ethernet access.
Tools/Equipment	Modem and modem documentation
Prerequisite Procedures	NTP-G17 Set Up Computer for CTC, page 2-2
Required/As Needed	As needed
Onsite/Remote	Onsite
Security Level	None

Step 1 Connect the modem to the RJ-45 (LAN) port on the TCC2 card or to the LAN pins on the ONS 15454 backplane (ANSI only) or the RJ-45 jack on the MIC-C/T/P FMEC (ETSI only).

Step 2 While referring to the modem documentation, complete the following tasks to provision the modem for the ONS 15454:

- For CTC access, set the modem for Ethernet access.
- Assign an IP address to the modem that is on the same subnet as the ONS 15454.
- The IP address the modem assigns to the CTC computer must be on the same subnet as the modem and the ONS 15454.

Note For assistance on provisioning specific modems, contact the Cisco Technical Assistance Center (Cisco TAC).

Step 3 Continue with the "NTP-G21 Log into the ONS 15454 GUI" procedure on page 2-23.

Stop. You have completed this procedure.

NTP-G21 Log into the ONS 15454 GUI

Purpose	This procedure logs into CTC, the graphical user interface software used to manage the ONS 15454. This procedure includes optional node login tasks.
Tools/Equipment	None
Prerequisite Procedures	NTP-G17 Set Up Computer for CTC, page 2-2 One of the following procedures: • NTP-G18 Set Up CTC Computer for Local Craft Connection to the ONS 15454, page 2-9 • NTP-G19 Set Up a CTC Computer for a Corporate LAN Connection to the ONS 15454, page 2-20 • NTP-G20 Set Up a Remote Access Connection to the ONS 15454, page 2-22
Required/As Needed	As needed
Onsite/Remote	Onsite or remote
Security Level	Retrieve or higher

Step 1 If the computer does not have a physical connection to the ONS 15454 or corporate LAN, complete the "DLP-G45 Connect Computer to the ONS 15454" task on page 2-24 or the "NTP-G19 Set Up a CTC Computer for a Corporate LAN Connection to the ONS 15454" procedure on page 2-20.

Step 2 Complete the "DLP-G46 Log into CTC" task on page 2-25.

Note For information about navigating in CTC, see Appendix A, "CTC Information and Shortcuts."

Step 3 As needed, complete the "DLP-G48 Create Login Node Groups" task on page 2-29. Login node groups allow you to manage nodes that are not connected to the login node through a data communications channel (DCC).

Step 4 As needed, complete the "DLP-G49 Add a Node to the Current Session or Login Group" task on page 2-30.

Step 5 As needed, complete the "DLP-G50 Delete a Node from the Current Session or Login Group" task on page 2-31.

Step 6 As needed, complete the "DLP-G51 Delete a Node from a Specified Login Node Group" task on page 2-31.

Step 7 As needed, complete the "DLP-G52 Change the JRE Version" task on page 2-32.

Step 8 As needed, complete the "DLP-G53 Configure the CTC Alerts Dialog Box for Automatic Popup" task on page 2-33.

Stop. You have completed this procedure.

DLP-G45 Connect Computer to the ONS 15454

Purpose	This task physically connects a CTC computer to the ONS 15454.
Tools/Equipment	Straight-through (CAT-5) LAN cable NIC
Prerequisite Procedures	NTP-G17 Set Up Computer for CTC, page 2-2 and one of the following procedures: • NTP-G18 Set Up CTC Computer for Local Craft Connection to the ONS 15454, page 2-9, or • NTP-G19 Set Up a CTC Computer for a Corporate LAN Connection to the ONS 15454, page 2-20
Required/As Needed	Required
Onsite/Remote	Onsite or remote
Security Level	None

Step 1 If your computer is set up for a local craft connection, connect a straight-through CAT-5 LAN cable from the PC or Solaris workstation NIC to one of the following:

- RJ-45 (LAN) port on the active or standby TCC2 card
- RJ-45 (LAN) port on a hub or switch to which the ONS 15454 is physically connected

Note For instructions on crimping your own straight-through (CAT-5) LAN cables, refer to the *Cisco ONS 15454 SONET and DWDM Troubleshooting Guide*.

Note For initial shelf turn-up, you should connect your PC directly to the LAN port on the TCC2 card of the ONS 15454.

Step 2 If your computer is set up for a corporate LAN connection, connect a straight-through (CAT-5) LAN cable from the PC or Solaris workstation NIC card to a corporate LAN port.

Step 3 Return to your originating procedure (NTP).

DLP-G46 Log into CTC

Purpose	This task logs into CTC.
Tools/Equipment	None
Prerequisite Procedures	NTP-G17 Set Up Computer for CTC, page 2-2 One of the following procedures: • NTP-G18 Set Up CTC Computer for Local Craft Connection to the ONS 15454, page 2-9 • NTP-G19 Set Up a CTC Computer for a Corporate LAN Connection to the ONS 15454, page 2-20 • NTP-G20 Set Up a Remote Access Connection to the ONS 15454, page 2-22
Required/As Needed	Required
Onsite/Remote	Onsite or remote
Security Level	Retrieve or higher

Note For information about CTC views and navigation, see Appendix A, "CTC Information and Shortcuts."

Step 1 From the computer connected to the ONS 15454, start Netscape (PC or UNIX) or Internet Explorer (PC only):

- If you are using a PC, launch Netscape or Internet Explorer from the Windows Start menu or a shortcut icon.
- If you are using UNIX, launch Netscape from the command line by typing one of the following:
  - To install Netscape colors for Netscape use, type:

    # netscape -install
  - To limit Netscape to 32 colors so that if the requested color is not available, Netscape chooses the closest color option, type:

    netscape -ncols 32

Note CTC requires a full 24-color palette to run properly. When using color-intensive applications such as Netscape in UNIX, it is possible that UNIX might run out of colors to use for CTC. The **-install** and **-ncols 32** command line options limit the number of colors that Netscape uses.

Step 2 In the Netscape or Internet Explorer web address (URL) field, enter the ONS 15454 IP address. For initial setup, this is the default IP address, 192.1.0.2. (This IP address appears on the LCD. You can suppress the LCD IP address display using CTC after you log in. For more information, see the "DLP-G162 Change IP Settings" task on page 9-11.)

Step 3 Press **Enter**.

Note If you are logging into ONS 15454 nodes running different releases of CTC software, log into the node running the most recent release. If you log into a node running an older release, you will receive an INCOMPATIBLE-SW alarm for each node in the network running a new release, and CTC will not be able to manage these nodes. To check the software version of a node, select About CTC from the CTC Help menu. This will display the ONS 15454 software version for each node visible on the network view. If the node is not visible, the software version can be read from the LCD display. To resolve an alarm, refer to the *Cisco ONS 15454 SONET and DWDM Troubleshooting Guide*.

Step 4 If a Java Plug-in Security Warning dialog box appears, complete the "DLP-G47 Install Public-Key Security Certificate" task on page 2-28 to install the public-key security certificate required by Software Release 4.1 and later.

After you complete the security certificate dialog box (or if the certificate is already installed), a Java Console window displays the CTC file download status. The web browser displays information about your Java and system environments. If this is the first login, CTC caching messages appear while CTC files are downloaded to your computer. The first time you connect to an ONS 15454, this process can take several minutes. After the download, the CTC Login dialog box appears (Figure 2-1).

Figure 2-1 Logging into CTC

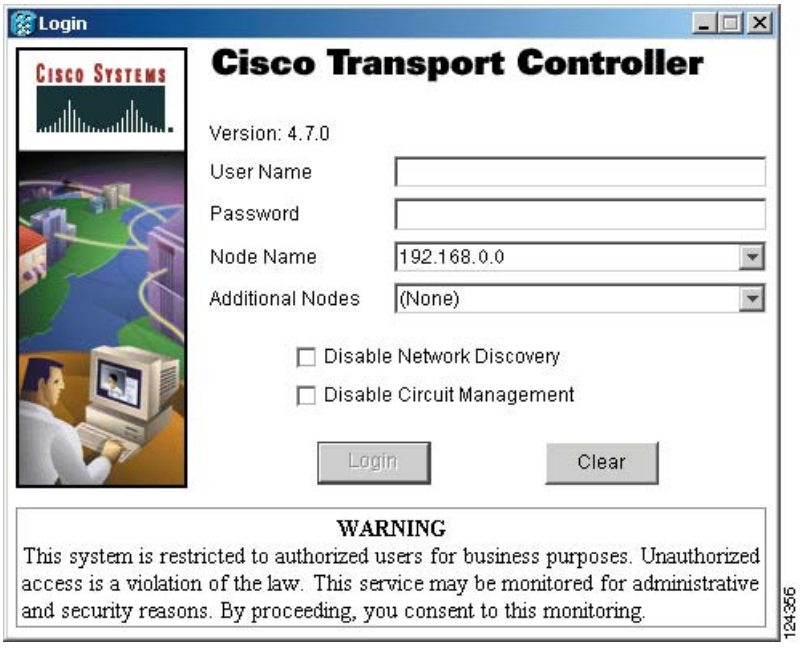

Step 5 In the Login dialog box, type a user name and password (both are case sensitive). For initial setup, type the user name **CISCO15** and the password **otbu+1**.

Note The CISCO15 user is provided with every ONS 15454. CISCO15 has superuser privileges, so you can create other users. You must create another superuser before you can delete the CISCO15 user. CISCO15 is delivered with the otbu+1 password. To change the password for CISCO15, click the Provisioning > Security tabs after you log in and change the password. To set up ONS 15454 users and assign security, go to the "NTP-G23 Create Users and Assign Security" procedure on page 3-3. Additional information about security is provided in the "18.1 Users and Security" section on page 18-1.

Step 6 Each time you log into an ONS 15454, you can make selections on the following login options:

- Node Name—Displays the IP address entered in the web browser and a drop-down list of previously entered ONS 15454 IP addresses. You can select any ONS 15454 on the list for the login, or you can enter the IP address (or node name) of any new node where you want to log in.
- Additional Nodes—Displays a list of current login node groups. To create a login node group or add additional groups, see the "DLP-G48 Create Login Node Groups" task on page 2-29.
- Disable Network Discovery—Check this box to view only the ONS 15454 (and login node group members, if any) entered in the Node Name field. Nodes linked to this node through DCCs are not discovered and will not appear in CTC network view. Using this option can decrease the CTC startup time in networks with many DCC-connected nodes, and can reduce memory consumption.
- Disable Circuit Management—Check this box to disable discovery of existing circuits. Using this option can decrease the CTC initialization time in networks with many existing circuits and reduce memory consumption. This option does not prevent the creation and management of new circuits.

Step 7 Click **Login**.

If the login is successful, the CTC window appears. From here, you can navigate to other CTC views to provision and manage the ONS 15454. If you need to turn up the shelf for the first time, see Chapter 3, "Turn Up a Node." If login problems occur, refer to the *Cisco ONS 15454 SONET and DWDM Troubleshooting Guide*.

Step 8 Return to your originating procedure (NTP).

DLP-G47 Install Public-Key Security Certificate

Purpose	This task installs the ITU Recommendation X.509 public-key security certificate. The public-key certificate is required to run Software Release 4.1 or later.
Tools/Equipment	None
Prerequisite Procedures	This task is performed during the "DLP-G46 Log into CTC" task on page 2-25. You cannot perform it outside of this task.
Required/As Needed	Required
Onsite/Remote	Onsite or remote
Security Level	Provisioning or higher

Step 1 If the Java Plug-in Security Warning dialog box appears, choose one of the following options:

Note The Java Plug-in Security Warning dialog box options that appear depend on the JRE version you are using. If you installed JRE 1.4.2, you will see the following options: Yes, No, Always, and More Details. If you are using JRE 1.3.1_02, you will see the following options (noted below in parentheses): Grant This Session, Deny, Grant Always, and View Certificate.

- Yes (Grant This Session)—Installs the public-key certificate to your PC only for the current session. After the session is ended, the certificate is deleted. This dialog box will appear the next time you log into the ONS 15454.
- No (Deny)—Denies permission to install the certificate. If you choose this option, you cannot log into the ONS 15454.
- Always (Grant Always)—Installs the public-key certificate and does not delete it after the session is over. Cisco recommends this option.
- More Details (View Certificate)—Allows you to view the public-key security certificate.

Step 2 If the Login dialog box appears, continue with Step 3. If the Change Java Policy File dialog box appears, complete this step. The Change Java Policy File dialog box appears if CTC finds a modified Java policy file (.java.policy) on your PC. In Software Release 4.0 and earlier, the Java policy file was modified to allow CTC software files to be downloaded to your PC. The modified Java policy file is not needed in Software Release 4.1 and later, so you can remove it unless you will log into ONS 15454s running software earlier than Release 4.1. Choose one of the following options:

- Yes—Removes the modified Java policy file from your PC. Choose this option only if you will log into ONS 15454s running Software Release 4.1 software or later.
- No—Does not remove the modified Java policy file from your PC. Choose this option if you will log into ONS 15454s running Software Release 4.0 or earlier. If you choose No, this dialog box will appear every time you log into the ONS 15454. If you do not want it to appear, check the **Do not show the message again** check box.

Caution If you delete the Java policy file, you cannot log into nodes running Software Release 4.0 and earlier. If you delete the file and want to log into an ONS 15454 running an earlier release, insert the software CD for the release into your PC CD-ROM and run the CTC setup wizard to reinstall the Java policy file.

Step 3 Return to your originating procedure (NTP).

DLP-G48 Create Login Node Groups

Purpose	This task creates a login node group to display ONS 15454s that have an IP connection but not a DCC connection to the login node.
Tools/Equipment	None
Prerequisite Procedures	DLP-G46 Log into CTC, page 2-25
Required/As Needed	As needed
Onsite/Remote	Onsite or remote
Security Level	Provisioning or higher

Step 1 From the Edit menu in node view, choose **Preferences**.

Step 2 Click **Login Node Group** and **Create Group**.

Step 3 Enter a name for the group in the Create Login Group Name dialog box. Click **OK**.

Step 4 In the Members area, type the IP address (or node name) of a node you want to add to the group. Click **Add**. Repeat this step for each node that you want to add to the group.

Step 5 Click **OK**.

The next time you log into an ONS 15454, the login node group will be available in the Additional Nodes list of the Login dialog box. For example, in Figure 2-2, a login node group is created that contains the IP addresses for Nodes 1, 4, and 5. During login, if you choose this group from the Additional Nodes list and Disable Network Discovery is not selected, all nodes in the figure appear. If the login group and Disable Network Discovery are both selected, only Nodes 1, 4, and 5 appear. You can create as many login groups as you need. The groups are stored in the CTC preferences file and are not visible to other users.

Figure 2-2 Login Node Group

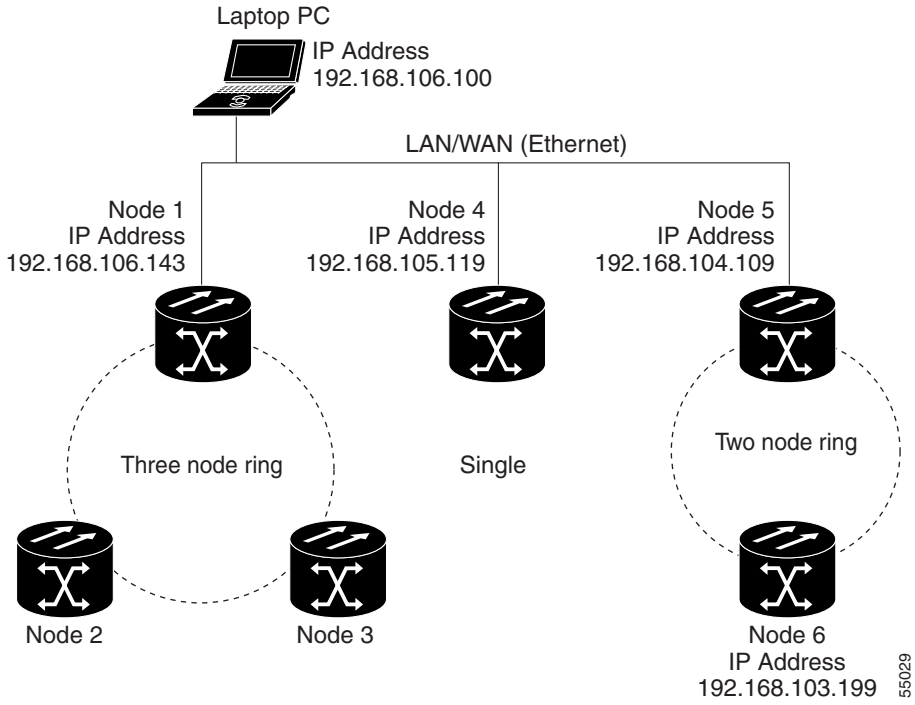

Step 6 Return to your originating procedure (NTP).

DLP-G49 Add a Node to the Current Session or Login Group

Purpose	This task adds a node to the current CTC session or login node group.
Tools	None
Prerequisite Procedures	DLP-G46 Log into CTC, page 2-25
Required/As Needed	As needed
Onsite/Remote	Onsite or remote
Security Level	Provisioning or higher

Step 1 From the CTC File menu, click **Add Node**.

Step 2 In the Add Node dialog box, enter the node name (or IP address).

Step 3 If you want to add the node to the current login group, check **Add to current login node group**. Otherwise, leave it unchecked.

Note This check box is active only if you selected a login group when you logged into CTC.

Step 4 Click **OK**.

After a few seconds, the new node appears on the network view map.

Step 5 Return to your originating procedure (NTP).

DLP-G50 Delete a Node from the Current Session or Login Group

Purpose	This task removes a node from the current CTC session or login node group. To remove a node from a login node group that is not the current one, see "DLP-G51 Delete a Node from a Specified Login Node Group" task on page 2-31.
Tools	None
Prerequisite Procedures	DLP-G46 Log into CTC, page 2-25
Required/As Needed	As needed
Onsite/Remote	Onsite or remote
Security Level	Provisioning or higher

Step 1 From the View menu, choose **Go to Network View**.

Step 2 Click the node that you want to delete.

Step 3 From the CTC File menu, click **Delete Selected Node**.

After a few seconds, the node disappears from the network view map.

Step 4 Return to your originating procedure (NTP).

DLP-G51 Delete a Node from a Specified Login Node Group

Purpose	This task removes a node from a specified login node group. To remove a node from the current login node group, see "DLP-G50 Delete a Node from the Current Session or Login Group" task on page 2-31.
Tools	None
Prerequisite Procedures	DLP-G46 Log into CTC, page 2-25
Required/As Needed	As needed
Onsite/Remote	Onsite or remote
Security Level	Provisioning or higher

Step 1 From the CTC Edit menu, choose **Preferences**.

Step 2 In the Preferences dialog box, click the **Login Node Groups** tab.

Step 3 Click the login node group tab containing the node you want to remove.

Step 4 Click the node you want to remove, then click **Remove**.

Step 5 Click **OK**.

Step 6 Return to your originating procedure (NTP).

DLP-G52 Change the JRE Version

Purpose	This task changes the JRE version, which is useful if you would like to upgrade to a later JRE version from earlier one without using the software or documentation CD. This does not affect the browser default version. After selecting the desired JRE version, you must exit CTC. The next time you log into a node, the new JRE version will be used.
Tools	None
Prerequisite Procedures	DLP-G46 Log into CTC, page 2-25
Required/As Needed	As needed
Onsite/Remote	Onsite or remote
Security Level	Provisioning or higher

Note This task is not used in Release 4.7 because only one JRE version is supported. This task is used in CTC releases that support multiple JRE versions.

Step 1 From the Edit menu, choose **Preferences**.

Step 2 Click the **JRE** tab. The JRE tab shows the current JRE version and the recommended version.

Step 3 Click the **Browse** button and navigate to the JRE directory on your computer.

Step 4 Choose the JRE version.

Step 5 Click **OK**.

Step 6 From the File menu, choose **Exit**.

Step 7 In the confirmation dialog box, click **Yes**.

Step 8 Return to your originating procedure (NTP).

DLP-G53 Configure the CTC Alerts Dialog Box for Automatic Popup

Purpose	This task sets up the CTC Alerts dialog box to open for all alerts, for circuit deletion errors only, or never. The CTC Alerts dialog box displays network disconnection, Send-PDIP inconsistency, circuit deletion status, condition retrieval errors, and software download failure.
Tools	None
Prerequisite Procedures	DLP-G46 Log into CTC, page 2-25
Required/As Needed	As needed
Onsite/Remote	Onsite or remote
Security Level	Provisioning or higher

Step 1 Click the **CTC Alerts** toolbar icon.

Step 2 In the CTC Alerts dialog box, choose one of the following:

- All alerts—Sets the CTC Alerts dialog box to open automatically for all notifications.
- Error alerts only—Sets the CTC Alerts dialog box to open automatically for circuit deletion errors only.
- Never—Sets the CTC Alerts dialog box to never open automatically.

Step 3 Click **Close**.

Step 4 Return to your originating procedure (NTP).

Turn Up a Node

This chapter explains how to provision a single Cisco ONS 15454 dense wavelength division multiplexing (DWDM) node and turn it up for service, including node name, date and time, timing references, network attributes such as IP address and default router, users and user security, card installation, and DWDM connections.

Note Procedures in this chapter require that you have a network plan calculated for your DWDM network with Cisco MetroPlanner, Release 2.5. Cisco MetroPlanner is a DWDM planning tool that is available from your Cisco account representative. Cisco MetroPlanner prepares a shelf plan for each network node and calculates the power and attenuation levels for the DWDM cards installed in the node. For information about Cisco MetroPlanner, contact your Cisco account representative. For more information about MetroPlanner, refer to the *Cisco MetroPlanner DWDM Installation and Operations Guide, Release 2.5*.

Note Unless otherwise specified, "ONS 15454" refers to both ANSI and ETSI shelf assemblies.

Before You Begin

This section lists the procedures (NTPs) that you need to complete to turn up a DWDM node. Turn to a procedure for applicable tasks (DLPs).

Complete the procedures applicable to your site plan from the following chapters:

- Chapter 1, "Install the Shelf and Common Control Cards"
- Chapter 2, "Connect the PC and Log into the GUI"

This section lists the chapter procedures (NTPs). Turn to a procedure for applicable tasks (DLPs).

1. NTP-G22 Verify Common Card Installation, page 3-2—Complete this procedure first.
2. NTP-G23 Create Users and Assign Security, page 3-3—Complete this procedure to create Cisco Transport Controller (CTC) users and assign their security levels.
3. NTP-G24 Set Up Name, Date, Time, and Contact Information, page 3-6—Continue with this procedure to set the node name, date, time, location, and contact information.
4. NTP-G25 Set Power Monitor Thresholds, page 3-8—Continue with this procedure to set the node battery power thresholds.

5. NTP-G26 Set Up CTC Network Access, page 3-8—Continue with this procedure to provision the IP address, default router, subnet mask, and network configuration settings.
6. NTP-G27 Set Up the ONS 15454 for Firewall Access, page 3-19—Continue with this procedure if the ONS 15454 will be accessed behind firewalls.
7. NTP-G28 Set Up SNMP, page 3-22—Complete this procedure if simple network management protocol (SNMP) will be used for network monitoring.
8. NTP-G29 Preprovision a Slot, page 3-24—Complete this procedure to preprovision the ONS 15454 slots.
9. NTP-G30 Install the DWDM Cards, page 3-26—Complete this procedure to install the DWDM cards, including optical units, muxponders, and transponders.
10. NTP-G31 Install the DWDM Dispersion Compensating Units, page 3-28—Complete this procedure next.
11. NTP-G32 Install the Transponder and Muxponder Cards, page 3-30—Complete this procedure next.
12. NTP-G33 Create a Y-Cable Protection Group, page 3-33—Complete this procedure, as needed, for TXP and MXP cards that will be protected with Y-cable protection.
13. NTP-G34 Install Fiber-Optic Cables on DWDM Cards, page 3-35—Complete this procedure, as needed, to install the fiber-optic cables on the DWDM cards.
14. NTP-G35 Route Fiber-Optic Cables, page 3-55—Complete this procedure, as needed, to route the fiber-optic cable.
15. NTP-G36 Calculate Cable Connections, page 3-56—Complete this procedure next.
16. NTP-G37 Run Automatic Node Setup, page 3-58—Complete this procedure next.
17. NTP-G38 Provision Terminations and Ring ID, page 3-60—Complete this procedure next.
18. NTP-G39 Verify OSCM and OSC-CSM Transmit Power, page 3-63—Complete this procedure next.
19. NTP-G40 Replace the Front Door, page 3-64—Complete this procedure, as needed, to replace the ONS 15454 front door.

NTP-G22 Verify Common Card Installation

Purpose	This procedure verifies that the ONS 15454 node has two TCC2 cards installed and is ready for turn up.
Tools/Equipment	An engineering work order, site plan, or other document specifying the ONS 15454 card installation.
Prerequisite Procedures	Chapter 1, “Install the Shelf and Common Control Cards”
Required/As Needed	Required
Onsite/Remote	Onsite
Security Level	Retrieve or higher

Step 1 Verify that two TCC2 cards are installed in Slots 7 and 11.

Step 2 Verify that the green ACT (active) LED is illuminated on one TCC2 and the amber STBY (standby) LED is illuminated on the second TCC2.

Note If the TCC2 cards are not installed, or if their LEDs are not operating as described, do not continue. Repeat the "DLP-G33 Install the TCC2 Card" task on page 1-73 or refer to the *Cisco ONS 15454 SONET and DWDM Troubleshooting Guide* to resolve installation problems before proceeding to Step 3.

Step 3 If your site plan requires an AIC or AIC-I card, verify that the AIC/AIC-I card is installed in Slot 9 and its ACT (active) LED displays a solid green light.

Step 4 Verify that the software release shown on the LCD matches the software release indicated in your site plan. If the release does not match, perform one of the following procedures:

- Perform a software upgrade using a Cisco ONS 15454 software CD. Refer to the release-specific software upgrade document.
- Replace the TCC2 cards with cards containing the correct release.

Stop. **You have completed this procedure**.

NTP-G23 Create Users and Assign Security

Purpose	This procedure creates ONS 15454 users and assigns their security levels.
Tools/Equipment	None
Prerequisite Procedures	NTP-G22 Verify Common Card Installation, page 3-2
Required/As Needed	As needed
Onsite/Remote	Onsite or remote
Security Level	Superuser only

Step 1 Complete the "DLP-G46 Log into CTC" task on page 2-25 at the node where you need to create users. If you are already logged in, continue with Step 2.

Note You must log in as a Superuser to create additional users. The CISCO15 user provided with each ONS 15454 can be used to set up other ONS 15454 users. You can add up to 500 users to one ONS 15454.

Step 2 Complete the "DLP-G54 Create a New User—Single Node" task on page 3-4 or the "DLP-G55 Create a New User—Multiple Nodes" task on page 3-4 as needed.

Note You must add the same user name and password to each node a user will access.

Step 3 If you want to modify the security policy settings, including password aging and idle user timeout policies, complete the "NTP-G88 Modify Users and Change Security" procedure on page 9-34.

Stop. **You have completed this procedure**.

DLP-G54 Create a New User—Single Node

Purpose	This task creates a new user for one ONS 15454.
Tools/Equipment	None
Prerequisite Procedures	DLP-G46 Log into CTC, page 2-25
Required/As Needed	As needed
Onsite/Remote	Onsite or remote
Security Level	Superuser only

Step 1 In node view, click the **Provisioning** > **Security** > **Users** tabs.

Step 2 In the Users window, click **Create**.

Step 3 In the Create User dialog box, enter the following:

- Name—Type the user name. The name must be a minimum of six and a maximum of 20 alphanumeric (a-z, A-Z, 0-9) characters. For TL1 compatibility, the user name must be 6 to 10 characters.
- Password—Type the user password. The password must be a minimum of six and a maximum of 20 alphanumeric (a-z, A-Z, 0-9) and special (+, #,%) characters, where at least two characters are non alphabetic and at least one character is a special character. For TL1 compatibility, the password must be 6 to 10 characters. The password must not contain the user name.
- Confirm Password—Type the password again to confirm it.
- Security Level—Choose a security level for the user: RETRIEVE, MAINTENANCE, PROVISIONING, or SUPERUSER. See the "18.1 Users and Security" section on page 18-1for information about the capabilities provided with each level.

Note Each security level has a different idle time. The idle time is the length of time that CTC can remain idle before the password must be reentered. The defaults are: Retrieve user = unlimited, Maintenance user = 60 minutes, Provisioning user = 30 minutes, and Superuser = 15 minutes. To change the idle times, refer to the "NTP-G88 Modify Users and Change Security" procedure on page 9-34.

Step 4 Click **OK**.

Step 5 Return to your originating procedure (NTP).

DLP-G55 Create a New User—Multiple Nodes

Purpose	This task adds a new user to multiple ONS 15454s.
Tools/Equipment	None
Prerequisite Procedures	DLP-G46 Log into CTC, page 2-25
Required/As Needed	As needed
Onsite/Remote	Onsite or remote
Security Level	Superuser

Note All nodes where you want to add users must be accessible in network view.

Step 1 From the View menu, choose **Go to Network View**.

Step 2 Click the **Provisioning** > **Security** > **Users** tabs.

Step 3 In the Users window, click **Create**.

Step 4 In the Create User dialog box, enter the following:

- Name—Type the user name. The name must be a minimum of six and a maximum of 20 alphanumeric (a-z, A-Z, 0-9) characters. For TL1 compatibility, the user name must 6 to 10 characters.
- Password—Type the user password. The password must be a minimum of six and a maximum of 20 alphanumeric (a-z, A-Z, 0-9) and special (+, #, %) characters, where at least two characters are non alphabetic and at least one character is a special character. For TL1 compatibility, the password must be 6 to 10 characters. The password must not contain the user name.
- Confirm Password—Type the password again to confirm it.
- Security Level—Choose a security level for the user: RETRIEVE, MAINTENANCE, PROVISIONING, or SUPERUSER. Refer to the "18.1 Users and Security" section on page 18-1 for information about the capabilities provided with each level.

Note Each security level has a different idle time. The idle time is the length of time that CTC can remain idle before it locks up and the password must be reentered. The defaults are: Retrieve user = unlimited, Maintenance user = 60 minutes, Provisioning user = 30 minutes, and Superuser = 15 minutes. To change the idle times, refer to the "NTP-G88 Modify Users and Change Security" procedure on page 9-34.

Step 5 Under "Select applicable nodes," deselect any nodes where you do not want to add the user (all network nodes are selected by default).

Step 6 Click **OK**.

Step 7 In the User Creation Results dialog box, verify that the user was added to all the nodes chosen in Step 5. If not, click **OK** and repeat Steps 2 through 6. If the user was added to all nodes, click **OK** and continue with the next step.

Step 8 Return to your originating procedure (NTP).

NTP-G24 Set Up Name, Date, Time, and Contact Information

Purpose	This procedure provisions identification information for the node, including the node name, a contact name and phone number, the location of the node, and the date, time, and time zone.
Tools/Equipment	None
Prerequisite Procedures	NTP-G22 Verify Common Card Installation, page 3-2
Required/As Needed	As needed
Onsite/Remote	Onsite or remote
Security Level	Provisioning or higher

Step 1 Complete the "DLP-G46 Log into CTC" task on page 2-25 for the node you will turn up. If you are already logged in, continue with Step 2.

Step 2 Click the **Provisioning > General** tabs.

Step 3 Enter the following information in the fields listed:

- Node Name—Type a name for the node. For TL1 compliance, names must begin with an alpha character and have no more than 20 alphanumeric (a-z, A-Z, 0-9) characters.

  Note To avoid errors when you import the Cisco MetroPlanner configuration file in the "DLP-G74 Import a Cisco MetroPlanner Configuration File" task on page 3-59, the CTC node name and the MetroPlanner site name should be the same or at least easy to identify.

- Contact—Type the name of the node contact person and the phone number, up to 255 characters (optional).
- Latitude—Enter the node latitude: N (north) or S (south), degrees, and minutes (optional).
- Longitude—Enter the node longitude: E (east) or W (west), degrees, and minutes (optional).

  CTC uses the latitude and longitude to position ONS 15454 icons on the network view map. To convert a coordinate in degrees to degrees and minutes, multiply the number after the decimal by 60. For example, the latitude 38.250739 converts to 38 degrees, 15 minutes (0.250739 x 60 = 15.0443, rounded to the nearest whole number).
- Description—Type a description of the node. The description can be a maximum of 255 characters.
- Use NTP/SNTP Server—When checked, CTC uses a Network Time Protocol (NTP) or Simple Network Time Protocol (SNTP) server to set the date and time of the node.

  If you do not use an SNTP or NTP server, complete the Date and Time fields. The ONS 15454 will use these fields for alarm dates and times. (CTC displays all alarms in the login node's time zone for cross network consistency.)

  Note Using an NTP or SNTP server ensures that all ONS 15454 network nodes use the same date and time reference. The server synchronizes the node's time after power outages or software upgrades.

  If you check the Use NTP/SNTP Server check box, type the IP address of one of the following:

  – an NTP/SNTP server connected to the ONS 15454

– Another ONS 15454 with NTP/SNTP enabled that is connected to the ONS 15454

If you check gateway network element (GNE) for the ONS 15454 proxy server (see "DLP-G56 Provision IP Settings" task on page 3-9), external ONS 15454s must reference the gateway ONS 15454 for NTP/SNTP timing. For more information about the ONS 15454 gateway settings, see Chapter 19, "CTC Connectivity Reference."

Caution If you reference another ONS 15454 for the NTP/SNTP server, make sure the second ONS 15454 references an NTP/SNTP server and not the first ONS 15454 (that is, do not create an NTP/SNTP timing loop by having two ONS 15454s reference each other).

- Date—If Use NTP/SNTP Server is not checked, type the current date in the format m/d/yyyy, for example, September 24, 2002 is 9/24/2002.
- Time—If Use NTP/SNTP Server is not checked, type the current time in the format hh:mm:ss, for example, 11:24:58. The ONS 15454 uses a 24-hour clock, so 10:00 PM is entered as 22:00:00.
- Time Zone—Click the field and choose a city within your time zone from the drop-down list. The menu displays the 80 World Time Zones from –11 through 0 (GMT) to +14. Continental United States time zones are GMT-05:00 (Eastern), GMT-06:00 (Central), GMT-07:00 (Mountain), and GMT-08:00 (Pacific).
- Use Daylight Savings Time—Check this check box if the time zone that you chose is using Daylight Savings Time.
- Insert AIS-V on STS-1 SD-P—Not used in DWDM networks.
- SD-P BER—Not used in DWDM networks.

Step 4 Click **Apply**.

Step 5 In the confirmation dialog box, click **Yes**.

Step 6 Review the node information. If you need to make corrections, repeat Steps 3 through 5 to enter the corrections. If the information is correct, continue with the "NTP-G25 Set Power Monitor Thresholds" procedure on page 3-8.

Stop. **You have completed this procedure**.

NTP-G25 Set Power Monitor Thresholds

Purpose	This procedure provisions extreme high, extreme low, and low input battery power thresholds within a –48 volts direct current (VDC) environment. When the thresholds are crossed, the TCC2 generates warning alarms in CTC. For ONS 15454 power specifications, see Appendix B, "Hardware Specifications."
Tools/Equipment	None
Prerequisite Procedures	NTP-G22 Verify Common Card Installation, page 3-2
Required/As Needed	Required
Onsite/Remote	Onsite or remote
Security Level	Provisioning or higher

Step 1 Complete the "DLP-G46 Log into CTC" task on page 2-25 for the node you will set up. If you are already logged in, continue with Step 2.

Step 2 In node view, click the **Provisioning > General > Power Monitor** tabs.

Step 3 To change the extreme low battery voltage threshold in 0.5 VDC increments, choose a voltage from the **ELWBATVGVdc** drop-down list.

Step 4 To change the low battery voltage threshold in 0.5 VDC increments, choose a voltage from the **LWBATVGVdc** drop-down list.

Step 5 To change the high battery voltage threshold in 0.5 VDC increments, choose a voltage from the **HIBATVGVdc** drop-down list.

Step 6 To change the extreme high battery voltage threshold in 0.5 VDC increments, choose a voltage from the **EHIBATVGVdc** drop-down list.

Step 7 Click **Apply**.

Stop. **You have completed this procedure**.

NTP-G26 Set Up CTC Network Access

Purpose	This procedure provisions network access for a node, including its subnet mask, default router, Dynamic Host Configuration Protocol (DHCP) server, IIOP (Internet Inter-Orb Protocol) listener port, proxy server settings, static routes, Open Shortest Path First (OSPF) protocol, and Routing Information Protocol (RIP).
Tools/Equipment	None
Prerequisite Procedures	NTP-G22 Verify Common Card Installation, page 3-2
Required/As Needed	Required
Onsite/Remote	Onsite or remote
Security Level	Superuser

Step 1 Complete the "DLP-G46 Log into CTC" task on page 2-25. If you are already logged in, continue with Step 2.

Step 2 Complete the "DLP-G56 Provision IP Settings" task on page 3-9 to provision the ONS 15454 IP address, subnet mask, default router, DHCP server, IIOP listener port, and proxy server settings.

Tip If you cannot log into the node, you can change its IP address, default router, and network mask by using the LCD on the ONS 15454 fan-tray assembly (unless LCD provisioning is suppressed). See the "DLP-G57 Set the IP Address, Default Router, and Network Mask Using the LCD" task on page 3-13 for instructions. However, you cannot use the LCD to provision any other network settings.

Step 3 If static routes are needed, complete the "DLP-G58 Create a Static Route" task on page 3-15. For more information about static routes, see Chapter 19, "CTC Connectivity Reference."

Step 4 If the ONS 15454 is connected to a LAN or WAN that uses OSPF, complete the "DLP-G59 Set Up or Change Open Shortest Path First Protocol" task on page 3-16.

Step 5 If the ONS 15454 is connected to a LAN or WAN that uses RIP, complete the "DLP-G60 Set Up or Change Routing Information Protocol" task on page 3-18.

Stop. **You have completed this procedure**.

DLP-G56 Provision IP Settings

Purpose	This task provisions IP settings, which includes the IP address, default router, DHCP access, firewall access, and proxy server settings for an ONS 15454 node.
Tools/Equipment	None
Prerequisite Procedures	DLP-G46 Log into CTC, page 2-25
Required/As Needed	Required
Onsite/Remote	Onsite or remote
Security Level	Superuser

Caution All network changes should be approved by your network (or LAN) administrator.

Step 1 In node view, click the **Provisioning** > **Network** tabs.

Step 2 Complete the following information in the fields listed:

- IP Address—Type the IP address assigned to the ONS 15454 node.
- Suppress CTC IP Display—Check this check box if you want to prevent the node IP address from being displayed in CTC to users with Provisioner, Maintenance, or Retrieve security levels. (The IP address suppression is not applied to users with Superuser security level.)
- LCD IP Display—Choose one of the following:

  - Allow Configuration—Displays the node IP address on the LCD and allows users to change the IP settings using the LCD. This option enables the "DLP-G57 Set the IP Address, Default Router, and Network Mask Using the LCD" task on page 3-13.
  - Display Only—Displays the node IP address on the LCD but does not allow users to change the IP address using the LCD.
  - Suppress Display—Suppresses the node IP address display on the LCD.

- Default Router—If the ONS 15454 must communicate with a device on a network that the ONS 15454 is not directly connected to, the ONS 15454 can forward the packets to the default router. Type the IP address of the router in this field.

Note This field is ignored if the node is not connected to a LAN, or if you enable any of the gateway settings to implement the ONS 15454 proxy server feature.

- Forward DHCP Request To—Check this check box to enable DHCP. Also, enter the DHCP server IP address in the Request To field. Unchecked is the default. If you will enable any of the gateway settings to implement the ONS 15454 proxy server features, leave this field blank.

Note If you enable DHCP, computers connected to an ONS 15454 node can obtain temporary IP addresses from an external DHCP server. The ONS 15454 only forwards DHCP requests; it does not act as a DHCP server.

- MAC Address—(*Display only.*) Displays the ONS 15454 IEEE 802 MAC address.
- Net/Subnet Mask Length—Type the subnet mask length (decimal number representing the subnet mask length in bits) or click the arrows to adjust the subnet mask length. The subnet mask length is the same for all ONS 15454s in the same subnet.
- TCC CORBA (IIOP) Listener Port—Provisions the ONS 15454 IIOP listener port. This listener port enables communication with the ONS 15454 through firewalls. See the "NTP-G27 Set Up the ONS 15454 for Firewall Access" procedure on page 3-19 for more information.
- Gateway Settings—Provides options that enable the ONS 15454 proxy server features. In proxy server networks, the ONS 15454 is either an end network element (ENE), gateway network element (GNE), or proxy-only server. GNEs and ENEs manage their craft Ethernet ports differently. A GNE will connect to an entire intranet or internet through its craft Ethernet port. An ENE will only communicate with the hosts that have connected to it, such as a CTC computer or other ONS 15454 ENE. Provisioning must be consistent for each NE type. For more information, see the "19.2.7 Scenario 7: Provisioning the ONS 15454 Proxy Server" section on page 19-11.
- Enable proxy server on port—If checked, the ONS 15454 serves as a proxy for connections between CTC clients and ONS 15454s that are DCC-connected to the proxy ONS 15454. The CTC client establishes connections to data communications channel (DCC)-connected nodes through the proxy node. The CTC client does not require IP connectivity to the DCC-connected nodes, only to the proxy ONS 15454. If Enable proxy server on port is off, the node does not proxy for any CTC clients, although any established proxy connections continue until the CTC client exits. When this box is checked, you can set the node as an ENE or a GNE:
  - End Network Element (ENE)—If selected, the CTC computer is only visible to the ONS 15454 to which the CTC computer is connected. The computer is not visible to other DCC-connected nodes. In addition, firewall is enabled, which means that the node prevents IP traffic from being routed between the DCC and the LAN port.

- Gateway Network Element (GNE)—If selected, the CTC computer is visible to other DCC-connected nodes. The node prevents IP traffic from being routed between the DCC and the LAN port.
- Proxy-only—If selected, the ONS 15454 responds to CTC requests with a list of DCC-connected nodes for which the node serves as a proxy. The CTC computer is visible to other DCC-connected nodes. The node does not prevent traffic from being routed between the DCC and LAN port.

Step 3 Click **Apply**.

Step 4 Click **Yes** in the confirmation dialog box.

Both TCC2 cards reboot, one at a time. During this time (approximately 5 minutes), the active and standby TCC2 card LEDs go through the cycle shown in Table 3-1. Eventually, a "Lost node connection, switching to network view" message appears.

Table 3-1 LED Behavior During TCC2 Reboot

Reboot Activity	Active TCC2 LEDs	Standby TCC2 LEDs
Standby TCC2 card updated with new network information. Memory test (1 to 2 minutes). If an AIC or AIC-I card is installed, AIC FAIL and alarm LEDs light up briefly when the AIC is updated. The standby TCC2 becomes the active TCC2.	ACT/STBY: Flashing green.	1. ACT/STBY: Flashing yellow. 2. FAIL LED: Solid red. 3. All LEDs on except ACT/STBY. 4. CRIT turns off. 5. MAJ and MIN turn off. 6. REM, SYNC, and ACO turn off. 7. All LEDs (except A&B PWR) turn off (1 to 2 minutes). 8. ACT/STBY: Solid yellow. 9. Alarm LEDs: Flash once. 10. ACT/STBY: Solid green.
Memory test (1 to 2 minutes). TCC2 updated with new network information. The active TCC2 becomes the standby TCC2.	1. All LEDs: Turn off (1 to 2 minutes). CTC displays “Lost node connection, switching to network view” message. 2. FAIL LED: Solid red. 3. FAIL LED: Flashing red. 4. All LEDs on except ACT/STBY. 5. CRIT turns off. 6. MAJ and MIN turn off. 7. REM, SYNC, and ACO turn off; all LEDs are off. 8. ACT/STBY: Solid yellow. 9. ACT/STBY: Flashing yellow. 10. ACT/STBY: Solid yellow.	ACT/STBY: Solid green.

Step 5 Click **OK**. The network view appears. The node icon appears in gray, during which time you cannot access the node.

Step 6 Double-click the node icon when it becomes green.

Step 7 Return to your originating procedure (NTP).

DLP-G57 Set the IP Address, Default Router, and Network Mask Using the LCD

Purpose	This task changes the ONS 15454 IP address, default router, and network mask using the LCD on the fan-tray assembly. Use this task if you cannot log into CTC.
Tools/Equipment	None
Prerequisite Procedures	DLP-G33 Install the TCC2 Card, page 1-73
Required/As Needed	Optional
Onsite/Remote	Onsite
Security Level	None

Note You cannot perform this task if the LCD IP Display on the node view Provisioning > Network tab is set to Display Only or Suppress Display. See "DLP-G56 Provision IP Settings" task on page 3-9 to view or change the LCD IP Display field.

Note The LCD reverts to normal display mode after 5 seconds of button inactivity.

Step 1 On the ONS 15454 front panel, repeatedly press the **Slot** button until Node appears on the LCD.

Step 2 Repeatedly press the **Port** button until the following displays:

- To change the node IP address, Status=IpAddress (Figure 3-1)
- To change the node network mask, Status=Net Mask
- To change the default router IP address, Status=Default Rtr

Figure 3-1 Selecting the IP Address Option

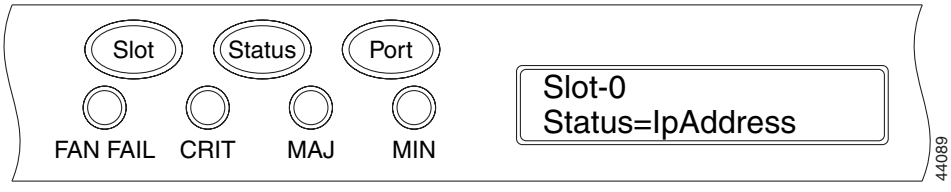

Step 3 Press the **Status** button to display the node IP address (Figure 3-2), the node subnet mask length, or the default router IP address.

Figure 3-2 Changing the IP Address

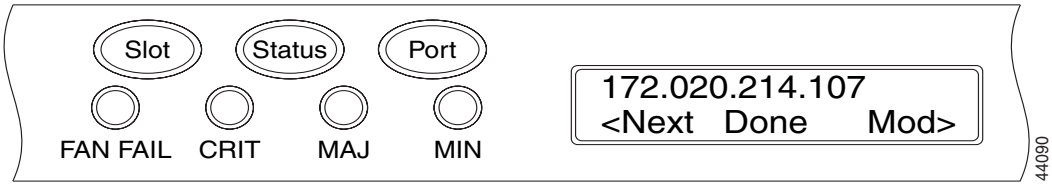

Step 4 Push the **Slot** button to move to the IP address or subnet mask digit you need to change. The selected digit flashes.

Tip The Slot, Status, and Port button positions correspond to the command position on the LCD. For example, in Figure 3-2, you press the Slot button to invoke the Next command and the Port button to invoke the Done command.

Step 5 Press the **Port** button to cycle the IP address or subnet mask to the correct digit.

Step 6 When the change is complete, press the **Status** button to return to the Node menu.

Step 7 Repeatedly press the **Port** button until the Save Configuration option appears (Figure 3-3).

Figure 3-3 Selecting the Save Configuration Option

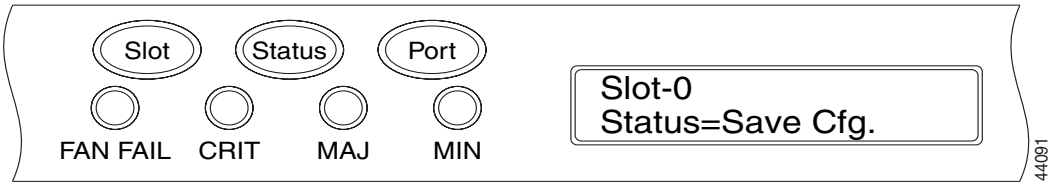

Step 8 Press the **Status** button to choose the Save Configuration option.

A Save and REBOOT message appears (Figure 3-4).

Figure 3-4 Saving and Rebooting the TCC2/TCC2P

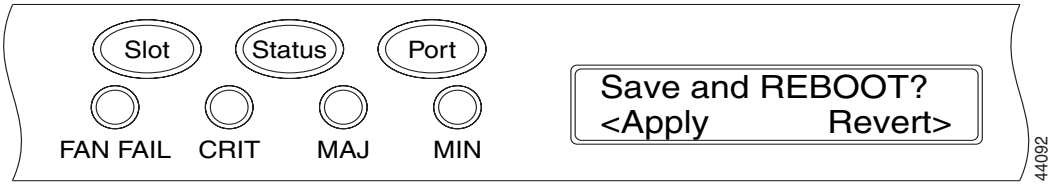

Step 9 Press the **Slot** button to apply the new IP address configuration or press **Port** to cancel the configuration.

Saving the new configuration causes the TCC2 cards to reboot. During the reboot, a “Saving Changes - TCC Reset” message displays on the LCD. The LCD returns to the normal alternating display after the TCC2 reboot is complete.

Note The IP address and default router must be on the same subnet. If not, you cannot apply the configuration.

Step 10 Return to your originating procedure (NTP).

DLP-G58 Create a Static Route

Purpose	This task creates a static route to establish CTC connectivity to a computer on another network.
Tools/Equipment	None
Prerequisite Procedures	DLP-G46 Log into CTC, page 2-25
Required/As Needed	Required if either of the following conditions are is true: • CTC computers on one subnet need to connect to ONS 15454s that are connected by a router to ONS 15454s residing on another subnet. OSPF is not enabled and the External Network Element gateway setting is not checked. • You need to enable multiple CTC sessions among ONS 15454s residing on the same subnet and the External Network Element gateway setting is not enabled.
Onsite/Remote	Onsite or remote
Security Level	Provisioning or higher

Step 1 In node view, click the **Provisioning** > **Network** tabs.

Step 2 Click the **Static Routing** tab. Click **Create**.

Step 3 In the Create Static Route dialog box, enter the following:

- Destination—Enter the IP address of the computer running CTC. To limit access to one computer, enter the full IP address and a subnet mask of 255.255.255.255. To allow access to all computers on the 192.168.1.0 subnet, enter 192.168.1.0 and a subnet mask of 255.255.255.0. You can enter a destination of 0.0.0.0 to allow access to all CTC computers that connect to the router.
- Mask—Enter a subnet mask. If the destination is a host route (that is, one CTC computer), enter a 32-bit subnet mask (255.255.255.255). If the destination is a subnet, adjust the subnet mask accordingly, for example, 255.255.255.0. If the destination is 0.0.0.0, CTC automatically enters a subnet mask of 0.0.0.0 to provide access to all CTC computers. You cannot change this value.
- Next Hop—Enter the IP address of the router port or the node IP address if the CTC computer is connected to the node directly.
- Cost—Enter the number of hops between the ONS 15454 and the computer.

Step 4 Click **OK**. Verify that the static route appears in the Static Route window.

Note Static route networking examples are provided in Chapter 19, "CTC Connectivity Reference."

Step 5 Return to your originating procedure (NTP).

DLP-G59 Set Up or Change Open Shortest Path First Protocol

Purpose	This task enables the Open Shortest Path First (OSPF) routing protocol on the ONS 15454. Perform this task if you want to include the ONS 15454 in OSPF-enabled networks.
Tools/Equipment	None
Prerequisite Procedures	DLP-G46 Log into CTC, page 2-25 You will need the OSPF Area ID, Hello and Dead intervals, and authentication key (if OSPF authentication is enabled) provisioned on the router to which the ONS 15454 is connected.
Required/As Needed	As needed
Onsite/Remote	Onsite or remote
Security Level	Provisioning or higher

Step 1 In node view, click the **Provisioning** > **Network** > **OSPF** tabs.

Step 2 On the top left side of the OSPF pane, complete the following:

- DCC/GCC OSPF Area ID Table—In dotted decimal format, enter the number that identifies the ONS 15454s as a unique OSPF area ID. The Area ID can be any number between 000.000.000.000 and 255.255.255.255, but must be unique to the LAN OSPF area.
- SDCC Metric—This value is normally unchanged. It sets a cost for sending packets across the Section DCC, which is used by OSPF routers to calculate the shortest path. This value should always be higher than the LAN metric. The default SDCC metric is 100.
- LDCC Metric—Sets a cost for sending packets across the Line DCC. This value should always be lower than the SDCC metric. The default LDCC metric is 33. It is usually not changed.

Step 3 In the OSPF on LAN area, complete the following:

- OSPF active on LAN—When checked, enables the ONS 15454 OSPF topology to be advertised to OSPF routers on the LAN. Enable this field on ONS 15454s that directly connect to OSPF routers.
- LAN Port Area ID—Enter the OSPF area ID (dotted decimal format) for the router port where the ONS 15454 is connected. (This number is different from the DCC/GCC OSPF Area ID.)

Step 4 By default, OSPF is set to No Authentication. If the OSPF router requires authentication, complete the following steps. If not, continue with Step 5.

a. Click the **No Authentication** button.

b. In the Edit Authentication Key dialog box, complete the following:

- Type—Choose **Simple Password**.
- Enter Authentication Key—Enter the password.
- Confirm Authentication Key—Enter the same password to confirm it.

c. Click **OK**.

The authentication button label changes to Simple Password.

Step 5 Provision the OSPF priority and interval settings.

The OSPF priority and interval defaults are ones most commonly used by OSPF routers. Verify that these defaults match the ones used by the OSPF router where the ONS 15454 is connected.

- Router Priority—Selects the designated router for a subnet.

- Hello Interval (sec)—Sets the number of seconds between OSPF hello packet advertisements sent by OSPF routers. Ten seconds is the default.
- Dead Interval—Sets the number of seconds that will pass while an OSPF router's packets are not visible before its neighbors declare the router down. Forty seconds is the default.
- Transit Delay (sec)—Indicates the service speed. One second is the default.
- Retransmit Interval (sec)—Sets the time that will elapse before a packet is resent. Five seconds is the default.
- LAN Metric—Sets a cost for sending packets across the LAN. This value should always be lower than the SDCC metric. Ten is the default.

Step 6 Under OSPF Area Range Table, create an area range table if one is needed:

Note Area range tables consolidate the information that is outside an OSPF area border. One ONS 15454 in the ONS 15454 OSPF area is connected to the OSPF router. An area range table on this node points the router to the other nodes that reside within the ONS 15454 OSPF area.

a. Under OSPF Area Range Table, click **Create**.

b. In the Create Area Range dialog box, enter the following:

- Range Address—Enter the area IP address for the ONS 15454s that reside within the OSPF area. For example, if the ONS 15454 OSPF area includes nodes with IP addresses 10.10.20.100, 10.10.30.150, 10.10.40.200, and 10.10.50.250, the range address would be 10.10.0.0.
- Range Area ID—Enter the OSPF area ID for the ONS 15454s. This is either the ID in the DCC OSPF Area ID field or the ID in the Area ID for LAN Port field.
- Mask Length—Enter the subnet mask length. In the Range Address example, this is 16.
- Advertise—Check if you want to advertise the OSPF range table.

c. Click **OK**.

Step 7 All OSPF areas must be connected to Area 0. If the ONS 15454 OSPF area is not physically connected to Area 0, use the following steps to create a virtual link table that will provide the disconnected area with a logical path to Area 0:

a. Under OSPF Virtual Link Table, click **Create**.

b. In the Create Virtual Link dialog box, complete the following fields. OSPF settings must match OSPF settings for the ONS 15454 OSPF area:

- Neighbor—The router ID of the Area 0 router.
- Transit Delay (sec)—The service speed. One second is the default.
- Hello Int (sec)—The number of seconds between OSPF hello packet advertisements sent by OSPF routers. Ten seconds is the default.
- Auth Type—If the router where the ONS 15454 is connected uses authentication, choose **Simple Password**. Otherwise, choose **No Authentication**.
- Retransmit Int (sec)—Sets the time that will elapse before a packet is resent. Five seconds is the default.
- Dead Int (sec)—Sets the number of seconds that will pass while an OSPF router's packets are not visible before its neighbors declare the router down. Forty seconds is the default.

c. Click **OK**.

Step 8 After entering ONS 15454 OSPF area data, click **Apply**.

If you changed the Area ID, the TCC2 cards reset, one at a time. The reset takes approximately 10 to 15 minutes. Table 3-1 on page 3-12 shows the LED behavior during the TCC2 reset.

Step 9 Return to your originating procedure (NTP).

DLP-G60 Set Up or Change Routing Information Protocol

Purpose	This task enables Routing Information Protocol (RIP) on the ONS 15454. Perform this task if you want to include the ONS 15454 in RIP-enabled networks.
Tools/Equipment	None
Prerequisite Procedures	DLP-G46 Log into CTC, page 2-25 You need to create a static route to the router adjacent to the ONS 15454 for the ONS 15454 to communicate its routing information to non-DCC-connected nodes.
Required/As Needed	As needed
Onsite/Remote	Onsite or remote
Security Level	Provisioning or higher

Step 1 In node view, click the **Provisioning** > **Network** > **RIP** tabs.

Step 2 Check the **RIP Active** check box if you are activating RIP.

Step 3 Choose either RIP Version 1 or RIP Version 2 from the drop-down list, depending on which version is supported in your network.

Step 4 Set the RIP metric. The RIP metric can be set to a number between 1 and 15 and represents the number of hops.

Step 5 By default, RIP is set to No Authentication. If the router that the ONS 15454 is connected to requires authentication, complete the following steps. If not, continue with Step 6.

a. Click the **No Authentication** button.

b. In the Edit Authentication Key dialog box, complete the following:

- Type—Choose **Simple Password**.
- Enter Authentication Key—Enter the password,
- Confirm Authentication Key—Enter the same password to confirm it.

c. Click **OK**.

The authentication button label changes to Simple Password.

Step 6 If you want to complete an address summary, complete the following steps. If not, continue with Step 7. Complete the address summary only if the ONS 15454 is a gateway NE with multiple external ONS 15454 NEs attached with IP addresses in different subnets.

a. In the RIP Address Summary area, click **Create**.

b. In the Create Address Summary dialog box, complete the following:

- Summary Address—Enter the summary IP address.
- Mask Length—Enter the subnet mask length using the up and down arrows.

- Hops—Enter the number of hops. The smaller the number of hops, the higher the priority.

c. Click **OK.**

Step 7 Return to your originating procedure (NTP).

NTP-G27 Set Up the ONS 15454 for Firewall Access

Purpose	This procedure provisions ONS 15454s and CTC computers for access through firewalls.
Tools/Equipment	IIOP listener port number provided by your LAN or firewall administrator
Prerequisite Procedures	NTP-G22 Verify Common Card Installation, page 3-2
Required/As Needed	As needed
Onsite/Remote	Onsite or remote
Security Level	Provisioning or higher

Step 1 Log into a node that is behind the firewall. See the "DLP-G46 Log into CTC" task on page 2-25 for instructions. If you are already logged in, continue with Step 2.

Step 2 Complete the "DLP-G61 Provision the IIOP Listener Port on the ONS 15454" task on page 3-20.

Figure 3-5 shows ONS 15454s in a protected network and the CTC computer in an external network. For the computer to access the ONS 15454s, you must provision the IIOP listener port specified by your firewall administrator on the ONS 15454.

Figure 3-5 Nodes Behind a Firewall

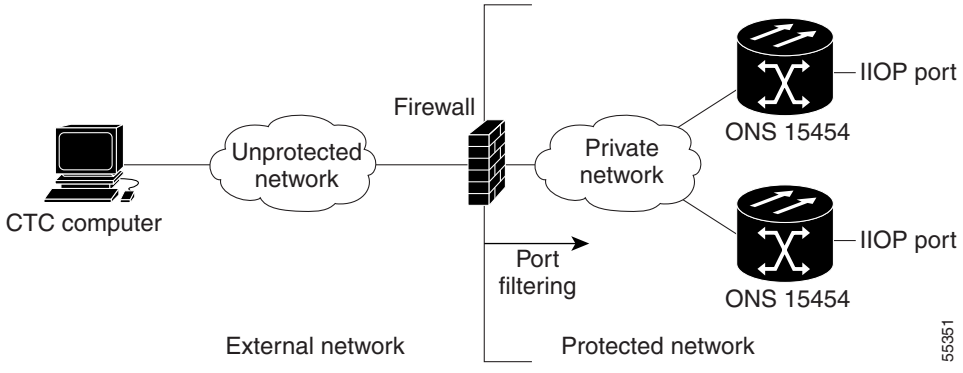

Step 3 If the CTC computer resides behind a firewall, complete the "DLP-G62 Provision the IIOP Listener Port on the CTC Computer" task on page 3-22.

Figure 3-6 shows a CTC computer and ONS 15454 behind firewalls. For the computer to access the ONS 15454, you must provision the IIOP port on the CTC computer and on the ONS 15454.

Figure 3-6 CTC Computer and ONS 15454s Residing Behind Firewalls

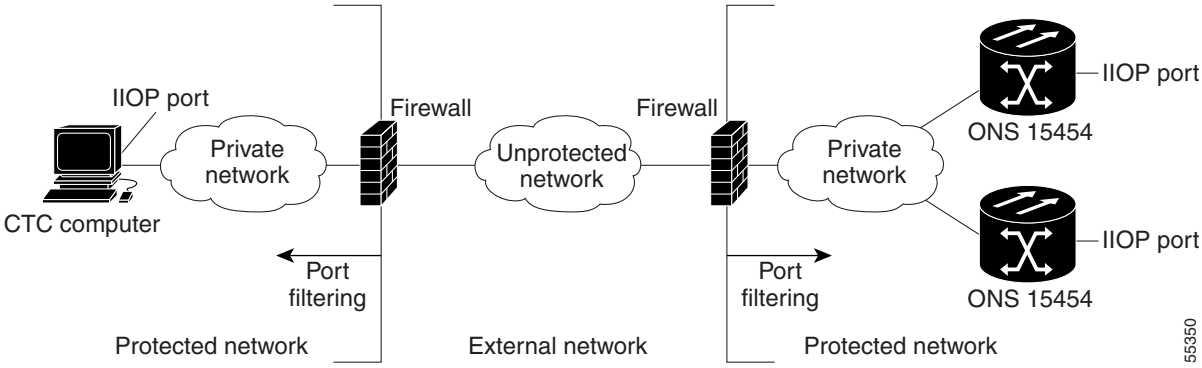

Stop. You have completed this procedure.

DLP-G61 Provision the IIOP Listener Port on the ONS 15454

Purpose	This task sets the IIOP listener port on the ONS 15454, which enables you to access ONS 15454s that reside behind a firewall.
Tools/Equipment	IIOP listener port number provided by your LAN or firewall administrator
Prerequisite Procedures	DLP-G46 Log into CTC, page 2-25
Required/As Needed	As needed
Onsite/Remote	Onsite or remote
Security Level	Provisioning or higher

Note If the Enable Proxy Server on port 1080 check box is checked, CTC will use port 1080 and ignore the configured IIOP port setting. If Enable Proxy Server is subsequently unchecked, the configured IIOP listener port will be used.

Step 1 In node view, click the **Provisioning** > **Network** > **General** tabs.

Step 2 In the TCC CORBA (IIOP) Listener Port area, choose a listener port option:

- Default - TCC Fixed—Uses Port 57790 to connect to ONS 15454s on the same side of the firewall or if no firewall is used (default). This option can be used for access through a firewall if Port 57790 is open.
- Standard Constant—Uses Port 683, the CORBA default port number.
- Other Constant—If Port 683 is not used, type the IIOP port specified by your firewall administrator. The port cannot use any of the ports shown in Table 3-2.

Table 3-2 Ports Used by the TCC2 Cards

Port	Function
0	Reserved
21	FTP control
23	Telnet
80	HTTP
111	rpc (not used; but port is in use)
513	rlogin (not used; but port is in use)
=<1023	Default CTC listener ports
1080	Proxy server
2001-2017	I/O card telnet
2018	DCC processor on active TCC2/TCC2P
2361	TL1
3082	TL1
3083	TL1
5001	Bidirectional line switched ring (BLSR) server port
5002	BLSR client port
7200, 7209, 7210	SNMP input port
9100	EQM port
9101	EQM port 2
9401	TCC2/TCC2P boot port
9999	Flash manager
57790	Default TCC2/TCC2P listener port

Step 3 Click **Apply**.

Step 4 When the Change Network Configuration message appears, click **Yes**.

Both ONS 15454 TCC2/TCC2Ps reboot, one at a time. The reboot takes approximately 15 minutes.

Step 5 Return to your originating procedure (NTP).

DLP-G62 Provision the IIOP Listener Port on the CTC Computer

Purpose	This task selects the IIOP listener port on CTC.
Tools/Equipment	IIOP listener port number from LAN or firewall administrator.
Prerequisite Procedures	NTP-G22 Verify Common Card Installation, page 3-2 DLP-G46 Log into CTC, page 2-25
Required/As Needed	Required only if the computer running CTC resides behind a firewall.
Onsite/Remote	Onsite or remote
Security Level	Provisioning or higher

Step 1 From the Edit menu, choose **Preferences**.

Step 2 In the Preferences dialog box, click the **Firewall** tab.

Step 3 In the CTC CORBA (IIOP) Listener Port area, choose a listener port option:

- Default - Variable—Use to connect to ONS 15454s from within a firewall or if no firewall is used (default).
- Standard Constant—Use Port 683, the CORBA default port number.
- Other Constant—If Port 683 is not used, enter the IIOP port defined by your administrator.

Step 4 Click **Apply**. A warning appears telling you that the port change will apply during the next CTC login.

Step 5 Click **OK**.

Step 6 In the Preferences dialog box, click **OK**.

Step 7 To access the ONS 15454 using the IIOP port, log out of CTC then log back in. (To log out, choose **Exit** from the File menu).

Step 8 Return to your originating procedure (NTP).

NTP-G28 Set Up SNMP

Purpose	This procedure provisions the SNMP parameters so that you can use SNMP management software with the ONS 15454.
Tools/Equipment	None
Prerequisite Procedures	NTP-G22 Verify Common Card Installation, page 3-2
Required/As Needed	Required if SNMP is used at your installation.
Onsite/Remote	Onsite or remote
Security Level	Provisioning or higher

Step 1 Complete the "DLP-G46 Log into CTC" task on page 2-25 at the node where you want to set up SNMP. If you are already logged in, continue with Step 2.

Step 2 In node view, click the **Provisioning** > **SNMP** tabs.

Step 3 In the Trap Destinations area, click **Create**.

Step 4 Complete the following in the Create SNMP Trap Destination dialog box (Figure 3-7):

- Destination IP Address—Type the IP address of your network management system. If the node you are logged into is an ENE, set the destination address to the GNE.
- Community—Type the SNMP community name. For a description of SNMP community names, refer to the *Cisco ONS 15454 SONET and DWDM Troubleshooting Guide.*

Note The community name is a form of authentication and access control. The community name assigned to the ONS 15454 is case-sensitive and must match the community name of the network management system (NMS).

- UDP Port—The default User Datagram Protocol (UDP) port for SNMP is 162. If the node is an ENE in a proxy server network, the UDP port must be set to the GNE's SNMP relay port, which is 391.
- Trap Version—Choose either SNMPv1 or SNMPv2. Refer to your NMS documentation to determine whether to use SNMP v1 or v2.

Figure 3-7 Creating an SNMP Trap

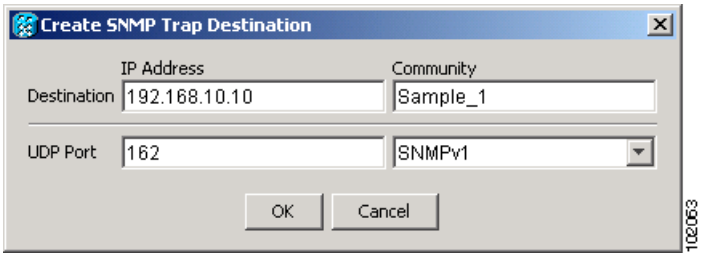

Step 5 Click **OK**. The node IP address of the node where you provisioned the new trap destination appears in the Trap Destinations area.

Step 6 Click the node IP address in the Trap Destinations area. Verify the SNMP information that appears in the Selected Destination list.

Step 7 If you want the SNMP agent to accept SNMP SET requests on certain MIBs, click the **Allow SNMP Sets** check box. If this box is not checked, SET requests are rejected.

Step 8 If you want to set up the SNMP proxy feature to allow network management, message reporting, and performance statistic retrieval across ONS firewalls, click the **Enable SNMP Proxy** check box located on the SNMP tab.

Note The ONS firewall proxy feature only operates on nodes running Software Release 4.6 or later. Using this feature effectively breaches the ONS firewall to exchange management information.

For more information about the SNMP proxy feature, refer to the *Cisco ONS 15454 SONET and DWDM Troubleshooting Guide.*

Step 9 Click **Apply**.

Step 10 If you are setting up SNMP proxies, for each trap destination address you can set up to three relays that send SNMP trap error counts back to NE:

a. Click the first trap destination IP address. The address and its community name appear in the Destination fields.

b. Enter up to three SNMP Proxy relay addresses and community names in the fields for Relay A, Relay B, and Relay C.

Note The community names specified for each relay node must match one of the provisioned SNMP community names in the NE.

Note The SNMP proxy directs SNMP traps from this node through IpA to IpB to IpC to the trap destination. Ensure that you enter the IP addresses in the correct order so that this sequence runs correctly.

Step 11 Click **Apply**.

Stop. **You have completed this procedure**.

NTP-G29 Preprovision a Slot

Purpose	This procedure preprovisions the card slots in CTC based upon the network plan that was calculated for your site by Cisco MetroPlanner. (If you do not have Cisco MetroPlanner, you must enter the DWDM provisioning manually with a customized design.) Preprovisioning the slots ensures that the physical cards are installed in the slots anticipated by the automatic node setup parameters that will be imported from Cisco MetroPlanner.
Tools/Equipment	None
Prerequisite Procedures	Chapter 2, "Connect the PC and Log into the GUI" One of the following: • Cisco MetroPlanner Release 2.5 and the electronic site plan prepared for your network. • An hard copy of the node layout prepared by Cisco MetroPlanner for your network.
Required/As Needed	As needed
Onsite/Remote	Onsite or remote
Security Level	Provisioning or higher

Step 1 Complete the "DLP-G46 Log into CTC" task on page 2-25 at the node where you want to preprovision the slots. If you are already logged in, continue with Step 2.

Step 2 If you have Cisco MetroPlanner R2.5, launch the application and continue with Step 4. If you do not have Cisco MetroPlanner, you must have a print out of the node layout prepared by Cisco MetroPlanner. R2.5. If so, continue with Step 6. Do not continue if a node layout prepared by Cisco MetroPlanner is not available.

Step 3 In Cisco MetroPlanner, load the network plan for your installation. (For information about using Cisco MetroPlanner, refer to the *Cisco MetroPlanner DWDM Operations Guide*.)

Step 4 In Cisco MetroPlanner, display the Site Dialog window for the node you are provisioning. A site installation example is shown in Figure 3-8.

Figure 3-8 Cisco MetroPlanner Site Dialog Window

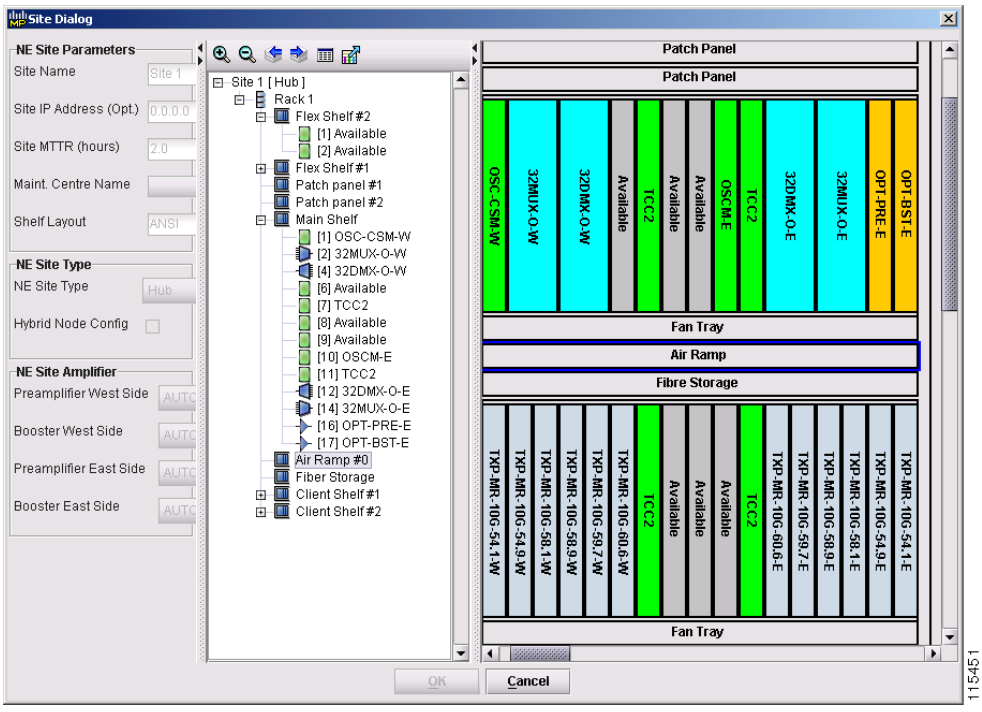

Step 5 Arrange the CTC and the Cisco MetroPlanner windows so you can view both windows simultaneously.

Step 6 In CTC node view, right-click an empty slot where you will install a card.

Step 7 From the Add Card popup menu, choose the card type that will be installed based on the Cisco MetroPlanner Site Dialog window. Only cards that can be installed in the slot appear in the Add Card popup menu.

Note When you preprovision a slot, the card appears purple in the CTC shelf graphic, rather than white when a card is installed in the slot. NP (not present) on the card graphic indicates that the card is not physically installed.

Step 8 Repeat Step 7 until all the cards shown in the Cisco MetroPlanner the Site Dialog window are provisioned in CTC.

Stop. You have completed this procedure.

NTP-G30 Install the DWDM Cards

Purpose	This procedure describes how to install DWDM cards (OPT-PRE, OPT-BST, 32MUX-O, 32DMX-O, 32DMX, 32WSS, 4MD-xx.x, AD-1C-xx.x, AD-2C-xx.x, AD-4C-xx.x, AD-1B-xx.x, AD-4B-xx.x, OSCM, and OSC-CSM).
Tools/Equipment	OPT-PRE, OPT-BST, 32MUX-O, 32DMX-O, 32DMX, 32WSS, 4MD-xx.x, AD-1C-xx.x, AD-2C-xx.x, AD-4C-xx.x, AD-1B-xx.x, AD-4B-xx.x, OSCM, or OSC-CSM cards (as applicable)
Prerequisite Procedures	DLP-G33 Install the TCC2 Card, page 1-73
Required/As Needed	As needed
Onsite/Remote	Onsite
Security Level	Provisioning or higher

Warning **During this procedure, wear grounding wrist straps to avoid damaging the card. Do not directly touch the backplane with your hand or any metal tool due to electrical hazard.**

Warning **Complies with 21 CFR 1040.10 and 1040.11 except for deviations pursuant to Laser Notice No. 50, dated July 26, 2001.**

Warning **Class 1M Laser Product.**

Warning **Invisible laser radiation may be emitted from the end of the unterminated fiber cable or connector. Do not stare into the beam or view directly with optical instruments. Viewing the laser output with certain optical instruments (for example, eye loupes, magnifiers, and microscopes) within a distance of 100 mm may pose an eye hazard. Use of controls or adjustments or performance of procedures other than those specified may result in hazardous radiation exposure.**

Caution Always use the supplied ESD wristband when working with a powered ONS 15454. Plug the wristband cable into the ESD jack located on the lower-right outside edge of the shelf assembly.

Note If protective clips are installed on the backplane connectors of the cards, remove the clips before installing the cards.

Note If you install a card incorrectly, the FAIL LED flashes continuously.

Step 1 Display the card installation plan for the node using one of the following sources:

- The Cisco MetroPlanner Site Dialog window (Figure 3-8) for the node you are provisioning.
- CTC node view with slots preprovisioned based on the Cisco MetroPlanner Site Dialog window.

- Written slot plan. The plan must be based on the Cisco MetroPlanner Site Dialog window for your installation.

Step 2 Double check that the card placement fits within the following installation guidelines:

- OPT-BST—Any open east and west pair of slots but usually installed in Slots 1 and 17
- OPT-PRE—Any open east and west pair of slots but usually installed in Slots 2 and 16
- OSCM—Slots 8 and 10
- OSC-CSM—Any open east and west pair of slots
- 32MUX-O, 32DMX-O, 32DMX, 32WSS—Double-slot card; any two open slots.
- AD-xB-xx.x, AD-xC-xx.x, and 4MD-xx.x—Any open slots

Step 3 Remove the DWDM card from its packaging, then remove the protective caps from the backplane connectors.

Step 4 Open the card latches/ejectors.

Step 5 Use the latches/ejectors to firmly slide the card along the slot guide rails until the card plugs into the receptacle at the back of the slot.

Step 6 Verify that the card is inserted correctly and close the latches/ejectors on the card.

Note It is possible to close the latches/ejectors when the card is not completely plugged into the backplane. Ensure that you cannot insert the card any further.

Step 7 Verify the LED activity:

- The FAIL LED turns on for approximately 35 seconds.
- The FAIL LED blinks for approximately 40 seconds.
- All LEDs turn on and then turn off within 5 seconds.
- If new software is being downloaded to the card, the ACT and SF LEDs blink for 20 seconds to 3.5 minutes, depending on the card type.
- The ACT LED turns on.
- The signal fail (SF) LED stays on until all card ports connect to their far-end counterparts and a signal is present.

Step 8 If the card does not boot up properly, or the LED activity does not mimic Step 7, check the following:

- When a physical card type does not match the type of card provisioned for that slot in CTC, the card might not boot. If a DWDM card does not boot, open CTC and ensure that the slot is not provisioned for a different card type before assuming that the card is faulty.
- If the red FAIL LED does not turn on, check the power.
- If you insert a card into a slot provisioned for a different card, all LEDs turn off.
- If the red FAIL LED is on continuously or the LEDs behave erratically, the card is not installed. Remove the card and repeat Steps 3 to 7. If the card does not boot up properly the second time, it may be defective. Contact your next level of support.

Note The DWDM node type is determined by the cards that are installed. For example, if two 32DMX-O and two 32MUX-O cards are installed but no AD-xC or AD-xB cards are installed, CTC considers the node a hub node. However, if one 32DMX-O and one 32MUX-O card are installed with no AD-xC or AD-xB cards, CTC considers the node a terminal node. For more information, refer to Chapter 14, "Card Reference."

Step 9 Repeat Steps 3 through 8 until all the DWDM cards are installed in the node.

Step 10 If you installed OPT-PRE cards, complete one of the following based upon your MetroPlanner site plan. If an OPT-PRE card is not installed, continue with Step 11.

- If the site plan includes DCUs, complete the "NTP-G31 Install the DWDM Dispersion Compensating Units" procedure on page 3-28.
- If the site plan does not include DCUs, install a 5 dB attenuator between the OPT-PRE DC TX and RX ports.

Step 11 Continue with the "NTP-G32 Install the Transponder and Muxponder Cards" procedure on page 3-30.

Stop. You have completed this procedure.

NTP-G31 Install the DWDM Dispersion Compensating Units

Purpose	This procedure describes how to install the dispersion compensating units (DCU-xx.x) for DWDM shelves and is required if OPT-PRE cards are installed.
Tools/Equipment	DCU-xx.x cards
Prerequisite Procedures	NTP-G15 Install the Common Control Cards, page 1-72 NTP-G30 Install the DWDM Cards, page 3-26 DLP-G27 Install the DCU Shelf Assembly, page 1-67
Required/As Needed	As needed
Onsite/Remote	Onsite
Security Level	Provisioning or higher

Warning **Complies with 21 CFR 1040.10 and 1040.11 except for deviations pursuant to Laser Notice No. 50, dated July 26, 2001.**

Warning **Class 1M laser product.**

Warning **Invisible laser radiation may be emitted from the end of the unterminated fiber cable or connector. Do not stare into the beam or view directly with optical instruments. Viewing the laser output with certain optical instruments (for example, eye loupes, magnifiers, and microscopes) within a distance of 100 mm may pose an eye hazard. Use of controls or adjustments or performance of procedures other than those specified may result in hazardous radiation exposure.**

Caution Always use the supplied ESD wristband when working with a powered ONS 15454. Plug the wristband cable into the ESD jack located on the lower-right outside edge of the shelf assembly.

Note If protective clips are installed on the backplane connectors of the DCUs, remove the clips before installing the units.

Note If a DCU is not installed and OPT-PRE cards are installed, insert a 5 dB attenuator between the OPT-PRE DC TX and RX ports.

Step 1 Pull the DCU latch inward with your finger.

Step 2 Firmly slide the DCU along the guide rails until the card plugs into the receptacle at the back of the horizontal dispersion compensating card slot at the top of the shelf.

Note The west DCU is commonly installed on the left side and the east DCU is commonly installed on the right side.

Note If you install the wrong DCU in a slot, remove the DCU and install the correct one.

Step 3 Release the finger latch.

Note It is possible to close the latch when the DCU is not completely plugged into the backplane. Ensure that you cannot insert the DCU any further.

Step 4 Verify that the DCU is engaged with the backplane by grasping and gently pulling the card handle. If the card does not move, it is fully installed. If it moves, repeat 2 and 3.

Step 5 Continue with the "NTP-G32 Install the Transponder and Muxponder Cards" procedure on page 3-30.

Stop. You have completed this procedure.

NTP-G32 Install the Transponder and Muxponder Cards

Purpose	This procedure describes how to install the ONS 15454 transponder (TXP) and muxponder (MXP) cards.
Tools/Equipment	TXP_MR_10G, TXP_MR_10E, TXP_MR_2.5G, TXPP_MR_2.5G, MXP_2.5G_10G, MXP_2.5G_10E, MXP_MR_2.5G, and MXPP_MR_2.5G cards (as applicable)
Prerequisite Procedures	NTP-G15 Install the Common Control Cards, page 1-72
Required/As Needed	As needed
Onsite/Remote	Onsite
Security Level	None

Warning **During this procedure, wear grounding wrist straps to avoid ESD damage to the card. Do not directly touch the backplane with your hand or any metal tool due to electrical hazard.**

Warning **Class 1 Laser Product.**

Warning **Complies with 21 CFR 1040.10 and 1040.11 except for deviations pursuant to Laser Notice No. 50, dated July 26, 2001.**

Warning **Invisible laser radiation may be emitted from the end of the unterminated fiber cable or connector. Do not stare into the beam or view directly with optical instruments. Viewing the laser output with certain optical instruments (for example, eye loupes, magnifiers, and microscopes) within a distance of 100 mm may pose an eye hazard. Use of controls or adjustments or performance of procedures other than those specified may result in hazardous radiation exposure.**

Caution Always use the supplied ESD wristband when working with a powered ONS 15454. Plug the wristband cable into the ESD jack located on the lower-right outside edge of the shelf assembly.

Note If protective clips are installed on the backplane connectors of the cards, remove the clips before installing the cards.

Note If you install a card incorrectly, the FAIL LED flashes continuously.

Step 1 Display card installation plan for the node using one of the following sources:

- The Cisco MetroPlanner Site Dialog window for the node you are provisioning.
- CTC node view with slots preprovisioned based on the Cisco MetroPlanner Site Dialog window.

- Written slot plan. The plan must be based on the Cisco MetroPlanner Site Dialog window for your installation.

Step 2 Remove the TXP or MXP card from its packaging, then remove the protective clips from the backplane connectors.

Step 3 Open the card latches/ejectors.

Step 4 Use the latches/ejectors to firmly slide the TXP or MXP card along the guide rails until the card plugs into the receptacle at the back of the slot.

Note If you install the wrong card in a slot, complete the "NTP-G107 Remove and Replace DWDM Cards" procedure on page 11-12.

Step 5 Verify that the card is inserted correctly and close the latches/ejectors on the card.

Note It is possible to close the latches and ejectors when the card is not completely plugged into the backplane. Ensure that you cannot insert the card any further.

Step 6 Verify the LED activity:

- The red FAIL LED turns on for 20 to 30 seconds.
- The red FAIL LED blinks for 35 to 45 seconds.
- All LEDs blink once and turn off for 5 to 10 seconds.
- The ACT or ACT/STBY LED turns on. The SF LED can persist until all card ports connect to their far-end counterparts and a signal is present.

Step 7 If the card does not boot up properly, or the LED activity does not mirror Step 6, check the following:

- When a physical card type does not match the type of card provisioned for that slot in CTC, the card might not boot. If a TXP or MXP card does not boot, open CTC and ensure that the slot is not provisioned for a different card type before assuming that the card is faulty.
- If the red FAIL LED does not turn on, check the power.
- If you insert a card into a slot provisioned for a different card, all LEDs turn off.
- If the red FAIL LED is on continuously or the LEDs behave erratically, the card is not installed properly. Remove the card and repeat Steps 3 to 6.

Step 8 If the TXP or MXP requires a small-form pluggable (SFP), complete the "DLP-G63 Install an SFP" task on page 3-32. To remove an SFP, complete the "DLP-G64 Remove an SFP" task on page 3-32.

Note SFPs must be provisioned in CTC. You will be directed to the "NTP-G94 Provision Pluggable Port Modules" procedure on page 10-29 during network turn up. For more information about SFPs, see the "14.13 SFP Modules" section on page 14-123.

Stop. You have completed this procedure.

DLP-G63 Install an SFP

Purpose	This task installs SFPs into TXP and MXP cards.
Tools/Equipment	None
Prerequisite Procedures	NTP-G32 Install the Transponder and Muxponder Cards, page 3-30
Required/As Needed	As needed
Onsite/Remote	Onsite or remote
Security Level	Provisioning or higher

Step 1 Verify that the SFP is correct for your network and TXP or MXP card (see Table 14-67 on page 14-123). Check that you are installing compatible SFPs, for example, SX to SX or LX/LH to LX/LH.

Step 2 Install the SFP:

- For a mylar tab SFP: slide the SFP into the slot.
- For an actuator/button SFP: slide the SFP all the way into the slot until you hear a click.
- For a bail clasp SFP: latch (flip upwards) the bail clasp before inserting into the slot then slide into the slot.

Note SFPs are keyed to prevent incorrect installation.

Step 3 Do not remove the protective caps from the SFP until you are ready to attach the network fiber-optic cable.

Note SFPs must be provisioned in CTC. You will be directed to the "NTP-G94 Provision Pluggable Port Modules" procedure on page 10-29 during network turn up. For more information about SFPs, see the "14.13 SFP Modules" section on page 14-123.

Step 4 Return to your originating procedure (NTP).

DLP-G64 Remove an SFP

Purpose	This task removes SFPs from TXP and MXP cards.
Tools/Equipment	None
Prerequisite Procedures	NTP-G32 Install the Transponder and Muxponder Cards, page 3-30
Required/As Needed	As needed
Onsite/Remote	Onsite or remote
Security Level	Provisioning or higher

Step 1 Disconnect the network fiber cable from the GBIC SC-type connector or SFP/XFP LC-type connector.

Step 2 Release the SFP from the slot by performing one of the following actions (depending which latch is on the SFP):

- For a mylar tab SFP: pull out the mylar tab.
- For an actuator/button SFP: press the actuator/button.
- For a bail clasp SFP: unlatching the bail clasp and swing it downward.

Step 3 Slide the SFP out of the slot.

Step 4 Return to your originating procedure (NTP).

NTP-G33 Create a Y-Cable Protection Group

Purpose	This task creates a Y-cable protection group between the client ports of two transponder (TXP_MR_10G, TXP_MR_10E, or TXP_MR_2.5G) or two muxponder (MXP_2.5G_10G, MXP_2.5G_10E, MXP_MR_2.5G, MXPP_MR_2.5G) cards.
Tools/Equipment	Installed TXP or MXP cards.
Prerequisite Procedures	DLP-G46 Log into CTC, page 2-25
Required/As Needed	As needed
Onsite/Remote	Onsite or remote
Security Level	Provisioning or higher

Note Loss of Pointer Path (LOP-P) alarms can occur on a split signal if the ports are not in a Y-cable protection group.

Step 1 Verify that the TXP or MXP cards are installed according to the Y-cable requirements specified in Table 3-3. This table describes the protection types available in the ONS 15454 for DWDM client cards.

Table 3-3 Protection Types

Type	Cards	Description and Installation Requirements
Y Cable	MXP_2.5_10G MXP_2.5_10E TXP_MR_10G TXP_MR_10E TXP_MR_2.5G MXP_MR_2.5G	Pairs a working transponder or muxponder card/port with a protect transponder or muxponder card/port. The protect port must be on a different card than the working port and it must be the same card type as the working port. The working and protect port numbers must be the same, that is, Port 1 can only protect Port 1, Port 2 can only protect Port 2, etc.
Splitter	TXPP_MR_2.5G MXPP_MR_2.5G	A splitter protection group is automatically created when a TXPP_MR_2.5G or MXPP_MR_2.5G card is installed. You can edit the splitter protection group name.

Step 2 Verify that pluggable port modules (PPM) are provisioned for the same payload and payload rate on the TXP and MXP cards where you will create the Y-cable protection group. You can use either of the following methods:

- In node view, move your mouse over the TXP or MXP client port. If a PPM is provisioned, two dots appear in the port graphic, and the port and PPM payload and rate appear when you move the mouse over the port.
- Display the TXP or MXP card in card view. Click the **Provisioning > Pluggable Port Module** tabs. Verify that a PPM is provisioned in the Pluggable Port Module area, and the payload type and rate is provisioned for it in the Selected PPM area.

The PPM payload and payload rate must be the same for both TXP or MXP cards.

Step 3 In node view, click the **Provisioning** > **Protection** tabs.

Step 4 In the Protection Groups area, click **Create**.

Step 5 In the Create Protection Group dialog box, enter the following:

- Name—Type a name for the protection group. The name can have up to 32 alphanumeric (a-z, A-Z, 0-9) characters. Special characters are permitted. For TL1 compatibility, do not use question mark (?), backslash (\), or double quote (“) characters.
- Type—Choose **Y Cable** from the drop-down list.
- Protect Port—Choose the protect port from the drop-down list. The menu displays the available transponder or muxponder ports. If transponder or muxponder cards are not installed, no ports appear in the drop-down list.

After you choose the protect port, a list of ports available for protection appear in the Available Ports list, as shown in Figure 3-9. If no cards are available, no ports appear. If this occurs, you can not complete this task until you install the physical cards or preprovision the ONS 15454 slots using the “NTP-G29 Preprovision a Slot” procedure on page 3-24.

Figure 3-9 Creating a Y-Cable Protection Group

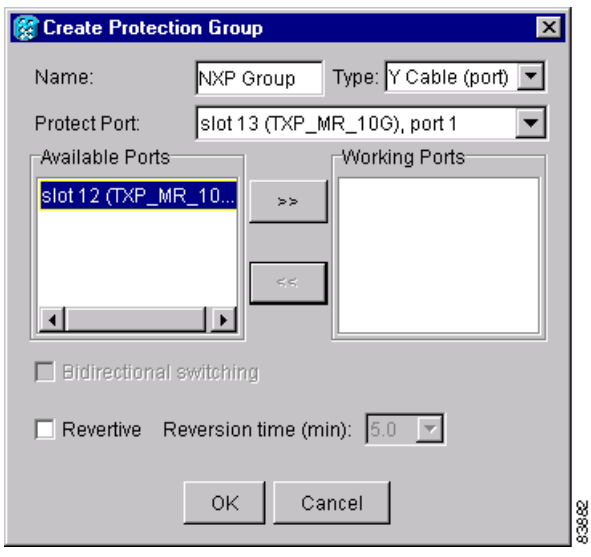

Step 6 From the Available Ports list, choose the port that will be protected by the port you selected in Protect Ports. Click the top arrow button to move each port to the Working Ports list.

Step 7 Complete the remaining fields:

- Revertive—Check this check box if you want traffic to revert to the working port after failure conditions remain corrected for the amount of time entered in the Reversion Time field.
- Reversion time—If Revertive is checked, select a reversion time from the drop-down list. The range is 0.5 to 12.0 minutes. The default is 5.0 minutes. Reversion time is the amount of time that will elapse before the traffic reverts to the working card. Traffic can revert when conditions causing the switch are cleared.

Step 8 Click **OK**.

Step 9 Return to your originating procedure (NTP).

NTP-G34 Install Fiber-Optic Cables on DWDM Cards

Purpose	This procedure installs the fiber-optic cables to DWDM cards and dispersion compensating cards.
Tools/Equipment	Fiber-optic cables
Prerequisite Procedures	NTP-G30 Install the DWDM Cards, page 3-26 NTP-G31 Install the DWDM Dispersion Compensating Units, page 3-28 (as applicable)
Required/As Needed	As needed
Onsite/Remote	Onsite
Security Level	None

Warning **Complies with 21 CFR 1040.10 and 1040.11 except for deviations pursuant to Laser Notice No. 50, dated July 26, 2001.**

Warning **Class 1M laser product.**

Note In this procedure, you will generally connect fibers in an east-to-west or west-to-east pattern. “West” refers to cards and ports in Slots 1, 2, 3, 4, 5, 6, and 8. “East” refers to cards and ports installed in Slots 10, 12, 13, 14, 15, 16, and 17.

Step 1 Display your site plan in Cisco MetroPlanner, or refer to a printed copy of the MetroPlanner internal connections table. For information about Cisco MetroPlanner, refer to the *Cisco MetroPlanner DWDM Operations Guide*.

Step 2 Navigate to the Internal Connections table for the node you are provisioning (Figure 3-10).The internal connections table identifies the patch cord that you must cable by their end points. Position 1 identifies the fiber start point; Position 2 indicates the fiber end point. The patch cord end points are identified by site, slot, and port. Information provided by the Cisco MetroPlanner internal connections table includes:

- Site—The DWDM network site number for the node where you are provisioning the internal connections.
- IP Address—The node IP address.

- Position-1—The first position rack, shelf, and slot. For example, Rack#1.Main Shelf.02 refers to Slot 2 in the Main Shelf of Rack #1. Refer to the Cisco MetroPlanner Site Dialog window for rack and shelf names and locations.
- Unit-1—The ONS 15454 DWDM card (unit) that is installed in the first position slot.
- Port#-1—The port identifier shown in the CTC for the first Position-1 connection.
- Port ID-1—The port identifier shown in TL1 for the Position-1 connection.
- Port Label-1—The name of the physical port printed on the card's front plate and shown in CTC card view for the Position-1 connection.
- Attenuator—Indicates whether attenuation is required.
- Patchcord Type—Indicates the level of attenuation that is required, if needed.
- Position-2—The second position rack, shelf, and slot. For example, Rack#1.Main Shelf.02 refers to Slot 2 in the Main Shelf of Rack #1. Refer to the Cisco MetroPlanner Site Dialog window for rack and shelf names and locations.
- Unit-2—The ONS 15454 DWDM card (unit) that is installed in the Position-2 slot.
- Port #2—The port identifier shown in CTC for the first Position-2 connection.
- Port ID-2—The port identifier shown in TL1 for the Position-2 connection.
- Port Label-2—The name of the physical port printed on the card's front plate and shown in CTC card view for the Position-2 connection.
- Manually Set—Indicates whether you must create the connection manually in CTC.

Figure 3-10 Cisco MetroPlanner Internal Connections Table

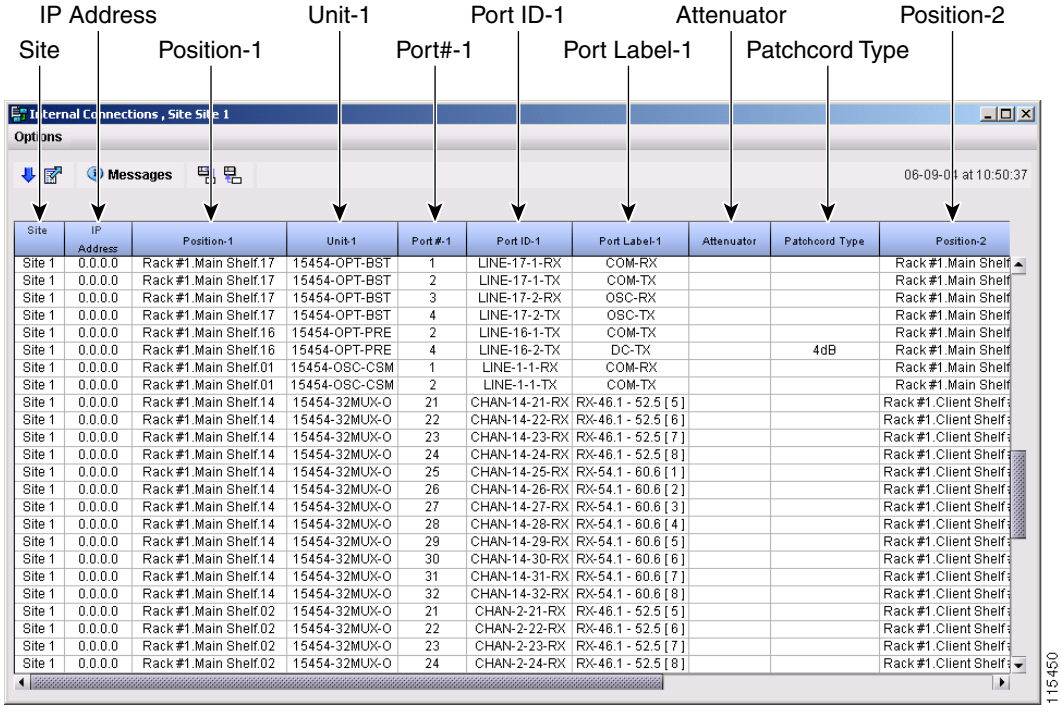

Site	IP Address	Position-1	Unit-1	Port #-1	Port ID-1	Port Label-1	Attenuator	Patchcord Type	Position-2
Site 1	0.0.0.0	Rack #1.Main Shelf.17	15454-OPT-BST	1	LINE-17-1-RX	COM-RX			Rack #1.Main Shelf
Site 1	0.0.0.0	Rack #1.Main Shelf.17	15454-OPT-BST	2	LINE-17-1-TX	COM-TX			Rack #1.Main Shelf
Site 1	0.0.0.0	Rack #1.Main Shelf.17	15454-OPT-BST	3	LINE-17-2-RX	OSC-RX			Rack #1.Main Shelf
Site 1	0.0.0.0	Rack #1.Main Shelf.17	15454-OPT-BST	4	LINE-17-2-TX	OSC-TX			Rack #1.Main Shelf
Site 1	0.0.0.0	Rack #1.Main Shelf.16	15454-OPT-PRE	2	LINE-16-1-TX	COM-TX			Rack #1.Main Shelf
Site 1	0.0.0.0	Rack #1.Main Shelf.16	15454-OPT-PRE	4	LINE-16-2-TX	DC-TX		4dB	Rack #1.Main Shelf
Site 1	0.0.0.0	Rack #1.Main Shelf.01	15454-OSC-CSM	1	LINE-1-1-RX	COM-RX			Rack #1.Main Shelf
Site 1	0.0.0.0	Rack #1.Main Shelf.01	15454-OSC-CSM	2	LINE-1-1-TX	COM-TX			Rack #1.Main Shelf
Site 1	0.0.0.0	Rack #1.Main Shelf.14	15454-32MUX-O	21	CHAN-14-21-RX	RX-46.1 - 52.5 [5]			Rack #1.Client Shelf
Site 1	0.0.0.0	Rack #1.Main Shelf.14	15454-32MUX-O	22	CHAN-14-22-RX	RX-46.1 - 52.5 [6]			Rack #1.Client Shelf
Site 1	0.0.0.0	Rack #1.Main Shelf.14	15454-32MUX-O	23	CHAN-14-23-RX	RX-46.1 - 52.5 [7]			Rack #1.Client Shelf
Site 1	0.0.0.0	Rack #1.Main Shelf.14	15454-32MUX-O	24	CHAN-14-24-RX	RX-46.1 - 52.5 [8]			Rack #1.Client Shelf
Site 1	0.0.0.0	Rack #1.Main Shelf.14	15454-32MUX-O	25	CHAN-14-25-RX	RX-54.1 - 60.6 [1]			Rack #1.Client Shelf
Site 1	0.0.0.0	Rack #1.Main Shelf.14	15454-32MUX-O	26	CHAN-14-26-RX	RX-54.1 - 60.6 [2]			Rack #1.Client Shelf
Site 1	0.0.0.0	Rack #1.Main Shelf.14	15454-32MUX-O	27	CHAN-14-27-RX	RX-54.1 - 60.6 [3]			Rack #1.Client Shelf
Site 1	0.0.0.0	Rack #1.Main Shelf.14	15454-32MUX-O	28	CHAN-14-28-RX	RX-54.1 - 60.6 [4]			Rack #1.Client Shelf
Site 1	0.0.0.0	Rack #1.Main Shelf.14	15454-32MUX-O	29	CHAN-14-29-RX	RX-54.1 - 60.6 [5]			Rack #1.Client Shelf
Site 1	0.0.0.0	Rack #1.Main Shelf.14	15454-32MUX-O	30	CHAN-14-30-RX	RX-54.1 - 60.6 [6]			Rack #1.Client Shelf
Site 1	0.0.0.0	Rack #1.Main Shelf.14	15454-32MUX-O	31	CHAN-14-31-RX	RX-54.1 - 60.6 [7]			Rack #1.Client Shelf
Site 1	0.0.0.0	Rack #1.Main Shelf.14	15454-32MUX-O	32	CHAN-14-32-RX	RX-54.1 - 60.6 [8]			Rack #1.Client Shelf
Site 1	0.0.0.0	Rack #1.Main Shelf.02	15454-32MUX-O	21	CHAN-2-21-RX	RX-46.1 - 52.5 [5]			Rack #1.Client Shelf
Site 1	0.0.0.0	Rack #1.Main Shelf.02	15454-32MUX-O	22	CHAN-2-22-RX	RX-46.1 - 52.5 [6]			Rack #1.Client Shelf
Site 1	0.0.0.0	Rack #1.Main Shelf.02	15454-32MUX-O	23	CHAN-2-23-RX	RX-46.1 - 52.5 [7]			Rack #1.Client Shelf
Site 1	0.0.0.0	Rack #1.Main Shelf.02	15454-32MUX-O	24	CHAN-2-24-RX	RX-46.1 - 52.5 [8]			Rack #1.Client Shelf

Step 3 Export the internal connections table:

a. Click **Export**.

b. Enter a file name in the File Name field of the Save Table dialog box.

c. In the Files of Type field, choose **HTML** (to save the file as an HTML file viewable in a web browser), or **Tab Separated Values** to save the file as a tab-separated text file, which you can import into a spreadsheet application.

d. Click **Save**.

Step 4 Open the exported Cisco MetroPlanner internal connections file in a web browser (or spreadsheet application), and then print the file.

Step 5 Verify that fibers are available to complete the connections shown in the Cisco MetroPlanner internal connections table.

Step 6 Complete the "NTP-G115 Clean Fiber Connectors" procedure on page 11-32 for all fiber connections, even new fiber. Dust particles can degrade performance. Put caps on any fiber connectors that are not used.

Step 7 Complete the "DLP-G65 Install Fiber-Optic Cables for OSC Link Terminations on All Nodes" task on page 3-37.

Step 8 As required, complete the following tasks based on the DWDM node type:

- "DLP-G66 Install Fiber-Optic Cables for a Hub Node" task on page 3-40
- "DLP-G67 Install Fiber-Optic Cables for a Terminal Node" task on page 3-43.
- "DLP-G68 Install Fiber-Optic Cables for a Line Amplifier Node" task on page 3-44.
- "DLP-G70 Install Fiber-Optic Cables for an Amplified or Passive OADM Node" task on page 3-48.
- "DLP-G69 Install Fiber-Optic Cables for an OSC Regeneration Node" task on page 3-46
- "DLP-G71 Install Fiber-Optic Cables for an ROADM Node" task on page 3-53

Step 9 Continue with the "NTP-G35 Route Fiber-Optic Cables" procedure on page 3-55.

Stop. You have completed this procedure.

DLP-G65 Install Fiber-Optic Cables for OSC Link Terminations on All Nodes

Purpose	This task explains how to install fiber-optic cables for optical service channels creation on all DWDM shelves.
Tools	Fiber-optic cables
Prerequisite Procedures	NTP-G115 Clean Fiber Connectors, page 11-32
Required/As Needed	As needed
Onsite/Remote	Onsite
Security Level	None

Step 1 Refer to the Cisco MetroPlanner internal connections table for your site when completing OSC connections. Before you begin the OSC connections, read the following rules:

- The OPT-BST and the OSC-CSM are the only cards that directly interface with the line (span) fiber.
- The OSCM only carries optical service channels, not DWDM channels.

- The OSCM and the OSC-CSM cannot both be installed on the same side of the shelf (east or west). You can have different cards on each side, for example an OSCM on the west side and an OSC-CSM on the east side.
- When an OPT-BST and an OSC-CSM are both used on the same side of the node, the OPT-BST combines the supervision channel with the DWDM channels and the OSC-CSM acts as an OSCM; it does not carry DWDM traffic.
- If an OPT-BST and OSCM card are installed on the east side, the east OPT-BST OSC RX port is connected to the east OSCM TX port, and the east OPT-BST OSC TX port is connected to the east OSCM RX port.
- If you have an OPT-BST and OSC-CSM card are installed on the east side, the east OPT-BST OSC RX port is connected to the east OSC-CSM LINE TX port, and the east OPT-BST OSC TX port is connected to the east OSC-CSM LINE RX port.
- If an OPT-BST and OSCM card are installed on the west side, The west OPT-BST OSC TX port is connected to the west OSCM RX port, and the west OPT-BST OSC RX port is connected to the west OSCM TX port.
- If you have an OPT-BST and OSC-CSM card are installed on the west side, the west OPT-BST OSC TX port is connected to the west OSC-CSM LINE RX port, and the west OPT-BST OSC RX port is connected to the west OSC-CSM LINE TX port.

Figure 3-11 shows an example of OSC fibering for a hub node with OSCM cards installed.

Figure 3-11 Fibering OSC Terminations—Hub Node with OSCM Cards

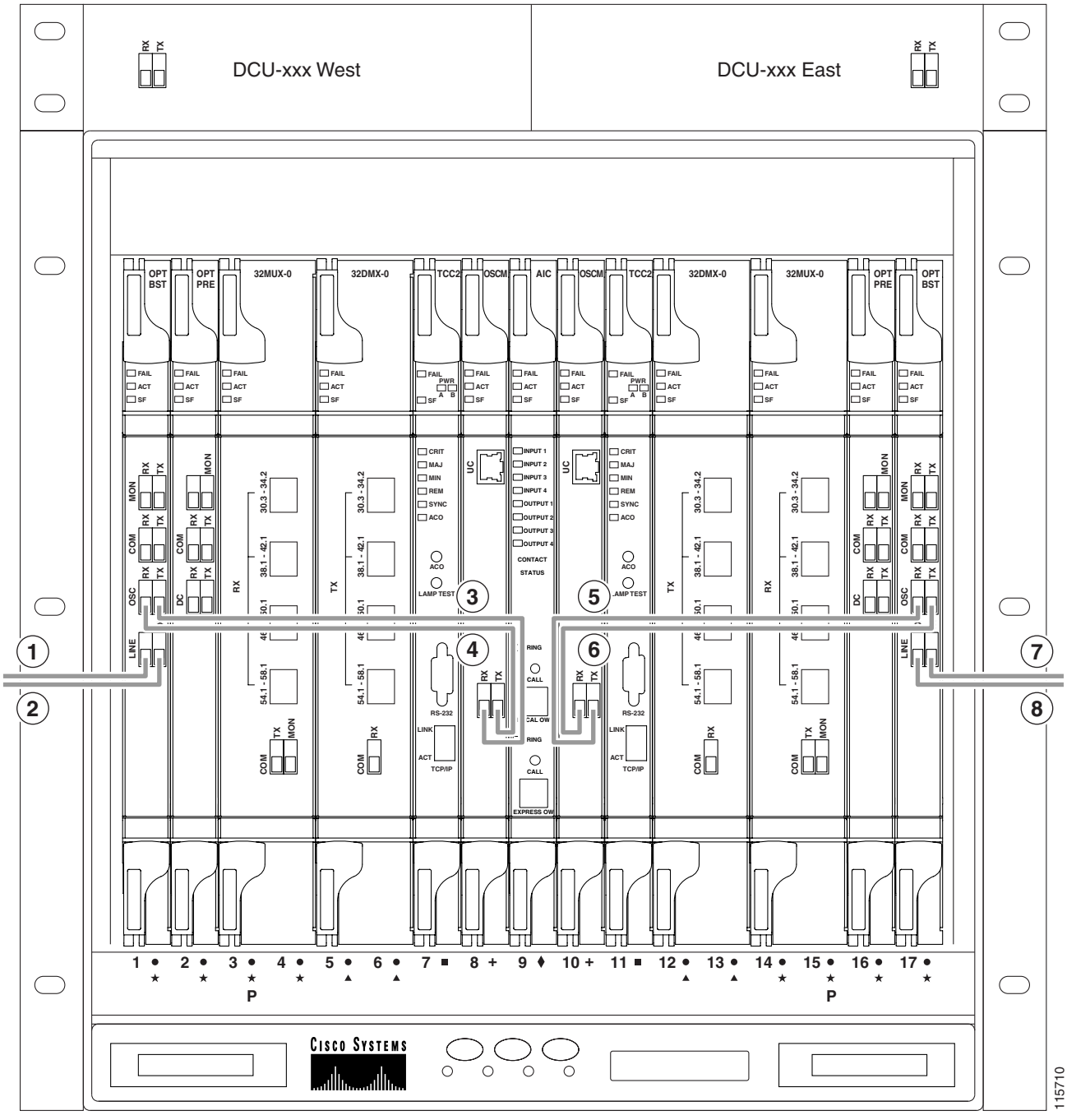

1	West OPT-BST LINE RX to east OPT-BST or OSC-CSM LINE TX on adjacent node
2	West OPT-BST LINE TX to east OPT-BST or OSC-CSM LINE RX on adjacent node
3	West OPT-BST OSC TX to west OSCM RX
4	West OPT-BST OSC RX to west OSCM TX
5	East OSCM TX to east OPT-BST OSC RX

6	East OSCM RX to east OPT-BST OSC TX
7	East OPT-BST LINE TX to west OPT-BST or OSC-CSM LINE RX on adjacent node
8	East OPT-BST LINE RX to west OPT-BST or OSC-CSM LINE TX on adjacent node

Step 2 Plug one end of a fiber into the west OPT-BST or OSC-CSM LINE TX connector and the other end into the adjacent node east OPT-BST or OSC-CSM LINE RX connector. Repeat in the other direction (east to west, TX to RX). Always connect the west line ports to the adjacent node east line ports.

Note Cards display an SF LED after the OSC terminations are created (see the "NTP-G38 Provision Terminations and Ring ID" procedure on page 3-60) and transmit and receive fibers are not connected correctly. For example, an RX port is connected to another RX port or a TX port is connected to another TX port.

Step 3 If OSCM cards are not installed, continue with Step 4. If OSCM cards are installed.

a. Plug one end of a fiber into the west OPT-BST OSC RX connector and the other end into west OSCM OSC TX connector.

b. Plug another fiber into the west OSCM OSC RX connector and the other end to the west OPT-BST OSC TX connector.

c. plug one end of a fiber into the east OPT-BST OSC RX connector and the other end into east OSCM TX connector.

d. Plug another fiber into the east OSCM OSC RX connector and the other end to the east OPT-BST OSC TX connector.

Step 4 Repeat Steps 2 and 3 at each node in the network.

Step 5 Return to your originating procedure (NTP).

DLP-G66 Install Fiber-Optic Cables for a Hub Node

Purpose	This task installs fiber-optic cables on a hub node DWDM shelf.
Tools	Fiber-optic cables
Prerequisite Procedures	NTP-G115 Clean Fiber Connectors, page 11-32
Required/As Needed	As needed
Onsite/Remote	Onsite
Security Level	None

Step 1 Refer to the Cisco MetroPlanner internal connections table for your site when completing connections. Before you begin hub node connections, read the following rules:

- The west OPT-BST or OSC-CSM card common (COM) TX port is connected to the west OPT-PRE COM RX port or the west 32DMX-O COM RX port.
- The west OPT-PRE COM TX port is connected to the west 32DMX-O COM RX port.
- The west 32MUX-O COM TX port is connected to the west OPT-BST or west OSC-CSM COM RX port.

- The east 32MUX-O COM TX port is connected to the east OPT-BST or east OSC-CSM COM RX port.
- The east OPT-BST or east OSC-CSM COM TX port is connected to the east OPT-PRE COM RX port or the east 32DMX-O COM RX port.
- The east OPT-PRE COM TX port is connected to the east 32DMX-O COM RX port.

Figure 3-12 shows an example of a hub node with cabling. In the example, OSCM cards are installed. If OSC-CSM are installed, they are usually installed in Slots 1and 17.

Figure 3-12 Fibering a Hub Node

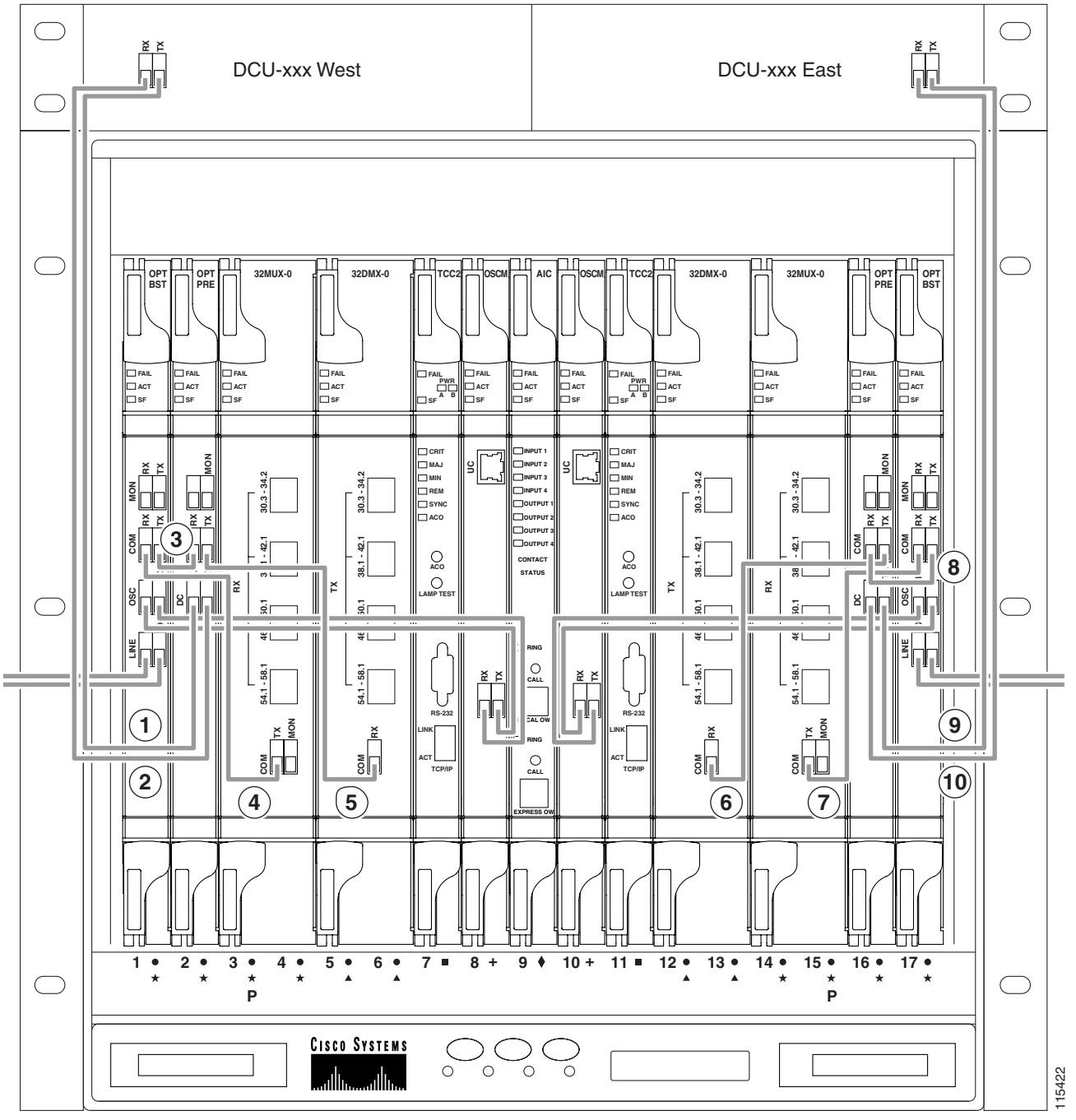

1	West DCU TX to west OPT-PRE DC RX[1]
2	West DCU RX to west OPT-PRE DC TX[1]
3	West OPT-BST COM TX to west OPT-PRE COM RX
4	West OPT-BST COM RX to west 32MUX-O COM TX
5	West OPT-PRE COM TX to west 32DMX-O COM RX

6	East 32DMX-O COM RX to east OPT-PRE COM TX
7	East 32MUX-O COM TX to east OPT-BST COM RX
8	East OPT-PRE COM RX to east OPT-BST COM TX
9	East DCU TX to east OPT-PRE DC RX[1]
10	East DCU RX to east OPT-PRE DC TX[1]

1. If a DCU is not installed, a 5 dB attenuator loop must be installed between the OPT-PRE DC ports.

Step 2 Plug one end of the fiber cable into the desired RX port and other end into the desired TX port.

Note Cards display an SF LED after the OSC terminations are created (see the "NTP-G38 Provision Terminations and Ring ID" procedure on page 3-60) and transmit and receive fibers are not connected correctly. For example, an RX port is connected to another RX port or a TX port is connected to another TX port.

Step 3 Repeat Step 2 until you have connected the nodes according to the site plan.

Step 4 Return to your originating procedure (NTP).

DLP-G67 Install Fiber-Optic Cables for a Terminal Node

Purpose	This task installs fiber-optic cables on a terminal node DWDM shelf.
Tools	Fiber-optic cables
Prerequisite Procedures	NTP-G115 Clean Fiber Connectors, page 11-32
Required/As Needed	As needed
Onsite/Remote	Onsite
Security Level	None

Step 1 Refer to the Cisco MetroPlanner internal connections table for your site when completing connections. Before you begin terminal node connections, read the following rules:

- A terminal site has only one side (as compared to a hub node, which has two sides). The terminal side can be either east or west.
- The terminal side OPT-BST or OSC-CSM card common (COM) TX port is connected to the terminal side OPT-PRE COM RX port or the 32DMX-O COM RX port.
- The terminal side OPT-PRE COM TX port is connected to the terminal side 32DMX-O COM RX port.
- The terminal side 32MUX-O COM TX port is connected to the terminal side OPT-BST or OSC-CSM COM RX port.

Step 2 Plug one fiber cable end into the desired RX port and other end into the desired TX port.

Note Cards display an SF LED after the OSC terminations are created (see the "NTP-G38 Provision Terminations and Ring ID" procedure on page 3-60) and transmit and receive fibers are not connected correctly. For example, an RX port is connected to another RX port or a TX port is connected to another TX port.

Step 3 Repeat Step 2 until you have connected the nodes according to the site plan.

Step 4 Return to your originating procedure (NTP).

DLP-G68 Install Fiber-Optic Cables for a Line Amplifier Node

Purpose	This task installs fiber-optic cables on a line amplifier node in a DWDM shelf.
Tools	Fiber-optic cables
Prerequisite Procedures	NTP-G115 Clean Fiber Connectors, page 11-32
Required/As Needed	As needed
Onsite/Remote	Onsite
Security Level	None

Step 1 Refer to the Cisco MetroPlanner internal connections table for your site when completing connections.Before you begin the line amplifier node connections, read the following rules:

- Line amplifier node layout allows all combinations of OPT-PRE and OPT-BST and allows you to use asymmetrical card choices in west-to-east and east-to-west configurations. For a given line direction, you can configure the four following possibilities:
  - Only preamplification (OPT-PRE)
  - Only booster amplification (OPT-BST)
  - Both preamplification and booster amplification (where a line amplifier node has amplification in at least one direction)
  - Neither preamplification nor booster amplification
- If a west OPT-PRE card is installed:
  - The west OSC-CSM or OPT-BST COM TX is connected to the west OPT-PRE COM RX port.
  - The west OPT-PRE COM TX port is connected to the east OSC-CSM or OPT-BST COM RX port.
- If a west OPT-PRE card is not installed, the west OSC-CSM or the OPT-BST COM TX port is connected to the east OSC-CSM or OPT-BST COM RX port.
- If an east OPT-PRE card is installed:
  - The east OSC-CSM or OPT-BST COM TX port is connected to the east OPT-PRE COM RX port.
  - The east OPT-PRE COM TX port is connected to the west OSC-CSM or OPT-BST COM RX port.

- If an east OPT-PRE card is not installed, the east OSC-CSM or OPT-BST COM TX port is connected to the west OSC-CSM or OPT-BST COM RX port.

Figure 3-13 shows a sample line amplifier node with cabling.

Figure 3-13 Fibering a Line Amplifier Node

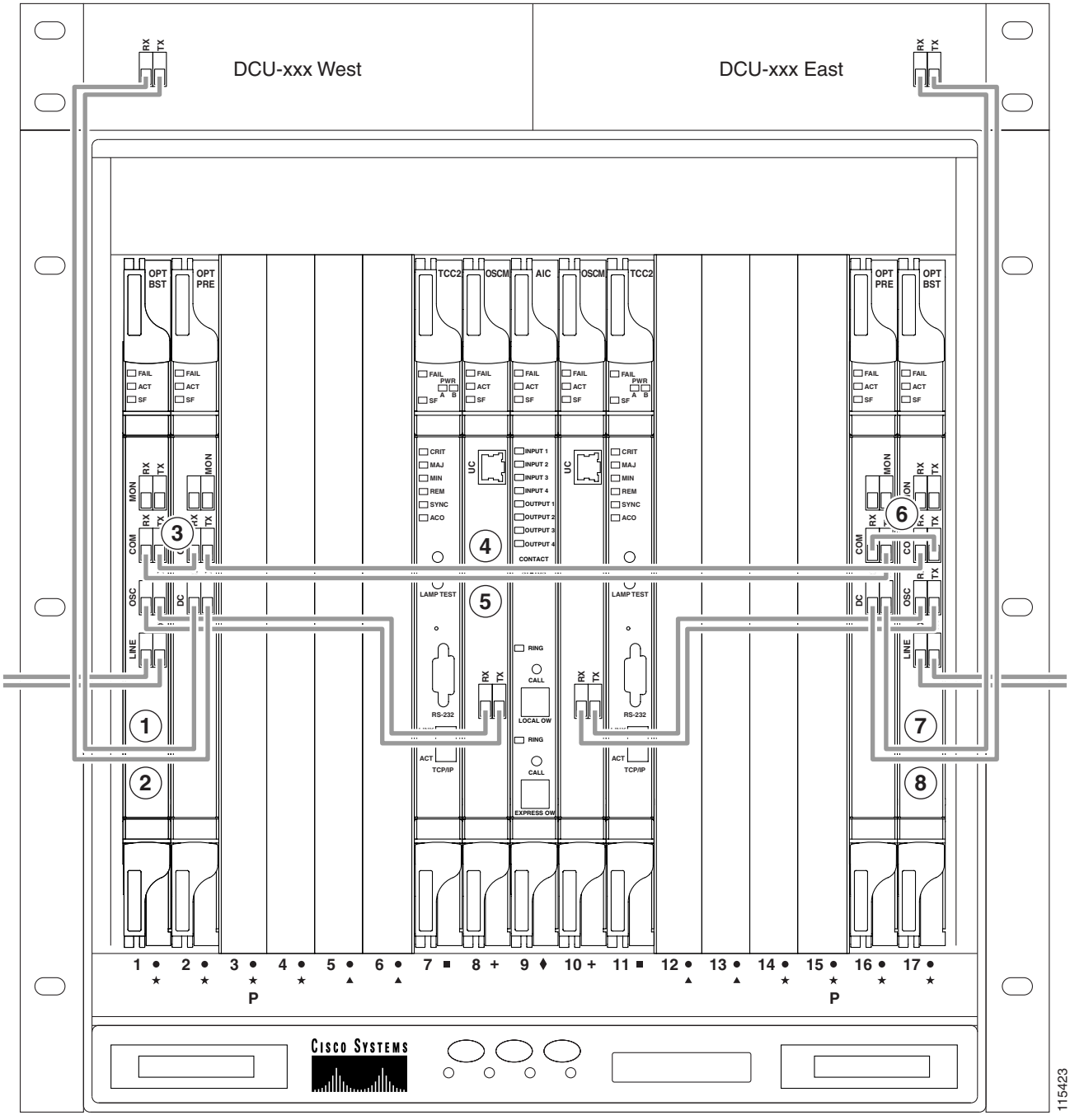

1	West DCU TX to west OPT-PRE DC RX[1]	**5**	West OPT-BST COM RX to east OPT-PRE COM TX
2	West DCU RX to west OPT-PRE DC TX[1]	**6**	West OPT-BST COM RX to east OPT-PRE COM TX
3	West OPT-BST COM TX to west OPT-PRE COM RX	**7**	East DCU TX to east OPT-PRE DC RX[1]
4	West OPT-PRE COM TX to east OPT-BST COM RX	**8**	East DCU RX to east OPT-PRE DC TX[1]

1. If a DCU is not installed, a 5 dB attenuator loop must be installed between the OPT-PRE DC ports.

Step 2 Plug one end of the fiber cable into the desired RX port and other end into the desired TX port.

Note Cards display an SF LED after the OSC terminations are created (see the "NTP-G38 Provision Terminations and Ring ID" procedure on page 3-60) and transmit and receive fibers are not connected correctly. For example, an RX port is connected to another RX port or a TX port is connected to another TX port.

Step 3 Repeat Step 2 until you have connected the nodes according to the site plan.

Step 4 **Return to your originating procedure (NTP).**

DLP-G69 Install Fiber-Optic Cables for an OSC Regeneration Node

Purpose	This task installs fiber-optic cables on a OSC regeneration node in a DWDM shelf.
Tools	Fiber-optic cables
Prerequisite Procedures	NTP-G115 Clean Fiber Connectors, page 11-32
Required/As Needed	As needed
Onsite/Remote	Onsite
Security Level	None

Step 1 Refer to the Cisco MetroPlanner internal connections table for your site when completing connections. Before you begin OSC regeneration node connections, read the following rules:

- The west OSC-CSM COM TX port connects to the east OSC-CSM COM RX port.
- The west OSC-CSM COM RX port connects to the east OSC-CSM COM TX port.
- Slots 2 through 5 and 12 through 16 can be used for TXP/MXP cards.

Figure 3-14 shows a sample OSC regeneration node with cabling.

Figure 3-14 Fibering an OSC Regeneration Node

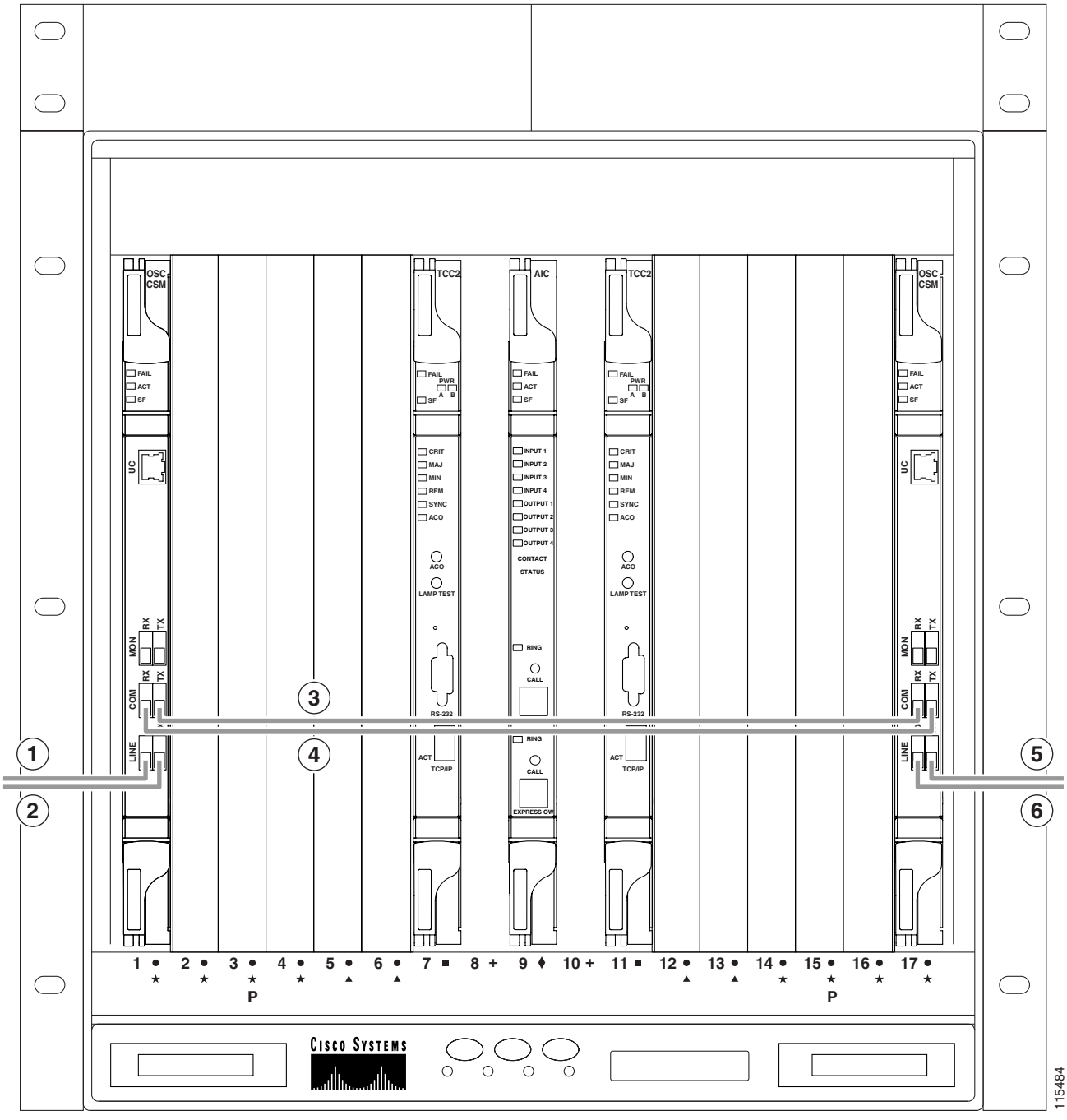

1	West OSC-CSM LINE RX to east OSC-CSM or OPT-BST LINE TX on adjacent node
2	West OSC-CSM LINE TX to east OSC-CSM or OPT-BST LINE RX on adjacent node
3	West OSC-CSM COM TX to east OSC-CSM COM RX

4	West OSC-CSM COM RX to east OSC-CSM COM TX
5	East OSC-CSM LINE RX to west OSC-CSM or OPT-BST LINE TX on adjacent node
6	East OSC-CSM LINE TX to west OSC-CSM or OPT-BST LINE RX on adjacent node

Step 2 Plug one end of the fiber cable into the desired RX port and other end into the desired TX port.

Note Cards display an SF LED after the OSC terminations are created (see the "NTP-G38 Provision Terminations and Ring ID" procedure on page 3-60) and transmit and receive fibers are not connected correctly. For example, an RX port is connected to another RX port or a TX port is connected to another TX port.

Step 3 Repeat Step 2 until you have connected the nodes according to the site plan.

Step 4 Return to your originating procedure (NTP).

DLP-G70 Install Fiber-Optic Cables for an Amplified or Passive OADM Node

Purpose	This task gives instructions, rules, and examples to install fiber-optic cables on an amplified or passive optical add/drop multiplexing (OADM) node in a DWDM shelf.
Tools	Fiber-optic cables
Prerequisite Procedures	NTP-G115 Clean Fiber Connectors, page 11-32
Required/As Needed	As needed
Onsite/Remote	Onsite
Security Level	None

Note Amplified OADM nodes contain OPT-PRE cards and/or OPT-BST cards. Passive OADM nodes do not. Both contain add/drop channel or band cards.

Step 1 Refer to the Cisco MetroPlanner internal connections table for your site when completing connections. Before you begin connecting fiber-optic cabling for amplified or passive OADM nodes, read the following rules for all OADM connections:

- The two sides of the OADM node do not need to be symmetrical. On each side, Cisco MetroPlanner can create one of the following four configurations:
  - OPT-BST and OPT-PRE
  - OSC-CSM and OPT-PRE
  - Only OSC-CSM
  - Only OPT-BST

Step 2 Consult the following rules for OADM node express path cabled connections:

- TX ports should only be connected to RX ports.

- EXP ports are connected only to COM ports in between AD-xC or AD-xB cards that all belong to the east side (that is, they are daisy-chained).
- EXP ports are connected only to COM ports in between AD-xC or AD-xB cards that all belong to the west side (that is, they are daisy-chained).
- The EXP port of the last AD-xC or AD-xB card on the west side is connected to the EXP port of the first AD-xC or AD-xB card on the east side.
- The OPT-BST COM RX port is connected to the nearest (in slot position) AD-xC or AD-xB COM TX port.
- The OPT-PRE COM TX port is connected to the nearest (in slot position) AD-xC or AD-xB COM RX port.
- If OADM cards are located in adjacent slots, the TCC2 card assumes they are connected in a daisy-chain between the EXP ports and COM ports as noted previously.
- The first west AD-xC or AD-xB card COM RX port is connected to the west OPT-PRE or OSC-CSM COM TX port.
- The first west AD-xC or AD-xB card COM TX port is connected to the west OPT-BST or OSC-CSM COM RX port.
- The first east AD-xC or AD-xB card COM RX port is connected to the east OPT-PRE or OSC-CSM COM TX port.
- The first east AD-xC or AD-xB card COM TX port is connected to the east OPT-BST or OSC-CSM RX port.
- If a west OPT-PRE is present, the west OPT-BST or OSC-CSM COM TX port is connected to the west OPT-PRE COM RX port.
- If an east OPT-PRE is present, the east OPT-BST or OSC-CSM COM TX port is connected to the east OPT-PRE COM RX port.

Step 3 Consult the following rules for OADM node add/drop path cabled connections:

- AD-xB add/drop (RX or TX) ports are only connected to the following ports:
  - 4MD COM TX or 4MD COM RX ports
  - Another AD-xB add/drop port (a pass-through configuration)
- An AD-xB add/drop band port is only connected to a 4MD card belonging to the same band.
- For each specific AD-xB, the add and drop ports for that band card are connected to the COM TX and COM RX ports of the same 4MD card.
- The AD-xB and 4MD cards are located in the same side (the connected ports will all have the same line direction).

Step 4 Consult the following rules for OADM node pass-through path cabled connections:

- Pass-through connections are only established between add and drop ports on the same band or channel and same line direction.
- Only connect AD-xC or AD-xB add/drop ports to other AD-xC or AD-xB add/drop ports (as pass-through configurations).
- An add (RX) port is only connected to a drop (TX) port.
- Only connect 4MD client input/output ports to other 4MD client input/output ports.
- A west AD-xB drop (TX) port is connected to the corresponding west 4MD COM RX port.
- A west AD-xB add (RX) port is connected to the corresponding west 4MD COM TX port.

- An east AD-xB drop (TX) port is connected to the corresponding east 4MD COM RX port.
- An east AD-xB add (RX) port is connected to the corresponding east 4MD COM TX port.

Figure 3-15 shows a sample amplified OADM node with AD-1C-xx.x cards installed.

Figure 3-15 Fibering an Amplified OADM Node

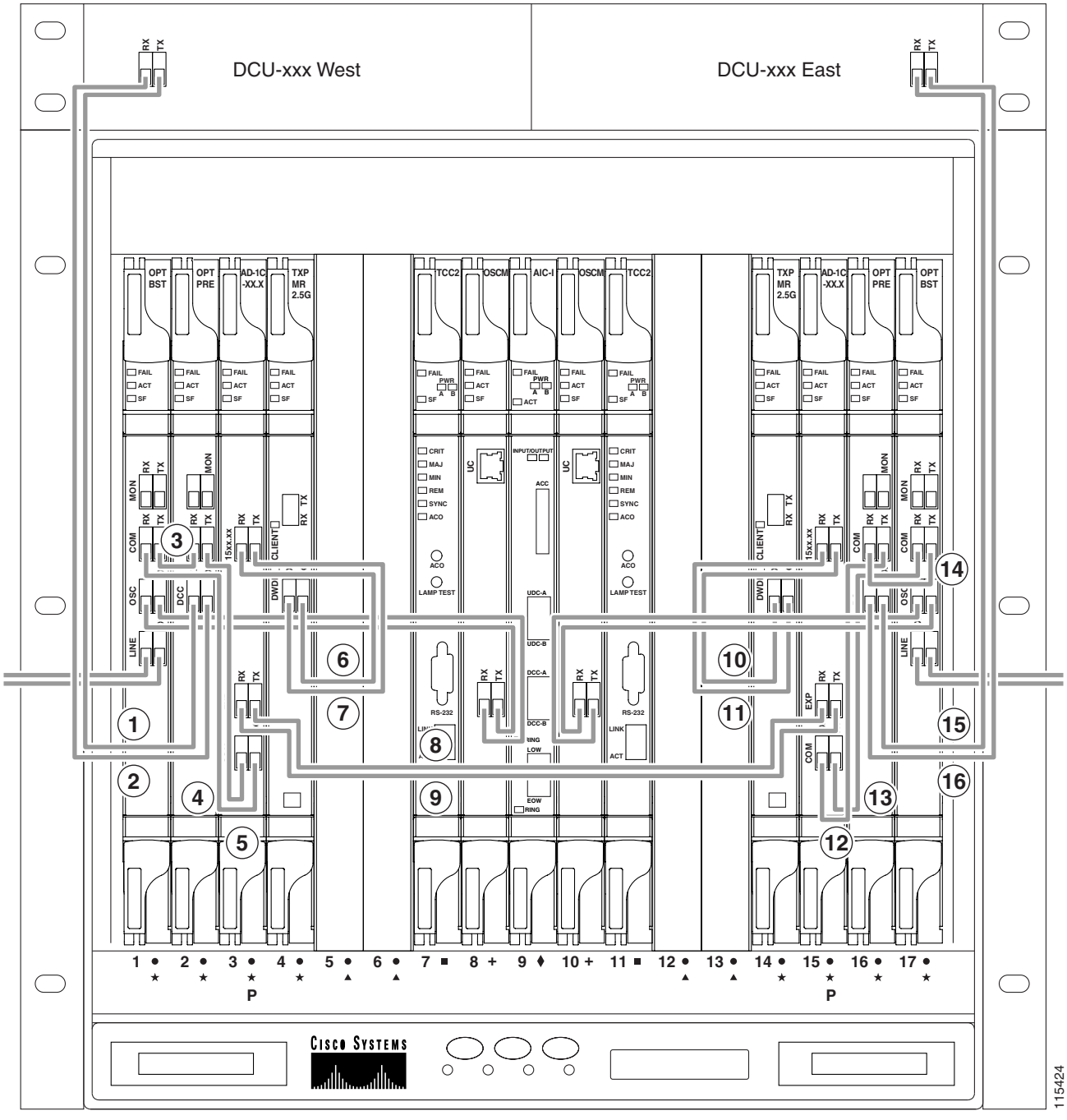

1	West DCU TX to west OPT-PRE DC RX[1]
2	West DCU RX to west OPT-PRE DC TX[1]
3	West OPT-BST COM TX to west OPT-PRE COM RX
4	West OPT-BST COM RX to west AD-1C-xx.x COM TX
5	West OPT-PRE COM TX to west AD-1C-xx.x COM RX
6	West AD-1C-xx.x (15xx.xx) RX to west TXP_MR_2.5G DWDM TX
7	West AD-1C-xx.x (15xx.xx) TX to west TXP_MR_2.5G DWDM RX
8	West AD-1C-xx.x EXP TX to east AD-1C-xx.x EXP RX
9	West AD-1C-xx.x EXP RX to east AD-1C-xx.x EXP TX
10	East TXP_MR_2.5G DWDM RX to east AD-1C-xx.x (15xx.xx) TX
11	East TXP_MR_2.5G DWDM TX to east AD-1C-xx.x (15xx.xx) RX
12	East AD-1C-xx.x COM RX to OPT-PRE COM TX
13	East AD-1C-xx.x COM TX to OPT-BST COM RX
14	East OPT-PRE COM RX to east OPT-BST COM TX
15	East DCU TX to east OPT-PRE DC RX[1]
16	East DCU RX to east OPT-PRE DC TX[1]

1. If a DCU is not installed, a 5 dB attenuator loop must be installed between the OPT-PRE DC ports.

Figure 3-16 shows an example of a passive OADM node with two AD-1C-xx.x cards installed.

Figure 3-16 Fibering a Passive OADM Node

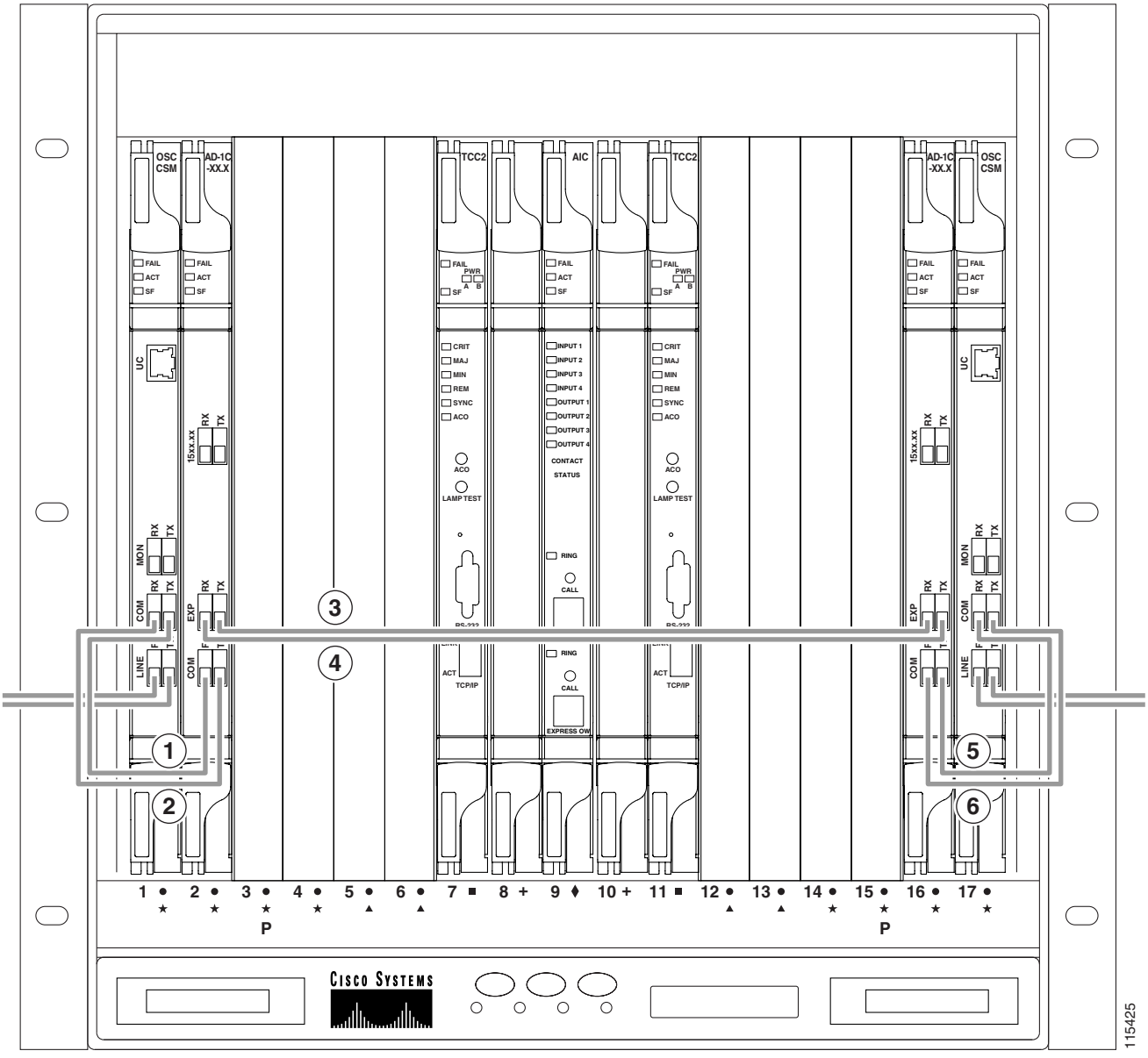

1	West OSC-CSM COM TX to west AD-1C-xx.x COM RX
2	West OSC-CSM COM RX to west AD-1C-xx.x COM TX
3	West OSC-CSM EXP TX to east AD-1C-xx.x EXP RX
4	West OSC-CSM EXP RX to east AD-1C-xx.x EXP TX
5	East AD-1C-xx.x COM TX to east OSC-CSM COM RX
6	East AD-1C-xx.x COM RX to east OSC-CSM COM TX

Step 5 Plug one end of the fiber cable into the desired RX port and other end into the desired TX port.

Note Cards display an SF LED after the OSC terminations are created (see the "NTP-G38 Provision Terminations and Ring ID" procedure on page 3-60) and transmit and receive fibers are not connected correctly. For example, an RX port is connected to another RX port or a TX port is connected to another TX port.

Step 6 Repeat Step 5 until you have connected the nodes according to the site plan.

Step 7 Return to your originating procedure (NTP).

DLP-G71 Install Fiber-Optic Cables for an ROADM Node

Purpose	This task gives instructions, rules, and examples to install fiber-optic cables on an reconfigurable optical add/drop multiplexing (ROADM) node in a DWDM shelf.
Tools	Fiber-optic cables
Prerequisite Procedures	NTP-G115 Clean Fiber Connectors, page 11-32
Required/As Needed	As needed
Onsite/Remote	Onsite
Security Level	None

Note To avoid error, connect fiber-optic cable so that the farthest slot to the right represents the east port, and the farthest slot to the left represents the west port. Fiber connected to an east port on one node must plug into the west port on an adjacent node.

Step 1 Refer to the Cisco MetroPlanner internal connections table for your site when completing connections. Before you begin connecting fiber-optic cabling for ROADM nodes, read the following rules:

- The west OPT-BST or OSC-CSM COM TX port is connected to the west OPT-PRE COM RX port.
- The west OPT-BST or OSC-CSM COM RX port is connected to the west 32WSS COM TX port.
- The west OPT-BST (if installed) OSC TX port is connected to the west OSCM RX port.
- The west OPT-BST (if installed) OSC RX port is connected to the west OSCM TX port.
- The west 32WSS EXP TX port is connected to the east 32WSS EXP RX port.
- The west 32WSS EXP RX port is connected to the east 32WSS EXP TX port.
- The west 32WSS DROP TX port is connected to the west 32DMX COM RX port.
- The east OPT-BST or OSC-CSM COM TX port is connected to the east OPT-PRE COM RX port.
- The east OPT-BST or OSC-CSM COM RX port is connected to the east 32WSS COM TX port.
- The east OPT-BST (if installed) OSC TX port is connected to the east OSCM RX port.
- The east OPT-BST (if installed) OSC RX port is connected to the east OSCM TX port.
- The east 32WSS DROP TX port is connected to the east 32DMX COM RX port.

Figure 3-17 shows a sample amplified ROADM node with cabling.

Figure 3-17 Fibering an ROADM Node

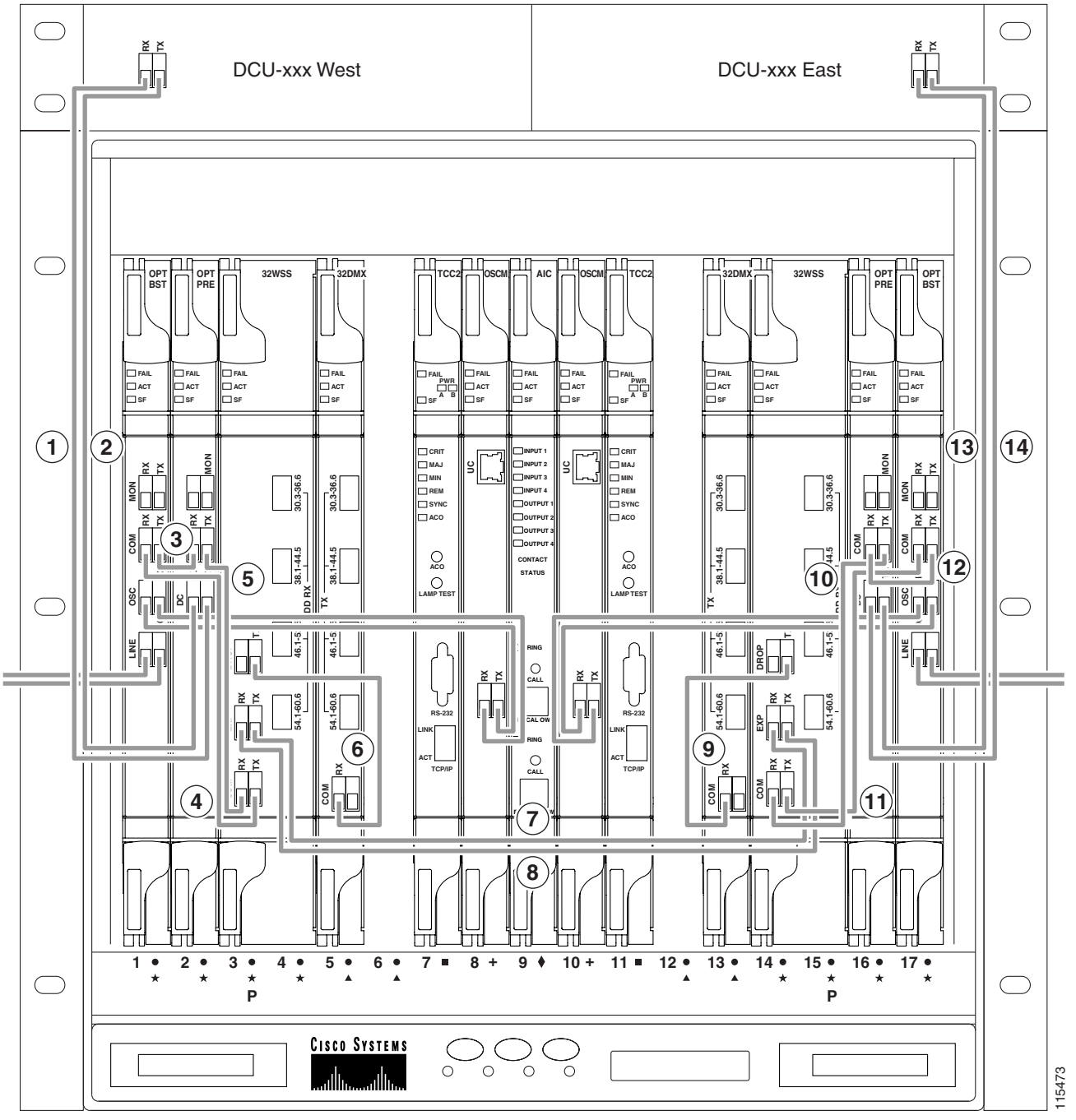

1	West DCU TX to west OPT-PRE DC RX[1]
2	West DCU RX to west OPT-PRE DC TX[1]
3	West OPT-BST COM TX to west OPT-PRE COM RX
4	West 32WSS COM TX to west OPT-BST COM RX
5	West 32WSS COM RX to west OPT-PRE COM TX

6	West 32DMX COM RX to west 32WSS DROP TX
7	West 32WSS EXP TX to east 32WSS EXP RX
8	West 32WSS EXP RX to east 32WSS EXP TX
9	East 32DMX COM RX to east 32WSS DROP TX
10	East 32WSS COM RX to east OPT-PRE COM TX
11	East 32WSS COM TX to east OPT-BST COM RX
12	East OPT-BST COM TX to east OPT-PRE COM RX
13	East DCU RX to east OPT-PRE DC TX[1]
14	East DCU TX to east OPT-PRE DC RX[1]

1. If a DCU is not installed, a 5 dB attenuator loop must be installed between the OPT-PRE DC ports.

Note Cards display an SF LED after the OSC terminations are created (see the "NTP-G38 Provision Terminations and Ring ID" procedure on page 3-60) and transmit and receive fibers are not connected correctly. For example, an RX port is connected to another RX port or a TX port is connected to another TX port.

Step 2 Plug one end of the fiber into the desired RX port and the other into the correct TX port

Step 3 Repeat Step 2 until you have connected the nodes according to the site plan.

Step 4 Return to your originating procedure (NTP).

NTP-G35 Route Fiber-Optic Cables

Purpose	This procedure describes how to route fiber-optic cables.
Tools/Equipment	None
Prerequisite Procedures	NTP-G34 Install Fiber-Optic Cables on DWDM Cards, page 3-35
Required/As Needed	As needed
Onsite/Remote	Onsite
Security Level	None

Step 1 Open the fold-down front door on the cable-management tray.

Step 2 Route the fiber cable on the card faceplate through the fiber clip on the faceplate, if provided. Fiber clips are factory-attached to the faceplates of 32MUX-O, 32DMX-O, OSCM, OPT-PRE, and OPT-BST cards.

Step 3 Route the fiber cables into the cable-management tray.

Step 4 Route the fiber cables out either side of the cable-management tray through the cutouts on each side of the shelf assembly. Use the reversible fiber guides to route cables out the desired side.

Step 5 Close the fold-down front door when all fiber cables in the front compartment are properly routed.

Stop. You have completed this procedure.

NTP-G36 Calculate Cable Connections

Purpose	This procedure verifies the cards that are installed in the shelf and calculates the connections that should be provisioned for them.
Tools/Equipment	None
Prerequisite Procedures	A DWDM network plan calculated by Cisco MetroPlanner. NTP-G22 Verify Common Card Installation, page 3-2
Required/As Needed	Required
Onsite/Remote	Onsite or remote
Security Level	Superuser

Step 1 Complete the "DLP-G46 Log into CTC" task on page 2-25 at the node where you want to provision the DWDM cable connections. If you are already logged in, continue with Step 2.

Step 2 Click the **Alarms** tab.

a. Verify that the alarm filter is not on. See the "DLP-G128 Disable Alarm Filtering" task on page 7-32 as necessary.

b. Verify that no unexplained equipment alarms appear on the node. If alarms appear, investigate and resolve them before continuing. Refer to the *Cisco ONS 15454 SONET and DWDM Troubleshooting Guide* for procedures.

Step 3 Click the **Provisioning** > **WDM-ANS** > **Connections** tabs.

Step 4 Click the **Calculate Connections** button.

CTC verifies that the cards installed in the ONS 15454 shelf are compatible and that all cards required for the DWDM node type are installed. If so, CTC calculates the fiber connections that should be provisioned. If the cards are not compatible or missing, for example, if an OPT-BST is installed but an OSCM card is not installed, the calculate connections function generates an error.

Note The connections calculation is not based on the Cisco MetroPlanner site plan. Calculations are based on the cards that are physically installed. If the site plan calls for a hub node but OADM cards are installed, CTC calculates connections based on the cards expected for an OADM node.

Step 5 If no errors were generated, continue with Step 6. If errors appear, verify that the cards installed in the shelf match the shelf plan calculated by Cisco MetroPlanner. If cards are installed incorrectly or are missing, remove the cards and install them in the correct slots following the "NTP-G30 Install the DWDM Cards" procedure on page 3-26.

Step 6 Verify that the connections in the CTC Connections tab match the connections in the Cisco MetroPlanner internal connections file. (The CTC Connections tab will not show OPT-PRE dispersion connections, span connections, or connections between TXP and MXP cards and the DWDM cards.)

Step 7 Complete the "DLP-G72 Create a DWDM Connection" task on page 3-57 for any connections that require manual provisioning. (Connections that require manual creation are indicated by a "Yes" in the Cisco MetroPlanner connections file Manually Set column.) If you need to delete a connection, complete the "DLP-G73 Delete a DWDM Connection" task on page 3-57

Step 8 Continue with the "NTP-G37 Run Automatic Node Setup" procedure on page 3-58.

Stop. **You have completed this procedure**.

DLP-G72 Create a DWDM Connection

Purpose	This task creates a DWDM connection.
Tools/Equipment	None
Prerequisite Procedures	DLP-G46 Log into CTC, page 2-25
Required/As Needed	Required
Onsite/Remote	Onsite or remote
Security Level	Superuser

Step 1 In node view, click the **Provisioning > WDM-ANS > Connections** tabs.

Step 2 Click the **Create** button.

Step 3 In the Create Optical Link dialog box, choose the From and To slots and ports from the drop-down lists.

Step 4 If the connection is unidirectional, uncheck the **bidirectional** check box.

Step 5 Click **OK**. The new connection appears in the Connections table, but its State is "Uncommitted."

Step 6 If you need to create additional connections, repeat Steps 2 through 5 for each new connection.

Step 7 Click the new connection in the table. Click the **Commit** button. The connection state changes to "Connected."

Step 8 Return to your originating procedure (NTP).

DLP-G73 Delete a DWDM Connection

Purpose	This task deletes a DWDM connection.
Tools/Equipment	None
Prerequisite Procedures	DLP-G46 Log into CTC, page 2-25
Required/As Needed	Required
Onsite/Remote	Onsite or remote
Security Level	Superuser

Step 1 In node view, click the **Provisioning > WDM-ANS > Connection** tabs.

Step 2 Click the connection you want to delete.

Step 3 Click **Delete**.

Step 4 Return to your originating procedure (NTP).

NTP-G37 Run Automatic Node Setup

Purpose	This procedure runs the CTC DWDM automatic node setup (ANS) function. ANS updates the values of the variable optical attenuators (VOAs) to equalize the per-channel power at the amplifier level.
Tools/Equipment	None
Prerequisite Procedures	An Installation Parameters file for the node exported from Cisco MetroPlanner. NTP-G36 Calculate Cable Connections, page 3-56
Required/As Needed	Required
Onsite/Remote	Onsite or remote
Security Level	Superuser

Step 1 Complete the "DLP-G46 Log into CTC" task on page 2-25 at the node where you want to run automatic node setup. If you are already logged in, continue with Step 2.

Step 2 Click the **Alarms** tab.

a. Verify that the alarm filter is not on. See the "DLP-G128 Disable Alarm Filtering" task on page 7-32 as necessary.

b. Verify that no unexplained alarms appear on the network. If alarms appear, investigate and resolve them before continuing. Refer to the *Cisco ONS 15454 SONET and DWDM Troubleshooting Guide* for procedures.

Step 3 Complete the "DLP-G74 Import a Cisco MetroPlanner Configuration File" task on page 3-59.

Step 4 Click the **Port Status** tab. Click **Launch ANS**.

Step 5 In the Apply Launch ANS dialog box, click **Yes**. ANS adjusts the values of the VOAs to equalize the per-channel power at the amplifier level.

Step 6 In the Launch ANS confirmation dialog box, click **OK**.

Step 7 Verify that one of the following statuses appears in the Link Status column for all ports. If so, continue with Step 8.

- Success - Changed—The parameter setpoint was recalculated successfully.
- Success - Unchanged—The parameter setpoint did not need recalculation.
- Not Applicable—The parameter setpoint does not apply to this node type.

If one of the following statuses is shown, complete the provided instructions:

- Fail - Out of Range—The calculated setpoint is outside the expected range. Repeat the "NTP-G36 Calculate Cable Connections" procedure on page 3-56 to verify that all connections have been provisioned correctly, paying attention to connections that require manual provisioning.

- Fail - Port in IS State—The parameter could not be calculated because the port is in-service. This status should normally not appear at this point in node turnup. If it does, display the card in card view, change the port admin state to OOS,DSLB (ANSI)/Locked,disabled (ETSI) and repeat Steps 4 through 7.

Note After your network is completed before you create circuits, launch ANS again at each network node to ensure all ports are regulated according to the network values. Individual node values may change during installation

Step 8 Continue with the "NTP-G39 Verify OSCM and OSC-CSM Transmit Power" procedure on page 3-63.

Stop. **You have completed this procedure**.

DLP-G74 Import a Cisco MetroPlanner Configuration File

Purpose	This task imports a Cisco MetroPlanner configuration file into a node to configure the node automatically.
Tools/Equipment	None
Prerequisite Procedures	A Cisco MetroPlanner network configuration file must be available on a local or network drive. DLP-G46 Log into CTC, page 2-25
Required/As Needed	Required
Onsite/Remote	Onsite or remote
Security Level	Superuser

Caution Importing the correct Cisco MetroPlanner configuration file is very important. Verify that have the correct MetroPlanner configuration file for your node before you begin this task.

Step 1 Export the Installation Parameters for your node from Cisco MetroPlanner. Refer to the *Cisco MetroPlanner DWDM Operations Guide* for procedures. If the parameters file has been exported, continue with Step 2.

a. In Cisco MetroPlanner, select **Network > Install > Assisted Conf Setup**.

b. In the dialog box, choose a location to save the Cisco MetroPlanner installation file.

Step 2 In CTC node view, click the **Provisioning > WDM-ANS > Provisioning** tabs.

Step 3 Click **Import**. The Import NE Update From File dialog box opens.

Step 4 Enter the path to the configuration file, or click **Browse** and navigate to the configuration file using the Open dialog box.

Step 5 Click **OK**. The Import NE Update From File dialog box closes.

The MetroPlanner configuration settings are imported and a pencil icon appears next to each parameter that will change.

Step 6 Verify that the imported parameters are correct according to the printout of the MetroPlanner parameters file, then click **Apply**.

Step 7 Return to your originating procedure (NTP).

NTP-G38 Provision Terminations and Ring ID

Purpose	This procedure provisions the OSC/GCC terminations and the DWDM ring ID.
Tools/Equipment	None
Prerequisite Procedures	An Installation Parameters file for the node exported from Cisco MetroPlanner. NTP-G36 Calculate Cable Connections, page 3-56
Required/As Needed	Required
Onsite/Remote	Onsite or remote
Security Level	Superuser

Step 1 Complete the "DLP-G46 Log into CTC" task on page 2-25 at the node where you want to provision the DWDM cable connections. If you are already logged in, continue with Step 2.

Step 2 Click the **Alarms** tab.

a. Verify that the alarm filter is not on. See the "DLP-G128 Disable Alarm Filtering" task on page 7-32 as necessary.

b. Verify that no unexplained alarms appear. If alarms appear, investigate and resolve them before continuing. Refer to the *Cisco ONS 15454 SONET and DWDM Troubleshooting Guide* for procedures.

Step 3 Complete the "DLP-G75 Create OSC Terminations" task on page 3-61.

Step 4 If you are using TXP or MXP cards, complete the "DLP-G76 Provision GCC Terminations" task on page 3-62

Step 5 As needed, complete the "DLP-G77 Provision the Ring ID" task on page 3-63.

Step 6 Continue with the "NTP-G39 Verify OSCM and OSC-CSM Transmit Power" procedure on page 3-63.

Stop. **You have completed this procedure**.

DLP-G75 Create OSC Terminations

Purpose	This task creates the terminations required by OSC channels between network nodes.
Tools/Equipment	None
Prerequisite Procedures	NTP-G36 Calculate Cable Connections, page 3-56 DLP-G46 Log into CTC, page 2-25
Required/As Needed	As needed
Onsite/Remote	Onsite or remote
Security Level	Provisioning or higher

Step 1 In node view, click the **Provisioning > Comm Channels > OSC** tabs.

Step 2 In the OSC Terminations pane, click **Create** (Figure 3-18).

Figure 3-18 OSC Terminations Pane

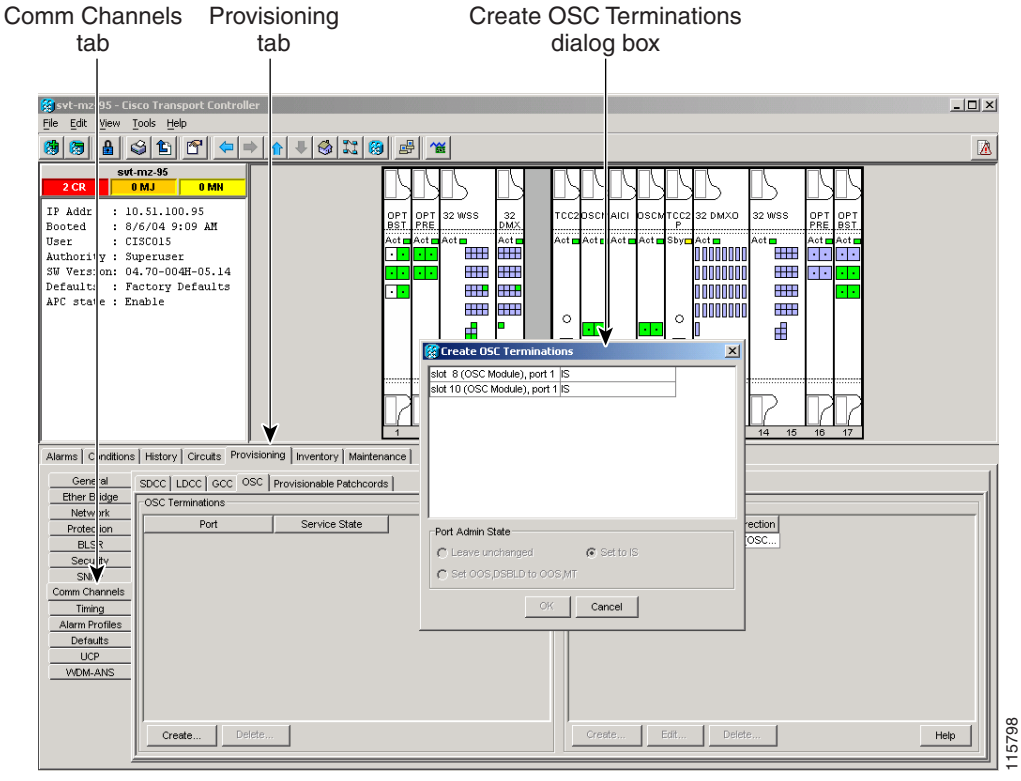

Step 3 In the Create OSC Terminations dialog box, choose the ports where you want to create the OSC termination. To select more than one port, press the **Shift** key (to select a range of ports) or the **Ctrl** key (to select multiple individual ports).

Note OSC on the DWDM node uses a separate OC3/STM1 channel to transport the section data communications channel (SDCC), which is used for ONS 15454 DCC terminations.

Step 4 Click **OK**. Ports are automatically placed in service. Until all network OSC connections between nodes are created and the ports are in service, the following alarms might appear:

- LOS-P (OSC termination failure)
- Power failure alarms on the OPT-BST and/or OSC-CSM

Note After the OSC termination is created, the line ports are placed in service and span power levels are checked. If power levels are low and/or the spans are not connected correctly, the OSC termination alarms appear.

Step 5 Return to your originating procedure (NTP).

DLP-G76 Provision GCC Terminations

Purpose	This task creates the DWDM GCC terminations required for network setup when using the TXP_MR_10G, TXP_MR_2.5G, TXPP_MR_2.5G, and MXP_2.5G_10G cards. Perform this task before you create circuits for these cards. In this task, you can also set up the node so that it has direct IP access to a far-end non-ONS node over the GCC network.
Tools/Equipment	None
Prerequisite Procedures	DLP-G46 Log into CTC, page 2-25
Required/As Needed	As needed
Onsite/Remote	Onsite or remote
Security Level	Provisioning or higher

Step 1 In node view click the **Provisioning > Comm Channels > GCC** tabs.

Step 2 In the GCC Terminations pane, click **Create**.

Step 3 In the Create optical transport network (OTN) GCC Terminations dialog box, click the ports where you want to create the GCC termination. To select more than one port, press the **Shift** key or the **Ctrl** key.

Note GCC refers to the general communications channel, which is used for ONS 15454 transponders and muxponders in DWDM applications.

Step 4 (Optional) From the GCC Rate drop-down list, choose from two options:

- 192k is the line rate of Section DCC (SDCC)—This is the default option in Software R4.6.
- 576k is the line rate of Line DCC (LDCC)—This option will be supported in a future software release.

Step 5 Click **Set to IS** if you want to put ports in service.

Step 6 If the SDCC termination is to include a non-ONS node, check the **Far End is Foreign** check box. This automatically sets the far-end node IP address to 0.0.0.0, which means that any address can be specified by the far end. To change the default to a specific the IP address, see the "DLP-G184 Change a GCC Termination" task on page 9-28.

Step 7 Click **OK**. Until all network GCC terminations are created and the ports are in service, GCC-EOC alarms appear.

Step 8 Return to your originating procedure (NTP).

DLP-G77 Provision the Ring ID

Purpose	This task creates a DWDM ring ID.
Tools/Equipment	None
Prerequisite Procedures	DLP-G46 Log into CTC, page 2-25
Required/As Needed	As needed
Onsite/Remote	Onsite or remote
Security Level	Provisioning or higher

Step 1 In node view, click the **Provisioning > Comm Channels > OSC** tabs.

Step 2 Click the **OSC** tab.

Step 3 In the DWDM Ring ID area, click **Create**.

Step 4 In the DWDM Ring ID dialog box, enter the following information:

- Ring ID—Enter the same ID for all nodes on the ring. Choose a number from 1 to 255.
- West Line—Select a card from the drop-down list. Selectable cards are OSCM or OSC-CSM. Slots 1 through 8 represent the west side of the node.
- East Line—Select a card from the drop-down list. Selectable cards are OSCM or OSC-CSM. Slots 10 through 17 represent the east side of the node.

Step 5 Click **OK**.

Step 6 Return to your originating procedure (NTP).

NTP-G39 Verify OSCM and OSC-CSM Transmit Power

Purpose	This procedure verifies the transmit power of the ONS 15454 Optical Service Channel Module (OSCM) and the Optical Service Channel + Combiner Separator Module (OSC-CSM).
Tools/Equipment	None
Prerequisite Procedures	NTP-G37 Run Automatic Node Setup, page 3-58
Required/As Needed	Required
Onsite/Remote	Onsite or remote
Security Level	Superuser

Step 1 Complete the "DLP-G46 Log into CTC" task on page 2-25 at the node where you want to provision the DWDM cable connections. If you are already logged in, continue with Step 2.

Step 2 In the node view shelf graphic, double-click the OSCM or OSC-CSM card.

Step 3 Click the **Maintenance** tab.

Step 4 From the ALS Mode drop-down list, choose **Manual Start for Test**. Click **Apply**.

Step 5 Click the **Provisioning > Optical Line** tabs.

Step 6 For the TX (transmit) port entry, verify that the Power value is one of the following:

- If the OSC-CSM is connected to the span and OPT-BST cards are not installed, Power should be the Poutad value or –6.5, whichever is less.
- If OSCM and OPT-BST cards are installed: –5 dBm if the OPT-PRE is set to Control Gain and the OPT-PRE is not provisioned or equipped; or –0.5 dBm (the maximum value) if it is set to Control Power. (Evaluate the power of the OPT-PRE that is installed on the same side as the OSCM card.)
- If OSC-CSM and OPT-BST cards are installed and the OPT-PRE is not provisioned or equipped: –5 dBm if the OPT-PRE is set to Control Gain, or –1.5 dBm (the maximum value) if it is set to Control Power. (Evaluate the power of the OPT-PRE that is installed on the same side as the OSC-CSM.)

Step 7 If the OSCM or OSC-CSM power levels are not within the ranges specified in Step 6, complete the following steps. Otherwise, continue with Step 8.

a. Click the **Maintenance > ALS** tabs. Verify that the ALS Command is set to OSRI off.

b. In the ALS Command area, choose **Manual Restart** and click **Apply**.

c. Clean the optical connections. See the "NTP-G115 Clean Fiber Connectors" procedure on page 11-32.

d. Verify the optical connections inside the unit.

e. Relaunch ANS.

Step 8 Continue with the node acceptance test procedures in Chapter 4, "Perform Node Acceptance Tests".

Stop. **You have completed this procedure**.

NTP-G40 Replace the Front Door

Purpose	This procedure replaces the front door and door ground strap after installing cards and fiber-optic cables.
Tools/Equipment	#2 Phillips screwdriver Medium slot-head screwdriver Small slot-head screwdriver
Prerequisite Procedures	NTP-G3 Open and Remove the Front Door, page 1-20
Required/As Needed	Required
Onsite/Remote	Onsite
Security Level	None

Note Be careful not to crimp any fiber cables that are connected to the MXP/TXP cards or DWDM cards. Some might not have the fiber boot attached.

Step 1 Insert the front door into the hinges on the shelf assembly.

Step 2 Attach one end of the ground strap terminal lug (72-3622-01) to the male stud on the inside of the door. Attach and tighten the #6 Kepnut (49-0600-01) using the open-end wrench (Figure 3-19).

Figure 3-19 Installing the Door Ground Strap Retrofit Kit

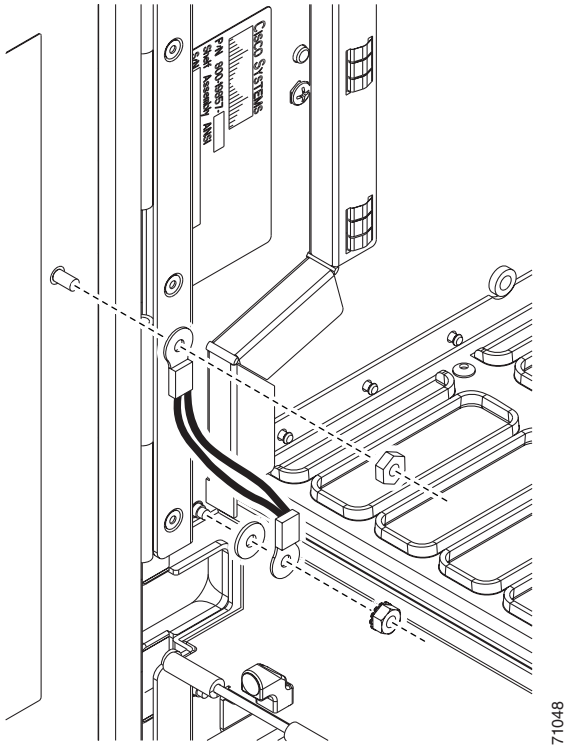

Step 3 Attach the other end of the ground strap to the longer screw on the fiber guide.

a. Attach the lock washer.

b. Attach the terminal lug.

c. Using the open-end wrench, attach and tighten the #4 Kepnut (49-0337-01) on the terminal lug.

Note To avoid interference with the traffic (line) card, make sure the ground strap is in a flat position when the door is open. To move the ground strap into a flat position, rotate the terminal lug counterclockwise before tightening the Kepnut.

Step 4 Replace the left cable-routing channel.

Step 5 Using a Phillips screwdriver, insert and tighten the screws for the cable-routing channel.

Figure 3-20 shows the shelf assembly with the front door and ground strap installed.

Figure 3-20 Shelf Assembly with Door Ground Strap Retrofit Kit Installed

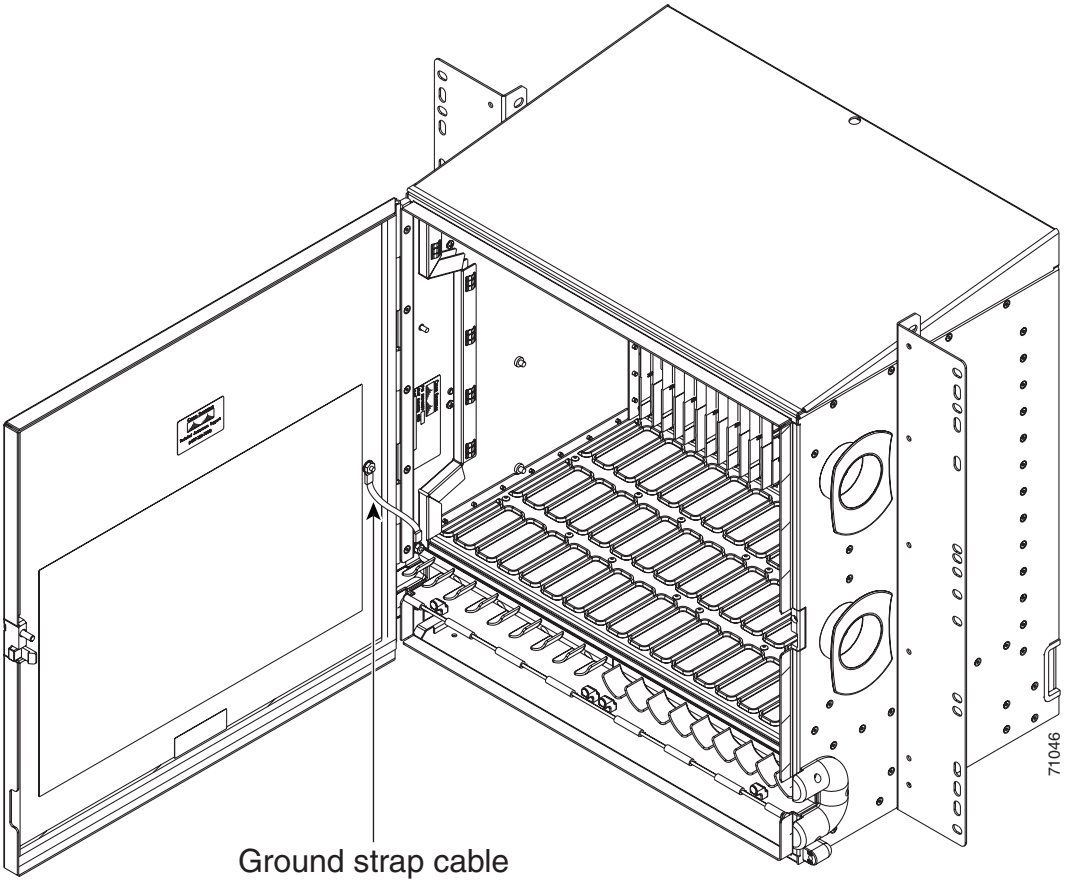

Step 6 Swing the door closed.

Note The ONS 15454 comes with a pinned hex key tool for locking and unlocking the front door. Turn the key counterclockwise to unlock the door and clockwise to lock it.

Stop. You have completed this procedure.

Perform Node Acceptance Tests

This chapter provides acceptance test procedures for ONS 15454 dense wavelength division multiplexing (DWDM) nodes.

Note Unless otherwise specified, "ONS 15454" refers to both ANSI and ETSI shelf assemblies.

Before You Begin

Before you begin the procedures in this chapter, complete the procedures applicable to your site plan from the following chapters:

- Chapter 1, "Install the Shelf and Common Control Cards"
- Chapter 2, "Connect the PC and Log into the GUI"
- Chapter 3, "Turn Up a Node"

This section lists the procedures (NTPs) that you need to complete to turn up a DWDM node. Turn to a procedure for applicable tasks (DLPs).

1. NTP-G41 Perform the Terminal and Hub Node with 32MUX-O and 32DMX-O Cards Acceptance Test, page 4-2—Complete this procedure to test terminal and hub nodes with 32MUX-O and 32DMX-O cards installed.
2. NTP-G42 Perform the Terminal Node with 32WSS and 32DMX Cards Acceptance Test, page 4-4—Complete this procedure to test terminal nodes with 32WSS and 32DMX cards installed.
3. NTP-G43 Perform the ROADM Node Acceptance Test, page 4-6—Complete this procedure to test ROADM nodes.
4. NTP-G44 Perform the Anti-ASE Hub Node Acceptance Test, page 4-8—Complete this procedure to test anti-ASE hub nodes.
5. NTP-G45 Perform the Symmetric Line Node with OSCM Cards Acceptance Test, page 4-10—Complete this procedure to test symmetric line nodes with OSCM cards.
6. NTP-G46 Perform the Symmetric Line Node with OSC-CSM Cards Acceptance Test, page 4-12—Complete this procedure to test symmetric line nodes with OSC-CSM cards.
7. NTP-G47 Perform the Asymmetric Line Node with OSC-CSM and OSCM Cards Acceptance Test, page 4-13—Complete this procedure to test asymmetric line nodes with OSCM and OSC-CSM cards.

8. NTP-G48 Perform the Symmetric OADM Node with OSCM Cards Acceptance Test, page 4-16—Complete this procedure to test symmetric OADM nodes with OSCM cards.
9. NTP-G49 Perform the Symmetric OADM Node with OSC-CSM Cards Acceptance Test, page 4-18—Complete this procedure to test symmetric OADM nodes with OSC-CSM cards.
10. NTP-G50 Perform the Symmetric Passive OADM Node with OSC-CSM Cards Acceptance Test, page 4-20—Complete this procedure to test symmetric passive OADM nodes with OSC-CSM cards.

NTP-G41 Perform the Terminal and Hub Node with 32MUX-O and 32DMX-O Cards Acceptance Test

Purpose	This procedure tests a DWDM terminal or hub node with 32MUX-O and 32DMX-O cards.
Tools/Equipment	• A tunable laser • An optical power meter or optical spectrum analyzer • 2 bulk attenuators (10 dB) LC
Prerequisite Procedures	Chapter 3, "Turn Up a Node."
Required/As Needed	Required
Onsite/Remote	Onsite
Security Level	Superuser

Note This procedure tests the west side of hub nodes first, then the east side. If you are testing a terminal node, apply instructions for the west side of the hub node to the terminal side (east or west) of the terminal node.

Step 1 Complete the "DLP-G46 Log into CTC" task on page 2-25 at the hub or terminal node that you want to test. If you are already logged in, continue with Step 2.

Step 2 From the View menu, choose **Go to Network View**.

Step 3 Click the **Alarms** tab.

a. Verify that the alarm filter is not on. See the "DLP-G128 Disable Alarm Filtering" task on page 7-32 as necessary.

b. Verify that no unexplained alarms appear on the network. If alarms appear, investigate and resolve them before continuing. Refer to the *Cisco ONS 15454 SONET and DWDM Troubleshooting Guide* for procedures.

Note If OSC terminations are created, there will be two alarms, one for low power on the Optical Booster (OPT-BST) card, and the other an OSC channel alarm.

Step 4 In node view, click the **Provisioning** > **WDS-ANS** > **Port Status** tabs. Verify that all statuses under Link Status are listed as Success - Changed, Success - Unchanged, or Not Applicable. If any are not, complete the "NTP-G37 Run Automatic Node Setup" procedure on page 3-58.

Step 5 Verify that the OSC link becomes active on the west Optical Service Channel Module (OSCM) or Optical Service Channel and Combiner/Separator Module (OSC-CSM). (The OSC Termination must already be provisioned. If not, complete the "DLP-G75 Create OSC Terminations" task on page 3-61.)

Step 6 Create a physical loopback on the west or terminal OPT-BST amplifier by using a patch cord with 10-dB bulk attenuators to connect the LINE TX port to the LINE RX port.

Note The OPT-BST low power alarm should go away; the OSC channel alarm will remain.

Step 7 Tune the tunable laser to the first wavelength (1530.33 nm) of the 100-GHz ITU-T grid and connect it to the CHAN RX 01 port on the west (or terminal) 32-Channel Multiplexer (32MUX-O) card using the available patch panel.

Step 8 Display the west (or terminal) 32MUX-O card in card view.

Step 9 Click the **Provisioning** > **Optical Chn** > **Parameters** tabs.

Step 10 Change the Port 1 Admin State to **OOS,MT** (ANSI) or **Locked,maintenance** (ETSI).

Step 11 Verify that the Port 1 power level reaches the provisioned VOA Power Ref setpoint.

Note The tunable laser minimum output optical power (Pout) must be 6 dBm. If the output power is lower than the specified value, the 32MUX-O card might not reach the provisioned setpoint.

Step 12 If an OPT-BST card is installed, complete the "DLP-G79 Verify the OPT-BST Amplifier Laser and Power" task on page 4-22 on the west (or terminal side) OPT-BST to ensure that the amplifier is working properly.

Step 13 Complete the "DLP-G80 Verify the OPT-PRE Amplifier Laser and Power" task on page 4-23 on the west (or terminal) OPT-PRE to ensure that the amplifier is working properly.

Step 14 Complete the "DLP-G81 Verify the 32DMX-O or 32DMX Power" task on page 4-24 on the west (or terminal) 32DMX-O to ensure that the card is powered correctly.

Step 15 Restore the default IS,AINS (ANSI) or Unlocked,automaticInService (ETSI) admin state to the 32MUX-O port that was changed to OOS,MT/Locked,maintenance in Step 10.

Step 16 Repeat Steps 7 through 15 for the remaining 32 wavelengths of the 100-Ghz grid to verify the correct behavior of all variable optical attenuators (VOAs) inside the 32MUX-O card.

Step 17 Remove the loopback created in Step 6.

Step 18 If the node is a hub node, repeat Steps 6 through 17 for the east side cards. If the node is a terminal node, continue with Step 19.

Step 19 Complete the "NTP-G37 Run Automatic Node Setup" procedure on page 3-58 to restore the original configuration.

Step 20 Click the **Alarms** tab.

a. Verify that the alarm filter is not on. See the "DLP-G128 Disable Alarm Filtering" task on page 7-32 as necessary.

b. Verify that no unexplained alarms appear on the network. If alarms appear, investigate and resolve them before continuing. Refer to the *Cisco ONS 15454 SONET and DWDM Troubleshooting Guide* for procedures.

Stop. **You have completed this procedure**.

NTP-G42 Perform the Terminal Node with 32WSS and 32DMX Cards Acceptance Test

Purpose	This procedure tests a DWDM terminal node with 32WSS and 32DMX cards installed.
Tools/Equipment	• A tunable laser • An optical power meter or optical spectrum analyzer • 2 bulk attenuators (10 dB) LC
Prerequisite Procedures	Chapter 3, "Turn Up a Node."
Required/As Needed	Required
Onsite/Remote	Onsite
Security Level	Superuser

Step 1 Complete the "DLP-G46 Log into CTC" task on page 2-25 at the hub or terminal node that you want to test. If you are already logged in, continue with Step 2.

Step 2 From the View menu, choose **Go to Network View**.

Step 3 Click the **Alarms** tab.

a. Verify that the alarm filter is not on. See the "DLP-G128 Disable Alarm Filtering" task on page 7-32 as necessary.

b. Verify that no unexplained alarms appear on the network. If alarms appear, investigate and resolve them before continuing. Refer to the *Cisco ONS 15454 SONET and DWDM Troubleshooting Guide* for procedures.

Note If OSC terminations are created, there will be two alarms, one for low power on the Optical Booster (OPT-BST) card, and the other an OSC channel alarm.

Step 4 In node view, click the **Provisioning** > **WDS-ANS** > **Port Status** tabs. Verify that all statuses under Link Status are listed as Success - Changed, Success - Unchanged, or Not Applicable. If any are not, complete the "NTP-G37 Run Automatic Node Setup" procedure on page 3-58.

Step 5 Verify that the OSC link becomes active on the west Optical Service Channel Module (OSCM) or Optical Service Channel and Combiner/Separator Module (OSC-CSM). (The OSC Termination must already be provisioned. If not, complete the "DLP-G75 Create OSC Terminations" task on page 3-61.)

Step 6 Create a physical loopback on the OPT-BST amplifier by using a patch cord with 10-dB bulk attenuators to connect the LINE TX port to the LINE RX port.

Note The OPT-BST low power alarm should go away; the OSC channel alarm will remain.

Step 7 Tune the tunable laser to the first wavelength (1530.33 nm) of the 100-GHz ITU-T grid and connect it to the CHAN RX 01 port on the 32-Channel Wavelength Selective Switch (32WSS) card using the available patch panel.

Step 8 Display the 32WSS card in card view.

Step 9 Click the **Provisioning** > **Optical Chn** > **Parameters** tabs.

Step 10 Change the Port 1 Admin State to **OOS,MT** (ANSI) or **Locked,maintenance** (ETSI).

Step 11 Change the Port 33 Admin State to **OOS,MT** (ANSI) or **Locked,maintenance** (ETSI).

Step 12 Click the **Maintenance** tab.

Step 13 For Channel #1, change Operating Mode to **Add Drop**.

Step 14 Click the **Provisioning** > **Optical Chn** > **Parameters** tabs.

Step 15 Verify that the Port 1 power level reaches the provisioned VOA Power Ref setpoint.

Step 16 Display the OPT-BST card (if present) in card view.

Step 17 Click the **Provisioning** > **Optical Chn** > **Parameters** tabs.

Step 18 Change the Port 1 Admin State to **OOS,MT** (ANSI) or **Locked,maintenance** (ETSI).

Step 19 Display the OPT-PRE card in card view.

Step 20 Click the **Provisioning** > **Optical Chn** > **Parameters** tabs.

Step 21 Change the Port 1 Admin State to **OOS,MT** (ANSI) or **Locked,maintenance** (ETSI).

Step 22 Display the 32-DMX in card view.

Step 23 Click the **Provisioning** > **Optical Chn** > **Parameters** tabs.

Step 24 Change the Port 33 Admin State to **OOS,MT** (ANSI) or **Locked,maintenance** (ETSI).

Note The tunable laser minimum output optical power (Pout) must be 6 dBm. If the output power is lower than the specified value, the 32MUX-O card might not reach the provisioned setpoint.

Step 25 If an OPT-BST card is installed, complete the "DLP-G79 Verify the OPT-BST Amplifier Laser and Power" task on page 4-22 on the OPT-BST to ensure that the amplifier is working properly.

Step 26 Complete the "DLP-G80 Verify the OPT-PRE Amplifier Laser and Power" task on page 4-23 on the OPT-PRE to ensure that the amplifier is working properly.

Step 27 Complete the "DLP-G81 Verify the 32DMX-O or 32DMX Power" task on page 4-24 on the 32DMX to ensure that the card is powered correctly.

Step 28 Restore the default admin states to the 32WSS, OPT-BST, OPT-PRE, and 32DMX ports that were changed to OOS,MT/Locked,maintenance in Steps 10, 11, 18, 21, and 24.

Step 29 Repeat Steps 7 through 28 for the remaining 32 wavelengths of the 100-Ghz grid to verify the correct behavior of all variable optical attenuators (VOAs) inside the 32WSS and 32DMX cards.

Step 30 Remove the loopback created in Step 6.

Step 31 Complete the "NTP-G37 Run Automatic Node Setup" procedure on page 3-58 to restore the original configuration.

Step 32 Click the **Alarms** tab.

a. Verify that the alarm filter is not on. See the "DLP-G128 Disable Alarm Filtering" task on page 7-32 as necessary.

b. Verify that no unexplained alarms appear on the network. If alarms appear, investigate and resolve them before continuing. Refer to the *Cisco ONS 15454 SONET and DWDM Troubleshooting Guide* for procedures.

Stop. **You have completed this procedure**.

NTP-G43 Perform the ROADM Node Acceptance Test

Purpose	This procedure tests a ROADM node.
Tools/Equipment	• A tunable laser • An optical power meter or optical spectrum analyzer • 2 bulk attenuators (10 dB) LC
Prerequisite Procedures	Chapter 3, "Turn Up a Node."
Required/As Needed	Required
Onsite/Remote	Onsite
Security Level	Superuser

Step 1 Complete the "DLP-G46 Log into CTC" task on page 2-25 at the hub or terminal node that you want to test. If you are already logged in, continue with Step 2.

Step 2 From the View menu, choose **Go to Network View**.

Step 3 Click the **Alarms** tab.

a. Verify that the alarm filter is not on. See the "DLP-G128 Disable Alarm Filtering" task on page 7-32 as necessary.

b. Verify that no unexplained alarms appear on the network. If alarms appear, investigate and resolve them before continuing. Refer to the *Cisco ONS 15454 SONET and DWDM Troubleshooting Guide* for procedures.

Note If OSC terminations are created, there will be two alarms, one for low power on the Optical Booster (OPT-BST) card, and the other an OSC channel alarm.

Step 4 In node view, click the **Provisioning** > **WDS-ANS** > **Port Status** tabs. Verify that all statuses under Link Status are listed as Success - Changed, Success - Unchanged, or Not Applicable. If any are not, complete the "NTP-G37 Run Automatic Node Setup" procedure on page 3-58.

Step 5 From your Cisco MetroPlanner site configuration file, identify the dropped and added channels that are configured in pass-through mode in both directions. Mark these channels and skip the related optical test for the add and drop section involved. The channel pass-through connections are verified separately.

Note Configuring a channel pass-through mode means the channel is passes through the 32WSS card from the COM port to the EXP port. The channel is not terminated inside the node.

Step 6 Create a physical loopback on the west OPT-BST amplifier by connecting a patch cord the LINE TX port to the LINE RX port with 10-dB bulk attenuator.

Step 7 Verify that the OSC link becomes active on the west Optical Service Channel Module (OSCM) or Optical Service Channel and Combiner/Separator Module (OSC-CSM). (The OSC Termination must already be provisioned. If not, complete the "DLP-G75 Create OSC Terminations" task on page 3-61.)

Step 8 For pass-through channels, continue with Step 9. If you do not have pass-through channels, continue with Step 34.

Step 9 Verify the first channel connection configured in pass-through mode in both directions:

- **a.** Set the tunable laser output power to a nominal values, such as –3 dBm, and tune it to the corresponding wavelength on the 100 GHz ITU-T grid.
- **b.** Connect the tunable laser to the LINE RX port of the east OPT-BST using a 10 dB attenuator.

Step 10 Display the west 32WSS card in card view.

Step 11 Click the **Provisioning** > **Optical Chn** > **Parameters** tabs.

Step 12 Change the Port 1 Admin State to **OOS,MT** (ANSI) or **Locked,maintenance** (ETSI).

Step 13 Change the Port 33 Admin State to **OOS,MT** (ANSI) or **Locked,maintenance** (ETSI).

Step 14 Click the **Maintenance** tab.

Step 15 For Channel #1, change Operating Mode to **Pass Through**.

Step 16 Repeat Steps 11 through 15 for the east 32WSS card.

Step 17 Display the west 32WSS card in card view.

Step 18 Click the **Provisioning** > **Optical Chn** > **Parameters** tabs.

Step 19 Verify that the Port 33 power level reaches the provisioned VOA Power Ref setpoint.

Step 20 Repeat Steps 17 through 19 for the east 32WSS card.

Step 21 Repeat Steps 9 through 20 for the remaining 32 wavelengths of the 100 GHz grid to verify all 32WSS VOAs.

Step 22 Display the west OPT-BST card (if present) in card view.

Step 23 Click the **Provisioning** > **Optical Chn** > **Parameters** tabs.

Step 24 Change the Port 1 Admin State to **OOS,MT** (ANSI) or **Locked,maintenance** (ETSI).

Step 25 Repeat Steps 22 through 24 for the east OPT-BST card.

Step 26 Display the west OPT-PRE card in card view.

Step 27 Click the **Provisioning** > **Optical Chn** > **Parameters** tabs.

Step 28 Change the Port 6 Admin State to **OOS,MT** (ANSI) or **Locked,maintenance** (ETSI).

Step 29 Repeat Steps 26 through 28 for the east OPT-PRE card.

Step 30 If an OPT-BST card is installed on the west, complete the "DLP-G79 Verify the OPT-BST Amplifier Laser and Power" task on page 4-22 OPT-BST to ensure that the amplifier is working properly.

Step 31 Repeat 30 for the east OPT-BST.

Step 32 Complete the "DLP-G80 Verify the OPT-PRE Amplifier Laser and Power" task on page 4-23 on the west OPT-PRE to ensure that the amplifier is working properly.

Step 33 Tune the tunable laser to the first wavelength of the 100 GHz grid and connect it to the CHAN RX 30.3 port on the west 32WSS card.

Step 34 Display the west 32-WSS in card view.

Step 35 Click the **Maintenance** tab.

Step 36 For Channel #1, change Operating Mode to **Add Drop**.

Step 37 Click the **Provisioning** > **Optical Chn** > **Parameters** tabs.

Step 38 Verify that the Port 1 power value reaches the provisioned VOA Power Ref setpoint.

Step 39 Display the 32DMX card in card view.

Step 40 Click the **Provisioning** > **Optical Chn** > **Parameters** tabs.

Step 41 Change the Port 33 Admin State to **OOS,MT** (ANSI) or **Locked,maintenance** (ETSI).

Step 42 Verify that the Port 1 power value reaches the provisioned VOA Power Ref setpoint.

Step 43 (optional) Connect a power meter to the CHAN TX 1 port through the patch panel and verify that the physical optical power coming from the drop port 1 on the west 32DMX is consistent with the value read on the meter, within 0.5 dB.

Step 44 Repeat Steps 34 through 43 for the remaining wavelengths on the 100 GHz.

Step 45 Remove the loopback created in Step 6.

Step 46 Complete the "NTP-G37 Run Automatic Node Setup" procedure on page 3-58 to restore the original configuration.

Step 47 Create a physical loopback on the east OPT-BST amplifier by connecting a patch cord the LINE TX port to the LINE RX port with 10-dB bulk attenuator.

Step 48 Verify that the OSC link becomes active on the east OSCM card. (The OSC Termination must already be provisioned. If not, complete the "DLP-G75 Create OSC Terminations" task on page 3-61.)

Step 49 Repeat Steps 34 through 48 for the east side 32WSS.

Step 50 Restore the default admin states that were changed to OOS,MT/Locked,maintenance in Steps 12, 13, 24, 28, and 41.

Step 51 Click the **Alarms** tab.

a. Verify that the alarm filter is not on. See the "DLP-G128 Disable Alarm Filtering" task on page 7-32 as necessary.

b. Verify that no unexplained alarms appear on the network. If alarms appear, investigate and resolve them before continuing. Refer to the *Cisco ONS 15454 SONET and DWDM Troubleshooting Guide* for procedures.

Stop. **You have completed this procedure**.

NTP-G44 Perform the Anti-ASE Hub Node Acceptance Test

Purpose	This procedure tests an anti-ASE hub node.
Tools/Equipment	• A tunable laser • An optical power meter or optical spectrum analyzer • 2 bulk attenuators (10 dB) LC
Prerequisite Procedures	Chapter 3, "Turn Up a Node."
Required/As Needed	Required
Onsite/Remote	Onsite
Security Level	Superuser

Step 1 Complete the "DLP-G46 Log into CTC" task on page 2-25 at the node where you want to perform the acceptance test. If you are already logged in, continue with Step 2.

Step 2 From the View menu, choose **Go to Network View**.

Step 3 Click the **Alarms** tab.

a. Verify that the alarm filter is not on. See the "DLP-G128 Disable Alarm Filtering" task on page 7-32 as necessary.

b. Verify that no unexplained alarms appear on the network. If alarms appear, investigate and resolve them before continuing. Refer to the *Cisco ONS 15454 SONET and DWDM Troubleshooting Guide* for procedures.

Step 4 In node view, click the **Provisioning > WDS-ANS > Port Status** tabs. Verify that all statuses under Link Status are Success - Changed, Success - Unchanged, or Not Applicable. If not, complete the "NTP-G37 Run Automatic Node Setup" procedure on page 3-58.

Step 5 From your Cisco MetroPlanner site configuration file, identify the dropped and added channels that are configured in pass-through mode in both directions. Mark these channels and skip the related optical test for the add and drop section involved. The channel pass-through connections are verified separately.

Note Configuring a channel pass-through mode means the channel is dropped along one direction by a 32DMX-O (15xx.xx TX port) located on one side (west or east) of the shelf, and then added by another 32MUX-O (1522.22 RX port) on the opposite side of the shelf but in the same direction. The channel is not terminated inside the site.

Step 6 Create a loopback on the west OPT-BST amplifier by connecting a patch cord from the LINE TX port to the LINE RX port with 10-dB bulk attenuator.

Step 7 Verify that the OSC link becomes active on the west OSCM or OSC-CSM card. (The OSC Termination must already be provisioned. If not, complete the "DLP-G75 Create OSC Terminations" task on page 3-61.)

Step 8 For pass-through channels, continue with Step 9. For add and drop channels, continue with Step 17.

Step 9 Verify the first channel connection configured in pass-through mode in both directions:

a. Set the output power on the tunable laser to a nominal value, such as –3 dBm, and tune it on the correspondent wavelength of the 100-GHz ITU-T grid.

b. Connect the tunable laser to the LINE RX port of the east OPT-BST using a 10-dB bulk attenuator.

Step 10 Complete the "DLP-G80 Verify the OPT-PRE Amplifier Laser and Power" task on page 4-23 for the east OPT-PRE amplifier.

Step 11 Complete the "DLP-G81 Verify the 32DMX-O or 32DMX Power" task on page 4-24 for the east 32MUX-O and 32DMX-O cards.

Step 12 Complete the "DLP-G79 Verify the OPT-BST Amplifier Laser and Power" task on page 4-22 for the west OPT-BST amplifier.

Step 13 Complete the "DLP-G80 Verify the OPT-PRE Amplifier Laser and Power" task on page 4-23 for the west OPT-PRE amplifier.

Step 14 Complete the "DLP-G78 Verify the 32MUX-O and 32DMX-O Power" task on page 4-22 for the east 32MUX-O and 32DMX-O cards.

Step 15 Complete the "DLP-G79 Verify the OPT-BST Amplifier Laser and Power" task on page 4-22 for the east OPT-BST amplifier.

Step 16 If you have add and drop channels, continue with Step 17 to verify. If not, continue with Step 27.

Step 17 Tune the tunable laser on the first wavelength of the 100-GHz ITU-T grid that is not a pass-through wavelength. Connect it to the CHAN RX *nn* port on the west 32MUX-O, where *nn* is the first add or drop channel.

Step 18 Display the west 32MUX-O in card view.

Step 19 Click the **Provisioning > Optical Chn > Parameter**s tabs.

Step 20 Change the Admin State of Port *nn* to **OOS,MT/Locked,maintenance**.

Step 21 Check that the power value on Port *nn* reaches the provisioned setpoint (VOA Power Ref).

Step 22 Display the west 32DMX-O or 32DMX in card view.

Step 23 Click the **Provisioning > Optical Chn > Parameter**s tabs.

Step 24 Change the Admin State of Port *nn* to **OOS,MT/Locked,maintenance**.

Step 25 Check that the power value on Port *nn* reaches the provisioned setpoint (VOA Power Ref).

Step 26 (Optional.) Connect a power meter to the CHAN TX *nn* port through the patch panel and verify that the physical optical power coming out of drop Port *nn* on the west 32DMX-O is consistent with the value read on the meter within 0.5 dB.

Step 27 Repeat Steps 17 through 26 for the remaining wavelengths on the 100-GHz grid that are not pass-through wavelengths.

Step 28 Remove the loopback connection on the west OPT-BST.

Step 29 Complete the "NTP-G37 Run Automatic Node Setup" procedure on page 3-58 to restore the original configuration.

Step 30 Create a loopback on the east OPT-BST amplifier by connecting a patch cord from the LINE TX port to the LINE RX port with 10-dB bulk attenuator.

Step 31 Verify that the OSC link becomes active on the east OSCM card. (The OSC termination must be already provisioned. If not, complete the "DLP-G75 Create OSC Terminations" task on page 3-61.)

Step 32 Repeat 17 through 31 for the east side cards.

Step 33 Restore the default admin state (IS,AINS/Unlocked,automaticInService) on all the ports previously set to OOS,MT/Locked,maintenance.

Stop. You have completed this procedure.

NTP-G45 Perform the Symmetric Line Node with OSCM Cards Acceptance Test

Purpose	This procedure tests a symmetric line node with OSCM cards.
Tools/Equipment	• A tunable laser • An optical power meter or optical spectrum analyzer • 2 bulk attenuators (10 dB) LC
Prerequisite Procedures	Chapter 3, "Turn Up a Node."
Required/As Needed	Required
Onsite/Remote	Onsite
Security Level	Superuser

Step 1 Complete the "DLP-G46 Log into CTC" task on page 2-25 at the node where you want to perform the acceptance test. If you are already logged in, continue with Step 2.

Step 2 From the View menu, choose **Go to Network View**.

Step 3 Click the **Alarms** tab.

a. Verify that the alarm filter is not on. See the "DLP-G128 Disable Alarm Filtering" task on page 7-32 as necessary.

b. Verify that no unexplained alarms appear on the network. If alarms appear, investigate and resolve them before continuing. Refer to the *Cisco ONS 15454 SONET and DWDM Troubleshooting Guide* for procedures.

Step 4 In node view, click the **Provisioning** > **WDS-ANS** > **Port Status** tabs.

Step 5 In node view, click the **Provisioning** > **WDS-ANS** > **Port Status** tabs. Verify that all statuses under Link Status are Success - Changed, Success - Unchanged, or Not Applicable. If not, complete the "NTP-G37 Run Automatic Node Setup" procedure on page 3-58.

Step 6 Create a loopback on the west OPT-BST amplifier by connecting a patch cord from the LINE TX port to the LINE RX port with 10-dB bulk attenuator.

Step 7 Verify that the OSC link becomes active on the west OSCM card. (The OSC termination must be already provisioned. If not, complete the "DLP-G75 Create OSC Terminations" task on page 3-61.)

Note Due to the OSC signal loopback, a SDCC Termination Failure alarm might be raised.

Step 8 Set the output power on the tunable laser to a nominal value, such as –3 dBm, and tune it to the first available wavelength of the 100-GHz ITU-T grid. Connect it to the LINE RX port of the OPT-BST-E using a 10-dB bulk attenuator.

Step 9 If an OPT-PRE card is installed on the east side, complete the "DLP-G80 Verify the OPT-PRE Amplifier Laser and Power" task on page 4-23 for it. If not, continue with Step 10.

Step 10 Complete the "DLP-G79 Verify the OPT-BST Amplifier Laser and Power" task on page 4-22 for the west OPT-BST amplifier.

Step 11 If an OPT-PRE amplifier is installed on the west side, complete the "DLP-G80 Verify the OPT-PRE Amplifier Laser and Power" task on page 4-23. It not, continue with continue with Step 12.

Step 12 Complete the "DLP-G79 Verify the OPT-BST Amplifier Laser and Power" task on page 4-22 for the east OPT-BST amplifier.

Step 13 Remove the loopback on the west OPT-BST amplifier created in Step 6.

Step 14 Repeat Steps 6 through 12 for the east side line connection.

Step 15 Complete the "NTP-G37 Run Automatic Node Setup" procedure on page 3-58 to restore the original configuration.

Stop. **You have completed this procedure**.

NTP-G46 Perform the Symmetric Line Node with OSC-CSM Cards Acceptance Test

Purpose	This procedure tests a symmetric line node with OSC-CSM cards.
Tools/Equipment	• A tunable laser • An optical power meter or optical spectrum analyzer • 2 bulk attenuators (10 dB) LC
Prerequisite Procedures	Chapter 3, "Turn Up a Node."
Required/As Needed	Required
Onsite/Remote	Onsite
Security Level	Superuser

Step 1 Complete the "DLP-G46 Log into CTC" task on page 2-25 at the node where you want to perform the acceptance test. If you are already logged in, continue with Step 2.

Step 2 From the View menu, choose **Go to Network View**.

Step 3 Click the **Alarms** tab.

a. Verify that the alarm filter is not on. See the "DLP-G128 Disable Alarm Filtering" task on page 7-32 as necessary.

b. Verify that no unexplained alarms appear on the network. If alarms appear, investigate and resolve them before continuing. Refer to the *Cisco ONS 15454 SONET and DWDM Troubleshooting Guide* for procedures.

Step 4 In node view, click the **Provisioning** > **WDS-ANS** > **Port Status** tabs. Verify that all statuses under Link Status are Success - Changed, Success - Unchanged, or Not Applicable. If not, complete the "NTP-G37 Run Automatic Node Setup" procedure on page 3-58.

Step 5 Create a loopback on the west OSC-CSM by connecting the LINE TX port with LINE RX port using a patch cord and 10-dB bulk attenuator.

Step 6 Verify that the OSC link becomes active on the west OSC-CSM card. (The OSC termination must be already provisioned. If not, complete the "DLP-G75 Create OSC Terminations" task on page 3-61.)

Note Due to the OSC signal loopback, a SDCC Termination Failure alarm might be raised.

Step 7 If the OSC link is turned up, continue with Step 8. If not, perform the following troubleshooting procedure:

a. Remove 10-dB bulk attenuator between LINE TX to LINE RX connection and connect using only the patch cord. If the OSC becomes active, continue with Step 8, otherwise continue this troubleshooting procedure.

b. Display the OSC-CSM in card view.

c. Modify the OSC Fail Low thresholds. Click the **Provisioning > Optical Line > Optics Thresholds** tabs, and change the Port 6 opwrMin (minimum power) to –40 dBm.

d. Modify the COM TX Fail Low Threshold. Change the Port 4 opwrMin (minimum power) to –30 dBm.

Note If the OSC link does not turn up, replace the card.

Step 8 Set the output power on the tunable laser to a nominal value, such as –3 dBm, and tune it on the first available wavelength of the 100-GHz ITU-T grid.

Step 9 Connect the tunable laser to the east OSC-CSM LINE RX port using a 10-dB bulk attenuator.

Step 10 If an OPT-PRE card is installed on the east side, complete the "DLP-G80 Verify the OPT-PRE Amplifier Laser and Power" task on page 4-23 for it. If not, continue with Step 11.

Step 11 Complete the "DLP-G82 Verify the OSC-CSM Power" task on page 4-24 on the west OSC-CSM card.

Note As a consequence of OSC link activation, the 1 x 1 optical switch inside the west OSC-CSM card must be in closed position to enable the pass through of the optical power launched by the tunable laser.

Step 12 Complete the "DLP-G80 Verify the OPT-PRE Amplifier Laser and Power" task on page 4-23 for the west OPT-PRE amplifier.

Step 13 Complete the "DLP-G84 Verify the OSC-CSM Incoming Power" task on page 4-25 on the east OSC-CSM card.

Step 14 Remove the loopback created on the west OSC-CSM in Step 5.

Step 15 Repeat Steps 5 through 14 for the east side connections.

Step 16 Complete the "NTP-G37 Run Automatic Node Setup" procedure on page 3-58 to restore the original configuration.

Stop. **You have completed this procedure**.

NTP-G47 Perform the Asymmetric Line Node with OSC-CSM and OSCM Cards Acceptance Test

Purpose	This procedure tests an asymmetric line node with an OSC-CSM card installed on one side and an OSCM card installed on the other.
Tools/Equipment	• A tunable laser • An optical power meter or optical spectrum analyzer • 2 bulk attenuators (10 dB) LC
Prerequisite Procedures	Chapter 3, "Turn Up a Node."
Required/As Needed	Required
Onsite/Remote	Onsite
Security Level	Superuser

Step 1 Complete the "DLP-G46 Log into CTC" task on page 2-25 at the node where you want to perform the acceptance test. If you are already logged in, continue with Step 2.

Step 2 From the View menu, choose **Go to Network View**.

Step 3 Click the **Alarms** tab.

a. Verify that the alarm filter is not on. See the "DLP-G128 Disable Alarm Filtering" task on page 7-32 as necessary.

b. Verify that no unexplained alarms appear on the network. If alarms appear, investigate and resolve them before continuing. Refer to the *Cisco ONS 15454 SONET and DWDM Troubleshooting Guide* for procedures.

Step 4 In node view, click the **Provisioning** > **WDS-ANS** > **Port Status** tabs. Verify that all statuses under Link Status are Success - Changed, Success - Unchanged, or Not Applicable. If not, complete the "NTP-G37 Run Automatic Node Setup" procedure on page 3-58.

Step 5 Create a loopback on the OSC-CSM card by connecting the LINE TX port with LINE RX port using a patch cord and 10-dB bulk attenuator.

Step 6 Verify that the OSC link becomes active on the OSC-CSM card. (The OSC termination must be already provisioned. If not, complete the "DLP-G75 Create OSC Terminations" task on page 3-61.)

Note Due to the OSC signal loopback, a SDCC Termination Failure alarm might be raised.

Step 7 If the OSC link is turned up, continue with Step 8. If not, perform the following troubleshooting procedure:

a. Remove 10-dB bulk attenuator between LINE TX to LINE RX connection and connect using only the patch cord. If the OSC becomes active, continue with Step 8, otherwise continue this troubleshooting procedure.

b. Display the OSC-CSM in card view.

c. Modify the OSC Fail Low thresholds. Click the **Provisioning > Optical Line > Optics Thresholds** tabs, and change the Port 6 opwrMin (minimum power) to –40 dBm.

d. Modify the COM TX Fail Low Threshold. Change the Port 4 opwrMin (minimum power) to –30 dBm.

Note If the OSC link does not turn up, replace the card.

Step 8 Set the output power on the tunable laser to a nominal value, such as –3 dBm, and tune it on the first available wavelength of the 100-GHz ITU-T grid.

Step 9 Connect the tunable laser to the OSC-CSM LINE RX port using a 10-dB bulk attenuator.

Step 10 Display the OPT-BST on the side opposite the OSC-CSM in card view.

Step 11 Click the **Provisioning > Optical Line > Parameters** tabs. Verify that the power value on Port 2 (Out Com) is equal to the optical power from the tunable laser.

Step 12 If an OPT-PRE card is installed on the side opposite the OSC-CSM, complete the "DLP-G80 Verify the OPT-PRE Amplifier Laser and Power" task on page 4-23 for it. If not, continue with Step 13.

Step 13 Complete the "DLP-G82 Verify the OSC-CSM Power" task on page 4-24 on the OSC-CSM card.

Note As a consequence of OSC link activation, the 1 x 1 optical switch inside the west OSC-CSM card must be closed to allow the optical power from the tunable laser to pass through.

Step 14 If an OPT-PRE card is installed on the same side as the OSC-CSM, complete the "DLP-G80 Verify the OPT-PRE Amplifier Laser and Power" task on page 4-23 for it. If not, continue with Step 15.

Step 15 Complete the "DLP-G79 Verify the OPT-BST Amplifier Laser and Power" task on page 4-22 for the OPT-BST card installed on the opposite side of the OSC-CSM.

Step 16 Remove the loopback fiber on the OSC-CSM card.

Step 17 Launch ANS:

a. In node view, click the **Provisioning > WDM-ANS > Port Status** tabs.

b. Click **Launch ANS**.

Step 18 Create a loopback on the OPT-BST card installed on the same side as the OSCM card by connecting the LINE TX port with LINE RX port using a patch cord and 10-dB bulk attenuator.

Step 19 Verify that the OSC link becomes active on the OSCM or OSC-CSM card. (The OSC termination must be already provisioned. If not, complete the "DLP-G75 Create OSC Terminations" task on page 3-61.)

Note Due to the OSC signal loopback, a SDCC Termination Failure alarm might be raised.

Step 20 Complete the "DLP-G80 Verify the OPT-PRE Amplifier Laser and Power" task on page 4-23 for the OPT-PRE amplifier card installed on the same side as the OSCM.

Step 21 Complete the "DLP-G79 Verify the OPT-BST Amplifier Laser and Power" task on page 4-22 for the OPT-BST card installed on the opposite side of the OSCM.

Step 22 Display the OPT-BST on the side opposite the OSCM in card view.

Step 23 Click the **Provisioning > Optical Line > Parameters** tabs. Verify that the power value on Port 2 (Out Com) is equal to the optical power from the tunable laser.

Step 24 If an OPT-PRE card is installed on the side opposite the OSCM, complete the "DLP-G80 Verify the OPT-PRE Amplifier Laser and Power" task on page 4-23 for it. If not, continue with Step 25.

Step 25 Remove the loopback fiber on the OPT-BST amplifier card.

Step 26 Launch ANS:

a. In node view, click the **Provisioning > WDM-ANS > Port Status** tabs.

b. Click **Launch ANS**.

Stop. **You have completed this procedure**.

NTP-G48 Perform the Symmetric OADM Node with OSCM Cards Acceptance Test

Purpose	This procedure checks the integrity of all the optical connections inside a symmetric OADM node with OSCM cards. Three connection types are tested: • Express • Pass-through • Add/Drop
Tools/Equipment	• A tunable laser • An optical power meter or optical spectrum analyzer • 2 bulk attenuators (10 dB) LC
Prerequisite Procedures	Chapter 3, "Turn Up a Node."
Required/As Needed	Required
Onsite/Remote	Onsite
Security Level	Superuser

Step 1 Complete the "DLP-G46 Log into CTC" task on page 2-25 at the OADM node where you want to perform the acceptance test. If you are already logged in, continue with Step 2.

Step 2 From the View menu, choose **Go to Network View**.

Step 3 Click the **Alarms** tab.

a. Verify that the alarm filter is not on. See the "DLP-G128 Disable Alarm Filtering" task on page 7-32 as necessary.

b. Verify that no unexplained alarms appear on the network. If alarms appear, investigate and resolve them before continuing. Refer to the *Cisco ONS 15454 SONET and DWDM Troubleshooting Guide* for procedures.

Step 4 In node view, click the **Provisioning** > **WDS-ANS** > **Port Status** tabs. Verify that all statuses under Link Status are Success - Changed, Success - Unchanged, or Not Applicable. If not, complete the "NTP-G37 Run Automatic Node Setup" procedure on page 3-58.

Step 5 Check your Cisco MetroPlanner site configuration file to verify the presence of added and dropped bands (including four channels at 100 GHz) configured in pass-through mode in either direction.

Note Configuring a band in pass-through mode means the band is dropped in one direction by an AD-xB-xx.x card on one side (east or west) of the node, then added by another AD-xB-x.xx card on the opposite side in the same direction. The band is not terminated inside the node.

Step 6 If no bands are configured in pass-through mode, continue with Step 7. If a band is configured in pass-through mode, mark it and skip the related optical test for the express, add, and drop sections. Band pass-through connections are verified separately.

Step 7 Check the site configuration file from Cisco MetroPlanner to verify the presence of dropped or added channels configured in pass-through mode in either direction.

Note Configuring a channel in pass-through mode means the channel is dropped in one direction by an AD-xC-xx.x card on one side (east or west) of the node, then added by another AD-xC x.xx card on the opposite side in the same direction. The channel is not terminated inside the node.

Step 8 If no channels are configured in pass-through mode, continue with Step 9. If a channel is configured in pass-through mode, mark it and skip the related optical test for the express, add and drop sections. Channel pass-through connections are verified separately.

Step 9 Create a loopback on the west OPT-BST by connecting the LINE TX port to the LINE RX port using a patch cord and 10-dB bulk attenuator.

Step 10 Verify that the OSC link becomes active on the west OSCM card. (The OSC termination must be already provisioned. If not, complete the "DLP-G75 Create OSC Terminations" task on page 3-61.)

Step 11 If the OSC link becomes active, continue with Step 12. If the OSC link does not turn up, perform the following steps:

a. Modify the OSC Fail Low thresholds. Click the **Provisioning > Optical Line > Optics Thresholds** tabs and change the Port 6 opwrMin (minimum power) to –40 dBm.

b. Modify the COM TX Fail Low Threshold. Change the Port 4 opwrMin (minimum power) to –30 dBm.

c. If the OSC link turns up, continue with Step 12. If the OSC link is still down, disconnect the OSCM card from the OPT-BST.

d. Create a loopback on the OSCM card by connecting patch cable from the OSC TX port to the OSC RX port using a 10-dB bulk attenuator.

e. If the OSC link turns up, replace the OPT-BST card. If the OSC link does not turn up, replace the OSCM card.

Note Due to the OSC signal loopback, a SDCC Termination Failure alarm might be raised.

Step 12 If the node has express bands or channels, complete the "DLP-G85 Verify Express Channel Connections—OADM Node with OSCM Cards" task on page 4-26. If the node does not have express bands or channels, continue with Step 13.

Step 13 If connections configured in pass-through mode are present (noted inSteps 5 and 7), complete the "DLP-G89 Verify OADM Node Pass-Through Channel Connections" task on page 4-29. If not, continue with Step 14.

Step 14 If connections have add/drop connections, complete the "DLP-G93 Verify Add and Drop Connections on OADM Node with OSCM Card" task on page 4-33.

Stop. **You have completed this procedure**.

NTP-G49 Perform the Symmetric OADM Node with OSC-CSM Cards Acceptance Test

Purpose	This procedure checks the integrity of all the optical connections inside a symmetric OADM node with OSC-CSM cards. Three connection types are tested: • Express • Pass-through • Add/Drop
Tools/Equipment	• A tunable laser • An optical power meter or optical spectrum analyzer • 2 bulk attenuators (10 dB) LC
Prerequisite Procedures	Chapter 3, "Turn Up a Node."
Required/As Needed	Required
Onsite/Remote	Onsite
Security Level	Superuser

Step 1 Complete the "DLP-G46 Log into CTC" task on page 2-25 at the OADM node where you want to perform the acceptance test. If you are already logged in, continue with Step 2.

Step 2 From the View menu, choose **Go to Network View**.

Step 3 Click the **Alarms** tab.

a. Verify that the alarm filter is not on. See the "DLP-G128 Disable Alarm Filtering" task on page 7-32 as necessary.

b. Verify that no unexplained alarms appear on the network. If alarms appear, investigate and resolve them before continuing. Refer to the *Cisco ONS 15454 SONET and DWDM Troubleshooting Guide* for procedures.

Step 4 In node view, click the **Provisioning** > **WDS-ANS** > **Port Status** tabs. Verify that all statuses under Link Status are Success - Changed, Success - Unchanged, or Not Applicable. If not, complete the "NTP-G37 Run Automatic Node Setup" procedure on page 3-58.

Step 5 Check the Cisco MetroPlanner site configuration file to verify the presence of added and dropped bands (including 4 channels at 100 GHz) configured in pass-through mode in either direction.

Note Configuring a band in pass-through mode means the band is dropped in one direction by an AD-xB-xx.x card on one side (east or west) of the node, then added by another AD-xB-x.xx card on the opposite side in the same direction. The band is not terminated inside the node.

Step 6 If no bands are configured in pass-through mode, continue with Step 7. If a band is configured in pass-through mode, mark it and skip the related optical test for the express, add, and drop sections. Band pass-through connections are verified separately.

Step 7 Check the site configuration file from Cisco MetroPlanner to verify the presence of dropped or added channels configured in pass-through mode in either direction.

Note Configuring a channel in pass-through mode means the channel is dropped in one direction by an AD-xC-xx.x card on one side (east or west) of the node, then added by another AD-xC x.xx card on the opposite side in the same direction. The channel is not terminated inside the node.

Step 8 If no channels are configured in pass-through mode, continue with Step 9. If a channel is configured in pass-through mode, mark it and skip the related optical test for the express, add and drop sections. Channel pass-through connections are verified separately.

Step 9 Create a loopback on the west OSC-CSM card by connecting the LINE TX port to the LINE RX port using a patch cord and 10-dB bulk attenuator.

Step 10 Verify that the OSC link becomes active on the west OSC-CSM card. (The OSC termination must be already provisioned. If not, complete the "DLP-G75 Create OSC Terminations" task on page 3-61.)

Note Due to the OSC signal loopback, a SDCC Termination Failure alarm might be raised.

Step 11 If the OSC link becomes active, continue with Step 12. If the OSC link does not turn up, perform the following troubleshooting steps:

a. Remove the 10-dB bulk attenuator between the LINE TX and LINE RX connection. If the OSC link becomes active, continue with Step 12. If not, continue with Step b.

b. Modify the OSC Fail Low thresholds. Click the **Provisioning > Optical Line > Optics Thresholds** tabs and change the Port 6 opwrMin (minimum power) to –40 dBm.

c. Modify the COM TX Fail Low Threshold. Change the Port 3 opwrMin (minimum power) to –30 dBm.

d. If the OSC link turns up, continue with Step 12. If it does not turn up, replace the OSC-CSM card.

Step 12 If the node has express bands or channels, complete the "DLP-G85 Verify Express Channel Connections—OADM Node with OSCM Cards" task on page 4-26. If the node does not have express bands or channels, continue with Step 13.

Step 13 If connections configured in pass-through mode are present (noted in Steps 5 and 7), complete the "DLP-G89 Verify OADM Node Pass-Through Channel Connections" task on page 4-29. If not, continue with Step 14.

Step 14 If connections have add/drop connections, complete the "DLP-G94 Verify Add and Drop Connections on OADM Node with OSC-CSM Card" task on page 4-35.

Stop. **You have completed this procedure**.

NTP-G50 Perform the Symmetric Passive OADM Node with OSC-CSM Cards Acceptance Test

Purpose	This procedure checks the integrity of all the optical connections inside a symmetric passive OADM node with OSC-CSM cards.Three connection types are tested: • Express • Pass-through • Add/Drop
Tools/Equipment	• A tunable laser • An optical power meter or optical spectrum analyzer • 2 bulk attenuators (10 dB) LC
Prerequisite Procedures	Chapter 3, "Turn Up a Node."
Required/As Needed	Required
Onsite/Remote	Onsite
Security Level	Superuser

Step 1 Complete the "DLP-G46 Log into CTC" task on page 2-25 at the OADM node where you want to perform the acceptance test. If you are already logged in, continue with Step 2.

Step 2 From the View menu, choose **Go to Network View**.

Step 3 Click the **Alarms** tab.

a. Verify that the alarm filter is not on. See the "DLP-G128 Disable Alarm Filtering" task on page 7-32 as necessary.

b. Verify that no unexplained alarms appear on the network. If alarms appear, investigate and resolve them before continuing. Refer to the *Cisco ONS 15454 SONET and DWDM Troubleshooting Guide* for procedures.

Step 4 In node view, click the **Provisioning** > **WDS-ANS** > **Port Status** tabs. Verify that all statuses under Link Status are Success - Changed, Success - Unchanged, or Not Applicable. If not, complete the "NTP-G37 Run Automatic Node Setup" procedure on page 3-58.

Step 5 Check the Cisco MetroPlanner site configuration file to verify the presence of a dropped/added bands (including 4 channels at 100 GHz) configured in pass-through mode in either direction.

Note Configuring a band in pass-through mode means the band is dropped in one direction by an AD-xB-xx.x card on one side (east or west) of the node, then added by another AD-xB x.xx card on the opposite side in the same direction. The band is not terminated inside the node.

Step 6 If no bands are configured in pass-through mode, continue with Step 7. If a band is configured in pass-through mode, mark it and skip the related optical test for the express, add, and drop sections. Band pass-through connections are verified separately.

Step 7 Check the site configuration file from Cisco MetroPlanner to verify the presence of dropped or added channels configured in pass-through mode in either direction.

Note Configuring a channel in pass-through mode means the channel is dropped in one direction by an AD-xC-xx.x card on one side (east or west) of the node, then added by another AD-xC x.xx card on the opposite side in the same direction. The channel is not terminated inside the node.

Step 8 If no channels are configured in pass-through mode, continue with Step 9. If a channel is configured in pass-through mode, mark it and skip the related optical test for the express, add, and drop sections. Channel pass-through connections are verified separately.

Step 9 Create a loopback on the west OSC-CSM card by connecting the LINE TX port to the LINE RX port using a patch cord and 10-dB bulk attenuator.

Step 10 Verify that the OSC link becomes active on the west OSC-CSM card. (The OSC termination must be already provisioned. If not, complete the "DLP-G75 Create OSC Terminations" task on page 3-61.)

Note Due to the OSC signal loopback, a SDCC Termination Failure alarm might be raised.

Step 11 If the OSC link becomes active, continue with Step 12. If the OSC link does not turn up, perform the following troubleshooting steps:

a. Remove the 10-dB bulk attenuator between the LINE TX and LINE RX connection. If the OSC link becomes active, continue with Step 12. If not, continue with Step b.

b. Modify the OSC Fail Low thresholds. Click the **Provisioning > Optical Line > Optics Thresholds** tabs and change the Port 6 opwrMin (minimum power) to –40 dBm.

c. Modify the COM TX Fail Low Threshold. Change the Port 3 opwrMin (minimum power) to –30 dBm.

d. If the OSC link turns up, continue with Step 12. If it does not turn up, replace the OSC-CSM card.

Step 12 If the node has express bands or channels, complete the "DLP-G86 Verify Express Channel Connections—OADM Node with OSC-CSM Cards" task on page 4-27. If the node does not have express bands or channels, continue with Step 13.

Step 13 If connections configured in pass-through mode are present (noted in Steps 5 and 7), complete the "DLP-G89 Verify OADM Node Pass-Through Channel Connections" task on page 4-29. If not, continue with Step 14.

Step 14 If connections have add/drop connections, complete the "DLP-G94 Verify Add and Drop Connections on OADM Node with OSC-CSM Card" task on page 4-35.

Stop. **You have completed this procedure**.

DLP-G78 Verify the 32MUX-O and 32DMX-O Power

Purpose	This task verifies 32MUX-O and 32DMX-O power.
Tools/Equipment	None
Prerequisite Procedures	DLP-G46 Log into CTC, page 2-25
Required/As Needed	As needed
Onsite/Remote	Onsite or remote
Security Level	Superuser only

Step 1 Display the 32MUX-O in card view.

Step 2 Click the **Provisioning > Optical Chn > Parameters** tabs.

Step 3 Change the Admin State of the correspondent port to **OOS,MT/Locked,maintenance**.

Step 4 Check that the power value on the port reaches the provisioned setpoint (VOA Power Ref).

Step 5 Display the east 32DMX-O in card view.

Step 6 Click the **Provisioning > Optical Chn > Parameters** tabs.

Step 7 Change the Admin State of correspondent port to **OOS,MT/Locked,maintenance**.

Step 8 Check that the power value on the port reaches the provisioned setpoint (VOA Power Ref).

Step 9 Click the **Provisioning > Opt Ampli Line > Parameters** tabs.

Step 10 Return to your originating procedure (NTP).

DLP-G79 Verify the OPT-BST Amplifier Laser and Power

Purpose	This task verifies that the OPT-BST amplifier laser is on and provisioned to the correct power.
Tools/Equipment	None
Prerequisite Procedures	DLP-G46 Log into CTC, page 2-25
Required/As Needed	As needed
Onsite/Remote	Onsite or remote
Security Level	Superuser only

Step 1 In node view, double-click the OPT-BST amplifier to display the card view.

Step 2 If the Laser Status displayed in the information area is “On” continue with Step 3. If not, complete the following steps:

- **a.** Click the **Maintenance** > **ALS** tabs.
- **b.** Check the OSRI setting. If it is set to On, change it to Off and click **Apply**.
- **c.** Check the Laser Status. If it changes to On, continue with Step 3. If not, contact your next level of support. The amplifier might need to be replaced.

Step 3 Click the **Provisioning > Opt Ampli Line > Parameters** tabs.

Step 4 Verify that the Port 2 Optical Power Set-Point is greater than or equal to 2 dBm. (This value includes the ASE power contribution.)

Note When the laser is off, the Optical Power Set-Point is –1 dBm. Disregard this value, as it is not a significant optical power.

If the optical power is not greater than or equal to 2 dBm, do not continue. Begin troubleshooting or contact your next level of support.

Step 5 Return to your originating procedure (NTP).

DLP-G80 Verify the OPT-PRE Amplifier Laser and Power

Purpose	This task verifies that the OPT-PRE amplifier laser is on and provisioned to the correct power.
Tools/Equipment	None
Prerequisite Procedures	DLP-G46 Log into CTC, page 2-25
Required/As Needed	As needed
Onsite/Remote	Onsite or remote
Security Level	Superuser only

Step 1 In node view, double-click the OPT-PRE amplifier to display the card view.

Step 2 If the Laser Status displayed in the information area is “On” continue with Step 3. If not, complete the following steps:

a. Click the **Maintenance > ALS** tabs.

b. Check the OSRI setting. If it is set to On, change it to Off and click **Apply**.

c. Check the Laser Status. If it changes to On, continue with Step 3. If not, contact your next level of support. The amplifier might need to be replaced.

Step 3 Click the **Provisioning > Opt Ampli Line > Parameters** tabs.

Step 4 Verify that the Port 2 Optical Power Set-Point value is greater than or equal to 2 dBm. (This value includes the ASE power contribution.)

Note When the laser is off, the Optical Power Set-Point is –1 dBm. Disregard this value, as it is not a significant optical power.

If the optical power is not greater than or equal to 2 dBm, do not continue. Begin troubleshooting or contact your next level of support.

Step 5 Verify that the DCU Insertion Loss value is less than or equal to 10 dB.

Step 6 Return to your originating procedure (NTP).

DLP-G81 Verify the 32DMX-O or 32DMX Power

Purpose	This task verifies that the 32DMX-O or 32DMX card is provisioned to the correct power.
Tools/Equipment	None
Prerequisite Procedures	DLP-G46 Log into CTC, page 2-25
Required/As Needed	As needed
Onsite/Remote	Onsite or remote
Security Level	Superuser only

Step 1 Display the 32DMX-O or 32DMX card in card view.

Step 2 Click the **Provisioning > Optical Chn > Parameters** tabs.

Step 3 Change the Admin State for Port 1 to **OOS,MT/Locked,maintenance**.

Step 4 Verify that the VOA Power Ref reaches the provisioned set point.

Step 5 (Optional.) Connect a power meter to the CHAN TX 01 port through the patch panel. Verify that the physical optical power value coming from drop Port 1 on the west 32DMX-O or 32DMX card is consistent with the value read (the maximum allowed error is +/– 0.5 dBm).

Step 6 Change the Admin State for Port 1 to **OOS,DSLB** (ANSI) or **Locked,disabled** (ETSI).

Step 7 Return to your originating procedure (NTP).

DLP-G82 Verify the OSC-CSM Power

Purpose	This task verifies OSC-CSM card.
Tools/Equipment	None
Prerequisite Procedures	DLP-G46 Log into CTC, page 2-25
Required/As Needed	As needed
Onsite/Remote	Onsite or remote
Security Level	Superuser only

Step 1 Display the OSC-CSM card in card view.

Step 2 Click the **Provisioning > Optical Line > Parameters** tabs.

Step 3 Verify the Port 3 power value (Out Com) is higher than the default no-power value of –30 dBm. The expected value on Port 3 should be one of the following:

- If an OPT-PRE amplifier is not installed on the east side: Pout tunable laser – IL02 east OSC-CSM (LINE RX > COM TX) – IL02 OSC-CSM-W (COM RX > LINE TX) –10 dB (bulk attenuator)
- If an OPT-PRE amplifier is installed on the east side: Pout COM TX of east OPT-PRE (2 dBm) – IL02 west OSC-CSM (COM RX > LINE TX) – 10 dB (bulk attenuator)

Note Actual output power is affected by many factors. Always consider the calculated expected power to be a general guideline and not a precise value.

Step 4 Return to your originating procedure (NTP).

DLP-G83 Verify the OSC-CSM Power—OADM Nodes

Purpose	This task verifies OSC-CSM card.
Tools/Equipment	None
Prerequisite Procedures	DLP-G46 Log into CTC, page 2-25
Required/As Needed	As needed
Onsite/Remote	Onsite or remote
Security Level	Superuser only

Step 1 Display the OSC-CSM card in card view.

Step 2 Click the **Provisioning > Optical Line > Parameters** tabs.

Step 3 Change the Admin State for Port 1 to **OOS,MT/Locked,maintenance**.

Step 4 Verify that the Power value for Port 3 is higher than the default no-power value of –30 dBm. The calculated expected power value for Port 3 is:

Pout COM TX of last AD-xy-xx.x – IL02 OSC-CSM (COM RX > LINE TX) – 10 dB (bulk attenuator)

Step 5 Double-check the value.

Note Actual output power is affected by many factors. Always consider the calculated expected power to be a general guideline and not a precise value.

Step 6 Return to your originating procedure (NTP).

DLP-G84 Verify the OSC-CSM Incoming Power

Purpose	This task verifies OSC-CSM card incoming power.
Tools/Equipment	None
Prerequisite Procedures	DLP-G46 Log into CTC, page 2-25
Required/As Needed	As needed
Onsite/Remote	Onsite or remote
Security Level	Superuser only

Step 1 Display the OSC-CSM card in card view.

Step 2 Click the **Provisioning > Optical Line > Parameters** tabs.

Step 3 Verify that the Power value for Port 2 is higher than the default no-power value of –30 dBm. The calculated expected power value for Port 2 is:

Pout COM TX of OPT-PRE + 2 dBm

Note Actual output power is affected by many factors. Always consider the calculated expected power to be a general guideline and not a precise value.

Step 4 Return to your originating procedure (NTP).

DLP-G85 Verify Express Channel Connections—OADM Node with OSCM Cards

Purpose	This task verifies the express channel connections during an OADM node acceptance.
Tools/Equipment	None
Prerequisite Procedures	DLP-G46 Log into CTC, page 2-25
Required/As Needed	As needed
Onsite/Remote	Onsite or remote
Security Level	Superuser only

Step 1 Set the output power on the tunable laser to a nominal value, such as –3 dBm, and connect it to the east OPT-BST LINE RX port.

Step 2 Based on the Cisco MetroPlanner site configuration file, tune the tunable laser to a wavelength (on the 100-GHz ITU-T grid) that runs on the express path of all AD-xB-xx.x and AD-xC-xx.x cards on the east-to-west and west-to-east directions.

Step 3 If an OPT-PRE card is installed on the east side, insert a 10-dB bulk attenuator on the COM RX port and complete the "DLP-G80 Verify the OPT-PRE Amplifier Laser and Power" task on page 4-23. If an OPT-PRE card is not installed on the east side, continue with Step 4.

Step 4 If AD-xB-xx.x cards are installed on the east side, complete the "DLP-G87 Verify the AD-xB-xx.x Output Express Power" task on page 4-28 for each card. If not, continue with Step 5.

Note If AD-xB-xx.x and AD-xC-xx.x cards are both installed in one direction, the band signal is dropped first, then the channel signal.

Step 5 If AD-xC-xx.x cards are installed on the east side, complete the "DLP-G88 Verify the AD-xC-xx.x Output Express Power" task on page 4-28 for each east side card. If not, continue with Step 6.

Step 6 If AD-xC-xx.x cards are installed on the west side, complete the "DLP-G88 Verify the AD-xC-xx.x Output Express Power" task on page 4-28 for each west side card. If not, continue with Step 7.

Step 7 If AD-xB-xx.x cards are installed on the west side, complete the "DLP-G87 Verify the AD-xB-xx.x Output Express Power" task on page 4-28 for each west side card. If not, continue with Step 8.

Step 8 Complete the "DLP-G79 Verify the OPT-BST Amplifier Laser and Power" task on page 4-22 for the OPT-BST installed on the east side.

Step 9 If an OPT-PRE card is installed on the west side, complete the "DLP-G80 Verify the OPT-PRE Amplifier Laser and Power" task on page 4-23. If an OPT-PRE card is not installed, continue with Step 10.

Step 10 Repeat Steps 1 through 9 to the AD-xB-xx.x and AD-xC-xx.x cards along the west-to-east direction.

Step 11 Complete the "DLP-G79 Verify the OPT-BST Amplifier Laser and Power" task on page 4-22 for the OPT-BST installed on the west side.

Step 12 Return to the originating procedure (NTP).

DLP-G86 Verify Express Channel Connections—OADM Node with OSC-CSM Cards

Purpose	This task verifies the express channel connections during an OADM node acceptance.
Tools/Equipment	None
Prerequisite Procedures	DLP-G46 Log into CTC, page 2-25
Required/As Needed	As needed
Onsite/Remote	Onsite or remote
Security Level	Superuser only

Step 1 Set the output power on the tunable laser to a nominal value, such as –3 dBm, and connect it to the LINE RX port of the east OSC-CSM card.

Step 2 If an OPT-PRE amplifier card is installed on the east side, install a 10-dB bulk attenuator on the COM RX port.

Step 3 Based on the Cisco MetroPlanner site configuration file, tune the tunable laser on a wavelength (belonging to the 100-GHz ITU-T grid) running on the express path of all AD-xB-xx.x and AD-xC-xx.x cards on the east-to-west direction.

Step 4 Complete the "DLP-G80 Verify the OPT-PRE Amplifier Laser and Power" task on page 4-23 for the OPT-PRE amplifier card installed on the west side.

Step 5 If AD-xB-xx.x cards are installed on the east side, complete the "DLP-G87 Verify the AD-xB-xx.x Output Express Power" task on page 4-28 for each east side card. If not, continue with Step 6.

Note If Ad-xB-xx.xand AD-xC cards are both installed in one direction, the band signal is dropped first, then the channel signal.

Step 6 If AD-xC-xx.x cards are installed on the east side, complete the "DLP-G88 Verify the AD-xC-xx.x Output Express Power" task on page 4-28 for each east side card. If not, continue with Step 7.

Step 7 If AD-xC-xx.x cards are installed on the west side, complete the "DLP-G88 Verify the AD-xC-xx.x Output Express Power" task on page 4-28 for each west side card. If not, continue with Step 8.

Step 8 If AD-xB-xx.x cards are installed on the west side, complete the "DLP-G87 Verify the AD-xB-xx.x Output Express Power" task on page 4-28 for each west side card. If not, continue with Step 9.

Step 9 Complete the "DLP-G83 Verify the OSC-CSM Power—OADM Nodes" task on page 4-25 for the OSC-CSM installed on the west side.

Step 10 Complete the "DLP-G80 Verify the OPT-PRE Amplifier Laser and Power" task on page 4-23 for the OPT-PRE card installed on the east side.

Step 11 Repeat Steps 1 through 10 to the AD-xB-xx.x and AD-xC-xx.x cards along the west-to-east direction.

Step 12 Complete the "DLP-G83 Verify the OSC-CSM Power—OADM Nodes" task on page 4-25 for the OSC-CSM installed on the east side.

Step 13 Return to the originating procedures (NTPs).

DLP-G87 Verify the AD-xB-xx.x Output Express Power

Purpose	This task verifies the output express power of Band OADM (AD-xB-xx.x) cards.
Tools/Equipment	None
Prerequisite Procedures	DLP-G46 Log into CTC, page 2-25
Required/As Needed	As needed
Onsite/Remote	Onsite or remote
Security Level	Superuser only

Step 1 Display the AD-xB-xx.x in card view.

Step 2 Click the **Provisioning > Optical Line > Parameters** tabs.

Step 3 Change the Output Express port Admin State to **OOS,MT/Locked,maintenance**. Click **Apply**.

Step 4 Verify that the Output Express port Power value is greater than the default no-power value of –28 dBm.

Step 5 Return to your originating procedure (NTP).

DLP-G88 Verify the AD-xC-xx.x Output Express Power

Purpose	This task verifies the output express power of the Channel OADM (AD-xC-xx.x) cards.
Tools/Equipment	None
Prerequisite Procedures	DLP-G46 Log into CTC, page 2-25
Required/As Needed	As needed
Onsite/Remote	Onsite or remote
Security Level	Superuser only

Step 1 Display the AD-xC-xx.x in card view.

Step 2 Click the **Provisioning > Optical Line > Parameters** tabs.

Step 3 Change the Output Express port Admin State to **OOS,MT/Locked,maintenance**. Click **Apply**.

Step 4 Verify that the Output Express port Power value is greater than the default no-power value of –30 dBm.

Step 5 Return to your originating procedure (NTP).

DLP-G89 Verify OADM Node Pass-Through Channel Connections

Purpose	This task verifies the pass-through channel connections during an OADM node acceptance test.
Tools/Equipment	None
Prerequisite Procedures	DLP-G46 Log into CTC, page 2-25
Required/As Needed	As needed
Onsite/Remote	Onsite or remote
Security Level	Superuser only

Step 1 Identify the first band connection configured in pass-through mode in both directions.

Step 2 Tune the tunable laser to the wavelength of the band to be tested.

Step 3 Complete the "DLP-G90 Verify an AD-xB-xx.x Pass-Through Connection Power" task on page 4-30 for the first pass-through connection.

Step 4 (Optional.) Complete one of the following:

- If OSCM cards are installed, connect a power meter to the east OPT-BST LINE TX port and verify that the east amplifier is turned on by the pass-through wavelength.
- If OSC-CSM cards are installed, complete the "DLP-G84 Verify the OSC-CSM Incoming Power" task on page 4-25 for the east OSC-CSM card.

Step 5 Complete Steps 2 through 4 for all band connections configured in pass-through mode in both directions.

Step 6 Test the pass-through channel connections:

- If the pass-through channel connections use an AD-xC-xx.x card, continue with Step 7.
- If pass-through channel connections use a 4MD-xx.x card, continue with Step 11.

Step 7 Tune the tunable laser on a wavelength (1 of 4) belonging to the channel to be tested.

Step 8 Complete the "DLP-G91 Verify an AD-xC-xx.x Pass-Through Connection" task on page 4-31 for the first pass-through connection.

Step 9 (Optional.) Complete one of the following:

- If an OSCM card is installed, connect a power meter to LINE TX port on the front-pane and verify that the east OPT-BST amplifier is turned on by the pass-through wavelength.
- If an OSC-CSM card is installed, complete the "DLP-G84 Verify the OSC-CSM Incoming Power" task on page 4-25 for the east OSC-CSM card.

Step 10 If the pass-through connections use a 4-channel multiplexer/demultiplexer (4MD-xx.x), continue with Step 11. If not, continue with Step 15.

Step 11 Identify the first channel connection that is configured in pass-through mode using the 4MD-xx.x cards in both directions.

Step 12 Tune the tunable laser on the corresponding wavelength.

Step 13 Complete the "DLP-G92 Verify an 4MD-xx.x Pass-Through Connection Power" task on page 4-32.

Step 14 (Optional.) Perform one of the following:

- If an OSCM card is installed, connect a power meter to LINE TX port on the card front panel and verify that the east OPT-BST amplifier is turned on by the pass-through wavelength.
- If an OSC-CSM card is installed, complete the "DLP-G84 Verify the OSC-CSM Incoming Power" task on page 4-25 for the east OSC-CSM card.

Step 15 Return to your originating procedure (NTP).

DLP-G90 Verify an AD-xB-xx.x Pass-Through Connection Power

Purpose	This task verifies an AD-xB-xx.x pass-through connection.
Tools/Equipment	None
Prerequisite Procedures	DLP-G46 Log into CTC, page 2-25
Required/As Needed	As needed
Onsite/Remote	Onsite or remote
Security Level	Superuser only

Step 1 Verify the east AD-xB-xx.x band TX power:

a. Display the east AD-xB-xx.x in card view.

b. Click the **Provisioning > Optical Band > Parameters** tabs.

c. Change the Admin State of the BAND TX (east-to-west) port related to the wavelength selected on the tunable laser to **OOS,MT/Locked,maintenance**. Click **Apply**.

d. Verify that the BAND TX port Power value is higher than the default no-power value of –30 dBm.

Step 2 Verify the west AD-xB-xx.x card RX and TX power:

a. Display the west AD-xB-xx.x card (corresponding to the east AD-xB-xx.x in Step 1) in card view.

b. Click the **Provisioning > Optical Band > Parameters** tabs.

c. Verify that the Power value of the BAND RX (east-to-west) port is higher than the default no-power value of –30 dBm.

d. Change the Admin State of the BAND TX (west-to-east) port related to the wavelength selected on the tunable laser to **OOS,MT/Locked,maintenance**. Click **Apply**.

e. Verify that the BAND TX port Power value is higher than the default no-power value of –30 dBm.

Step 3 Verify the band RX port on the east AD-xB-xx.x card:

a. Display the east AD-xB-xx.x in card view.

b. Click the **Provisioning > Optical Band > Parameters** tabs.

c. Verify that the Power value of the BAND RX (West to East) port is higher than the default no-power value of –30 dBm.

Step 4 Return to your originating procedure (NTP).

DLP-G91 Verify an AD-xC-xx.x Pass-Through Connection

Purpose	This task verifies an AD-xC-xx.x pass-through connection.
Tools/Equipment	None
Prerequisite Procedures	DLP-G46 Log into CTC, page 2-25
Required/As Needed	As needed
Onsite/Remote	Onsite or remote
Security Level	Superuser only

Step 1 Verify the east AD-xC-xx.x channel TX power:

a. Display the east AD-xC-xx.x in card view.

b. Click the **Provisioning > Optical Chn > Parameters** tabs.

c. Verify that the power value for the CHAN TX port is higher than the default no-power value of –35 dBm.

d. If the AD-xC-xx.x card is an AD-4C-xx.x card, a VOA (applied to all four channels) is installed along the drop path and needs to be configured.

e. Change the Admin State of the CHAN TX port related to the wavelength selected on the tunable laser to **OOS,MT/Locked,maintenance**. Click **Apply**.

f. Perform the output power check.

Step 2 Verify the channel power for the corresponding west AD-xC-xx.x card:

a. Display the west AD-xC-xx.x card in card view.

b. Click the **Provisioning > Optical Chn > Parameters** tabs.

c. Change the Admin State of the CHAN RX port related to the wavelength selected on the tunable laser to **OOS,MT/Locked,maintenance**. Click **Apply**.

d. Verify that the Power value of the CHAN RX port reaches the provisioned setpoint (VOA Power Ref).

e. Change the Admin State of the CHAN TX port related to the wavelength selected on the tunable laser to **OOS,MT/Locked,maintenance**. Click **Apply**.

f. If the AD-xC-xx.x is an AD-4C-W card, a VOA (applying to all four channels) is installed along the drop path and needs to be configured.

g. Change the Admin State of the CHAN TX port related to the wavelength selected on the tunable laser to **OOS,MT/Locked,maintenance**. Click **Apply**.

h. Perform the output power check.

Step 3 Verify the band RX port on the east AD-xB-xx.x card:

a. Display the east AD-xB-xx.x in card view.

b. Click the **Provisioning > Optical Band > Parameters** tabs.

c. Change the Admin State of the CHAN RX port to **OOS,MT/Locked,maintenance** for the channel related to the wavelength selected on the tunable laser.

d. Verify that the Power value of the BAND RX port reaches the provisioned setpoint (VOA Power Ref).

Step 4 Return to your originating procedure (NTP).

DLP-G92 Verify an 4MD-xx.x Pass-Through Connection Power

Purpose	This task verifies an 4MD-xx.x pass-through connection.
Tools/Equipment	None
Prerequisite Procedures	DLP-G46 Log into CTC, page 2-25
Required/As Needed	As needed
Onsite/Remote	Onsite or remote
Security Level	Superuser only

Step 1 Verify the TX band power on the related east AD-xB-xx.x card:

a. Display the east AD-xB-xx.x card in card view.

b. Click the **Provisioning > Optical Band > Parameters** tabs.

c. Change the Admin State of the BAND TX port to **OOS,MT/Locked,maintenance** for the channel related to the wavelength selected on the tunable laser.

d. Verify that the BAND TX Power value is higher than the default no-power value of –30 dBm.

Step 2 Verify the TX power on the related east 4MD-xx.x (east-to-west) card:

a. Display the east 4MD-xx.x card in card view.

b. Click the **Provisioning > Optical Chn > Parameters** tabs.

c. Verify that the Power value on the CHAN TX port is higher than the default no-power value of –35 dBm.

d. Change the Admin State of the CHAN RX port to **OOS,MT/Locked,maintenance** for the channel related to the wavelength selected on the tunable laser.

Step 3 Verify the west 4MD-xx.x (east-to-west):

a. Display the west 4MD-xx.x card in card view.

b. Click the **Provisioning > Optical Chn > Parameters** tabs.

c. Change the Admin State of the CHAN RX port to **OOS,MT/Locked,maintenance** for the channel related to the wavelength selected on the tunable laser.

d. Verify that the Power value of the CHAN RX port reaches the provisioned setpoint (VOA Power Ref).

Step 4 Verify the west AD-xB-xx.x (west-to-east):

a. Display the west 4MD-xx.x card in card view.

b. Click the **Provisioning > Optical Band > Parameters** tabs.

c. Change the Admin State of the BAND TX port to **OOS,MT/Locked,maintenance** for the channel related to the wavelength selected on the tunable laser.

d. Verify that the BAND TX Power value is higher than the default no-power value of –30 dBm.

Step 5 Verify the west 4MD-xx.x (west-to-east):

a. Display the west 4MD-xx.x card in card view.

b. Click the **Provisioning > Optical Chn > Parameters** tabs.

c. Verify that the Power value on the CHAN TX port is higher than the default no-power value of –35 dBm.

Step 6 Verify the east 4MD-xx.x (west-to-east):

a. Display the east 4MD-xx.x card in card view.

b. Click the **Provisioning > Optical Chn > Parameters** tabs.

c. Change the Admin State of the CHAN RX port to **OOS,MT/Locked,maintenance** for the channel related to the wavelength selected on the tunable laser.

d. Verify that the Power value of the CHAN RX port reaches the provisioned setpoint (VOA Power Ref).

Step 7 Return to your originating procedure (NTP).

DLP-G93 Verify Add and Drop Connections on OADM Node with OSCM Card

Purpose	This task verifies the add and drop channel connections for an OADM node with OSCM cards installed.
Tools/Equipment	None
Prerequisite Procedures	DLP-G46 Log into CTC, page 2-25
Required/As Needed	As needed
Onsite/Remote	Onsite or remote
Security Level	Superuser only

Note In this task, you will verify add and drop connections in the following order: east-to-west add and west-to-east drop, Steps 1 through 15; west-to-east add and east-to-west drop, Steps 16 through 17

Step 1 From the Cisco MetroPlanner site configuration file, identify the wavelength (belonging to the 100-GHz ITU-T grid) of the channel running on the first add path of the first west AD-xC-xx.x or west 4MD-xx.x card on the east-to-west direction.

Step 2 Connect the tunable laser to the corresponding 15xx.x RX port (on the card front panel) of the west AD-xC-xx.x or 4MD-xx.x card.

Step 3 Verify the west AD-xC-xx.x or 4MD-xx.x (east-to-west):

a. Display the west AD-xC-xx.x or 4MD-xx.x card in card view.

b. Click the **Provisioning > Optical Chn > Parameters** tabs.

c. Change the Admin State of the CHAN RX port to **OOS,MT/Locked,maintenance** for the channel related to the wavelength chosen on the tunable laser.

d. Verify that the Power value of the CHAN RX port reaches the provisioned setpoint (VOA Power Ref).

Step 4 Complete the "DLP-G79 Verify the OPT-BST Amplifier Laser and Power" task on page 4-22 on the west OPT-BST amplifier to verify that the added wavelength turns on the laser.

Step 5 If the add connection uses a 4MD-xx.x card, continue with Step 6. If the add connection uses an AD-xC-xx.x card, move to Step 10.

Step 6 Verify the west AD-xB-xx.x:

a. Display the west AD-xB-xx.x card in card view.

b. Click the **Provisioning > Optical Band > Parameters** tabs.

c. Change the Admin State of the BAND TX port to **OOS,MT/Locked,maintenance** for the channel related to the wavelength selected on the tunable laser.

d. Verify that the Power value of the BAND TX port is higher than the default no-power value of –30 dBm.

Step 7 Display the related AD-xB-xx.x card (west-to-east direction) in card view.

Step 8 Change the admin state of the drop BAND TX port related to the wavelength selected on the tunable laser to OOS,MT.

Step 9 (Optional.) Connect a power meter to the proper 15xx.x TX port on the front panel (the dual port compared with the port where the tunable laser is connected). Verify that the physical optical power value from that port is consistent with the value displayed on the Provisioning > Optical Chn > Parameters tab for the proper CHAN TX power value +/– 0.5 dB.

Step 10 Verify the west AD-xC-xx.x (west-to-east) card:

a. Display the west AD-xC-xx.x card in card view.

b. Click the **Provisioning > Optical Chn > Parameters** tabs.

c. Verify that the Power value of the CHAN TX port is higher than the default no-power value of –35 dBm.

a. Display the east AD-xC-xx.x in card view.

b. Click the **Provisioning > Optical Chn > Parameters** tabs.

c. Verify that the power value for the CHAN TX port is higher than the default no-power value of –35 dBm.

d. If the AD-xC-xx.x card is an AD-4C-xx.x card, a VOA (applied to all four channels) is installed along the drop path and needs to be configured.

e. Change the Admin State of the CHAN TX port related to the wavelength selected on the tunable laser to **OOS,MT/Locked,maintenance**. Click **Apply**.

f. Perform the output power check.

Step 11 (Optional.) Connect a power meter to the proper 15xx.xx TX port on the front panel (the dual port compared with the port where the tunable laser is connected). Verify that the physical optical power value from that port is consistent with the value on the Provisioning > Optical Chn > Parameters tab for the proper CHAN TX power value +/– 0.5 dB.

Step 12 Repeat Steps 6 through 11 for all add paths of any west AD-xC-xx.x or 4MD-xx.x cards along the east-to-west direction.

Step 13 Remove the loopback on the west OPT-BST amplifier and create a loopback on the east OPT-BST amplifier.

Step 14 If an OPT-PRE amplifier is installed on the east side, remove the 10-dB bulk attenuator inserted on the COM RX port.

Note An SDCC Termination Failure alarm might appear during to the OSC signal loopback.

If the OSC link does not turn up, perform the following steps:

a. Display the OPT-BST card in card view.

b. Click the **Provisioning > Optical Line > Optics Thresholds** tabs.

c. Set the Power Low value of Port 6 to –40 dBm.

d. If the OSC link does not appear, disconnect the OSCM card from the OPT-BST amplifier.

e. Create a loopback by attaching a patch cord to the OSC TX and OSC RX ports on the front panel of the OSCM card using a 10-dB bulk attenuator.

f. If the OSC link turns up, replace the OPT-BST amplifier card.

g. If the OSC link does not turn up, replace the OSCM card.

Step 15 Check the site configuration file from Cisco MetroPlanner and identify the wavelength (belonging to the 100 Ghz ITU-T grid) of the channel running on the first add path of the first AD-xC-xx.x-E or 4MD-xx.x-E card on the west-to-east direction.

Step 16 Connect the tunable laser to the correspondent 15xx.x RX port (on the card front panel) of the east AD-xC-xx.x-E or east 4MD-xx.x-E card.

Step 17 Repeat Steps 3 through 16, applying the steps to the west-to-east direction.

Step 18 Restore the default admin state (IS,AINS/Unlocked,automaticInService) on all the ports previously set to OOS,MT/Locked,maintenance.

Step 19 Launch ANS to recover the correct Node Configuration.

Step 20 Return to your originating procedure (NTP).

DLP-G94 Verify Add and Drop Connections on OADM Node with OSC-CSM Card

Purpose	This task verifies the add and drop channel connections for an OADM node with OSC-CSM cards installed.
Tools/Equipment	None
Prerequisite Procedures	DLP-G46 Log into CTC, page 2-25
Required/As Needed	As needed
Onsite/Remote	Onsite or remote
Security Level	Superuser only

Note In this task, you will verify add and drop connections in the following order: east-to-west and west-to-east drop: Steps 1 through 15; west-to-east add and east-to-west drop: Steps 16 through 17

Step 1 From the Cisco MetroPlanner site configuration file, identify the wavelength (belonging to the 100-GHz ITU-T grid) of the channel running on the first add path of the first west AD-xC-xx.x or west 4MD-xx.x card on the east-to-west direction.

Step 2 Connect the tunable laser to the corresponding 15xx.x RX port (on the card front panel) of the west AD-xC-xx.x or 4MD-xx.x card.

Step 3 Verify the west AD-xC-xx.x or 4MD-xx.x (east-to-west):

a. Display the west AD-xC-xx.x or 4MD-xx.x card in card view.

b. Click the **Provisioning > Optical Chn > Parameters** tabs.

c. Change the Admin State of the CHAN RX port to **OOS,MT/Locked,maintenance** for the channel related to the wavelength selected on the tunable laser.

d. Verify that the Power value of the CHAN RX port reaches the provisioned setpoint (VOA Power Ref).

Step 4 Complete the "DLP-G80 Verify the OPT-PRE Amplifier Laser and Power" task on page 4-23 on the west OPT-PRE amplifier to verify that the added wavelength turns on the laser.

Step 5 If the add connection uses a 4MD-xx.x card, continue with Step 6. If the add connection uses an AD-xC-xx.x card, move to Step 10.

Step 6 Verify the west AD-xB-xx.x:

a. Display the west AD-xB-xx.x card in card view.

b. Click the **Provisioning > Optical Band > Parameters** tabs.

c. Change the Admin State of the BAND TX port to **OOS,MT/Locked,maintenance** for the channel related to the wavelength selected on the tunable laser.

d. Verify that the Power value of the BAND TX port is higher than the default no-power value of –30 dBm.

Step 7 Display the related AD-xB-xx.x card (west-to-east direction) in card view.

Step 8 Change the admin state of the drop BAND TX port related to the wavelength selected on the tunable laser to OOS,MT.

Step 9 (Optional.) Connect a power meter to the proper 15xx.xs TX port on the front panel (the dual port compared with the port where the tunable laser is connected). Verify that the physical optical power value from that port is consistent with the value displayed on the Provisioning > Optical Chn > Parameters tab for the proper CHAN TX power value +/– 0.5 dB.

Step 10 Verify the west AD-xC-xx.x (west-to-east) card:

a. Display the west AD-xC-xx.x card in card view.

b. Click the **Provisioning > Optical Chn > Parameters** tabs.

c. Verify that the Power value of the CHAN TX port is higher than the default no-power value of –35 dBm.

d. Display the east AD-xC-xx.x in card view.

e. Click the **Provisioning > Optical Chn > Parameters** tabs.

f. Verify that the power value for the CHAN TX port is higher than the default no-power value of –35 dBm.

g. If the AD-xC-xx.x card is an AD-4C-xx.x card, a VOA (applied to all four channels) is installed along the drop path and needs to be configured.

h. Change the Admin State of the CHAN TX port related to the wavelength selected on the tunable laser to **OOS,MT/Locked,maintenance**. Click **Apply**.

i. Perform the output power check.

Step 11 (Optional.) Connect a power meter to the proper 15xx.xx TX port on the front panel (the dual port compared with the port where the tunable laser is connected). Verify that the physical optical power value from that port is consistent with the value on Provisioning > Optical Chn > Parameters tab for the proper CHAN TX power value +/– 0.5 dB.

Step 12 Repeat Steps 6 through 11 for all add paths of any west AD-xC-xx.x or 4MD-xx.x cards along the east-to-west direction.

Step 13 Remove the loopback on the west OSC-CSM.

Step 14 In node view, click the **Provisioning > WDM-ANS > Port Status** tabs.

Step 15 Click **Launch ANS**.

Step 16 Create a loopback on the east OSC-CSM card by connecting the OSC-CSM LINE RX and LINE TX ports using a patch cord and 10-dB bulk attenuator.

Step 17 Verify that the OSC link becomes active on the west OSC-CSM card. (The OSC termination must be already provisioned. If not, complete the "DLP-G75 Create OSC Terminations" task on page 3-61.)

Note Due to the OSC signal loopback, a SDCC Termination Failure alarm might be raised.

Step 18 If the OSC link becomes active, continue with Step 19. If the OSC link does not turn up, perform the following troubleshooting steps:

- **a.** Remove the 10-dB bulk attenuator between the LINE TX and LINE RX connection. If the OSC link becomes active, continue with Step 19. If not, continue with Step b.
- **b.** Modify the OSC Fail Low thresholds. Click the **Provisioning > Optical Line > Optics Thresholds** tabs and change the Port 6 opwrMin (minimum power) to –40 dBm.
- **c.** Modify the COM TX Fail Low Threshold. Change the Port 3 opwrMin (minimum power) to –30 dBm.
- **d.** If the OSC link turns up, continue with Step 19. If it does not turn up, replace the OSC-CSM card.

Step 19 Check the site configuration file from Cisco MetroPlanner and identify the wavelength (belonging to the 100 Ghz ITU-T grid) of the channel running on the first add path of the first AD-xC-xx.x-E or 4MD-xx.x-E card on the west-to-east direction.

Step 20 Connect the tunable laser to the correspondent 15xx.x RX port (on the card front panel) of the east AD-xC-xx.x-E or east 4MD-xx.x-E card.

Step 21 Repeat Steps 3 through 20, applying the steps to the west-to-east direction.

Step 22 Restore the default admin state (IS,AINS/Unlocked,automaticInService) on all the ports previously set to OOS,MT/Locked,maintenance.

Step 23 Launch ANS to recover the correct node configuration.

Step 24 Return to your originating procedure (NTP).

Turn Up Network

This chapter explains how to turn up and test a Cisco ONS 15454 dense wavelength division multiplexing (DWDM) network. For DWDM topology reference information and span loss tables, refer to Chapter 16, "DWDM Network Reference."

There are two main DWDM network types, metro core, where the channel power is equalized and dispersion compensation is applied, and metro access, where the channels are not equalized and dispersion compensation is not applied. Metro core networks often include multiple spans and amplifiers, thus making optical signal-to-noise ratio (OSNR) the limiting factor for channel performance. Metro access networks often include a few spans with very low span loss; therefore, the signal link budget is the limiting factor for performance. The DWDM network topologies supported are hubbed rings, multihubbed rings, meshed rings, linear configurations, and single-span links.

The DWDM node types supported are hub, terminal, optical add/drop multiplexing (OADM), reconfigurable optical add/drop multiplexing (ROADM) anti-amplified spontaneous emissions (ASE), and line amplifier. For DWDM and hybrid node turn up procedures, see Chapter 3, "Turn Up a Node."

Note Unless otherwise specified, "ONS 15454" refers to both ANSI and ETSI shelf assemblies.

Before You Begin

This section lists the chapter procedures (NTPs). Turn to a procedure for applicable tasks (DLPs).

1. NTP-G51 Verify DWDM Node Turn Up, page 5-2—Complete this procedure before beginning network turn up.
2. NTP-G52 Verify Node-to-Node Connections, page 5-3—Complete this procedure next.
3. NTP-G53 Set Up Timing, page 5-4—Complete this procedure next.
4. NTP-G54 Provision and Verify a DWDM Network, page 5-7—Complete this procedure next.
5. NTP-G55 Verify the Optical Receive Power, page 5-13—Complete this procedure next.
6. NTP-G56 Verify the OSNR, page 5-14—Complete as needed.
7. NTP-G57 Create a Logical Network Map, page 5-15—Complete as needed.

NTP-G51 Verify DWDM Node Turn Up

Purpose	This procedure verifies that each ONS 15454 is ready for DWDM network turn up before adding nodes to a network.
Tools/Equipment	None
Prerequisite Procedures	Chapter 3, "Turn Up a Node"
Required/As Needed	Required
Onsite/Remote	Onsite
Security Level	Provisioning or higher

Step 1 Log into an ONS 15454 on the network that you will test. See the "DLP-G46 Log into CTC" task on page 2-25. If you are already logged in, proceed to Step 2.

Step 2 Click the **Alarms** tab.

a. Verify that the alarm filter is not turned on. See the "DLP-G128 Disable Alarm Filtering" task on page 7-32 as necessary.

b. Verify that no unexplained alarms appear. If alarms appear, investigate and resolve them before continuing. Refer to the *Cisco ONS 15454 SONET and DWDM Troubleshooting Guide* for procedures.

Step 3 Verify that the software version and defaults shown in the node view status area match the software version and NE defaults shown in your site plan. If either is not correct, complete the following procedures as needed:

- If the software is not the correct version, install the correct version from the ONS 15454 software CD. Upgrade procedures are located in the release-specific software upgrade document. Follow the upgrade procedures appropriate to the software currently installed on the node. TCC2 cards can also be ordered with the latest software release.
- If the node defaults are not correct, import the network element defaults. Refer to the *Cisco ONS 15454 Network Element Defaults* publication for Software R4.7.

Step 4 Click the **Provisioning > General** tabs. Verify that all general node information settings match the settings of your site plan. If not, see the "NTP-G80 Change Node Management Information" procedure on page 9-8.

Step 5 Click the **Provisioning > Network** tabs. Ensure that the IP settings and other Cisco Transport Controller (CTC) network access information is correct. If not, see the "NTP-G81 Change CTC Network Access" procedure on page 9-10.

Step 6 Click the **Provisioning > Protection** tabs. Verify that all protection groups have been created according to your site plan. If not, see the "NTP-G83 Modify or Delete Card Protection Settings" procedure on page 9-20.

Step 7 Click the **Provisioning > Security** tabs. Verify that all users have been created and that their security levels match the settings indicated by your site plan. If not, see the "NTP-G88 Modify Users and Change Security" procedure on page 9-34.

Step 8 If Simple Network Management Protocol (SNMP) is provisioned on the node, click the **Provisioning > SNMP** tabs. Verify that all SNMP settings match the settings of your site plan. If not, see the "NTP-G89 Change SNMP Settings" procedure on page 9-42.

Step 9 Provision the network connections using the "NTP-G52 Verify Node-to-Node Connections" procedure on page 5-3.

Stop. You have completed this procedure.

NTP-G52 Verify Node-to-Node Connections

Purpose	This procedure verifies OSC terminations between nodes and checks span attenuation.
Tools/Equipment	None
Prerequisite Procedures	NTP-G51 Verify DWDM Node Turn Up, page 5-2
Required/As Needed	Required
Onsite/Remote	Onsite
Security Level	Provisioning or higher

Step 1 Verify the network fiber connections. The east ports (LINE TX and LINE RX) of one node must connect to the west ports (LINE RX and LINE TX respectively) of the adjacent node. If fibers are missing or incorrectly connected, make the correct connections. See the "NTP-G34 Install Fiber-Optic Cables on DWDM Cards" procedure on page 3-35 for instructions.

Step 2 Complete the "DLP-G46 Log into CTC" task on page 2-25 at a network node.

Step 3 Click the **Provisioning > Comm Channels > OSC** tab. Verify that OSC terminations were created for the east and west OSC-CSM or OSCM cards and the port state is In-Service and Normal (IS-NR [ANSI])/Unlocked-enabled (ETSI). If so, continue with Step 5. If OSC terminations are not created, complete the "DLP-G75 Create OSC Terminations" task on page 3-61.

Step 4 Repeat Step 3 at each network node.

Step 5 Complete the "DLP-G155 Verify Optical Span Loss Using CTC" task on page 9-3.

Step 6 If the measured span loss is within the minimum and maximum expected span loss values, continue with the next step. If the measured span loss values are not within the minimum and maximum range, complete the "NTP-G115 Clean Fiber Connectors" procedure on page 11-32, then repeat Step 5. If necessary, complete the "DLP-G156 Measure Span Insertion Loss Using an OTDR" task on page 9-4 to provide a more accurate measurement.

Step 7 Repeat Step 5 at each network node.

Stop. You have completed this procedure.

NTP-G53 Set Up Timing

Purpose	This procedure provisions the ONS 15454 timing.
Tools/Equipment	None
Prerequisite Procedures	NTP-G51 Verify DWDM Node Turn Up, page 5-2
Required/As Needed	Required
Onsite/Remote	Onsite or remote
Security Level	Provisioning or higher

Step 1 Complete the "DLP-G46 Log into CTC" task on page 2-25 at the node where you will set up timing. If you are already logged in, continue with Step 2.

Step 2 Complete the "DLP-G95 Set Up External or Line Timing" task on page 5-4 if an external building integrated timing supply (BITS) source is available. This is the common ONS 15454 timing setup procedure.

Step 3 If you cannot complete Step 2 (an external BITS source is not available), complete the "DLP-G96 Set Up Internal Timing" task on page 5-6. This task can only provide Stratum 3 timing.

Stop. **You have completed this procedure**.

DLP-G95 Set Up External or Line Timing

Purpose	This task defines the ONS 15454 timing source (external or line).
Tools/Equipment	None
Prerequisite Procedures	DLP-G46 Log into CTC, page 2-25
Required/As Needed	Required
Onsite/Remote	Onsite or remote
Security Level	Provisioning or higher

Step 1 In node view, click the **Provisioning > Timing** tabs.

Step 2 In the General Timing area, complete the following information:

- Timing Mode—Choose **External** if the ONS 15454 derives its timing from a BITS source wired to the backplane pins (ANSI) or a MIC-C/T/P FMEC (ETSI); choose **Line** if timing is derived from an OSC-CSM or OSCM card that is optically connected to the timing node. A third option, Mixed, allows you to set external and line timing references.

  Note Because Mixed timing might cause timing loops, Cisco does not recommend its use. Use this mode with care.

- SSM Message Set—For DWDM nodes, choose the Generation 2 synchronization status messaging (SSM) option. Generation 1 is used only by SONET or SDH ONS 15454s that are connected to equipment that does not support Generation 2.

- Quality of RES—If your timing source supports the reserved S1 byte, set the timing quality here. (Most timing sources do not use RES.) Qualities are displayed in descending quality order as ranges. For example, ST3<RES<ST2 means the timing reference is higher than a Stratum 3 and lower than a Stratum 2. Refer to Chapter 18, "Security and Timing" for more information about SSM, including definitions of the SONET timing levels.
- Revertive—Select this check box if you want the ONS 15454 to revert to a primary reference source after the conditions that caused it to switch to a secondary timing reference are corrected.
- Revertive Time—If Revertive is checked, choose the amount of time the ONS 15454 will wait before reverting to its primary timing source. Five minutes is the default.

Step 3 In the BITS Facilities area, complete the following information:

Note The BITS Facilities section sets the parameters for your BITS-1 and BITS-2 timing references. Many of these settings are determined by the timing source manufacturer. If equipment is timed through BITS Out, you can set timing parameters to meet the requirements of the equipment.

- BITS In State—If Timing Mode is set to External or Mixed, set the BITS In State for BITS-1 and/or BITS-2 to **IS** (in service) depending whether one or both BITS input pin pairs on the backplane (ANSI) or FMEC (ETSI) are connected to the external timing source. If Timing Mode is set to Line, set the BITS In State to **OOS** (out of service).
- BITS Out State—If equipment is connected to the node's BITS output pins on the backplane (ANSI) or FMEC (ETSI) and you want to time the equipment from a node reference, set the BITS Out State for BITS-1 and/or BITS-2 to **IS**, depending on which BITS Out pins are used for the external equipment. If equipment is not attached to the BITS output pins, set the BITS Out State to **OOS**.

Step 4 If the BITS In State for BITS-1 and BITS-2 is set to OOS, continue with Step 5. If the BITS In State is set to IS for either BITS-1 or BITS-2, complete the following information:

- Coding—Set to the coding used by your BITS reference, either B8ZS (binary 8-zero substitution) or AMI (alternate mark inversion).
- Framing—Set to the framing used by your BITS reference, either ESF (Extended Super Frame) or SF (D4) (Super Frame).
- Sync Messaging—Check to enable SSM. SSM is not available if Framing is set to SF (D4).
- AIS Threshold—If SSM is disabled or SF (D4) is used, set the quality level where a node sends an alarm indication signal (AIS) from the BITS-1 Out and BITS-2 Out backplane (ANSI) or FMEC (ETSI) pins. An AIS is raised when the optical source for the BITS reference falls to or below the SSM quality level defined in this field.
- LBO—If you are timing an external device connected to the BITS Out pins, set the distance between the device and the ONS 15454. Options are: 0-133 ft. (default), 124-266 ft., 267-399 ft., 400-533 ft., and 534-655 ft. Line build out (LBO) relates to the BITS cable length.

Step 5 In the Reference Lists area, complete the following information:

Note Reference Lists defines up to three timing references for the node and up to six BITS Out references. BITS Out references define the timing references used by equipment that can be attached to the node's BITS Out pins on the backplane (ANSI) or FMEC (ETSI). If you attach equipment to BITS Out pins, you normally attach it to a node with Line mode because equipment near the external timing reference can be directly wired to the reference.

- NE Reference—Allows you to define three timing references (Ref 1, Ref 2, Ref 3). The node uses Reference 1 unless a failure occurs to that reference, in which case the node uses Reference 2. If Reference 2 fails, the node uses Reference 3, which is typically set to Internal Clock. Reference 3 is the Stratum 3 clock provided on the TCC2 card. The options displayed depend on the Timing Mode setting.
  - If the Timing Mode is set to External, your options are BITS-1, BITS-2, and Internal Clock.
  - If the Timing Mode is set to Line, your options are the node's working OSCM, OSC-CSM, or MXP cards and Internal Clock. Choose the cards/ports that are directly or indirectly connected to the node wired to the BITS source. Set Reference 1 to the card that is closest to the BITS source. For example, if Slot 5 is connected to the node wired to the BITS source, choose Slot 5 as Reference 1.
  - If the Timing Mode is set to Mixed, both BITS and OSC or MXP cards are available, allowing you to set a mixture of external BITS and OSC or MXP cards as timing references.
- BITS-1 Out/BITS-2 Out—Sets the timing references for equipment wired to the BITS Out backplane (ANSI) or FMEC (ETSI) pins. BITS-1 Out and BITS-2 Out are enabled when BITS-1 and BITS-2 facilities are put in service. If Timing Mode is set to external, choose the OSC or MXP card used to set the timing. If Timing Mode is set to Line, you can choose an OSC or MXP card or choose NE Reference to have the BITS-1 Out and/or BITS-2 Out follow the same timing references as the NE.

Note All MXP card client ports are available for timing regardless of the card's termination mode. MXP trunk ports can be a timing reference when G.709 is set to OFF and the Termination Mode is set to LINE.

Step 6 Click **Apply**.

Note Refer to the *Cisco ONS 15454 SONET and DWDM Troubleshooting Guide* for timing-related alarms.

Step 7 Return to your originating procedure (NTP).

DLP-G96 Set Up Internal Timing

Purpose	This task sets up internal timing (Stratum 3) for an ONS 15454.
Tools/Equipment	None
Prerequisite Procedures	DLP-G46 Log into CTC, page 2-25
Required/As Needed	As needed (use only if a BITS source is not available)
Onsite/Remote	Onsite or remote
Security Level	Provisioning or higher

Caution Internal timing is Stratum 3 and not intended for permanent use. All ONS 15454s should be timed to a Stratum 2 or better primary reference source.

Step 1 In node view, click the **Provisioning > Timing** tabs.

Step 2 In the General Timing area, enter the following:

- Timing Mode—Set to **External**.
- SSM Message Set—Set to **Generation 1**.
- Quality of RES—Does not apply to internal timing.
- Revertive—Does not apply to internal timing.
- Revertive Time—Does not apply to internal timing.

Step 3 In the BITS Facilities area, change the BITS In State and BITS Out State to **OOS**. Disregard the other BITS Facilities settings; they are not relevant to internal timing.

Step 4 In the Reference Lists area, enter the following information:

- NE Reference
  - Ref 1—Set to **Internal Clock**.
  - Ref 2—Set to **Internal Clock**.
  - Ref 3—Set to **Internal Clock**.
- BITS-1 Out/BITS-2 Out—Set to **None**.

Step 5 Click **Apply**.

Step 6 Return to your originating procedure (NTP).

NTP-G54 Provision and Verify a DWDM Network

Purpose	This procedure verifies the performance of all cable connections and cards in a network topology. You can also use this procedure to troubleshoot any problems with DWDM network setup.
Tools/Equipment	Test set or protocol analyzer
Prerequisite Procedures	DLP-G46 Log into CTC, page 2-25
Required/As Needed	As needed
Onsite/Remote	Onsite or remote
Security Level	Provisioning or higher

Step 1 Complete the "DLP-G46 Log into CTC" task on page 2-25 to log into an ONS 15454 on the network.

Step 2 Click the **Alarms** tab:

a. Verify that the alarm filter is not turned on. See the "DLP-G128 Disable Alarm Filtering" task on page 7-32 as necessary.

b. Verify that no unexplained conditions appear on the network. If unexplained conditions appear, resolve them before continuing. Refer to the *Cisco ONS 15454 SONET and DWDM Troubleshooting Guide*.

c. Complete the "DLP-G114 Export CTC Data" task on page 7-4 to export alarm and condition information.

Step 3 Review the MetroPlanner file and determine the first channel (ITU wavelength) to be provisioned. Use the transponder, muxponder, or line card that corresponds to the selected wavelength.

Note Provision and measure only one channel.

Step 4 As needed, complete the "DLP-G97 Provision a Proxy Tunnel" task on page 5-10.

Step 5 As needed, complete the "DLP-G98 Provision a Firewall Tunnel" task on page 5-11.

Step 6 As needed, complete the "DLP-G99 Create a Provisionable Patchcord" task on page 5-12.

Step 7 If TXP and MXP cards are installed, provision them according to the MetroPlanner file or according to your site plan. For cards with tunable optical wavelengths, choose the ITU wavelength according to your site plan. For provisioning information, see the following:

- NTP-G96 Modify Line Settings and PM Parameter Thresholds for TXP_MR_10G and TXP_MR_10E Cards, page 10-32
- NTP-G97 Modify Line Settings and PM Parameter Thresholds for MXP_2.5G_10G and MXP_2.5G_10E Cards, page 10-43
- NTP-G98 Modify Line Settings and PM Parameter Thresholds for TXP_MR_2.5G and TXPP_MR_2.5G Cards, page 10-55
- NTP-G99 Modify Line Settings and PM Parameter Thresholds for MXP_MR_2.5G and MXPP_MR_2.5G Cards, page 10-65

Step 8 Create the optical channels according to your site plan. Complete the "DLP-G105 Provision DWDM Optical Channel Network Connections" task on page 6-9.

Note The amplifiers automatically calculate the optical output power to maintain a constant power level on each channel every time a channel is created on the DWDM network. Automatic power control (APC) also starts every 60 minutes. If the span length changes, APC modifies amplifier gains and express variable optical attenuation (VOA). For more information about APC, see the "15.2 Automatic Power Control" section on page 15-14.

Step 9 If OPT-PRE amplifiers are being turned up for the first time:

a. In node view, double-click the OPT-PRE card to open card view.

b. Click the **Provisioning > Opt. Ampli. Line > Parameters** tabs.

c. Verify that the Signal Output Power value for Port 2 is equal to or higher than provisioned set point shown in the Channel Power Ref field. The Total Output Power field includes the ASE noise component.

d. Click the **Maintenance > ALS** tabs and verify that the ALS Mode column displays Auto Restart. Auto Restart is the default Automatic Laser Shutdown (ALS) mode.

e. For each OPT-PRE amplifier that is turned up for the first time on your network, repeat Steps a through d.

Step 10 If OPT-BST amplifiers are being turned up for the first time:

a. In node view, double-click the OPT-BST card to open card view.

b. Click the **Provisioning > Opt. Ampli. Line > Parameters** tabs.

c. Verify that the Signal Output Power field for Port 6 is equal to or higher than the provisioned set point shown in the Channel Power Ref field. The Total Output Power field includes the ASE noise component.

d. Verify that the Working Mode field is the one specified by Cisco MetroPlanner, either control power or control gain. The MetroPlanner parameter is dwdm.rx/tx.amp.WkgModeW/E (rx for OPT-PRE cards; tx for OPT-BST cards). You can view the parameter on the node view Provisioning > WDM-ANS tab.

e. Click the **Maintenance > ALS** tabs and verify that the ALS Mode column displays Auto Restart. Auto Restart is the default ALS mode.

f. For each OPT-BST amplifier that is turned up for the first time on your network, repeat Steps a through e.

Step 11 If OADM nodes have a new circuit running traffic for the first time, check the power values:

Note This step checks the Pin AD Stage (dwdm.[rx/tx].amp.WkgModeW/E) value and the Pout AD Stage (dwdm.rx.power.InAdE/W) value that characterize every OADM node. The ANS function uses these values to make the VOA adjustments.

- If the circuit is terminated inside the node, go to node view and click the **Provisioning > WDM-ANS > Provisioning** tabs. In the Selector area, click **West Pin** field and then **Pin AD Stage**. Verify that the value matches the value for the first OADM card in your circuit heading west to east shown in the COM RX port, ±2 dB. If the values are outside of the error margins, contact Cisco qualified personnel to create another MetroPlanner file or refer to the next level of support.
- If the circuit passes through the node, go to node view and click the **Provisioning > WDM-ANS > Provisioning** tabs. Click **West Pin** field and then **Pin AD Stage**. Verify that the value matches the value for the first OADM card in your circuit heading west to east shown in the COM RX port, ±2 dB. Click **East Pin** and **Pout AD Stage**. Verify the value matches the value for the first OADM card in your circuit heading west to east shown in the COM TX port, ±1 dB. If the values are outside of the error margins, contact Cisco qualified personnel to create another MetroPlanner file or refer to the next level of support.
- If the circuit starts from the node, go to node view and click the **Provisioning > WDM-ANS > Provisioning** tabs. Click **East Pin** field and then **Pin AD Stage**. Verify the value matches the value for the first OADM card in your circuit heading west to east shown in the COM TX port, ±1 dB. If the values are outside of the error margins, contact Cisco qualified personnel to create another MetroPlanner file or refer to the next level of support.

Step 12 Check the received power range:

a. Display the first TXP, MXP, or line card in card view. Complete the "DLP-G136 Clear Selected PM Counts" task on page 8-6.

b. Click the **Performance > Optics PM** tab.

c. Record the values shown in the RX Optical Pwr field.

d. Click the **Provisioning > Optics Thresholds** tabs.

e. Compare the value recorded in Step c with the values listed in the RX Power High and RX Power Low columns. Verify that the received power on the transponder, muxponder, or line card is within the allowed receiving range according to optical card sensitivity specifications. See the Chapter 14, "Card Reference," for information about card specifications.

Step 13 Perform a short-term bit error rate (BER) test:

a. Complete the "DLP-G136 Clear Selected PM Counts" task on page 8-6 for the transponder, muxponder, or line card.

b. Click the **Payload PM** tab, or, if OTN is provisioned, click the **OTN PM** tab.

c. Perform a short-term BER test using a test set or protocol analyzer.

Note To see an accurate performance monitoring count, the BER test results must be consistent with the transmitted bit rate for at least 10 minutes.

Note For information about using a test set or protocol analyzer, refer to the test set or protocol analyzer user guide.

Step 14 Repeat Steps 3 through 13 for each channel in your site plan.

Step 15 If a node fails any test, repeat the test after verifying correct setup and configuration. If the test fails again, refer to the next level of support.

After all tests are successfully completed and no alarms exist in the network, the network is ready for service.

Stop. You have completed this procedure.

DLP-G97 Provision a Proxy Tunnel

Purpose	This task sets up a proxy tunnel to communicate with a non-ONS far-end node. Proxy tunnels are only necessary when the proxy server is enabled and a foreign GCC termination exists, or if static routes exist so that the GCC network is used to access remote networks or devices. You can provision a maximum of 12 proxy server tunnels.
Tools/Equipment	None
Prerequisite Procedures	DLP-G46 Log into CTC, page 2-25 DLP-G76 Provision GCC Terminations, page 3-62
Required/As Needed	As needed
Onsite/Remote	Onsite or remote
Security Level	Superuser

Note If the proxy server is disabled, you cannot set up a proxy tunnel.

Step 1 Click the **Provisioning > Network > Proxy** subtabs.

Step 2 Click **Create**.

Step 3 In the Create Tunnel dialog box, complete the following:

- Source Address—Type the IP address of the source node (32 bit length) or source subnet (any other length).
- Length—Choose the length of the source subnet mask.
- Destination Address—Type the IP address of the destination node (32 bit length) or destination subnet (any other length).
- Length—Choose the length of the destination subnet mask.

Step 4 Click **OK**.

Step 5 Continue with your originating procedure (NTP).

DLP-G98 Provision a Firewall Tunnel

Purpose	This task provisions destinations that will not be blocked by the firewall. Firewall tunnels are only necessary when the proxy server is enabled and a foreign GCC termination exists, or if static routes exist so that the GCC network is used to access remote networks or devices. You can provision a maximum of 12 firewall tunnels.
Tools/Equipment	None
Prerequisite Procedures	DLP-G46 Log into CTC, page 2-25 DLP-G76 Provision GCC Terminations, page 3-62
Required/As Needed	As needed
Onsite/Remote	Onsite or remote
Security Level	Superuser

Note If the proxy server is configured as proxy-only or is disabled, you cannot set up a firewall tunnel.

Step 1 Click the **Provisioning > Network > Firewall** subtabs.

Step 2 Click **Create**.

Step 3 In the Create Tunnel dialog box, complete the following:

- Source Address—Type the IP address of the source node (32 bit length) or source subnet (any other length).
- Length—Choose the length of the source subnet mask.
- Destination Address—Type the IP address of the destination node (32 bit length) or destination subnet (any other length).
- Length—Choose the length of the destination subnet mask.

Step 4 Click **OK**.

Step 5 Continue with your originating procedure (NTP).

DLP-G99 Create a Provisionable Patchcord

Purpose	This task creates a provisionable patchcord, also called a virtual link. They appear as dashed lines in CTC network view. For the specific situations in which a patchcord is necessary, see the "19.3 Provisionable Patchcords" section on page 19-19.
Tools/Equipment	OC-N, transponder/muxponder, optical add/drop multiplexer, and multiplexer/demultiplexer cards
Prerequisite Procedures	DLP-G46 Log into CTC, page 2-25 NTP-G94 Provision Pluggable Port Modules, page 10-29 for transponder and muxponder cards
Required/As Needed	As needed
Onsite/Remote	Onsite or remote
Security Level	Provisioning and higher

Note An optical port requires two patchcords when the remote end is Y-cable protected or is an add/drop multiplexer or multiplexer/demultiplexer port.

Step 1 In node view, click the **Provisioning > Comm Channels > Provisionable Patchcords** tabs. If you are in network view, click the **Provisioning > Provisionable Patchcords** tabs.

Step 2 Click **Create**. The Provisionable Patchcord dialog box appears.

Step 3 In the Origination Node area, complete the following:

- **a.** If you are in node view, the Origination Node defaults to the current node. If you are in network view, click the desired origination node from the drop-down list.
- **b.** Type a patchcord identifier (0 through 32767) in the TX/RX ID field.
- **c.** Click the desired origination slot/port from the list of available slots/ports.

Step 4 In the Termination Node area, complete the following:

- **a.** Click the desired termination node from the drop-down list. If the remote node has not previously been discovered by CTC but is accessible by CTC, type the name of the remote node.
- **b.** Type a patchcord identifier (0 through 32767) in the TX/RX ID field. The origination and termination IDs must be different if the patchcord is set up between two cards on the same node.
- **c.** Click the desired termination slot/port from the list of available slots/ports. The origination port and the termination port must be different.

Step 5 If you need to provision transmit and receive separately for multiplexer/demultiplexer cards, check the **Separate Tx/Rx** check box. If not, continue with Step 6. The origination and termination TX ports are already provisioned. Complete the following to provision the RX ports:

- **a.** In the Origination Node area, type a patchcord identifier (0 through 32767) in the RX ID field. The origination Tx and Rx and termination Tx and Rx IDs must be different.
- **b.** Click the desired origination slot/port from the list of available slots/ports.
- **c.** In the Termination Node area, type a patchcord identifier (0 through 32767) in the RX ID field. The origination Tx and Rx and termination Tx and Rx IDs must be different.
- **d.** Click the desired termination slot/port from the list of available slots/ports.

Step 6 Click **OK**.

Step 7 If you provisioned a patchcord on a port in a 1+1 protection group, a dialog box appears to ask if you would like to provision the peer patchcord. Click **Yes**. Repeat Steps 3 through 6.

Step 8 Return to your originating procedure (NTP).

NTP-G55 Verify the Optical Receive Power

Purpose	This procedure verifies the optical receive power.
Tools/Equipment	Optical power meter
Prerequisite Procedures	DLP-G46 Log into CTC, page 2-25
Required/As Needed	As needed
Onsite/Remote	Onsite
Security Level	Provisioning or higher

Step 1 Complete the "DLP-G46 Log into CTC" task on page 2-25 at an ONS 15454 on the network.

Step 2 Using an optical power meter, check the receive optical power on both ends of the span:

a. Identify a transmit port on an AD-xC-xx.x, 32DMX-O, 32DMX, or 4MD card in the node that you want to test and connect it to the optical power meter.

b. Read the values displayed on the optical power meter. These values must be consistent with the data provided by the MetroPlanner installation file, +/– 1 dB. To view MetroPlanner values, click the **Provisioning > WDM-ANS > Provisioning** tabs. For 32DMX-O and 32DMX cards, the values are listed in the Channel x Drop Power field (dwdm.rx.power.DropChxW/E) where x = 1 to 32. For OADM cards, the fields are listed in the Band [x] Drop (dwdm.rx.power.DropBxW/E) field where x = 1 to 8.

Note For information about using an optical power meter, refer to the optical power meter user guide.

Step 3 If the optical power is too low (indicated by an alarm or APC out of range or skipped condition), check the fiber connections as appropriate to your node configuration:

- Check the fiber connections between the OPT-BST amplifier or the OSC-CSM card and the OPT-PRE amplifier or the next OADM card.
- Check the fiber connections between the OADM cards and if needed clean the connectors. See the "NTP-G115 Clean Fiber Connectors" procedure on page 11-32.

Step 4 If the power coming from the AD-xC-xx.x card is higher than required, put an external optical attenuator before the client interface input in order to meet the power requirement.

Step 5 If the power coming from the 32DMX-O card is higher or lower than required, you can regulate the VOA in CTC.

- From the 32DMX-O or 32DMX card view, choose the **Provisioning > Optical Chn > Parameters** tabs. The VOA columns including the VOA power and attenuation reference points can be manually set according to your site plan.

- Changing the VOA power and attenuation calibration values adjusts the power and attenuation reference settings.

Stop. You have completed this procedure.

NTP-G56 Verify the OSNR

Purpose	This procedure verifies the OSNR. The OSNR is the ratio between the signal power level and the noise power level.
Tools/Equipment	Optical spectrum analyzer
Prerequisite Procedures	DLP-G46 Log into CTC, page 2-25
Required/As Needed	As needed
Onsite/Remote	Onsite
Security Level	Provisioning or higher

Step 1 Complete the "DLP-G46 Log into CTC" task on page 2-25 at an ONS 15454 on the network.

Step 2 Using an optical spectrum analyzer, check the received OSNR for each transmitted channel on both ends of the span:

a. Identify the last OSC-CSM, OPT-PRE, or OPT-BST MON port before the channel is dropped. If OPT-PRE cards are installed with an OPT-BST or OSC-CSM card, use the OPT-PRE MON port.

b. Determine the OSNR values based on the optical spectrum retrieved. These values must be consistent with the OSNR values provided by the MetroPlanner installation file, +/– 1 dB. The MetroPlanner OSNR values are only valid for the receive locations of a dropped channel. Therefore, OSNR values of an OADM express channel cannot be compared to the MetroPlanner values.

Note For OSNR values for each card class, refer to Chapter 14, "Card Reference."

Step 3 If the OSNR is too low, check the following, depending on your node configuration:

Note The purpose of this step is not to improve the signal-to-noise ratio (SNR), but to match the per-channel power level within the receive (RX) port power range.

- Check the fiber connections between the OPT-BST amplifier or the OSC-CSM and the OPT-PRE amplifier and if needed, clean the connectors. See the "NTP-G115 Clean Fiber Connectors" procedure on page 11-32.
- On the near-end OPT-BST amplifier, check the equalization of the added channels at the monitor output.
- On the OPT-PRE amplifier, check the output power on both COM TX and DC TX ports.
- On the far-end OPT-PRE amplifier, check the amplifier gain tilt at the monitor output.

Stop. You have completed this procedure.

NTP-G57 Create a Logical Network Map

Purpose	This procedure allows a superuser to create a consistent network view for all nodes on the network.
Tools	None
Prerequisite Procedures	This procedure assumes that network turn up is complete.
Required/As Needed	As needed
Onsite/Remote	Onsite or remote
Security Level	Superuser

Step 1 Complete the "DLP-G46 Log into CTC" task on page 2-25 at a node on the network where you want to create the network map. If you are already logged in, continue with Step 2.

Step 2 From the View menu, choose **Go to Network View**.

Step 3 Change the position of the nodes in the network view according to your site plan.

a. Click a node to select it, then press the **Ctrl** key while you drag and drop a node icon to a new location.

b. Repeat Step a for each node you need to position.

Step 4 On the network view map, right-click and choose **Save Node Position**.

Step 5 Click **Yes in the Save Node Position dialog box.**

CTC opens a progress bar and saves the new node positions.

Note Retrieve, Provisioning, and Maintenance users can move nodes on the network map, but only Superusers can save new network map configurations. To restore the view to a previously saved version of the network map, right-click on the network view map and choose Reset Node Position.

Stop. You have completed this procedure.

Create Channels and Circuits

This chapter explains how to create Cisco ONS 15454 dense wavelength division multiplexing (DWDM) optical channel network connections (OCHNCs) and overhead circuits.

Note Unless otherwise specified, "ONS 15454" refers to both ANSI and ETSI shelf assemblies.

Before You Begin

Before performing any of the following procedures, investigate all alarms and clear any trouble conditions. Refer to the *Cisco ONS 15454 SONET and DWDM Troubleshooting Guide* as necessary.

This section lists the chapter procedures (NTPs). Turn to a procedure for applicable tasks (DLPs).

1. NTP-G58 Locate and View Optical Channel Network Connections, page 6-2—Complete as needed to find, view, and filter OCHNCs.
2. NTP-G59 Create and Delete Optical Channel Network Connections, page 6-8—Complete as needed.
3. NTP-G60 Create Overhead Circuits, page 6-12—Complete as needed to create IP-encapsulated tunnels, provision orderwire, or user data channel (UDC) circuits.
4. NTP-G61 Modify and Delete Overhead Circuits, page 6-17—Complete as needed to repair IP circuits and delete overhead circuits.
5. NTP-G62 Create a J0 Section Trace, page 6-18—Complete as needed to monitor interruptions or changes to traffic between two nodes.

NTP-G58 Locate and View Optical Channel Network Connections

Purpose	This procedure allows you to locate and view DWDM OCHNCs.
Tools/Equipment	None
Prerequisite Procedures	DLP-G105 Provision DWDM Optical Channel Network Connections, page 6-9
Required/As Needed	As needed
Onsite/Remote	Onsite or remote
Security Level	Retrieve or higher

Step 1 Complete the "DLP-G46 Log into CTC" task on page 2-25 at a node on the network where you want to view the circuits. If you are already logged in, continue with Step 2.

Note Do not check Disable Circuit Management in the Login dialog box. No circuits appear if this option is checked.

Step 2 As needed, complete the "DLP-G100 Search for Optical Channel Network Connections" task on page 6-2.

Step 3 As needed, complete the "DLP-G101 View Optical Channel Network Connection Information" task on page 6-3.

Step 4 As needed, complete the "DLP-G102 Filter the Display of Optical Channel Network Connections" task on page 6-6.

Step 5 As needed, complete the "DLP-G103 View Optical Channel Network Connections on a Span" task on page 6-7.

Stop. You have completed this procedure.

DLP-G100 Search for Optical Channel Network Connections

Purpose	This task searches for DWDM OCHNCs and ONS 15454 circuits at the network, node, or card level.
Tools/Equipment	None
Prerequisite Procedures	DLP-G46 Log into CTC, page 2-25
Required/As Needed	As needed
Onsite/Remote	Onsite or remote
Security Level	Retrieve or higher

Step 1 Navigate to the appropriate Cisco Transport Controller (CTC) view:

- To search the entire network, choose **View > Go to Network View**.

- To search for circuits that originate, terminate, or pass through a specific node, choose **View > Go to Other Node**, then choose the node you want to search and click **OK**.
- To search for circuits that originate, terminate, or pass through a specific card, double-click the card on the shelf graphic in node view to open the card in card view.

Step 2 Click the **Circuits** tab.

Step 3 If you are in node or card view, choose the scope for the search, **Node** or **Network (All)**, in the Scope drop-down list located at the bottom right side of the screen.

Step 4 Click **Search**.

Step 5 In the Circuit Name Search dialog box, complete the following:

- Find What—Enter the text of the circuit name you want to find.
- Match whole word only—Check this check box to instruct CTC to select circuits only if the entire word matches the text in the Find What field.
- Match case—Check this check box to instruct CTC to select circuits only when the capitalization matches the capitalization entered in the Find What field.
- Direction—Choose the direction for the search. Searches are conducted up or down from the currently selected circuit.

Step 6 Click **Find Next**. If a match is found, click **Find Next** again to find the next circuit.

Step 7 Repeat Steps 5 and 6 until you are finished, then click **Cancel**.

Step 8 Return to your originating procedure (NTP).

DLP-G101 View Optical Channel Network Connection Information

Purpose	This task provides information about DWDM OCHNCs and ONS 15454 circuits.
Tools/Equipment	None
Prerequisite Procedures	DLP-G46 Log into CTC, page 2-25
Required/As Needed	As needed
Onsite/Remote	Onsite or remote
Security Level	Retrieve or higher

Step 1 Navigate to the appropriate CTC view:

- To view circuits for an entire network, choose **View > Go to Network View**.
- To view circuits that originate, terminate, or pass through a specific node, choose **View > Go to Other Node**, then choose the node you want to search and click **OK**.
- To view circuits that originate, terminate, or pass through a specific card, in node view, double-click the card containing the circuits you want to view.

Note In node or card view, you can change the scope of the circuits that appear by choosing Card (in card view), Node, or Network from the Scope drop-down list in the bottom right corner of the Circuits window.

Step 2 Click the **Circuits** tab. The Circuits tab shows the following information:

- Circuit Name—Name of the circuit. The circuit name can be manually assigned or automatically generated.
- Type—Circuit types are OCHNC.

  STS, VT, VTT (VT tunnel), VAP (VT aggregation point), STS-v (STS VCAT circuit), and VT-v (VT VCAT circuit) are not applicable for ANSI DWDM nodes. HOP (high-order circuit), LOP (low-order circuit), VCT (VC low-order tunnel), VCA (VC low-order aggregation point), HOP_v (high-order virtual concatenated [VCAT] circuit), or LOP_v (low-order VCAT circuit) are not applicable for ETSI DWDM nodes.
- Size—Circuit size. OCHNC sizes are Equipped not specific, Multi-rate, 2.5 Gbps No FEC (forward error correction), 2.5 Gbps FEC, 10 Gbps No FEC, and 10 Gbps FEC. VT, STS, and VCAT circuits are not applicable to ANSI DWDM nodes. VC12, VC3, VC4, and VCAT circuits are not applicable to ETSI DWDM nodes.
- OCHNC Wlen—For OCHNCs, the wavelength provisioned for the optical channel network connection. See Table 6-3 on page 6-9 for a list of channels and wavelengths.
- Direction—The circuit direction, either two-way or one-way.
- OCHNC Dir—The direction of the OCHNC, either East to West or West to East. If the direction is West to East, the channel exits from the node through the LINE-TX port of the OSC-CSM or OPT-BST card (typically in Slot 17). If the direction is East to West, the channel exits from the node through the LINE-TX port of OSC-CSM or OPT-BST card (typically in Slot 1).
- Protection—The type of circuit protection. See Table 6-1 for a list of protection types.
- Status—The circuit status. Table 6-2 lists the circuit statuses that can appear.
- Source—The circuit source in the format: *node/slot/port "port name"* (the port name will appear in quotes).
- Destination—The circuit destination in same format as the circuit source. STSs, VTs, VCs, and tributary units are not applicable to DWDM nodes.
- # of VLANS—The number of VLANs used by an Ethernet circuit. VLANs are not applicable to DWDM nodes.
- # of Spans—The number of inter-node links that constitute the circuit. Right-clicking the column shows a shortcut menu from which you can choose to show or hide circuit span detail.
- State—The circuit service state, which is an aggregate of its cross-connects. For ANSI, the service states are IS, OOS, or OOS-PARTIAL. For ETSI, the service states are Unlocked, Locked, or Locked-partial. For more information about ANSI and ETSI service states, see the Appendix C, "DWDM Enhanced State Model."
  - IS/Unlocked—All cross-connects are in service and operational.
  - OOS/Locked—All cross-connects are Out-of-Service and Management, Maintenance (OOS-MA,MT) and/or Out-of-Service and Management, Disabled (OOS-MA,DSBLD) for ANSI or Locked-enabled,maintenance and/or Locked-enabled,disabled for ETSI.
  - OOS-PARTIAL/Locked-partial—At least one cross-connect is In-Service and Normal (IS-NR [ANSI]) or Unlocked-enabled (ETSI) and others are out-of-service.

Table 6-1 Circuit Protection Types

Protection Type	Description
Y-Cable	The circuit is protected by a transponder or muxponder card Y-cable protection group.
Splitter	The circuit is protected by the protect transponder splitter protection.
Unprot (black)	A circuit with a source and destination on different nodes is not protected.
N/A	A circuit with connections on the same node is not protected.
Unknown	A circuit has a source and destination on different nodes and communication is down between the nodes. This protection type appears if not all circuit components are known.

Table 6-2 Cisco ONS 15454 Circuit Status

Status	Definition/Activity
CREATING	CTC is creating a circuit.
DISCOVERED	CTC created a circuit. All components are in place and a complete path exists from the circuit source to the circuit destination.
DELETING	CTC is deleting a circuit.
PARTIAL	A CTC-created circuit is missing a cross-connect or network span, a complete path from source to destination(s) does not exist, or an alarm interface panel (AIP) change occurred on one of the circuit nodes and the circuit is in need of repair. (AIPs store the node MAC address.) In CTC, circuits are represented using cross-connects and network spans. If a network span is missing from a circuit, the circuit status is PARTIAL. However, a PARTIAL status does not necessarily mean a circuit traffic failure has occurred, because traffic might flow on a protect path. Network spans are in one of two states: up or down. On CTC circuit and network maps, up spans are shown as green lines, and down spans are shown as gray lines. If a failure occurs on a network span during a CTC session, the span remains on the network map but its color changes to gray to indicate the span is down. If you restart your CTC session while the failure is active, the new CTC session cannot discover the span and its span line will not appear on the network map. Subsequently, circuits routed on a network span that goes down will appear as DISCOVERED during the current CTC session, but they will appear as PARTIAL to users who log in after the span failure. The PARTIAL status does not appear for OCHNC circuit types.
DISCOVERED_TL1	A TL1-created circuit or a TL1-like CTC-created circuit is complete. A complete path from source to destination(s) exists. This status does not appear for OCHNC circuit types.
PARTIAL_TL1	A TL1-created circuit or a TL1-like CTC-created circuit is missing a cross-connect, and a complete path from source to destination(s) does not exist. This status does not appear for OCHNC circuit types.

Step 3 Return to your originating procedure (NTP).

DLP-G102 Filter the Display of Optical Channel Network Connections

Purpose	This task filters the display of OCHNCs and circuits in the Circuits window. You can filter the circuits in network, node, or card view based on circuit or OCHNC name, size, type, direction, and other attributes.
Tools/Equipment	None
Prerequisite Procedures	DLP-G46 Log into CTC, page 2-25
Required/As Needed	As needed
Onsite/Remote	Onsite or remote
Security Level	Retrieve or higher

Step 1 Navigate to the appropriate CTC view:

- To filter network circuits, choose **View > Go to Network View**.
- To filter circuits that originate, terminate, or pass through a specific node, choose **View > Go to Other Node**, then choose the node you want to search and click **OK**.
- To filter circuits that originate, terminate, or pass through a specific card, double-click the card on the shelf graphic in node view to open the card in card view.

Step 2 Click the **Circuits** tab.

Step 3 Set the attributes for filtering the circuit display:

a. Click the **Filter** button.

b. In the Circuit Filter dialog box, set the filter attributes by choosing one or more of the following:

- Name—Enter a complete or partial circuit name to filter circuits based on the circuit name; otherwise leave the field blank.
- Direction—Choose one: **Any** (direction not used to filter circuits), **1-way** (display only one-way circuits), or **2-way** (display only two-way circuits).
- OCHNC Dir—(DWDM optical channel network connections only.) Choose one: **East to West** (displays only east-to-west circuits); **West to East** (displays only west-to-east circuits).
- OCHNC Wlen—(DWDM optical channel network connections only.) Choose an OCHNC wavelength to filter the circuits. For example, choosing 1530.33 will display channels provisioned on the 1530.33-nm wavelength.
- Status—Choose one: **Any** (status not used to filter circuits), **Discovered** (display only discovered circuits; OCHNCs have Discovered status only) or **Partial** (display only partial circuits, that is, circuits missing a connection or span to form a complete path).
- State—Choose one: **OOS** (ANSI) or **Locked** (ETSI) to display only out-of-service circuits; **IS** (ANSI) or **Unlocked** (ETSI) to display only in-service circuits (optical channel network connections have IS/Unlocked states only); or **OOS-PARTIAL** (ANSI) or **Locked-partial** (ETSI) to display only circuits with cross-connects in mixed service states.
- Slot—Enter a slot number to filter circuits based on the source or destination slot; otherwise leave the field blank.

- Port—Enter a port number to filter circuits based on the source or destination port; otherwise leave the field blank.
- Type—Choose one: **Any** (type not used to filter circuits) or **OCHNC** (displays only optical channel network connections).

  STS (displays only STS circuits), VT (displays only VT circuits), VT Tunnel (displays only VT tunnels), STS-V (displays STS VCAT circuits), VT-V (displays VT VCAT circuits), and VT Aggregation Point (displays only VT aggregation points) are not applicable to ANSI DWDM nodes.

  VC_HO_PATH_CIRCUIT (displays VC4 and VC4-Nc circuits), VC_LO_PATH_CIRCUIT (displays only VC3 and VC12 circuits), VC_LO_PATH_TUNNEL (displays only low-order tunnels), VC_LO_PATH_AGGREGATION (displays only log-order aggregation points), VC_HO_PATH_VCAT_CIRCUIT (displays high-order VCAT circuits), VC_LO_PATH_VCAT_CIRCUIT (displays low-order VCAT circuits) are not applicable to ETSI DWDM nodes.
- Size—Click the appropriate check boxes to filter circuits based on size: Multi-rate, Equipment non specific, 2.5 Gbps FEC, 2.5 Gbps No FEC, 10 Gbps FEC, or 10 Gbps No FEC.

  VT1.5, STS-1, STS3c, STS-6c, STS-9c, STS-12c, STS-24c, STS-48c, and STS-192c are not applicable to ANSI DWDM nodes. VC12, VC3, VC4, VC4-2c, VC4-3c, VC4-4c, VC4-6c, VC4-8c, VC4-9c, VC4-16c, and VC4-64 are not applicable to ETSI DWDM nodes.

  The check boxes shown depend on the Type field selection. If you chose Any, all sizes are available. If you chose OCHNC as the circuit type, Multi-rate, Equipment non specific, 2.5 Gbps FEC, 2.5 Gbps No FEC, 10 Gbps FEC, and 10 Gbps No FEC appear.

Step 4 Click **OK**. Circuits matching the attributes in the Filter Circuits dialog box appear in the Circuits window.

Step 5 To turn filtering off, click the Filter icon in the lower right corner of the Circuits window. Click the icon again to turn filtering on, and click the **Filter** button to change the filter attributes.

Step 6 Return to your originating procedure (NTP).

DLP-G103 View Optical Channel Network Connections on a Span

Purpose	This task allows you to view OCHNCs and circuits on an ONS 15454 span.
Tools/Equipment	None
Prerequisite Procedures	DLP-G105 Provision DWDM Optical Channel Network Connections, page 6-9 DLP-G46 Log into CTC, page 2-25
Required/As Needed	As needed
Onsite/Remote	Onsite or remote
Security Level	Retrieve or higher

Step 1 In node view, choose **View > Go to Network View**. If you are already in network view, continue with Step 2.

Step 2 Right-click the green line containing the circuits you want to view and choose **Circuits** to view DWDM OCHNCs or unprotected circuits on the span.

In the Circuits on Span dialog box, you can view information about the circuits that traverse the span. The information that appears depends on the circuit type. For DWDM OCHNCs, the following information appears:

- OCHNC Wavelength—The wavelength provisioned for the OCHNC.
- OCHNC Dir—The direction provisioned for the OCHNC, either east-to-west or west-to-east.
- Circuit—The OCHNC circuit name.

Step 3 Return to your originating procedure (NTP).

NTP-G59 Create and Delete Optical Channel Network Connections

Purpose	This procedure creates and deletes DWDM OCHNCs.
Tools/Equipment	None
Prerequisite Procedures	Chapter 3, "Turn Up a Node"
Required/As Needed	As needed
Onsite/Remote	Onsite or remote
Security Level	Provisioning or higher

Step 1 Complete the "DLP-G46 Log into CTC" task on page 2-25 at a node on the network where you want to create and delete OCHNCs. If you are already logged in, continue with Step 2.

Step 2 If you want to assign a name to the OCHNC source and destination ports before you create the circuit, complete the "DLP-G104 Assign a Name to a Port" task on page 6-8. If not, continue with the next step.

Step 3 Complete the "DLP-G105 Provision DWDM Optical Channel Network Connections" task on page 6-9 as needed.

Step 4 Complete the "DLP-G106 Delete Optical Channel Network Connections" task on page 6-11 as needed.

Stop. You have completed this procedure.

DLP-G104 Assign a Name to a Port

Purpose	Use this task to assign a name to a port on any ONS 15454 card.
Tools/Equipment	None
Prerequisite Procedures	DLP-G46 Log into CTC, page 2-25
Required/As Needed	As needed
Onsite/Remote	Onsite or remote
Security Level	Provisioning or higher

Step 1 Double-click the card that has the port you want to provision.

Step 2 Click the **Provisioning** tab.

Step 3 Click the **Port Name** column for the port number to which you are assigning a name.

Step 4 Type the port name.

The port name can be up to 32 alphanumeric/special characters. The field is blank by default.

Step 5 Click **Apply**.

Step 6 Return to your originating procedure (NTP).

DLP-G105 Provision DWDM Optical Channel Network Connections

Purpose	This procedure creates an OCHNC between ONS 15454s that are provisioned for DWDM.
Tools/Equipment	An OCHNC add port on the source node and an OCHNC drop port on destination node of the same wavelength are required. DLP-G46 Log into CTC, page 2-25
Prerequisite Procedures	All procedures in Chapter 3, "Turn Up a Node" must be completed at all nodes within the OCHNC route.
Required/As Needed	As needed
Onsite/Remote	Onsite
Security Level	Provisioning or higher

Step 1 Choose **View > Go to Network View**.

Step 2 Click the **Circuits** tab, then click **Create**.

Step 3 In the Circuit Creation dialog box, choose **OCHNC** from the Circuit Type list.

Step 4 Click **Next**.

Step 5 Define the circuit attributes:

- Name—Assign a name to the OCHNC. The name can be alphanumeric and up to 48 characters (including spaces). Circuit names should be 44 characters or less if you want the ability to create monitor circuits. If you leave the field blank, CTC assigns a default name to the circuit.
- Size—Equipped non specific is the default. You cannot change it.
- OCHNC Channel—Choose the wavelength you want to provision. Table 6-3 lists the thirty-two available wavelengths.

Table 6-3 OCHNC Channels

Channel No.	Channel ID	Frequency (GHz)	Wavelength (nm)
1	30.3	195.9	1530.33
2	31.2	195.8	1531.12
3	31.9	195.7	1531.90
4	32.6	195.6	1532.68
5	34.2	195.4	1534.25

Table 6-3 OCHNC Channels (continued)

Channel No.	Channel ID	Frequency (GHz)	Wavelength (nm)
6	35.0	195.3	1535.04
7	35.8	195.2	1535.82
8	36.6	195.1	1536.61
9	38.1	194.9	1538.19
10	38.9	194.8	1538.98
11	39.7	194.7	1539.77
12	40.5	194.6	1540.56
13	42.1	194.4	1542.14
14	42.9	194.3	1542.94
15	43.7	194.2	1543.73
16	44.5	194.1	1544.53
17	46.1	193.9	1546.12
18	46.9	193.8	1546.92
19	47.7	193.7	1547.72
20	48.5	193.6	1548.51
21	50.1	193.4	1550.12
22	50.9	193.3	1550.92
23	51.7	193.2	1551.72
24	52.5	193.1	1552.52
25	54.1	192.9	1554.13
26	54.9	192.8	1544.94
27	55.7	192.7	1555.75
28	56.5	192.6	1556.55
29	58.1	192.4	1558.17
30	58.9	192.3	1558.98
31	59.7	192.2	1559.79
32	60.6	192.1	1560.61

- OCHNC Direction—Choose the OCHNC direction, either East to West or West to East. If you choose West to East, the channel will exit the node through the LINE-TX port of the OSC-CSM or OPT-BST card with its line direction set to West to East. The card is usually installed in Slot 17. If you choose East to West, the channel will exit the node through the LINE-TX port of the OSC-CSM or OPT-BST card with its line direction set to East to West. The card is usually installed in Slot 1.
- Bidirectional—Check this check box to create a bidirectional OCHNC; uncheck it to create a unidirectional OCHNC.

Step 6 Click **Next**.

Step 7 In the Circuit Source area, choose the source node from the Node drop-down list.

Step 8 Click **Next**.

Step 9 In the Circuit Destination area, choose the destination node from the Node drop-down list.

Step 10 Click **Finish**.

Stop. You have completed this procedure.

DLP-G106 Delete Optical Channel Network Connections

Purpose	This task deletes circuits and DWDM OCHNCs.
Tools/Equipment	None
Prerequisite Procedures	DLP-G46 Log into CTC, page 2-25
Required/As Needed	As needed
Onsite/Remote	Onsite or remote
Security Level	Provisioning or higher

Step 1 Complete the "NTP-G103 Back Up the Database" procedure on page 11-2.

Step 2 Verify that traffic is no longer carried on the OCHNC and that the OCHNC can be safely deleted.

Step 3 Investigate all network alarms and resolve any problems that might be affected by the OCHNC deletion. Refer to the *Cisco ONS 15454 SONET and DWDM Troubleshooting Guide*.

Step 4 Choose **View > Go to Network View**.

Step 5 Click the **Circuits** tab.

Step 6 Choose the OCHNCs you want to delete, then click **Delete**.

Step 7 In the Delete Circuits confirmation dialog box, check **Notify when completed**, as needed.

If checked, the CTC Alerts confirmation dialog box indicates when the OCHNC is deleted. During this time, you cannot perform other CTC functions. If you are deleting many OCHNCs, waiting for confirmation might take a few minutes. Circuits are deleted whether or not this check box is checked.

Note The CTC Alerts dialog box will not automatically open to show a deletion error unless you checked All alerts or Error alerts only in the CTC Alerts dialog box. For more information, see the "DLP-G53 Configure the CTC Alerts Dialog Box for Automatic Popup" task on page 2-33. If the CTC Alerts dialog box is not set to open automatically with a notification, the red triangle inside the CTC Alerts toolbar icon indicates that a notification exists.

Step 8 Complete one of the following:

- If you checked "Notify when completed," the CTC Alerts dialog box appears. If you want to save the information, continue with Step 9. If you do not want to save the information, continue with Step 10.
- If you did not check "Notify when completed," the Circuits window appears. Continue with Step 11.

Step 9 If you want to save the information in the CTC Alerts dialog box, complete the following steps. If you do not want to save it, continue with Step 10.

a. Click **Save**.

b. Click **Browse** and navigate to the directory where you want to save the file.

c. Type the file name using a .txt file extension, and click **OK**.

Step 10 Click **Close** to close the CTC Alerts dialog box.

Step 11 Complete the "NTP-G103 Back Up the Database" procedure on page 11-2.

Step 12 Return to your originating procedure (NTP).

NTP-G60 Create Overhead Circuits

Purpose	This procedure creates overhead circuits on an ONS 15454 network. Overhead circuits include IP-encapsulated tunnels, the Alarm Interface Controller (AIC) and Alarm Interface Controller–International (AIC-I) card orderwire, and the AIC-I card user data channel (UDC).
Tools/Equipment	None
Prerequisite Procedures	None
Required/As Needed	As needed
Onsite/Remote	Onsite or remote
Security Level	Provisioning or higher

Step 1 Complete the "DLP-G46 Log into CTC" task on page 2-25 at the node where you will create the overhead circuit. If you are already logged in, continue with Step 2.

Step 2 Choose **View > Go to Network View**.

Step 3 As needed, complete the "DLP-G107 Create an IP-Encapsulated Tunnel" task on page 6-13, then continue with the next step.

Step 4 After creating an IP-encapsulated tunnel, put the ports that are hosting the IP-encapsulated tunnel in service. See the "DLP-G108 Change the Service State for a Port" task on page 6-14.

Step 5 As needed, complete the "DLP-G109 Provision Orderwire" task on page 6-15.

Step 6 As needed, complete the "DLP-G110 Create a User Data Channel Circuit" task on page 6-16.

Stop. You have completed this procedure.

DLP-G107 Create an IP-Encapsulated Tunnel

Purpose	This task creates a an IP-encapsulated tunnel to transport traffic from third-party SONET/SDH equipment across ONS 15454 networks. IP-encapsulated tunnels are created on the Section DCC channel (D1-D3) (if not used by the ONS 15454 as a terminated data communications channel [DCC]).
Tools/Equipment	An OSCM, OSC-SCM, MXP_2.5_10E, MXP_2.5_10G, MXPP_MR_2.5G, or MXP_MR_2.5G card must be installed.
Prerequisite Procedures	DLP-G46 Log into CTC, page 2-25
Required/As Needed	As needed
Onsite/Remote	Onsite or remote
Security Level	Provisioning or higher

Note Each ONS 15454 can have up to ten IP-encapsulated tunnel connections. Terminated Section DCCs (SDCCs) used by the ONS 15454 cannot be used as a tunnel endpoint, and an SDCC that is used as a tunnel endpoint cannot be terminated. All tunnel connections are bidirectional.

Step 1 Verify that IP addresses are provisioned at both the source and destination nodes of the planned tunnel. For more information, see the "DLP-G56 Provision IP Settings" task on page 3-9.

Step 2 In network view, click the **Provisioning > Overhead Circuits** tabs.

Step 3 Click **Create**.

Step 4 In the Overhead Circuit Creation dialog box, complete the following in the Circuit Attributes area:

- Name—Type the tunnel name.
- Type—Choose **IP Tunnel-D1-D3**.
- Maximum Bandwidth—Type the percentage of total SDCC bandwidth used in the IP tunnel (the minimum percentage is 10 percent).

Step 5 Click **Next**.

Step 6 In the Circuit Source area, complete the following:

- Node—Choose the source node.
- Slot—Choose the source slot.
- Port—If displayed, choose the source port.
- Channel—Displays IPT (D1-D3).

Step 7 Click **Next**.

Step 8 In the Circuit Destination area, complete the following:

- Node—Choose the destination node.
- Slot—Choose the destination slot.
- Port—If displayed, choose the destination port.
- Channel—Displays IPT (D1-D3).

Step 9 Click **Finish**.

Step 10 Return to your originating procedure (NTP).

DLP-G108 Change the Service State for a Port

Purpose	This task puts a port in service or removes a port from service. After creating an IP-encapsulated tunnel, put the ports that are hosting the IP-encapsulated tunnel in service.
Tools/Equipment	None
Prerequisite Procedures	DLP-G46 Log into CTC, page 2-25
Required/As Needed	As needed
Onsite/Remote	Onsite or remote
Security Level	Provisioning or higher

Step 1 In node view on the shelf graphic, double-click the card with the port(s) you want to put in or out of service. The card view appears.

Step 2 Click the **Provisioning > Line** tabs.

Step 3 In the Admin State column for the desired port, choose one of the following from the drop-down list:

- **IS** (ANSI) or **Unlocked** (ETSI)—Places the port in the IS-NR (ANSI) or Unlocked-enabled (ETSI) service state.
- **OOS, DSBLD** (ANSI) or **Locked,disabled** (ETSI)—Places the port in the OOS-MA,DSBLD (ANSI) or Locked-enabled,disabled (ETSI) service state.

  For ANSI nodes, traffic is not passed on the port until the service state is changed to IS-NR; OOS-MA,MT; or Out-of-Service and Autonomous, Automatic In-Service (OOS-AU,AINS). For ETSI nodes, traffic is not passed on the port until the service state is changed to Unlocked-enabled; Locked-enabled,maintenance; or Unlocked-disabled,automaticInService.
- **OOS, MT** (ANSI) or **Locked,maintenance** (ETSI)—Places the port in the OOS-MA,MT/Locked-enabled,maintenance service state. This service state does not interrupt traffic flow, but alarm reporting is suppressed and loopbacks are allowed. Raised fault conditions, whether or not their alarms are reported, can be retrieved on the CTC Conditions tab or by using the TL1 RTRV-COND command. Use the OOS-MA,MT/Locked-enabled,maintenance service state for testing or to suppress alarms temporarily. Change to the IS-NR/Unlocked-enabled or OOS-AU,AINS/Unlocked-disabled,automaticInService service states when testing is complete.
- **IS, AINS** (ANSI) or **Unlocked,automaticInService** (ETSI)—Places the port in the OOS-AU,AINS/Unlocked-enabled,automaticInService service state. In this service state, alarm reporting is suppressed, but traffic is carried and loopbacks are allowed. After the soak period passes, the port changes to IS-NR/Unlocked-enabled. Raised fault conditions, whether their alarms are reported or not, can be retrieved on the CTC Conditions tab or by using the TL1 RTRV-COND command.

For more information about service states, refer to Appendix C, "DWDM Enhanced State Model."

Step 4 If you set the Admin State to IS-AINS/Unlocked,automaticInService, set the soak period time in the AINS Soak field. This is the amount of time that the port will stay in the OOS-AU,AINS/Unlocked-enabled,automaticInService service state after a signal is continuously received. When the soak period elapses, the port changes to the IS-NR/Unlocked-enabled service state.

Step 5 Click **Apply**. The new port service state appears in the Service State column.

Step 6 As needed, repeat this task for each port.

Step 7 Return to your originating procedure (NTP).

DLP-G109 Provision Orderwire

Purpose	This task provisions orderwire on the AIC or the AIC-I card.
Tools/Equipment	An AIC or AIC-I card must be installed in Slot 9. An OSCM, OSC-SCM, MXP_2.5_10E, MXP_2.5_10G, MXPP_MR_2.5G, or MXP_MR_2.5G card must be installed.
Prerequisite Procedures	DLP-G46 Log into CTC, page 2-25
Required/As Needed	As needed
Onsite/Remote	Onsite or remote
Security Level	Provisioning or higher

Step 1 In the network view, click the **Provisioning > Overhead Circuits** tabs.

Step 2 Click **Create**.

Step 3 In the Overhead Circuit Creation dialog box, complete the following fields in the Circuit Attributes area:

- Name—Assign a name to the circuit. The name can be alphanumeric and up to 48 characters (including spaces).
- Circuit Type—Choose either **Local Orderwire** or **Express Orderwire** depending on the orderwire path that you want to create. If regenerators are not used between ONS 15454 nodes, you can use either local or express orderwire channels. If regenerators exist, use the express orderwire channel. You can provision up to four ONS 15454 OC-N ports for each orderwire path.
- PCM—Choose the Pulse Code Modulation voice coding and companding standard, either **Mu_Law** (North America, Japan) or **A_Law** (Europe). The provisioning procedures are the same for both types of orderwire.

Caution When provisioning orderwire for ONS 15454s residing in a ring, do not provision a complete orderwire loop. For example, a four-node ring typically has east and west ports provisioned at all four nodes. However, to prevent orderwire loops, provision two orderwire ports (east and west) at all but one of the ring nodes.

Step 4 Click **Next**.

Step 5 In the Circuit Source area, complete the following:

- Node—Choose the source node.
- Slot—Choose the source slot.
- Port—If displayed, choose the source port.

Step 6 Click **Next**.

Step 7 In the Circuit Destination area, complete the following:

- Node—Choose the destination node.
- Slot—Choose the destination slot.
- Port—If displayed, choose the destination port.

Step 8 Click **Finish**.

Step 9 Return to your originating procedure (NTP).

DLP-G110 Create a User Data Channel Circuit

Purpose	This task creates a user data channel (UDC) circuit on the ONS 15454. A UDC circuit allows you to create a dedicated data channel between nodes.
Tools/Equipment	OSCM, OSC-SCM, MXPP_MR_2.5G, or MXP_MR_2.5G must be installed.
Prerequisite Procedures	DLP-G46 Log into CTC, page 2-25
Required/As Needed	As needed
Onsite/Remote	Onsite or remote
Security Level	Provisioning or higher

Step 1 In network view, click the **Provisioning > Overhead Circuits** tabs.

Step 2 Click **Create**.

Step 3 In the Overhead Circuit Creation dialog box, complete the following fields in the Circuit Attributes area:

- Name—Assign a name to the circuit. The name can be alphanumeric and up to 48 characters (including spaces).
- Type—Choose either **User Data-F1** or **User Data D-4-D-12** from the drop-down list. (User Data D-4-D-12 is not available if the ONS 15454 is provisioned for DWDM.)

Step 4 Click **Next**.

Step 5 In the Circuit Source area, complete the following:

- Node—Choose the source node.
- Slot—Choose the source slot.
- Port—If displayed, choose the source port.

Step 6 Click **Next**.

Step 7 In the Circuit Destination area, complete the following:

- Node—Choose the destination node.
- Slot—Choose the destination slot.
- Port—If displayed, choose the destination port.

Step 8 Click **Finish**.

Step 9 Return to your originating procedure (NTP).

NTP-G61 Modify and Delete Overhead Circuits

Purpose	This procedure repairs IP circuits and deletes overhead circuits.
Tools/Equipment	None
Prerequisite Procedures	NTP-G60 Create Overhead Circuits, page 6-12
Required/As Needed	As needed
Onsite/Remote	Onsite or remote
Security Level	Provisioning or higher

Caution Deleting circuits can be service affecting and should be performed during a maintenance window.

Step 1 Complete the "DLP-G46 Log into CTC" task on page 2-25 for a node on the network where you want to repair or delete a circuit. If you are already logged in, continue with Step 2.

Step 2 As needed, complete the "DLP-G111 Repair an IP Tunnel" task on page 6-17.

Step 3 As needed, complete the "DLP-G112 Delete Overhead Circuits" task on page 6-18.

Stop. You have completed this procedure.

DLP-G111 Repair an IP Tunnel

Purpose	This task repairs circuits that have a OOS-PARTIAL status as a result of node IP address changes.
Tools/Equipment	None
Prerequisite Procedures	DLP-G107 Create an IP-Encapsulated Tunnel, page 6-13
Required/As Needed	As needed
Onsite/Remote	Onsite or remote
Security Level	Provisioning or higher

Step 1 Obtain the original IP address of the node in question.

Step 2 From the View menu, choose **Go to Network View**.

Step 3 From the Tools menu, choose **Overhead Circuits > Repair IP Circuits**.

Step 4 Review the text in the IP Repair wizard and click **Next**.

Step 5 In the Node IP address area, complete the following:

- Node—Choose the node that has an OOS-PARTIAL circuit.
- Old IP Address—Type the node's original IP address.

Step 6 Click **Next**.

Step 7 Click **Finish**.

Step 8 Return to your originating procedure (NTP).

DLP-G112 Delete Overhead Circuits

Purpose	This task deletes overhead circuits. Overhead circuits include IP-encapsulated tunnels, AIC and AIC-I card orderwire, and user data channels.
Tools/Equipment	None
Prerequisite Procedures	DLP-G46 Log into CTC, page 2-25
Required/As Needed	As needed
Onsite/Remote	Onsite or remote
Security Level	Provisioning or higher

Caution Deleting overhead circuits is service affecting if the circuits are in service (IS). To put circuits out of service (OOS), see the "DLP-G108 Change the Service State for a Port" task on page 6-14.

Step 1 From the View menu, choose **Go to Network View**.

Step 2 Click the **Provisioning > Overhead Circuits** tabs.

Step 3 Click the overhead circuit that you want to delete: local or express orderwire, user data, IP-encapsulated tunnel, or DCC tunnel.

Step 4 Click **Delete**.

Step 5 In the confirmation dialog box, click **Yes** to continue.

Step 6 Return to your originating procedure (NTP).

NTP-G62 Create a J0 Section Trace

Purpose	This procedure creates a repeated, fixed-length string of characters used to monitor interruptions or changes to traffic between nodes.
Tools/Equipment	At least one of the following cards must be installed: MXP_MR_2.5G, MXPP_MR_2.5G, TXP_MR_2.5G, TXPP_MR_2.5G, MXP_2.5G_10E, TXP_MR_10E, MXP_2.5G_10G, or TXP_MR_10G.
Prerequisite Procedures	None
Required/As Needed	As needed (optional if path trace is set)
Onsite/Remote	Onsite or remote
Security Level	Provisioning or higher

Step 1 Complete the "DLP-G46 Log into CTC" task on page 2-25 at a node on the network where you will create the section trace. If you are already logged in, continue with Step 2.

Step 2 In node view, double-click the MXP_MR_2.5G, MXPP_MR_2.5G, TXP_MR_2.5G, TXPP_MR_2.5G, MXP_2.5G_10E, TXP_MR_10E, MXP_2.5G_10G, or TXP_MR_10G card.

Step 3 Click the **Provisioning > Line > Section Trace** tabs.

Step 4 From the Port drop-down list, choose the port for the section trace.

Step 5 From the Trace Mode drop-down list, enable the section trace expected string by choosing **Auto** or **Manual**:

- Auto—The first string received from the source port is automatically provisioned as the current expected string. An alarm is raised when a string that differs from the baseline is received.
- Manual—The string entered in the Current Expected String field is the baseline. An alarm is raised when a string that differs from the Current Expected String is received.

Step 6 In the Section Trace String Size area, click **1 byte** or **16 byte**.

Step 7 In the New Transmit String field, enter the string that you want to transmit. Enter a string that makes the destination port easy to identify, such as the node IP address, node name, or another string. If the New Transmit String field is left blank, the J0 transmits a string of null characters.

Step 8 If you set the Section Trace Mode field to Manual, enter the string that the destination port should receive from the source port in the New Expected String field. If you set Section Trace Mode to Auto, skip this step.

Step 9 Click the **Disable AIS and RDI if TIM-P is detected** check box if you want to suppress the alarm indication signal (AIS) and remote defect indication (RDI) when the STS Section Trace Identifier Mismatch Path (TIM-P) alarm appears. Refer to the *Cisco ONS 15454 SONET and DWDM Troubleshooting Guide* for descriptions of alarms and conditions.

Step 10 Click **Apply**.

Step 11 After you set up the section trace, the received string appears in the Received field. The following options are available:

- Click **Hex Mode** to display section trace in hexadecimal format. The button name changes to ASCII Mode. Click it to return the section trace to ASCII format.
- Click the **Reset** button to reread values from the port.
- Click **Default** to return to the section trace default settings (Section Trace Mode is set to Off and the New Transmit and New Expected Strings are null).

Caution Clicking Default will generate alarms if the port on the other end is provisioned with a different string.

The expect and receive strings are updated every few seconds if the Section Trace Mode field is set to Auto or Manual.

Stop. You have completed this procedure.

Manage Alarms

This chapter contains the procedures for viewing and managing the alarms and conditions on a Cisco ONS 15454.

Cisco Transport Controller (CTC) detects and reports alarms generated by the Cisco ONS 15454 and the Optical Networking System (ONS) network. You can use CTC to monitor and manage alarms at a card, node, or network level. You can also view alarm counts on the LCD front panel.

Note Unless otherwise specified, "ONS 15454" refers to both ANSI and ETSI shelf assemblies.

Before You Begin

This section lists the chapter procedures (NTPs). Turn to a procedure for applicable tasks (DLPs).

1. NTP-G63 Document Existing Provisioning, page 7-2—Complete this procedure as needed to print or export node data.
2. NTP-G64 View Alarms, History, Events, and Conditions, page 7-5—Complete this procedure as needed to see alarms and conditions occurring on the node and a complete history of alarm and condition messages.
3. NTP-G65 Delete Cleared Alarms from Display, page 7-13—Complete this procedure as needed to delete cleared alarm information.
4. NTP-G66 View Alarm-Affected Circuits, page 7-14—Complete this procedure as needed to find circuits that are affected by a particular alarm or condition.
5. NTP-G67 View Alarm Counts on the LCD for a Node, Slot, or Port, page 7-16—Complete this procedure as needed to see a statistical count of alarms that have occurred for a slot or port.
6. NTP-G68 Create, Download, and Assign Alarm Severity Profiles, page 7-17—Complete this procedure as needed to change the default severity for certain alarms, to assign the new severities to a port, card, or node, and to delete alarm profiles.
7. NTP-G69 Enable, Modify, or Disable Alarm Severity Filtering, page 7-29—Complete this procedure as needed to enable, disable, or modify alarm severity filtering in the Conditions, Alarms, or History screens at the node or network level.
8. NTP-G70 Suppress Alarms or Discontinue Alarm Suppression, page 7-33—Complete this procedure as needed to suppress reported alarms at the port, card, or node level and to disable the suppress command to resume normal alarm reporting.

9. NTP-G71 Provision External Alarms and Controls on the Alarm Interface Controller Card, page 7-36—Complete this procedure as needed to provision external alarms and controls on the ONS 15454 ANIS Alarm Interface Controller (AIC) card.
10. NTP-G72 Provision External Alarms and Controls on the Alarm Interface Controller-International, page 7-38—Complete this procedure as needed to provision external alarms and controls on the Alarm Interface Controller-International (AIC-I) card.

NTP-G63 Document Existing Provisioning

Purpose	Use this procedure to document existing provisioning by printing card, node, or network CTC information or exporting card, node, or network information as delineated text files to other applications. This procedure is useful for network record keeping and troubleshooting.
Tools/Equipment	A printer connected to the CTC computer by a direct or network connection
Prerequisite Procedures	Chapter 3, "Turn Up a Node"
Required/As needed	As needed
Onsite/Remote	Onsite or remote
Security Level	Retrieve or higher

Step 1 Complete the "DLP-G46 Log into CTC" task on page 2-25 at the node where you want to print or export data. If you are already logged in, continue with Step 2.

Step 2 As needed, complete the "DLP-G113 Print CTC Data" task on page 7-2.

Step 3 As needed, complete the "DLP-G114 Export CTC Data" task on page 7-4.

Stop. You have completed this procedure.

DLP-G113 Print CTC Data

Purpose	This task prints CTC card, node, or network data in graphical or tabular format on a Windows-provisioned printer.
Tools/Equipment	Printer connected to the CTC computer by a direct or network connection
Prerequisite procedures	DLP-G46 Log into CTC, page 2-25
Required/As needed	As needed
Onsite/Remote	Onsite or remote
Security Level	Retrieve or higher

Step 1 Click the tab (and subtab, if present) containing the information you want to print. For example, click the **Alarms** tab to print Alarms window data.

The print operation is available for all network, node, and card view windows.

Step 2 From the File menu choose **Print**. The Print dialog box opens (Figure 7-1).

Figure 7-1 Selecting CTC Data For Print

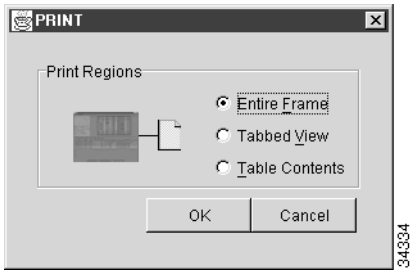

Step 3 In the Print dialog box, click a printing option:

- Entire Frame—Prints the entire CTC window including the graphical view of the card, node, or network. This option is available for all windows.
- Tabbed View—Prints the lower half of the CTC window containing tabs and data. The printout includes the selected tab (on top) and the data shown in the tab window. For example, if you print the History window Tabbed View, you print only history items appearing in the window. This option is available for all windows.
- Table Contents—Prints CTC data in table format without graphical representations of shelves, cards, or tabs. This option applies to all windows except:
  - Provisioning > General > General and Power Monitor windows
  - Provisioning > Network > General and RIP windows
  - Provisioning > Security > Policy, Access, and Legal Disclaimer windows
  - Provisioning > SNMP window
  - Provisioning > Timing window
  - Provisioning > UCP > Node window
  - Maintenance > Cross-Connect > Cards window
  - Maintenance > Database window
  - Maintenance > Diagnostic window
  - Maintenance > Protection window
  - Maintenance > Timing > Source window

  The Table Contents option prints all the data contained in a table and the table column headings. For example, if you print the History window Table Contents view, you print all data included in the table whether or not items appear in the window.

Tip When you print using the Tabbed View option, it can be difficult to distinguish whether the printout applies to the network, node, or card view. To determine the view, compare the tabs on the printout. The network, node, and card views are identical except that network view does not contain an Inventory tab or Performance tab.

Step 4 Click **OK**.

Step 5 In the Windows Print dialog box, click a printer and click **OK**.

Step 6 Repeat this task for each window that you want to print.

Step 7 Return to your originating procedure (NTP).

DLP-G114 Export CTC Data

Purpose	This task exports CTC table data as delineated text to view or edit the data in text editor, word processing, spreadsheet, database management, or web browser applications.
Tools/Equipment	None
Prerequisite procedures	DLP-G46 Log into CTC, page 2-25
Required/As needed	As needed
Onsite/Remote	Onsite or remote
Security Level	Retrieve or higher

Step 1 Click the tab containing the information you want to export (for example, the Alarms tab or the Circuits tab).

Step 2 Choose **Export** from the File menu. The Export dialog box appears (Figure 7-2).

Figure 7-2 Selecting CTC Data For Export

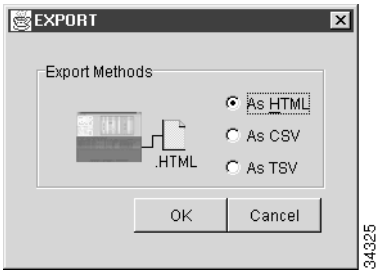

Step 3 In the Export dialog box, click a data format:

- As HTML—Saves data as a simple HTML table file without graphics. The file must be viewed or edited with applications such as Netscape Navigator, Microsoft Internet Explorer, or other applications capable of opening HTML files.
- As CSV—Saves the CTC table as comma-separated values (CSV). This option does not apply to the Maintenance > Timing > Report window.
- As TSV—Saves the CTC table as tab-separated values (TSV).

Step 4 If you want to open a file in a text editor or word processor application, procedures will vary. Typically you can use the File > Open command to view the CTC data, or you can double-click the file name and choose an application such as Notepad.

Text editor and word processor applications format the data exactly as it is exported, including comma or tab separators. All applications that open the data files allow you to format the data.

Step 5 If you want to open the file in spreadsheet and database management applications, procedures will vary. Typically you need to open the application and choose File > Import, then choose a delimited file to format the data in cells.

Spreadsheet and database management programs also allow you to manage the exported data.

Note An exported file cannot be opened in CTC.

The export operation applies to all tabular data except:

- Provisioning > General > General and Power Monitor windows
- Provisioning > Network > General and RIP windows
- Provisioning > Security > Policy, Access, and Legal Disclaimer windows
- Provisioning > SNMP window
- Provisioning > Timing window
- Provisioning > UCP > Node window
- Provisioning > WDM-ANS > Provisioning window
- Maintenance > Cross-Connect > Cards window
- Maintenance > Database window
- Maintenance > Diagnostic window
- Maintenance > Protection window
- Maintenance > Timing > Source and Report windows

Step 6 Click **OK**.

Step 7 In the Save dialog box, enter a name in the File name field using one of the following formats:

- *filename*.html for HTML files
- *filename*.csv for CSV files
- *filename*.tsv for TSV files

Step 8 Navigate to a directory where you want to store the file.

Step 9 Click **OK**.

Step 10 Repeat the task for each window that you want to export.

Step 11 Return to your originating procedure (NTP).

NTP-G64 View Alarms, History, Events, and Conditions

Purpose	Use this procedure to view current or historical alarms and conditions for a card, node, or network. This information is useful for monitoring and troubleshooting hardware and software events.
Tools/Equipment	None
Prerequisite Procedures	None
Required/As Needed	As needed
Onsite/Remote	Onsite or remote
Security Level	Provisioning or higher

Step 1 Complete the "DLP-G46 Log into CTC" task on page 2-25.

Step 2 Complete the "DLP-G115 View Alarms" task on page 7-6 as needed.

Step 3 Complete the "DLP-G116 View Alarm or Event History" task on page 7-8 as needed.

Step 4 Complete the "DLP-G117 Change the Maximum Number of Session Entries for Alarm History" task on page 7-10 as needed.

Step 5 Complete the "DLP-G118 Display Alarms and Conditions Using Time Zone" task on page 7-11 as needed.

Step 6 Complete the "DLP-G119 Synchronize Alarms" task on page 7-11 as needed.

Step 7 Complete the "DLP-G120 View Conditions" task on page 7-12 as needed.

Stop. You have completed this procedure.

DLP-G115 View Alarms

Purpose	Use this to view current alarms on a card, node, or network.
Tools/Equipment	None
Prerequisite Procedures	DLP-G46 Log into CTC, page 2-25
Required/As Needed	As needed
Onsite/Remote	Onsite or remote
Security Level	Provisioning or higher

Step 1 In the card, node, or network view, click the **Alarms** tab to view the alarms for that card, node, or network (Figure 7-3).

Figure 7-3 CTC Node View

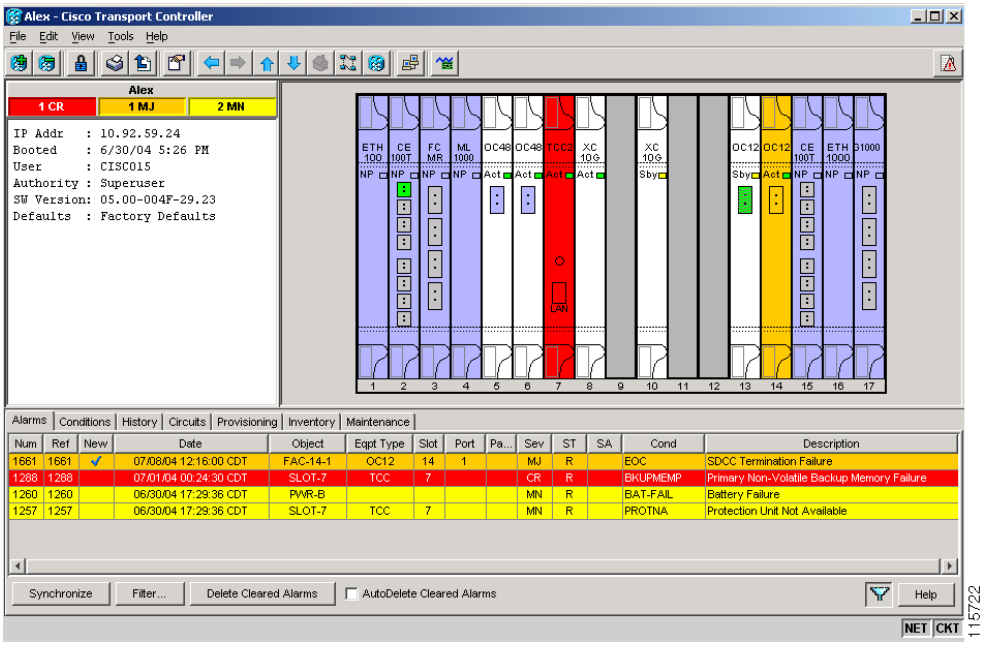

Table 7-1 describes the columns in the Alarms window.

Table 7-1 Alarm Column Descriptions

Column	Information Recorded
Num	Sequence number of the original alarm
Ref	Reference number of the original alarm
New	Indicates a new alarm; to change this status, click either the Synchronize button or the Delete Cleared Alarms button.
Date	Date and time of the alarm.
Object	TL1 access identifier (AID) for the alarmed object; for an STSmon or VTmon, this is the monitored STS or VT.
Eqpt Type	If an alarm is raised on a card, the card type in this slot.
Slot	If an alarm is raised on a card, the slot where the alarm occurred (appears only in network and node view).
Port	If an alarm is raised on a card, the port where the alarm is raised; for STSTerm and VTTerm, the port refers to the upstream card it is partnered with.
Path Width	Indicates how many STSs are contained in the alarmed path. This information complements the alarm object notation, which is explained in the *Cisco ONS 15454 SONET and DWDM Troubleshooting Guide*.
Sev	Severity level: CR (Critical), MJ (Major), MN (minor), NA (Not Alarmed), NR (Not Reported).
ST	Status: R (raised), C (clear).
SA	When checked, indicates a service-affecting alarm.

Table 7-1 Alarm Column Descriptions (continued)

Column	Information Recorded
Cond	The error message/alarm name; these names are alphabetically defined in the *Cisco ONS 15454 SONET and DWDM Troubleshooting Guide.*
Description	Description of the alarm.

Table 7-2 lists the color codes for alarm and condition severities.

Table 7-2 Color Codes for Alarms and Condition Severities

Color	Description
Red	Raised Critical (CR) alarm
Orange	Raised Major (MJ) alarm
Yellow	Raised Minor (MN) alarm
Magenta (pink)	Raised Not Alarmed (NA) condition
Blue	Raised Not Reported (NR) condition
White	Cleared (C) alarm or condition

Step 2 If alarms are present, refer to the *Cisco ONS 15454 SONET and DWDM Troubleshooting Guide* for information and troubleshooting procedures.

Step 3 Return to your originating procedure (NTP).

DLP-G116 View Alarm or Event History

Purpose	This task is used to view past cleared and uncleared ONS 15454 alarm messages at the card, node, or network level. This task is useful for troubleshooting configuration, traffic, or connectivity issues that are indicated by alarms.
Tools/Equipment	None
Prerequisite Procedures	DLP-G46 Log into CTC, page 2-25
Required/As Needed	As needed
Onsite/Remote	Onsite or remote
Security Level	Retrieve or higher

Step 1 Decide whether you want to view the alarm message history at the node, network, or card level.

Step 2 To view node alarm history:

a. In node view, click the **History > Session** tabs to view the alarms and conditions (events) raised during the current session.

b. Click the **History > Node** tabs.

If you check the **Alarms** check box, the node's alarm history appears. If you check the **Events** check box, the node's Not Alarmed and transient event history appears. If you check both check boxes, you will retrieve node history for alarms and events.

c. Click **Retrieve** to view all available messages for the History > Node tabs.

Note Alarms can be unreported when they are filtered out of the display using the Filter button in either tab. See the "DLP-G126 Enable Alarm Filtering" task on page 7-29 for information.

Tip Double-click an alarm in the alarm table or an event (condition) message in the history table to display the view that corresponds to the alarm message. For example, double-clicking a card alarm takes you to card view. In network view, double-clicking a node alarm takes you to node view.

Step 3 To view network alarm history, from node view:

a. From the View menu choose **Go to Network View**.

b. Click the **History** tab.

Alarms and conditions (events) raised during the current session appear.

Step 4 To view card alarm history, from node view:

a. From the View menu choose **Go to Previous View**.

b. Double-click a card on the shelf graphic to open the card-level view.

Note TCC2 cards do not have a card view.

c. Click the **History > Session** tab to view the alarm messages raised during the current session.

d. Click the **History > Card** tab to retrieve all available alarm messages for the card and click **Retrieve**.

If you check the **Alarms** check box, the node's alarm history appears. If you check the **Events** check box, the node's Not Alarmed and transient event history appears. If you check both check boxes, you will retrieve node history for alarms and events.

Note The ONS 15454 can store up to 640 critical alarm messages, 640 major alarm messages, 640 minor alarm messages, and 640 condition messages. When any of these limits is reached, the ONS 15454 discards the oldest events in that category.

Raised and cleared alarm messages (and events, if selected) appear.

Step 5 Return to your originating procedure (NTP).

DLP-G117 Change the Maximum Number of Session Entries for Alarm History

Purpose	This task changes the maximum number of session entries included in the alarm history. Use this task to expand the history list to save information for future reference or troubleshooting.
Tools/Equipment	None
Prerequisite Procedures	DLP-G46 Log into CTC, page 2-25
Required/As Needed	As needed
Onsite/Remote	Onsite or remote
Security Level	Provisioning or higher

Step 1 From the Edit menu, choose **Preferences**.

The CTC Preferences dialog box appears (Figure 7-4).

Figure 7-4 CTC Preferences Dialog Box

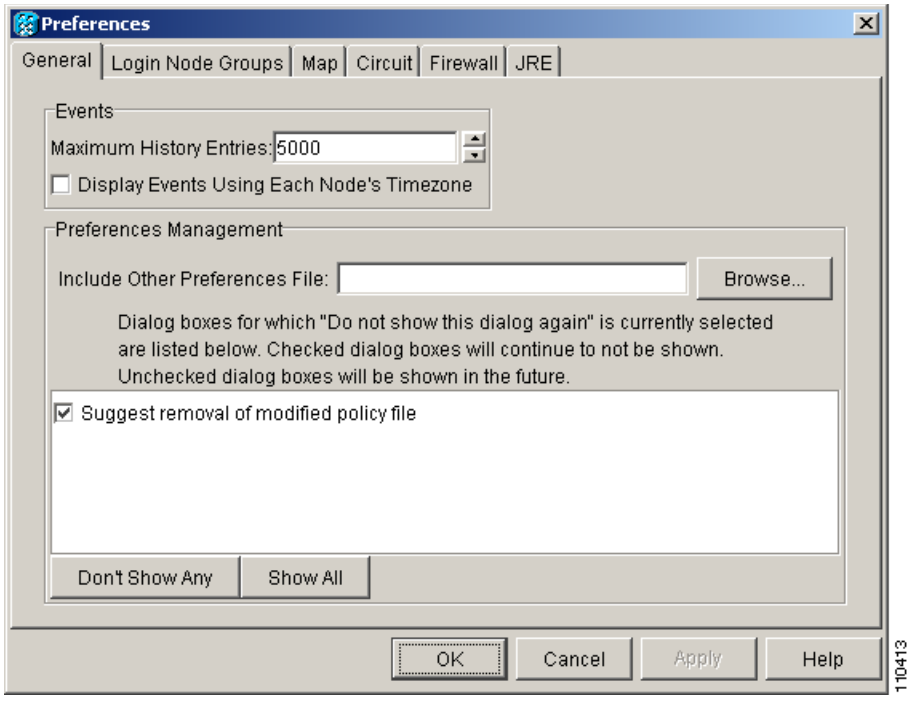

Step 2 Click the up or down arrow buttons next to the Maximum History Entries field to change the entry.

Step 3 Click **Apply** and **OK**.

Note Setting the Maximum History Entries value to the high end of the range uses more CTC memory and could impair CTC performance.

Note This task changes the maximum history entries recorded for CTC sessions. It does not affect the maximum number of history entries viewable for a network, node, or card.

Step 4 Return to your originating procedure (NTP).

DLP-G118 Display Alarms and Conditions Using Time Zone

Purpose	This task changes the timestamp for events to the timezone of the ONS node reporting the alarm. By default, the events timestamp is set to the timezone for the CTC workstation.
Tools/Equipment	None
Prerequisite Procedures	DLP-G46 Log into CTC, page 2-25
Required/As Needed	As needed
Onsite/Remote	Onsite or remote
Security Level	Provisioning or higher

Step 1 From the Edit menu, choose **Preferences**.

The CTC Preferences dialog box appears (Figure 7-4 on page 7-10).

Step 2 Check the **Display Events Using Each Node's Timezone** check box. The Apply button is enabled.

Step 3 Click **Apply** and **OK**.

Step 4 Return to your originating procedure (NTP).

DLP-G119 Synchronize Alarms

Purpose	This task is used to view ONS 15454 events at the card, node, or network level and to refresh the alarm listing so that you can check for new and cleared alarms and conditions.
Tools/Equipment	None
Prerequisite Procedures	DLP-G46 Log into CTC, page 2-25
Required/As Needed	As needed
Onsite/Remote	Onsite or remote
Security Level	Retrieve

Step 1 At the card, node, or network view, click the **Alarms** tab.

Step 2 Click **Synchronize**.

This button causes CTC to retrieve a current alarm summary for the card, node, or network. This step is optional because CTC updates the Alarms window automatically as raise/clear messages arrive from the node.

Note Alarms that have been raised during the session will have a check mark in the Alarms window New column. When you click Synchronize, the check mark disappears.

Step 3 Return to your originating procedure (NTP).

DLP-G120 View Conditions

Purpose	This task is used to view conditions (events with a Not Reported [NR] severity) at the card, node, or network level. Conditions give you a clear record of changes or events that do not result in alarms.
Tools/Equipment	None
Prerequisite Procedures	DLP-G46 Log into CTC, page 2-25
Required/As Needed	As needed
Onsite/Remote	Onsite or remote
Security Level	Retrieve or higher

Step 1 From the card, node, or network view, click the **Conditions** tab.

Step 2 Click **Retrieve** (Figure 7-5).

The Retrieve button requests the current set of fault conditions from the node, card, or network. The window is not updated when events change on the node. You must click Retrieve to see any changes.

Figure 7-5 Node View Conditions Window

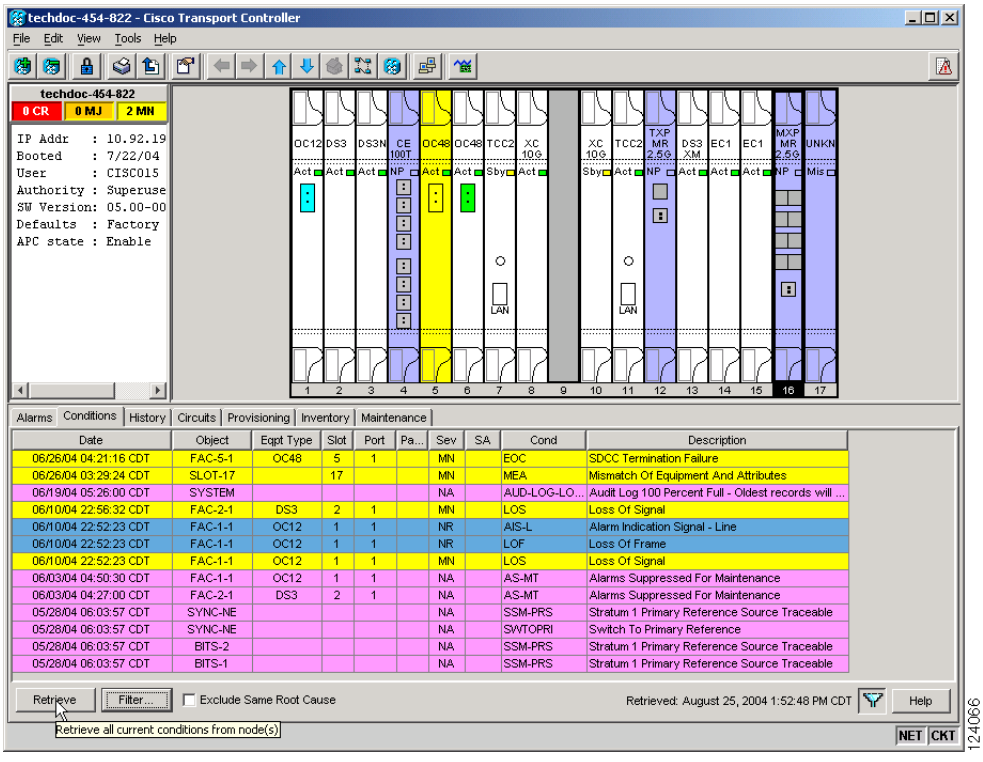

Conditions include all fault conditions raised on the node, whether or not they are reported.

Note Alarms can be unreported when they are filtered out of the display. See the "DLP-G126 Enable Alarm Filtering" task on page 7-29 for information.

Events that are reported as Major (MJ), Minor (MN), or Critical (CR) severities are alarms. Events that are reported as Not-Alarmed (NA) are conditions. Conditions that are not reported at all are marked Not-Reported (NR) in the Conditions window severity column.

Conditions that have a default severity of Critical (CR), Major (MJ), Minor (MN), or Not-Alarmed (NA) but are not reported due to exclusion or suppression are shown as NR in the Conditions window.

Note For more information about alarm suppression, see the "DLP-G129 Suppress Alarm Reporting" task on page 7-33.

Current conditions are shown with the severity chosen in the alarm profile, if used. For more information about alarm profiles, see the "NTP-G68 Create, Download, and Assign Alarm Severity Profiles" procedure on page 7-17.

Note When a port is placed in the Out-of-Service and Management, Maintenance (OOS-MA,MT) (ANSI) or Locked-enabled, maintenance (ETSI) service state, it raises an Alarms Suppressed for Maintenance (AS-MT) condition. For information about alarm and condition troubleshooting, refer to the *Cisco ONS 15454 SONET and DWDM Troubleshooting Guide*.

Step 3 If you want to apply exclusion rules, check the **Exclude Same Root Cause** check box at the node or network view, but do not check the Exclude Same Root Cause check box in card view.

An exclusion rule eliminates all lower-level alarms or conditions that originate from the same cause. For example, a fiber break may cause an LOS alarm, an AIS condition, and an SF condition. If you check the Exclude Same Root Cause check box, only the LOS alarm will appear. According to Telcordia, exclusion rules apply to a query of "all conditions from a node."

Step 4 Return to your originating procedure (NTP).

NTP-G65 Delete Cleared Alarms from Display

Purpose	Use this procedure to delete Cleared (C) status alarms from the Alarms window or transient messages from the CTC History window.
Tools/Equipment	None
Prerequisite Procedures	None
Required/As Needed	As needed
Onsite/Remote	Onsite or remote
Security Level	Retrieve or higher

Step 1 Complete the "DLP-G46 Log into CTC" task on page 2-25. If you are already logged in, continue with Step 2.

Step 2 To delete cleared node-level alarms:

a. In the node view, click the **Alarms** tab.

b. Click **Delete Cleared Alarms**.

- If the Autodelete Cleared Alarms check box is checked, an alarm disappears from the window when it is cleared.
- If the Autodelete Cleared Alarms check box is not checked, an alarm remains in the window when it is cleared. The alarm appears white in the window and has a Clear (CL) severity. The alarm can be removed by clicking the **Delete Cleared Alarms** button.

This action removes any cleared ONS 15454 alarms from the Alarms tab. The rows of cleared alarms turn white and have a C in their status (ST) column.

Step 3 To delete cleared card-level alarms:

a. In node view, double-click the card graphic for the card you want to open.

b. Click the **Alarms** tab and then click **Delete Cleared Alarms**, referring to the note in Step 2.

Step 4 To delete cleared network-level alarms:

a. In node view, click **View > Go to Network View**.

b. Click the **Alarms** tab and then click **Delete Cleared Alarms**, referring to the note in Step 2.

Step 5 To remove the transient messages from the History window, click **Delete Cleared Alarms**. Transient messages are single messages, not raise-and-clear pairs (that is, they do not have companion messages stating they are cleared).

Stop. You have completed this procedure.

NTP-G66 View Alarm-Affected Circuits

Purpose	Use this procedure to view all Optical Channel Network Connections (OCHNCs) and ONS 15454 circuits, if any, that are affected by an alarm or condition.
Tools/Equipment	None
Prerequisite Procedures	NTP-G64 View Alarms, History, Events, and Conditions, page 7-5
Required/As Needed	As needed
Onsite/Remote	Onsite or remote
Security Level	Retrieve or higher

Step 1 Complete the "DLP-G46 Log into CTC" task on page 2-25. If you are already logged in, continue with Step 2.

Step 2 In the network, node, or card view, click the **Alarms** tab or **Conditions** tab and then right-click anywhere in the row of an active alarm or condition.

Note The node view is the default, but you can also navigate to the Alarms tab in the network view or card view to perform Step 2.

The Select Affected Circuit option appears on the shortcut menu (Figure 7-6).

Figure 7-6 Select Affected Circuits Option

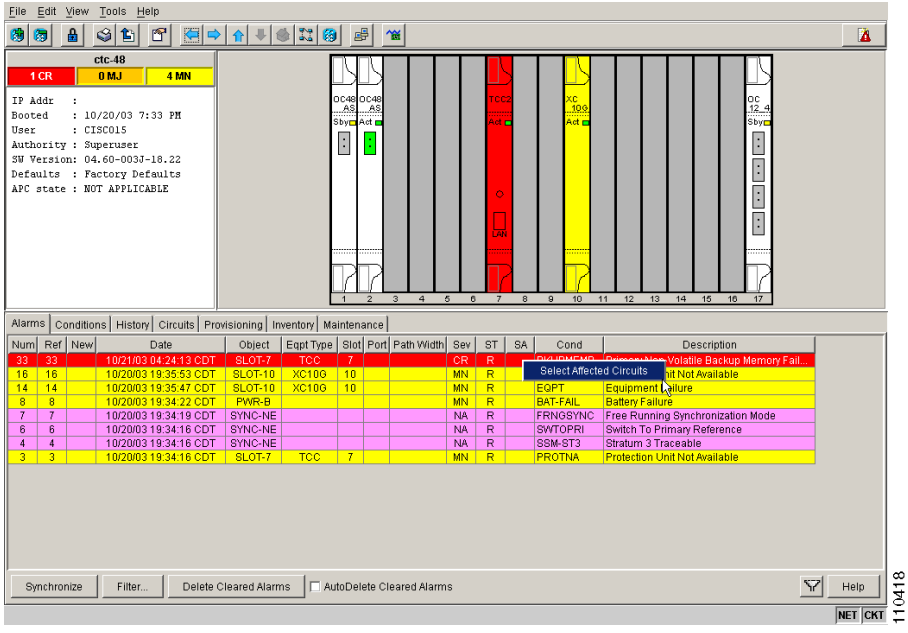

Step 3 Left-click or right-click **Select Affected Circuits**.

The **Circuits** window appears with the affected Optical Channel Network Connection (OCHNC) highlighted (Figure 7-7).

Figure 7-7 Viewing Alarm-Affected Circuits

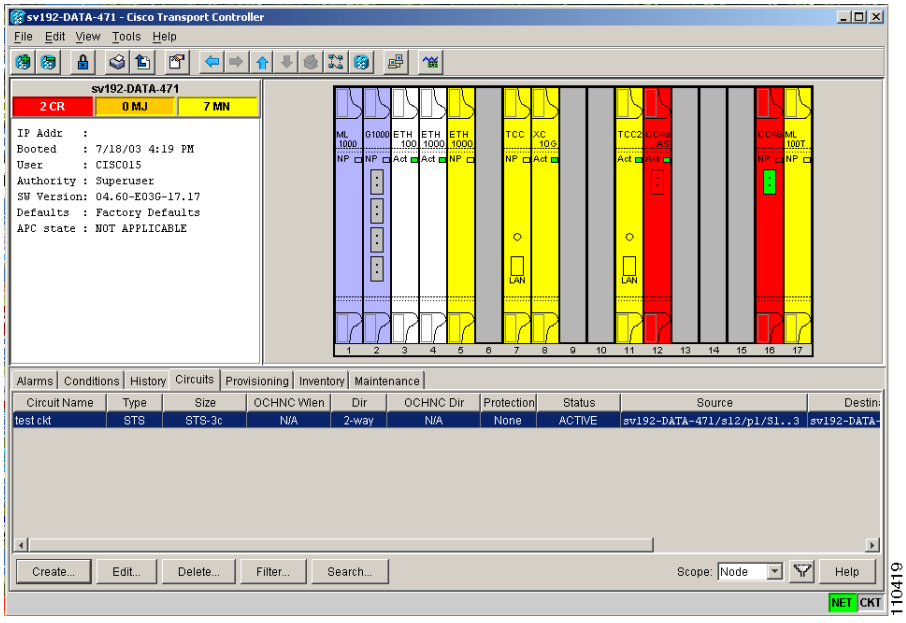

Stop. You have completed this procedure.

NTP-G67 View Alarm Counts on the LCD for a Node, Slot, or Port

Purpose	Use this procedure to view an alarm summary for a node, slot, or port without using CTC.
Tools/Equipment	None
Prerequisite Procedures	None
Required/As Needed	As needed
Onsite/Remote	Onsite
Security Level	None

Step 1 If you want to view the entire alarm summary for the node, press either the **Slot** button or **Port** button on the LCD panel until "Node" appears on the LCD. You will also see the direction, "Status=Alm Ct." This means that if you press the Status button at this time, as directed in Step 2, you will see an alarm count for the node.

Step 2 Press the **Status** button to see a summary of alarms and severities for the node. You will see a message similar to "Alm CT: 2: MJ:2 MN:2," meaning that there are two critical alarms, two major alarms, and two minor alarms.

Step 3 If you want to see alarm counts for a particular slot, such as the alarms for an OC-3 card in Slot 2, press the **Slot** button until you see "Slot-3" on the LCD. You will see the direction, "Status=Alm Ct."

Step 4 Press the **Status** button to see a summary of alarms and severities against the slot. For example, you might see "Slot-3 Alm CT:0 MJ:1 MN:2." This means that there are no critical alarms, one major alarm, and two minor alarms against the slot.

Step 5 If you want to view the alarms against a port on the card, such as Port 3 of the OC-3 card you viewed previously, press the **Port** button until you see "Port-3 Status=Alm Ct."

Step 6 Press **Status** to view alarm count against the port. You will see a message similar to "Port-3 Alm CT:0 MJ:1 MN:0." This means that there is one major alarm against this port.

Figure 7-8 shows the shelf LCD panel.

Figure 7-8 Shelf LCD Panel

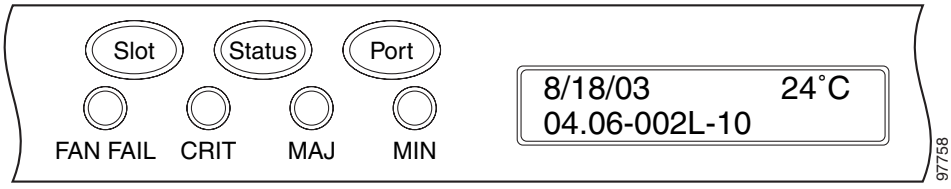

To return to the previous view from the Port screen, continue to press **Port** until the display cycles through all the ports on the slot.

To return to the node menu from the Slot screen, press **Slot** until you cycle through all the slots and see "Node."

If you do not press any buttons, the LCD will return to its default display with the node name. However, if you did not cycle through the options to return to the node status, you will see the slot or port where you last checked status.

Note A blank LCD results when the fuse on the alarm interface panel (AIP) board has blown. If this occurs, log into http://www.cisco.com/tac for more information or log into http://www.cisco.com/warp/public/687/Directory/DirTAC.shtml to obtain a directory of Cisco TAC toll-free numbers for your country.

Stop. You have completed this procedure.

NTP-G68 Create, Download, and Assign Alarm Severity Profiles

Purpose	Use this procedure to create a customized alarm profile at the network, node, or card level. This procedure also provides links to tasks that describe how to assign custom severities individually to each port, card, or node, and to delete alarm profiles.
Tools/Equipment	None
Prerequisite Procedures	None
Required/As Needed	As needed
Onsite/Remote	Onsite or remote
Security Level	Provisioning or higher

Step 1 Complete the "DLP-G46 Log into CTC" task on page 2-25 at the node where you want to create an alarm profile. If you are already logged in, continue with Step 2 to create, clone or modify an alarm profile, or go to Step 3 to download an alarm profile.

Step 2 Complete the "DLP-G121 Create a New or Cloned Alarm Severity Profile" task on page 7-18. This task clones a current alarm profile, renames the profile, and customizes the new profile.

Step 3 Complete the "DLP-G122 Download an Alarm Severity Profile" task on page 7-22. This task downloads an alarm severity profile from a CD or a node.

Note After storing a created or downloaded alarm profile, you must go to the node (either by logging into it or clicking on it from the network view) and activate the profile by applying it to the shelf, one or more cards, or one or more ports.

Step 4 As necessary, complete the "DLP-G123 Apply Alarm Profiles to Ports" task on page 7-23 or the "DLP-G124 Apply Alarm Profiles to Cards and Nodes" task on page 7-26.

Step 5 As necessary, complete the "DLP-G125 Delete Alarm Severity Profiles" task on page 7-27.

Stop. You have completed this procedure.

DLP-G121 Create a New or Cloned Alarm Severity Profile

Purpose	This task creates a custom severity profile or clones and modifies the default severity profile.
Tools/Equipment	None
Prerequisite Procedures	DLP-G46 Log into CTC, page 2-25
Required/As Needed	As needed
Onsite/Remote	Onsite or remote
Security Level	Provisioning or higher

Step 1 To access the alarm profile editor from network view, click the **Provisioning > Alarm Profiles** tabs.

Step 2 To access the profile editor from node view, click the **Provisioning > Alarm Profiles > Alarm Profile Editor** tabs.

Step 3 To access the profile editor from a card view, click the following tabs:

- If the card is an MXP, MXPP, TXP, TXPP, or WSS card, click the **Provisioning > Alarm Profiles > Alarm Profile Editor** tabs.
- If the card is an OSC-CSM card, click the **Provisioning > OC3 Line > Alarm Profiles > Alarm Profile Editor** tabs or **Provisioning > Optical Line > Alarm Profiles > Alarm Profile Editor** tabs.
- If the card is a 32MUX-O or 32DMX-O card, click the **Provisioning > Optical Line > Alarm Profiles > Alarm Profile Editor** tabs or the **Provisioning > Optical Chn > Alarm Profiles > Alarm Profile Editor** tabs.

- If the card is a 4MD card, click the **Provisioning > Optical Chn > Alarm Profiles > Alarm Profile Editor** tabs or the **Provisioning > Optical Band > Alarm Profiles > Alarm Profile Editor** tabs.
- If the card is an OPT-PRE or OPT-BST card, click the **Provisioning > Optical Line > Alarm Profiles > Alarm Profile Editor** tabs or the **Provisioning > Opt. Ampli. Line > Alarm Profiles > Alarm Profile Editor** tabs.
- If the card is an AD-1C, AD-2C, or AD-4C card, click the **Provisioning > Optical Line > Alarm Profiles > Alarm Profile Editor** tabs or the **Provisioning > Optical Chn > Alarm Profiles > Alarm Profile Editor** tabs.
- If the card is an AD-1B or AD-4B card, click the **Provisioning > Optical Line > Alarm Profiles > Alarm Profile Editor** tabs or the **Provisioning > Optical Band > Alarm Profiles > Alarm Profile Editor** tabs.

Step 4 If you want to create a new profile based on the default profile in use, click **New**. Continue with Step 10.

Step 5 If you want to create a profile using an existing profile located on the node, click **Load** and **From Node** in the Load Profiles dialog box.

a. Click the node name you are logged into in the Node Names list.

b. Click the name of an existing profile in the Profile Names list, such as **Default**. Continue with Step 7.

Step 6 If you want to create a profile using an existing profile located in a file that is stored locally or on a network drive, click **From File** in the Load Profiles dialog box.

a. Click **Browse**.

b. Navigate to the file location in the **Open** dialog box.

c. Click **Open**.

Note The Default alarm profile list contains alarm and condition severities that correspond when applicable to default values established in Telcordia GR-253-CORE.

Note All default or user-defined severity settings that are Critical (CR) or Major (MJ) are demoted to Minor (MN) in Non-Service-Affecting (NSA) situations as defined in Telcordia GR-474.

Step 7 Click **OK**.

The alarm severity profile appears in the Alarm Profiles window.

Note The alarm profile list contains a master list of alarms that is used for a mixed node network. Some of these alarms might not be used in all ONS nodes.

Step 8 Right-click anywhere in the profile column to view the profile editing shortcut menu. (Refer to Step 11 for further information about the Default profile.)

Step 9 Click **Clone** in the shortcut menu.

Tip To see the full list of profiles, including those available for loading or cloning, click Available. You must load a profile before you can clone it.

Step 10 In the New Profile or Clone Profile dialog box, enter a name in the New Profile Name field.

Profile names must be unique. If you try to import or name a profile that has the same name as another profile, CTC adds a suffix to create a new name. Long file names are supported.

Step 11 Click **OK**.

A new alarm profile (named in Step 10) is created. This profile duplicates the default profile severities and appears at the right of the previous profile column in the Alarm Profiles window. You can select it and drag it to a different position.

Note Up to 10 profiles, including the two reserved profiles, Inherited and Default, can be stored in CTC.

The Default profile sets severities to standard Telcordia GR-253-CORE settings. If an alarm has an Inherited profile, it inherits (copies) its severity from the same alarm's severity at the higher level. For example, if you choose the Inherited profile from the network view, the severities at the lower levels (node, card, and port) will be copied from this selection. A card with an Inherited alarm profile copies the severities used by the node that contains the card. (If you are creating profiles, you can apply these separately at any level. To do this, refer to the "DLP-G124 Apply Alarm Profiles to Cards and Nodes" task on page 7-26.)

Step 12 Modify (customize) the new alarm profile:

a. In the new alarm profile column, click the alarm severity you want to change in the custom profile.

b. Choose a severity from the drop-down list.

c. Repeat Steps a and b for each severity you want to customize. Refer to the following guidelines when you view the alarms or conditions after making modifications:

- All Critical (CR) or Major (MJ) default or user-defined severity settings are demoted to Minor (MN) in Non-Service-Affecting (NSA) situations as defined in Telcordia GR-474.
- Default severities are used for all alarms and conditions until you create and apply a new profile.
- Changing a severity to inherited (I) or unset (U) does not change the severity of the alarm.

Step 13 After you have customized the new alarm profile, right-click the profile column to highlight it.

Step 14 Click **Store**.

Step 15 In the Store Profiles dialog box, click **To Node(s)** and go to Step a or click **To File** and go to Step b (Figure 7-9).

Figure 7-9 Store Profiles Dialog Box

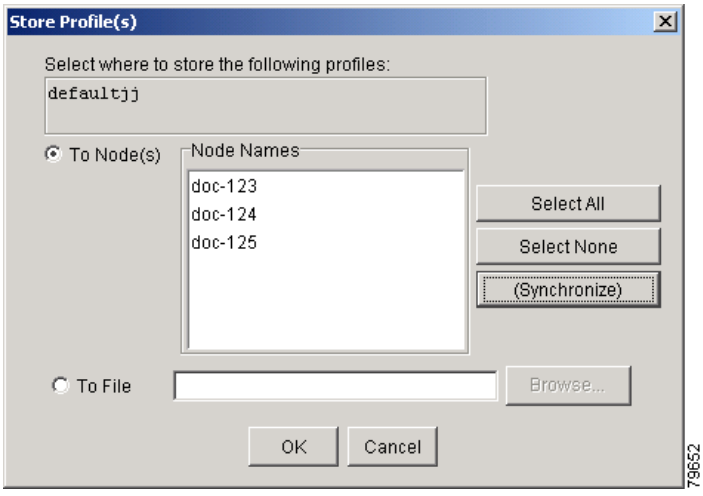

a. Choose the node where you want to save the profile:

- If you want to save the profile to only one node, click the node in the Node Names list.
- If you want to save the profile to all nodes, click **Select All**.
- If you do not want to save the profile to any nodes, click **Select None**.
- If you want to update alarm profile information, click **(Synchronize)**.

b. Save the profile:

- Click **Browse** and navigate to the profile save location.
- Enter a name in the File name field.
- Click **Select** to choose this name and location.

Note Long file names are supported. CTC supplies a suffix of *.pfl to stored files.

- Click **OK** to store the profile.

Note Click the **Hide Identical Rows** check box to configure the Alarm Profiles window to view rows with dissimilar severities.

Note Click the **Hide Reference Values** check box to configure the Alarm Profiles window to view severities that do not match the Default profile.

Note Click the **Only show service-affecting severities** check box to configure the Alarm Profiles window not to display Minor and some Major alarms that will not affect service.

Step 16 Return to your originating procedure (NTP).

DLP-G122 Download an Alarm Severity Profile

Purpose	This task downloads a custom alarm severity profile from a network-drive accessible CD-ROM, floppy disk, or hard disk location.
Tools/Equipment	None
Prerequisite Procedures	DLP-G46 Log into CTC, page 2-25
Required/As Needed	As needed
Onsite/Remote	Onsite or remote
Security Level	Provisioning or higher

Step 1 To access the alarm profile editor from network view, click the **Provisioning > Alarm Profiles** tabs.

Step 2 To access the profile editor from node view, click the **Provisioning > Alarm Profiles > Alarm Profile Editor** tabs.

Step 3 To access the profile editor from a card view, click the following tabs:

- If the card is an MXP, MXPP, TXP, TXPP, or WSS card, click the **Provisioning > Alarm Profiles > Alarm Profile Editor** tabs.
- If the card is an OSC-CSM card, click the **Provisioning > OC3 Line > Alarm Profiles > Alarm Profile Editor** tabs or the **Provisioning > Optical Line > Alarm Profiles > Alarm Profile Editor** tabs.
- If the card is a 32MUX-O or 32DMX-O card, click the **Provisioning > Optical Line > Alarm Profiles > Alarm Profile Editor** tabs or the **Provisioning > Optical Chn > Alarm Profiles > Alarm Profile Editor** tabs.
- If the card is a 4MD card, click the **Provisioning > Optical Chn > Alarm Profiles > Alarm Profile Editor** tabs or the **Provisioning > Optical Band > Alarm Profiles > Alarm Profile Editor** tabs.
- If the card is an OPT-PRE or OPT-BST card, click the **Provisioning > Optical Line > Alarm Profiles > Alarm Profile Editor** tabs or the **Provisioning > Opt. Ampli. Line > Alarm Profiles > Alarm Profile Editor** tabs.
- If the card is an AD-1C, AD-2C, or AD-4C card, click the **Provisioning > Optical Line > Alarm Profiles > Alarm Profile Editor** tabs or the **Provisioning > Optical Chn > Alarm Profiles > Alarm Profile Editor** tabs.
- If the card is an AD-1B or AD-4B card, click the **Provisioning > Optical Line > Alarm Profiles > Alarm Profile Editor** tabs or the **Provisioning > Optical Band > Alarm Profiles > Alarm Profile Editor** tabs.

Step 4 Click **Load**.

Step 5 If you want to download a profile that exists on the node, click **From Node** in the Load Profiles dialog box.

a. Click the node name you are logged into in the Node Names list.

b. Click the name of the profile in the Profile Names list, such as **Default**.

Step 6 If you want to download a profile that is stored locally or on a network drive, click **From File** in the Load Profile dialog box.

a. Click **Browse**.

b. Navigate to the file location in the **Open** dialog box.

c. Click **Open**.

Note The Default alarm profile list contains alarm and condition severities that correspond when applicable to default values established in Telcordia GR-253-CORE.

Note All default or user-defined severity settings that are Critical (CR) or Major (MJ) are demoted to Minor (MN) in Non-Service-Affecting (NSA) situations as defined in Telcordia GR-474.

Step 7 Click **OK**.

The downloaded profile appears at the right side of the Alarm Profiles window.

Step 8 Right-click anywhere in the downloaded profile column to view the profile editing shortcut menu.

Step 9 Click **Store**.

Step 10 In the Store Profiles dialog box, click **To Node(s)**.

a. Choose the nodes where you want to save the profile:

- If you want to save the profile to only one node, click the node in the Node Names list.
- If you want to save the profile to all nodes, click **Select All**.
- If you do not want to save the profile to any nodes, click **Select None**.
- If you want to update alarm profile information, click **Synchronize**.

b. Click **OK**.

Step 11 Return to your originating procedure (NTP).

DLP-G123 Apply Alarm Profiles to Ports

Purpose	This task applies a custom or default alarm severity profile to a port or ports.
Tools/Equipment	None
Prerequisite Procedures	DLP-G121 Create a New or Cloned Alarm Severity Profile, page 7-18 DLP-G46 Log into CTC, page 2-25
Required/As Needed	As needed
Onsite/Remote	Onsite or remote
Security Level	Provisioning or higher

Step 1 In the node view, double-click a card to open the card view.

Note You can also apply alarm profiles to cards using the "DLP-G124 Apply Alarm Profiles to Cards and Nodes" task on page 7-26.

Note The card view is not available for the TCC2 card.

Step 2 Depending on which card you want to apply the profile to, click the following tabs:

- If the card is an MXP, MXPP, TXP, TXPP, or WSS card, click the **Provisioning > Alarm Profiles > Alarm Profile Editor** tabs.
- If the card is an OSC-CSM card, click the **Provisioning > OC3 Line > Alarm Profiles > Alarm Profiles** tabs or the **Provisioning > Optical Line > Alarm Profiles > Alarm Profiles** tabs.
- If the card is a 32MUX-O or 32DMX-O card, click the **Provisioning > Optical Line > Alarm Profiles > Alarm Profiles** tabs or the **Provisioning > Optical Chn > Alarm Profiles > Alarm Profiles** tabs.
- If the card is a 4MD card, click the **Provisioning > Optical Chn > Alarm Profiles > Alarm Profiles** tabs or the **Provisioning > Optical Band > Alarm Profiles > Alarm Profiles** tabs.
- If the card is an OPT-PRE or OPT-BST card, click the **Provisioning > Optical Line > Alarm Profiles > Alarm Profiles** tabs or the **Provisioning > Opt. Ampli. Line > Alarm Profiles > Alarm Profiles** tabs.
- If the card is an AD-1C, AD-2C, or AD-4C card, click the **Provisioning > Optical Line > Alarm Profiles > Alarm Profiles** tabs or the **Provisioning > Optical Chn > Alarm Profiles > Alarm Profiles** tabs.
- If the card is an AD-1B or AD-4B card, click the **Provisioning > Optical Line > Alarm Profiles > Alarm Profiles** tabs or the **Provisioning > Optical Band > Alarm Profiles > Alarm Profiles** tabs.

Figure 7-10 shows the alarm profile of Ethernet card ports. CTC shows Parent Card Profile: Inherited.

Figure 7-10 AD-1C Card Alarm Profile

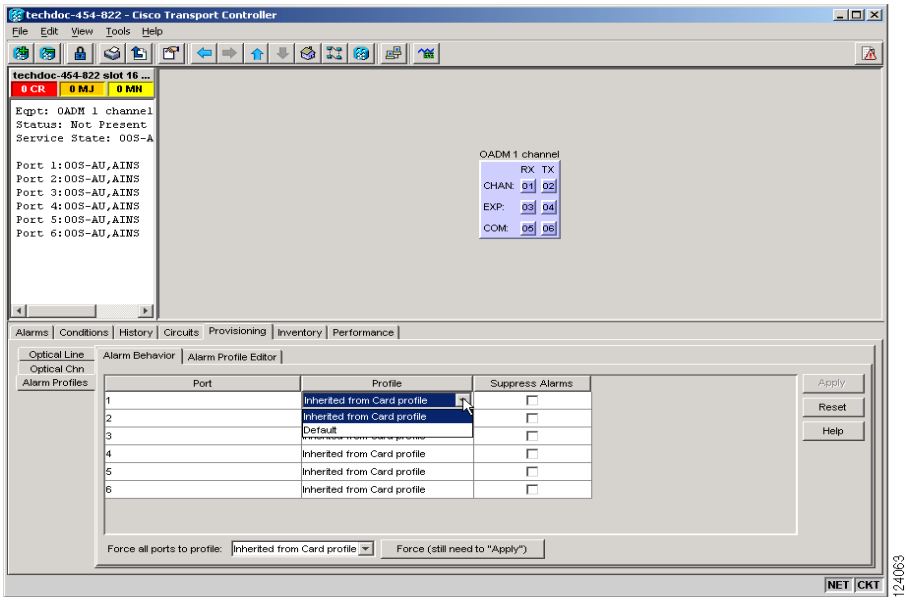

Go to Step 3 to apply profiles to a port. Go to Step 4 to apply profiles to all ports on a card.

Step 3 To apply profiles on a port basis:

a. In card view, click the port row in the Profile column.

b. Choose the new profile from the drop-down list.

c. Click **Apply**.

Step 4 To apply profiles to all ports on a card:

a. In card view, click the **Force all ports to profile** drop-down arrow at the bottom of the window.

b. Choose the new profile from the drop-down list.

c. Click **Force (still need to "Apply")**.

d. Click **Apply**.

In node view the Port Level Profiles column indicates port-level profiles with a notation such as "exist (1)" (Figure 7-11 on page 7-26).

Step 5 To reapply a previous alarm profile after you have applied a new one, select the previous profile and click **Apply** again.

Step 6 Return to your originating procedure (NTP).

DLP-G124 Apply Alarm Profiles to Cards and Nodes

Purpose	This task applies a custom or default alarm profile to cards or nodes.
Tools/Equipment	None
Prerequisite Procedures	DLP-G121 Create a New or Cloned Alarm Severity Profile, page 7-18 DLP-G46 Log into CTC, page 2-25
Required/As Needed	As needed
Onsite/Remote	Onsite or remote
Security Level	Provisioning or higher

Step 1 In node view, click the **Provisioning > Alarm Profiles > Alarm Behavior** tab (Figure 7-11).

Figure 7-11 Node View Alarm Profile

Step 2 To apply profiles to a card:

a. Click a selection from the Profile column for the card.

b. Choose the new profile from the drop-down list.

c. Click **Apply**.

Step 3 To apply the profile to an entire node:

a. Click the **Node Profile** drop-down arrow at the bottom of the window (Figure 7-11).

b. Choose the new alarm profile from the drop-down list.

c. Click **Apply**.

Step 4 To reapply a previous alarm profile after you have applied a new one, select the previous profile and click **Apply** again.

Step 5 Return to your originating procedure (NTP).

DLP-G125 Delete Alarm Severity Profiles

Purpose	This task deletes a custom or default alarm severity profile.
Tools/Equipment	None
Prerequisite Procedures	DLP-G46 Log into CTC, page 2-25
Required/As Needed	As needed
Onsite/Remote	Onsite or remote
Security Level	Provisioning or higher

Step 1 To access the alarm profile editor from network view, click the **Provisioning > Alarm Profiles** tabs.

Step 2 To access the profile editor from node view, click the **Provisioning > Alarm Profiles > Alarm Profile Editor** tabs.

Step 3 To access the profile editor from a card view, click the following tabs:

- If the card is an MXP, MXPP, TXP, TXPP, or WSS card, click the **Provisioning > Alarm Profiles > Alarm Profile Editor** tabs.
- If the card is an OSC-CSM card, click the **Provisioning > OC3 Line > Alarm Profiles > Alarm Profile Editor** tabs or **Provisioning > Optical Line > Alarm Profiles > Alarm Profile Editor** tabs.
- If the card is a 32MUX-O or 32DMX-O card, click the **Provisioning > Optical Line > Alarm Profiles >Alarm Profile Editor** tabs or the **Provisioning > Optical Chn > Alarm Profiles > Alarm Profile Editor** tabs.
- If the card is a 4MD card, click the **Provisioning > Optical Chn > Alarm Profiles > Alarm Profile Editor** tabs or the **Provisioning > Optical Band > Alarm Profiles > Alarm Profile Editor** tabs.
- If the card is an OPT-PRE or OPT-BST card, click the **Provisioning > Optical Line > Alarm Profiles > Alarm Profile Editor** tabs or the **Provisioning > Opt. Ampli. Line > Alarm Profiles > Alarm Profile Editor** tabs.
- If the card is an AD-1C, AD-2C, or AD-4C card, click the **Provisioning > Optical Line > Alarm Profiles > Alarm Profile Editor** tabs or the **Provisioning > Optical Chn > Alarm Profiles > Alarm Profile Editor** tabs.
- If the card is an AD-1B or AD-4B card, click the **Provisioning > Optical Line > Alarm Profiles > Alarm Profile Editor** tabs or the **Provisioning > Optical Band > Alarm Profiles > Alarm Profile Editor** tabs.

Step 4 Click the profile you are deleting to select it.

Step 5 Click **Delete**.

The Select Node/Profile Combination for Delete dialog box appears (Figure 7-12).

Figure 7-12 Select Node/Profile Combination For Delete Dialog Box

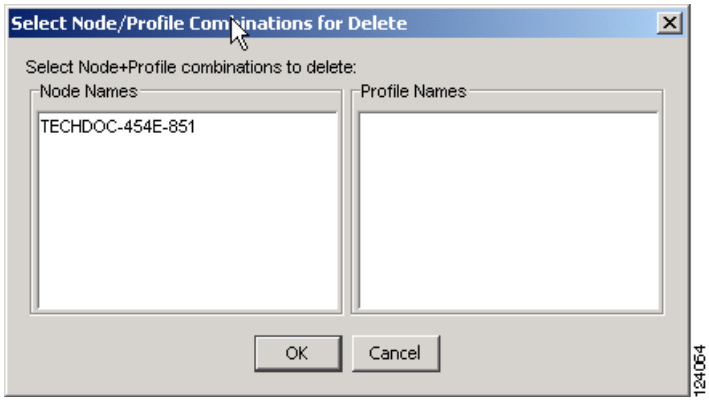

Note You cannot delete the Inherited or Default alarm profiles.

Note A previously created alarm profile cannot be deleted unless it has been stored on the node. If the profile is visible on the Alarm Profiles tab but is not listed in the Select Node/Profile Combinations to Delete dialog box, continue with Step 10.

Step 6 Click the node names in the Node Names list to highlight the profile location.

Tip If you hold the Shift key down, you can select consecutive node names. If you hold the Ctrl key down, you can select any combination of nodes.

Step 7 Click the profile names you want to delete in the Profile Names list.

Step 8 Click **OK**.

Step 9 Click **Yes** in the Delete Alarm Profile dialog box.

Note If you delete a profile from a node, it still appears in the network view Provisioning > Alarm Profile Editor window unless you remove it using the following step.

Step 10 To remove the alarm profile from the window, right-click the column of the profile you deleted and choose **Remove** from the shortcut menu.

Note If a node and profile combination is selected but does not exist, a warning appears: "One or more of the profiles selected do not exist on one or more of the node(s) selected." For example, if node A has only profile 1 stored and the user tries to delete both profile 1 and profile 2 from node A, this warning appears. However, the operation still removes profile 1 from node A.

Note The Default and Inherited special profiles cannot be deleted and do not appear in the Select Node/Profile Combination for Delete Window.

Step 11 Return to your originating procedure (NTP).

NTP-G69 Enable, Modify, or Disable Alarm Severity Filtering

Purpose	Use this procedure to start, change, or stop alarm filtering for one or more severities in the Alarms, Conditions, and History windows in all network nodes.
Tools/Equipment	None
Prerequisite Procedures	None
Required/As Needed	As needed
Onsite/Remote	Onsite or remote
Security Level	Retrieve or higher

Step 1 Complete the "DLP-G46 Log into CTC" task on page 2-25 at the node where you want to enable alarm severity filtering. If you are already logged in, continue with Step 2.

Step 2 As needed, complete the "DLP-G126 Enable Alarm Filtering" task on page 7-29. This task enables alarm filtering at the card, node, and network views for all nodes in the network. Alarm filtering can be enabled for alarms, conditions, or events.

Step 3 As needed, complete the "DLP-G127 Modify Alarm, Condition, and History Filtering Parameters" task on page 7-30 to modify the alarm filtering for network nodes to show or hide particular alarms or conditions.

Step 4 As needed, complete the "DLP-G128 Disable Alarm Filtering" task on page 7-32 to disable alarm profile filtering for all network nodes.

Stop. You have completed this procedure.

DLP-G126 Enable Alarm Filtering

Purpose	This task enables alarm filtering for alarms, conditions, or event history in all network nodes.
Tools/Equipment	None
Prerequisite Procedures	DLP-G46 Log into CTC, page 2-25
Required/As Needed	As needed
Onsite/Remote	Onsite or remote
Security Level	Retrieve or higher

Step 1 At the node, network, or card view, click the **Alarms** tab.

Step 2 Click the **Filter** tool on the left side of the bottom toolbar.

Alarm filtering is enabled if the tool is selected and disabled if the tool is raised (not selected).

Alarm filtering will be enabled in the card, node, and network views of the Alarms tab at the node and for all other nodes in the network. If, for example, the Alarm Filter tool is enabled in the Alarms tab of the node view at one node, the Alarms tab in the network view and card view of that node will also show the tool enabled. All other nodes in the network will also have the tool enabled.

If you filter an alarm in card view, the alarm will still be displayed in node view. In this view, the card will display the color of the highest-level alarm. The alarm is also shown for the node in the network view.

Step 3 If you want alarm filtering enabled when you view conditions, repeat Steps 1 and 2 using the Conditions window.

Step 4 If you want alarm filtering enabled when you view alarm history, repeat Steps 1 and 2 using the History window.

Step 5 Return to your originating procedure (NTP).

DLP-G127 Modify Alarm, Condition, and History Filtering Parameters

Purpose	This task changes alarm and condition reporting in all network nodes.
Tools/Equipment	None
Prerequisite Procedures	DLP-G126 Enable Alarm Filtering, page 7-29 DLP-G46 Log into CTC, page 2-25
Required/As Needed	As needed
Onsite/Remote	Onsite or remote
Security Level	Retrieve or higher

Step 1 At the node, network, or card view, click the **Alarms** tab, **Conditions** tab, or **History** tab.

Step 2 Click the **Filter** button on the left side of the bottom toolbar.

The filter dialog box appears, displaying the General tab. Figure 7-13 shows the Alarm Filter dialog box; the Conditions and History tabs have similar dialog boxes.

Figure 7-13 Alarm Filter Dialog Box General Tab

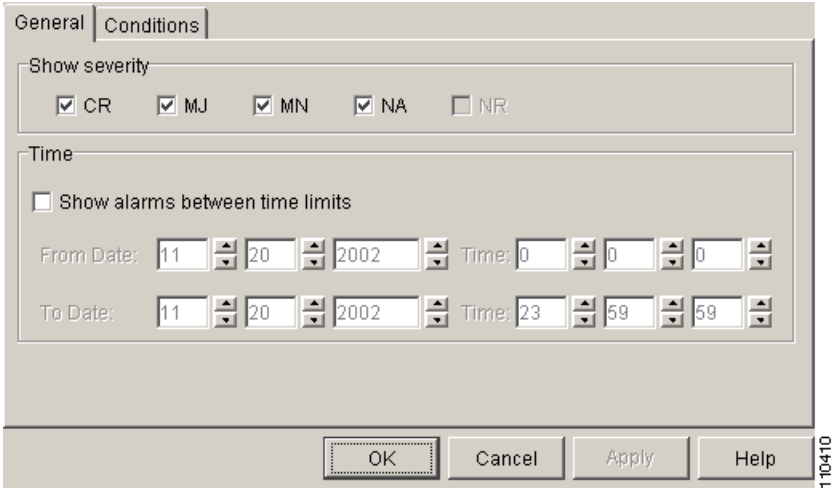

In the General tab Show Severity box, you can choose which alarm severities will show through the alarm filter and provision a time period during which filtered alarms show through the filter. To change the alarm severities shown in the filter, go to Step 3. To change the time period filter for the alarms, go to Step 4.

Step 3 In the Show Severity area, click the check boxes for the severities [Critical (CR), Major (MJ), Minor (MN), or Not-Alarmed (NA)] you want to be reported at the network level. Leave severity check boxes deselected (unchecked) to prevent those severities from appearing.

When alarm filtering is disabled, all alarms show.

Step 4 In the Time area, click the **Show alarms between time limits** check box to enable it. Click the up and down arrows in the From Date, To Date, and Time fields to modify what period of alarms are shown.

To modify filter parameters for conditions, continue with Step 5. If you do not need to modify them, continue with Step 6.

Step 5 Click the filter dialog box **Conditions** tab (Figure 7-14).

Figure 7-14 Alarm Filter Dialog Box Conditions Tab

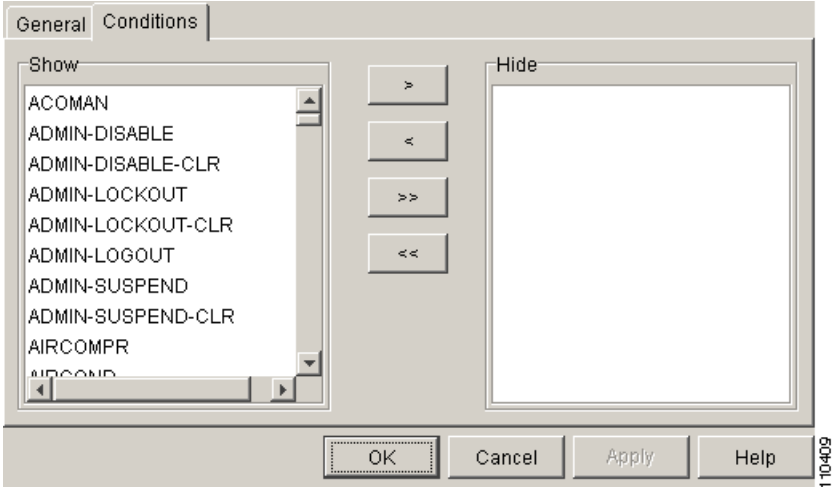

When filtering is enabled, conditions in the Show list are visible and conditions in the Hide list are invisible.

- To move conditions individually from the Show list to the Hide list, click the > button.
- To move conditions individually from the Hide list to the Show list, click the < button.
- To move conditions collectively from the Show list to the Hide list, click the >> button.
- To move conditions collectively from the Hide list to the Show list, click the << button.

Note Conditions include alarms.

Step 6 Click **Apply** and **OK**.

Alarm and condition filtering parameters are enforced when alarm filtering is enabled (see the "DLP-G126 Enable Alarm Filtering" task on page 7-29), and are not enforced when alarm filtering is disabled (see the "DLP-G128 Disable Alarm Filtering" task on page 7-32).

Step 7 Return to your originating procedure (NTP).

DLP-G128 Disable Alarm Filtering

Purpose	This task turns off specialized alarm filtering in all network nodes so that all severities are reported in CTC.
Tools/Equipment	None
Prerequisite Procedures	DLP-G126 Enable Alarm Filtering, page 7-29 DLP-G46 Log into CTC, page 2-25
Required/As Needed	As needed
Onsite/Remote	Onsite or remote
Security Level	Retrieve or higher

Step 1 At the node, network, or card view, click the **Alarms** tab.

Step 2 Click the **Filter** tool on the right side of the bottom toolbar.

Alarm filtering is enabled if the tool is indented and disabled if the tool is raised (not selected).

Step 3 If you want alarm filtering disabled when you view conditions, click the **Conditions** tab and click the Filter tool.

Step 4 If you want alarm filtering disabled when you view alarm history, click the **History** tab and click the Filter tool.

Step 5 Return to your originating procedure (NTP).

NTP-G70 Suppress Alarms or Discontinue Alarm Suppression

Purpose	Use this procedure to prevent alarms from being reported for a port, card, or node in circumstances when an alarm or condition is known to exist but you do not want to include it in the display. This procedure also provides a link to a task that explains how to resume normal alarm reporting by discontinuing the suppression.
Tools/Equipment	None
Prerequisite Procedures	None
Required/As Needed	As needed
Onsite/Remote	Onsite or remote
Security Level	Provisioning or higher

Step 1 Complete the "DLP-G46 Log into CTC" task on page 2-25. If you are already logged in, continue with Step 2.

Step 2 Complete the "DLP-G129 Suppress Alarm Reporting" task on page 7-33 to enable the node to send autonomous messages that clear specific raised alarms and cause suppressed alarms to appear in the Conditions window.

Note Suppressing one or more alarms prevents them from appearing in Alarm or History windows or in any other clients. The suppress command causes CTC to display them in the Conditions window with their severity, their severity color code, and service-affecting status.

Step 3 Complete the "DLP-G130 Discontinue Alarm Suppression" task on page 7-35 to discontinue alarm suppression and resume normal alarm reporting.

Stop. You have completed this procedure.

DLP-G129 Suppress Alarm Reporting

Purpose	This task suppresses the reporting of ONS 15454 alarms at the node, card, or port level.
Tools/Equipment	None
Prerequisite Procedures	DLP-G46 Log into CTC, page 2-25
Required/As Needed	As needed
Onsite/Remote	Onsite or remote
Security Level	Provisioning or higher

Caution If multiple CTC/TL1 sessions are open, suppressing alarms in one session suppresses the alarms in all other open sessions.

Note Alarm suppression at the node level does not supersede alarm suppression at the card or port level. Suppression can exist independently for all three entities, and each entity will raise separate alarms suppressed by the user command (AS-CMD) alarm.

Step 1 If you are in node view, click the **Provisioning > Alarm Profiles > Alarm Profiles** tabs.

Step 2 To suppress alarms for the entire node:

a. Check the **Suppress Alarms** check box.

b. Click **Apply**.

All raised alarms for the node will change color to white in the Alarms window and their status will change to cleared. After suppressing alarms, clicking **Synchronize** in the Alarms window will remove cleared alarms from the window. However, an AS-CMD alarm will show in node or card view to indicate that node-level alarms were suppressed, and the word System will appear in the Object column.

Note The only way to suppress BITS, power source, or system alarms is to suppress alarms for the entire node. These cannot be suppressed separately.

Step 3 To suppress alarms for individual cards:

a. Locate the card row (using the Location column for the slot number or the Eqpt Type column for the equipment name).

b. Check the **Suppress Alarms column** check box on that row.

Alarms that directly apply to this card will change appearance as described in Step 2. For example, if you suppressed raised alarms for an OC-48 card in Slot 16, raised alarms for this card will change in node or card view. The AS-CMD alarm will show the slot number in the Object number. For example, if you suppressed alarms for a Slot 16 OC-48 card, the AS-CMD object will be “SLOT-16.”

Click **Apply**.

Step 4 To suppress alarms for individual card ports, double-click the card in node view.

Step 5 Depending on which card ports you want to suppress alarm reporting on, click the following tabs:

- If the card is an MXP, MXPP, TXP, TXPP, or WSS card, click the **Provisioning > Alarm Profiles > Alarm Profile Editor** tabs.
- If the card is an OSC-CSM card, click the **Provisioning > OC3 Line > Alarm Profiles > Alarm Profiles** tabs or the **Provisioning > Optical Line > Alarm Profiles > Alarm Profiles** tabs.
- If the card is a 32MUX-O or 32DMX-O card, click the **Provisioning > Optical Line > Alarm Profiles > Alarm Profiles** tabs or the **Provisioning > Optical Chn > Alarm Profiles > Alarm Profiles** tabs.
- If the card is a 4MD card, click the **Provisioning > Optical Chn > Alarm Profiles > Alarm Profiles** tabs or the **Provisioning > Optical Band > Alarm Profiles > Alarm Profiles** tabs.
- If the card is an OPT-PRE or OPT-BST card, click the **Provisioning > Optical Line > Alarm Profiles > Alarm Profiles** tabs or the **Provisioning > Opt. Ampli. Line > Alarm Profiles > Alarm Profiles** tabs.
- If the card is an AD-1C, AD-2C, or AD-4C card, click the **Provisioning > Optical Line > Alarm Profiles > Alarm Profiles** tabs or the **Provisioning > Optical Chn > Alarm Profiles > Alarm Profiles** tabs.

- If the card is an AD-1B or AD-4B card, click the **Provisioning > Optical Line > Alarm Profiles > Alarm Profiles** tabs or the **Provisioning > Optical Band > Alarm Profiles > Alarm Profiles** tabs.

Step 6 Check the **Suppress Alarms** column check box for the port row where you want to suppress alarms (Figure 7-10 on page 7-25).

Step 7 Click **Apply**.

Alarms that apply directly to this port will change appearance as described in Step 2. (However, alarms raised on the entire card will remain raised.) A raised AS-CMD alarm that shows the port as its object will appear in either alarm window. For example, if you suppressed alarms for Port 1 on the Slot 16 OC-48 card, the alarm object will show "FAC-16-1."

Step 8 Return to your originating procedure (NTP).

DLP-G130 Discontinue Alarm Suppression

Purpose	This task discontinues alarm suppression and reenables alarm reporting on a port, card, or node.
Tools/Equipment	None
Prerequisite Procedures	DLP-G129 Suppress Alarm Reporting, page 7-33 DLP-G46 Log into CTC, page 2-25
Required/As Needed	As needed
Onsite/Remote	Onsite or remote
Security Level	Provisioning or higher

Caution If multiple CTC sessions are open, discontinuing suppression in one session will discontinue suppression in all other open sessions.

Step 1 To discontinue alarm suppression for the entire node:

a. In node view, click the **Provisioning > Alarm Profiles > Alarm Profiles** tab.

b. Uncheck the **Suppress Alarms** check box.

Suppressed alarms will reappear in the Alarms window. (They might have previously been cleared from the window using the Synchronize button.) The AS-CMD alarm with the System object will be cleared in all views.

Step 2 To discontinue alarm suppression for individual cards:

a. In the node view, click the **Provisioning > Alarm Profiles > Alarm Profiles** tabs.

b. Locate the card that was suppressed in the slot list.

c. Uncheck the Suppress Alarms column check box for that slot.

d. Click **Apply**.

Suppressed alarms will reappear in the Alarms window. (They might have previously been cleared from the window using the Synchronize button.) The AS-CMD alarm with the slot object (for example, SLOT-16) will be cleared in all views.

Step 3 To discontinue alarm suppression for ports, click the following tabs:

- If the card is an MXP, MXPP, TXP, TXPP, or WSS card, click the **Provisioning > Alarm Profiles > Alarm Profile Editor** tabs.
- If the card is an OSC-CSM card, click the **Provisioning > OC3 Line > Alarm Profiles > Alarm Profiles** tabs or the **Provisioning > Optical Line > Alarm Profiles > Alarm Profiles** tabs.
- If the card is a 32MUX-O or 32DMX-O card, click the **Provisioning > Optical Line > Alarm Profiles > Alarm Profiles** tabs or the **Provisioning > Optical Chn > Alarm Profiles > Alarm Profiles** tabs.
- If the card is a 4MD card, click the **Provisioning > Optical Chn > Alarm Profiles > Alarm Profiles** tabs or the **Provisioning > Optical Band > Alarm Profiles > Alarm Profiles** tabs.
- If the card is an OPT-PRE or OPT-BST card, click the **Provisioning > Optical Line > Alarm Profiles > Alarm Profiles** tabs or the **Provisioning > Opt. Ampli. Line > Alarm Profiles > Alarm Profiles** tabs.
- If the card is an AD-1C, AD-2C, or AD-4C card, click the **Provisioning > Optical Line > Alarm Profiles > Alarm Profiles** tabs or the **Provisioning > Optical Chn > Alarm Profiles > Alarm Profiles** tabs.
- If the card is an AD-1B or AD-4B card, click the **Provisioning > Optical Line > Alarm Profiles > Alarm Profiles** tabs or the **Provisioning > Optical Band > Alarm Profiles > Alarm Profiles** tabs.

Step 4 Uncheck the **Suppress Alarms** check box for the port(s) you no longer want to suppress.

Step 5 Click **Apply**.

Suppressed alarms will reappear in the Alarms window. (They might have previously been cleared from the window using the Synchronize button.) The AS-CMD alarm with the port object (for example, FAC-16-1) will be cleared in all views.

Step 6 Return to your originating procedure (NTP).

NTP-G71 Provision External Alarms and Controls on the Alarm Interface Controller Card

Purpose	Use this procedure to create external (environmental) alarms and external controls on the Alarm Interface Controller (AIC). The AIC is not compatible with the ONS 15454 ETSI shelf.
Tools/Equipment	An AIC card must be installed in Slot 9.
Prerequisite Procedures	DLP-G34 Install the AIC or AIC-I Card, page 1-76
Required/As Needed	As needed
Onsite/Remote	Onsite or remote
Security Level	Provisioning or higher

Note For information about the AIC external alarms and controls, virtual wire, and orderwire, refer to the "14.2.2 AIC Card" section on page 14-14 and the "20.7 External Alarms and Controls" section on page 20-13.

Step 1 Verify the backplane wiring. See the "NTP-G10 Attach Wires to Alarm, Timing, LAN, and Craft Pin Connections" procedure on page 1-47 for information about the ONS 15454 ANSI backplane pins.

a. For external alarms, verify that the external-device relays are wired to the ENVIR ALARMS IN backplane pins.

b. For external controls, verify that the external relays are wired to the ENVIR ALARMS OUT backplane pins.

Step 2 Complete the "DLP-G46 Log into CTC" task on page 2-25. If you are already logged in, continue with Step 4.

Step 3 In the node view, double-click the AIC card on the shelf graphic. The card view appears.

Step 4 If you are provisioning external alarms, click the **Provisioning > External Alarms** tab (Figure 7-15). If you are not provisioning external alarms, skip Steps 5 through 7 and continue with Step 8.

Figure 7-15 AIC Card External Alarms

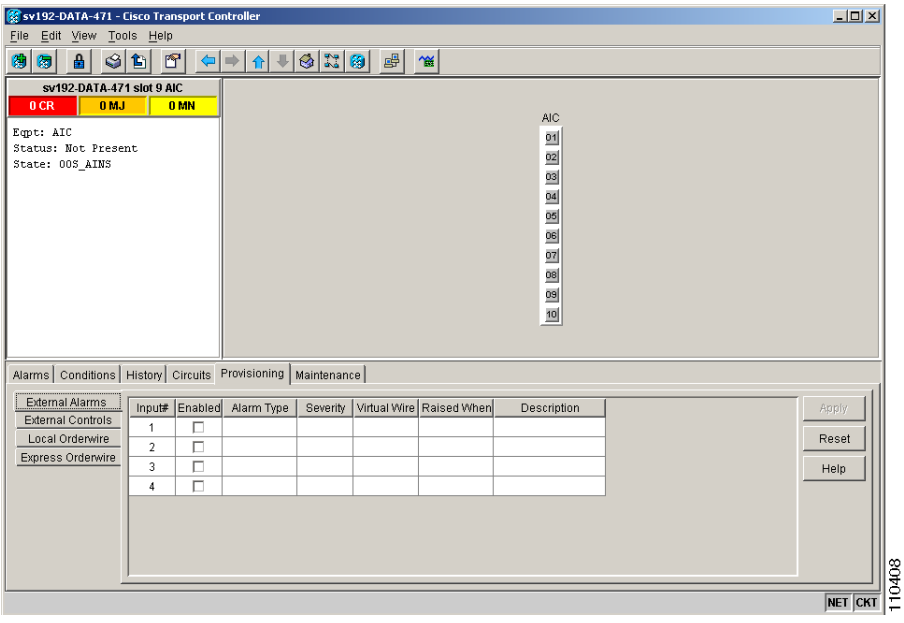

Step 5 Complete the following fields for each external device wired to the ONS 15454 backplane:

- Enabled—Check the check box to activate the fields for the alarm input number.
- Alarm Type—Choose an alarm type from the drop-down list.
- Severity—Choose a severity from the drop-down list.

  The severity you choose determines the external alarm's severity in the Alarms and History tabs and determines whether the LEDs are activated. Critical (CR), Major (MJ), and Minor (MN) alarms activate the LEDs. Not Alarmed (NA) and Not Reported (NR) do not activate LEDs, but do report the information in CTC.
- Virtual Wire—Choose the virtual wire number in the drop-down list to assign the external device to a virtual wire. Otherwise, do not change the None default. For information about the AIC virtual wire, see the "20.7.3 Virtual Wires" section on page 20-14.
- Raised When—From the drop-down list, choose the contact condition (open or closed) that triggers the alarm.

- Description—A default description is provided; enter a different description if needed.

Step 6 To provision up to four virtual wire inputs for external devices, complete Step 5 for each additional device.

Step 7 Click **Apply**.

Step 8 If you are provisioning external control outputs for external devices, click the **External Controls** subtab.

Step 9 Complete the following options for each external control wired to the ONS 15454 backplane:

- Enabled—Check this check box to activate the fields for the alarm input number.
- Control Type—Choose the control type from the drop-down list: air conditioner, engine, fan, generator, heat, light, sprinkler, or miscellaneous.
- Trigger Type—Choose a trigger type: a local minor, major, or critical alarm; a remote minor, major, or critical alarm; or a virtual wire activation.
- Description—Enter a description.

Step 10 To provision additional external controls, complete Steps 8 and 9 for each additional device.

Step 11 Click **Apply**.

Note If you provision an external alarm to raise upon an open contact before you physically connect to the ONS equipment, the alarm will raise until you do create the physical connection.

Note When you provision an external alarm, the alarm object is ENV-IN-*nn*. The variable *nn* refers to the external alarm's number, regardless of the name you assign.

Note Environmental alarms that you create (and name) should be recorded locally for the NE. Both the Alarm name and resolution are node-specific.

Stop. You have completed this procedure.

NTP-G72 Provision External Alarms and Controls on the Alarm Interface Controller-International

Purpose	Use this procedure to create external (environmental) alarms and external controls for the AIC-I card.
Tools/Equipment	An AIC-I card must be installed in Slot 9.
Prerequisite Procedures	DLP-G34 Install the AIC or AIC-I Card, page 1-76
Required/As Needed	As needed
Onsite/Remote	Onsite or remote
Security Level	Provisioning or higher

Note On the ONS 15454 ANSI shelf, the AIC-I card alarm provides direct alarm contacts (external alarm inputs and external control outputs) routed through the backplane to wire-wrap pins accessible from the back of the shelf. If you install an Alarm Expansion Panel (AEP), the AIC-I alarm contacts cannot be used. Only the AEP alarm contacts can be used. For further information about the AEP, see "NTP-G9 Install the Alarm Expansion Panel (ANSI Only)" procedure on page 1-44 and the "NTP-G11 Install an External Wire-Wrap Panel on the AEP (ANSI Only)" procedure on page 1-59. The ONS 15454 ETSI shelf is not compatible with the AEP.

Note For information about the AIC-I alarms, controls, and virtual wire, refer to the "14.2.3 AIC-I Card" section on page 14-17 and the "20.7.3 Virtual Wires" section on page 20-14.

Step 1 If you are using an ONS 15454 ANSI shelf, verify the backplane wiring. If you are using the AEP, see the "NTP-G9 Install the Alarm Expansion Panel (ANSI Only)" procedure on page 1-44. Otherwise, see the "NTP-G10 Attach Wires to Alarm, Timing, LAN, and Craft Pin Connections" procedure on page 1-47 for information about the ONS 15454 backplane pins.

a. For external alarms, verify that the external device relays are wired to the ENVIR ALARMS IN backplane pins.

b. For external controls, verify that the external device relays are wired to the ENVIR ALARMS OUT backplane pins.

Step 2 If you are using an ONS 15454 ETSI shelf, verify the alarm contact wiring. See the "NTP-G10 Attach Wires to Alarm, Timing, LAN, and Craft Pin Connections" procedure on page 1-47 for information about the ONS 15454 SDH contacts.

a. For external alarms, verify that the external device relays are wired to the ENVIR ALARMS IN connector pins.

b. For external controls, verify the external device relays are wired to the ENVIR ALARMS OUT connector pins.

Step 3 Complete the "DLP-G46 Log into CTC" task on page 2-25. If you are already logged in, continue with Step 2.

Step 4 In the node view, double-click the AIC-I card on the shelf graphic. The card view appears.

Step 5 Click the **Provisioning > Card** tabs.

Step 6 In the Alarm Contacts area, click the Add Extension radio button if you are using the AEP. Clicking this option will choose the External Alarm input/output type and the AEP extension type; it will give you access to 16 external alarm contacts.

Step 7 If you did not click Add Extension, in the Input/Output area, choose either External Alarm or External Control. (External Alarm will limit your input/output options as explained in Step 6.) Choosing External Control will enable both external alarms and external controls. This will convert four of the external alarm contacts to external controls, leaving 12 available external control contacts. The extension type for both options is AEP.

Step 8 Click **Apply**.

Step 9 If you are provisioning external alarms, click the **External Alarms** tab (Figure 7-16). If you are not provisioning external alarms, skip Steps 10 through 12 and go to Step 13.

Figure 7-16 Provisioning External Alarms on the AIC-I Card

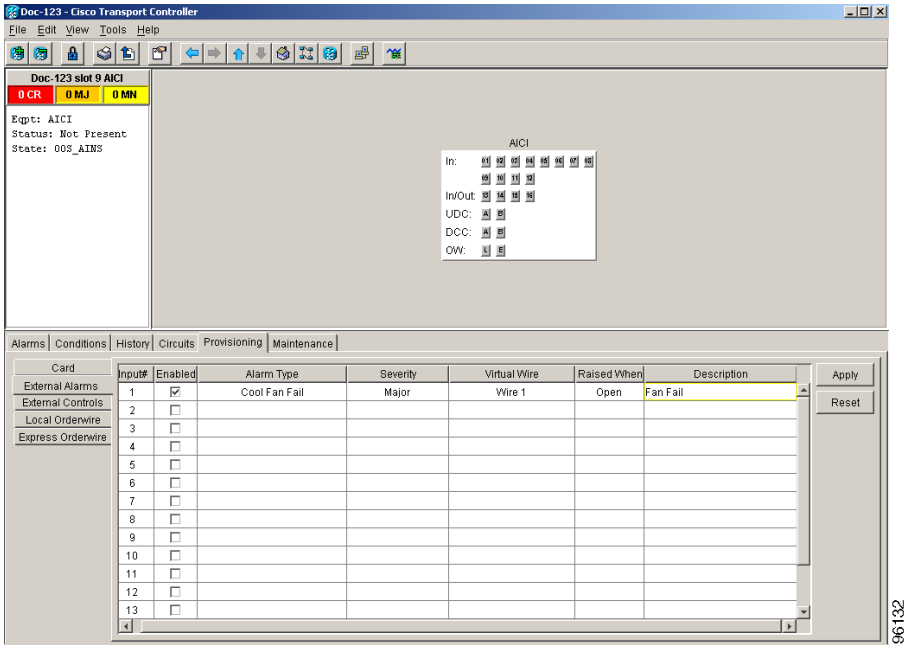

Step 10 For external alarms, complete the following fields:

- Enabled—Check the check box to activate the fields for the alarm input number.
- Alarm Type—Choose an alarm type from the drop-down list.
- Severity—Choose a severity from the drop-down list.

  The severity determines the alarm's severity in the Alarms and History tabs and determines whether the LEDs are activated. Critical (CR), Major (MJ), and Minor (MN) alarms activate the LEDs. Not Alarmed (NA) and Not Reported (NR) do not activate LEDs, but do report the information in CTC.
- Virtual Wire—Choose the virtual wire number from the drop-down list to assign the external device to a virtual wire. Otherwise, do not change the None default.
- Raised When—From the drop-down list, choose the contact condition (open or closed) that triggers the alarm.
- Description—A default description is provided; enter a different description if needed.

Step 11 To provision additional devices, complete Step 10 for each additional device.

Step 12 Click **Apply**.

Step 13 For external controls, click the **External Controls** tab and complete the following fields for each control wired to the ONS 15454 backplane (ANSI) or FMEC connector pins (ETSI):

- Enabled—Check this check box to activate the fields for the alarm input number.
- Control Type—Choose the control type from the drop-down list: air conditioner, engine, fan, generator, heat, light, sprinkler, or miscellaneous.
- Trigger Type—Choose a trigger type: a local minor, major, or critical alarm; a remote minor, major, or critical alarm; or a virtual wire activation.
- Description—Enter a description.

Step 14 To provision additional external controls, complete Step 13 for each device.

Step 15 Click **Apply**.

Note When you provision an external alarm, the alarm object is ENV-IN-*nn*. The variable *nn* refers to the external alarm's number, regardless of the name you assign.

Note Environmental alarms that you create (and name) should be recorded locally for the NE. Both the Alarm name and resolution are node-specific.

Stop. You have completed this procedure.

Monitor Performance

This chapter explains how to enable and view performance monitoring statistics for the Cisco ONS 15454. Performance monitoring (PM) parameters are used by service providers to gather, store, and set thresholds and report performance data for early detection of problems. For more PM information, details, and definitions, refer to the *Cisco ONS 15454 SONET and DWDM Troubleshooting Guide*.

Note Unless otherwise specified, "ONS 15454" refers to both ANSI and ETSI shelf assemblies.

Before You Begin

Before performing any of the following procedures, investigate all alarms and clear any trouble conditions. Refer to the *Cisco ONS 15454 SONET and DWDM Troubleshooting Guide* as necessary.

This section lists the chapter procedures (NTPs). Turn to a procedure for applicable tasks (DLPs).

1. NTP-G73 Change the PM Display, page 8-2—Complete as needed to change the displayed PM counts.
2. NTP-G74 Monitor DWDM Card Performance, page 8-8—Complete as needed to monitor dense wavelength division multiplexing (DWDM) performance.
3. NTP-G75 Monitor Transponder and Muxponder Performance, page 8-15—Complete as needed to monitor multirate transport performance.

Note For additional information regarding PM parameters, refer to Telcordia's GR-1230-CORE, GR-499-CORE, and GR-253-CORE documents and GR-820-CORE document titled Generic Digital Transmission Surveillance, and in the ANSI T1.231 document entitled *Digital Hierarchy - Layer 1 In-Service Digital Transmission Performance Monitoring*.

NTP-G73 Change the PM Display

Purpose	This procedure enables you to change the display of PM counts by selecting drop-down list or radio button options in the Performance window.
Tools/Equipment	None
Prerequisite Procedures	Before you monitor performance, be sure you have created the appropriate circuits and provisioned the card according to your specifications. For more information, see Chapter 6, "Create Channels and Circuits" and Chapter 10, "Change Card Settings."
Required/As Needed	As needed
Onsite/Remote	Onsite or remote
Security Level	Retrieve or higher

Step 1 Complete the "DLP-G46 Log into CTC" task on page 2-25 at the node that you want to monitor. If you are already logged in, continue with Step 2.

Step 2 In node view, double-click the DWDM or multirate card where you want to view PM counts. The card view appears.

Step 3 As needed, use the following tasks to change the display of PM counts:

- DLP-G131 Refresh PM Counts at 15-Minute Intervals, page 8-2
- DLP-G132 Refresh PM Counts at One-Day Intervals, page 8-3
- DLP-G133 View Near-End PM Counts, page 8-4
- DLP-G134 View Far-End PM Counts, page 8-4
- DLP-G135 Reset Current PM Counts, page 8-5
- DLP-G136 Clear Selected PM Counts, page 8-6
- DLP-G137 Set Auto-Refresh Interval for Displayed PM Counts, page 8-6
- DLP-G138 Refresh PM Counts for a Different Port, page 8-7

Stop. You have completed this procedure.

DLP-G131 Refresh PM Counts at 15-Minute Intervals

Purpose	This task changes the window view to display PM counts in 15-minute intervals.
Tools/Equipment	None
Prerequisite Procedures	DLP-G46 Log into CTC, page 2-25
Required/As Needed	As needed
Onsite/Remote	Onsite or remote
Security Level	Retrieve or higher

Step 1 In node view, double-click the card where you want to view PM counts. The card view appears.

Step 2 Click the **Performance** tab.

Step 3 Click the **15 min** radio button.

Step 4 Click **Refresh**. Performance monitoring parameters appear in 15-minute intervals synchronized with the time of day.

Step 5 View the Curr column to find PM counts for the current 15-minute interval.

Each monitored performance parameter has corresponding threshold values for the current time period. If the value of the counter exceeds the threshold value for a particular 15-minute interval, a threshold crossing alert (TCA) is raised. The number represents the counter value for each specific performance monitoring parameter.

Step 6 View the Prev-*n* columns to find PM counts for the previous 15-minute intervals.

Note If a complete 15-minute interval count is not possible, the value appears with a yellow background. An incomplete or incorrect count can be caused by monitoring for less than 15 minutes after the counter started, changing the node timing settings, changing the time zone settings, replacing a card, resetting a card, or changing port service states. When the problem is corrected, the subsequent 15-minute interval appears with a white background.

Step 7 Return to your originating procedure (NTP).

DLP-G132 Refresh PM Counts at One-Day Intervals

Purpose	This task changes the window view to display PM parameters in 1-day intervals.
Tools/Equipment	None
Prerequisite Procedures	DLP-G46 Log into CTC, page 2-25
Required/As Needed	As needed
Onsite/Remote	Onsite or remote
Security Level	Retrieve or higher

Step 1 In node view, double-click the card where you want to view PM counts. The card view appears.

Step 2 Click the **Performance** tab.

Step 3 Click the **1 day** radio button.

Step 4 Click **Refresh**. Performance monitoring appears in 1-day intervals synchronized with the time of day.

Step 5 View the Curr column to find PM counts for the current 1-day interval.

Each monitored performance parameter has corresponding threshold values for the current time period. If the value of the counter exceeds the threshold value for a particular 1-day interval, a TCA is raised. The number represents the counter value for each specific performance monitoring parameter.

Step 6 View the Prev-*n* columns to find PM counts for the previous 1-day intervals.

Note If a complete count over a 1-day interval is not possible, the value appears with a yellow background. An incomplete or incorrect count can be caused by monitoring for less than 24 hours after the counter started, changing node timing settings, changing the time zone settings, replacing a card, resetting a card, or changing port service states. When the problem is corrected, the subsequent 1-day interval appears with a white background.

Step 7 Return to your originating procedure (NTP).

DLP-G133 View Near-End PM Counts

Purpose	This task enables you to view near-end PM counts for the selected card and port.
Tools/Equipment	None
Prerequisite Procedures	DLP-G46 Log into CTC, page 2-25
Required/As Needed	As needed
Onsite/Remote	Onsite or remote
Security Level	Retrieve or higher

Step 1 In node view, double-click the card where you want to view PM counts. The card view appears.

Step 2 Click the **Performance** tab.

Step 3 Click the **Near End** radio button.

Step 4 Click **Refresh**. All PM parameters occurring for the selected card on the incoming signal appear. For PM parameter definitions, refer to the *Cisco ONS 15454 SONET and DWDM Troubleshooting Guide*.

Step 5 View the Curr column to find PM counts for the current time interval.

Step 6 View the Prev-*n* columns to find PM counts for the previous time intervals.

Step 7 Return to your originating procedure (NTP).

DLP-G134 View Far-End PM Counts

Purpose	This task enables you to view far-end PM parameters for the selected card and port.
Tools/Equipment	None
Prerequisite Procedures	DLP-G46 Log into CTC, page 2-25
Required/As Needed	As needed
Onsite/Remote	Onsite or remote
Security Level	Retrieve or higher

Step 1 In node view, double-click the card where you want to view PM counts. The card view appears.

Step 2 Click the **Performance** tab.

Step 3 Click the **Far End** radio button.

Step 4 Click **Refresh**. All PM parameters recorded by the far-end node for the selected card on the outgoing signal appear. For PM parameter definitions, refer to the *Cisco ONS 15454 SONET and DWDM Troubleshooting Guide*.

Step 5 View the Curr column to find PM counts for the current time interval.

Step 6 View the Prev-*n* columns to find PM counts for the previous time intervals.

Step 7 Return to your originating procedure (NTP).

DLP-G135 Reset Current PM Counts

Purpose	This task clears the current PM count, but it does not clear the cumulative PM count. This task allows you to see how quickly PM counts rise.
Tools/Equipment	None
Prerequisite Procedures	DLP-G46 Log into CTC, page 2-25
Required/As Needed	As needed
Onsite/Remote	Onsite or remote
Security Level	Retrieve or higher

Step 1 In node view, double-click the card where you want to view PM counts. The card view appears.

Step 2 Click the **Performance** tab.

Step 3 Click **Baseline**.

Note The Baseline button clears the PM counts displayed in the current time interval but does not clear the PM counts on the card. When the current time interval expires or the window view changes, the total number of PM counts on the card and on the window appears in the appropriate column. The baseline values are discarded if you change views to a different window and then return to the Performance window.

Step 4 View the current statistics columns to observe changes to PM counts for the current time interval.

Step 5 Return to your originating procedure (NTP).

DLP-G136 Clear Selected PM Counts

Purpose	This task uses the Clear button to clear specified PM counts depending on the option selected.
Tools/Equipment	None
Prerequisite Procedures	DLP-G46 Log into CTC, page 2-25
Required/As Needed	As needed
Onsite/Remote	Onsite or remote
Security Level	Superuser

Caution Pressing the Clear button can mask problems if used incorrectly. This button is commonly used for testing purposes. After pressing this button, the current bin is marked invalid. Also note that the unavailable seconds (UAS) count is not cleared if you were counting UAS; therefore, this count could be unreliable when you press Clear.

Step 1 In node view, double-click the card where you want to view PM counts. The card view appears.

Step 2 Click the **Performance** tab.

Step 3 Click **Clear**.

Step 4 From the Clear Statistics dialog box, click one of the following radio buttons:

- **Displayed statistics**: Clearing displayed statistics erases all PM counts associated with the current combination of statistics on the selected port from the card and the window. This means that the selected time interval, direction, and signal type counts are erased from the card and the window.
- **All statistics for port** *x*: Clearing all statistics for port *x* erases all PM counts associated with all combinations of the statistics on the selected port from the card and the window. This means that all time intervals, directions, and signal type counts are erased from the card and the window.
- **All statistics for card**: Clearing all statistics for card erases all PM counts for all ports from the card and the window.

Step 5 From the Clear Statistics dialog box, click **OK** to clear the selected statistics.

Step 6 Verify that the selected PM counts have been cleared.

Step 7 Return to your originating procedure (NTP).

DLP-G137 Set Auto-Refresh Interval for Displayed PM Counts

Purpose	This task changes the window auto-refresh intervals for updating the displayed PM counts.
Tools/Equipment	None
Prerequisite Procedures	DLP-G46 Log into CTC, page 2-25
Required/As Needed	As needed
Onsite/Remote	Onsite or remote
Security Level	Retrieve or higher

Step 1 In node view, double-click the card where you want to view PM counts. The card view appears.

Step 2 Click the **Performance** tab.

Step 3 From the Auto-refresh drop-down list, choose one of the following options:

- **None**: This option disables the auto-refresh feature.
- **15 Seconds**: This option sets the window auto-refresh to 15-second time intervals.
- **30 Seconds**: This option sets the window auto-refresh to 30-second time intervals.
- **1 Minute**: This option sets the window auto-refresh to 1-minute time intervals.
- **3 Minutes**: This option sets the window auto-refresh to 3-minute time intervals.
- **5 Minutes**: This option sets the window auto-refresh to 5-minute time intervals.

Step 4 Click **Refresh**. The PM counts for the newly selected auto-refresh time interval appear.

Depending on the selected auto-refresh interval, the displayed PM counts automatically update when each refresh interval completes. If the auto-refresh interval is set to None, the PM counts that appear are not updated unless you click Refresh.

Step 5 Return to your originating procedure (NTP).

DLP-G138 Refresh PM Counts for a Different Port

Purpose	This task changes the window view to display PM counts for another port on a multiport card.
Tools/Equipment	None
Prerequisite Procedures	DLP-G46 Log into CTC, page 2-25
Required/As Needed	As needed
Onsite/Remote	Onsite or remote
Security Level	Retrieve or higher

Step 1 In node view, double-click the card where you want to view PM counts. The card view appears.

Step 2 Click the **Performance** tab.

Step 3 In the Port drop-down list, choose a port.

Step 4 Click **Refresh**. The PM counts for the newly selected port appear.

Step 5 Return to your originating procedure (NTP).

NTP-G74 Monitor DWDM Card Performance

Purpose	This procedure enables you to view, transmit, and receive performance information about an Optical Service Channel, Multiplexer/Demultiplexer, Amplifier, and OADM card and port during selected time intervals to detect possible performance problems.
Tools/Equipment	None
Prerequisite Procedures	Before you monitor performance, be sure you have created the appropriate circuits and provisioned the card according to your specifications. For more information, see Chapter 6, "Create Channels and Circuits" and Chapter 10, "Change Card Settings."
Required/As Needed	As needed
Onsite/Remote	Onsite or remote
Security Level	Retrieve or higher

Step 1 Complete the "DLP-G46 Log into CTC" procedure on page 2-25 at the node that you want to monitor. If you are already logged in, continue with Step 2.

Step 2 Complete the following tasks as needed:

- DLP-G139 View Optical Service Channel PM Parameters, page 8-8.
- DLP-G140 View Optical Amplifier PM Parameters, page 8-10.
- DLP-G141 View PMs for 32MUX-O, 32-WSS, 32-DMX-O, and 32DMX Cards, page 8-11.
- DLP-G142 View Channel Filter Optical Add/Drop Multiplexer PM Parameters, page 8-12.
- DLP-G143 View Band Filter Optical Add/Drop Multiplexer PM Parameters, page 8-14.

Note To refresh, reset, or clear PM counts, see the "NTP-G73 Change the PM Display" procedure on page 8-2.

Stop. You have completed this procedure.

DLP-G139 View Optical Service Channel PM Parameters

Purpose	This task enables you to view optical service channel (OSC) PM counts at selected time intervals on an Optical Service Channel Module (OSCM) or Optical Service Channel and Combiner/Separator Module (OSC-CSM) card and port to detect possible performance problems.
Tools/Equipment	None
Prerequisite Procedures	DLP-G46 Log into CTC, page 2-25
Required/As Needed	As needed
Onsite/Remote	Onsite or remote
Security Level	Retrieve or higher

Step 1 In node view, double-click the OSCM or OSC-CSM card where you want to view PM counts. The card view appears.

Step 2 Click the **Performance > OC3 Line** tabs (Figure 8-1).

Figure 8-1 OC3 Line Tab in the Optical Service Channel Card View Performance Window

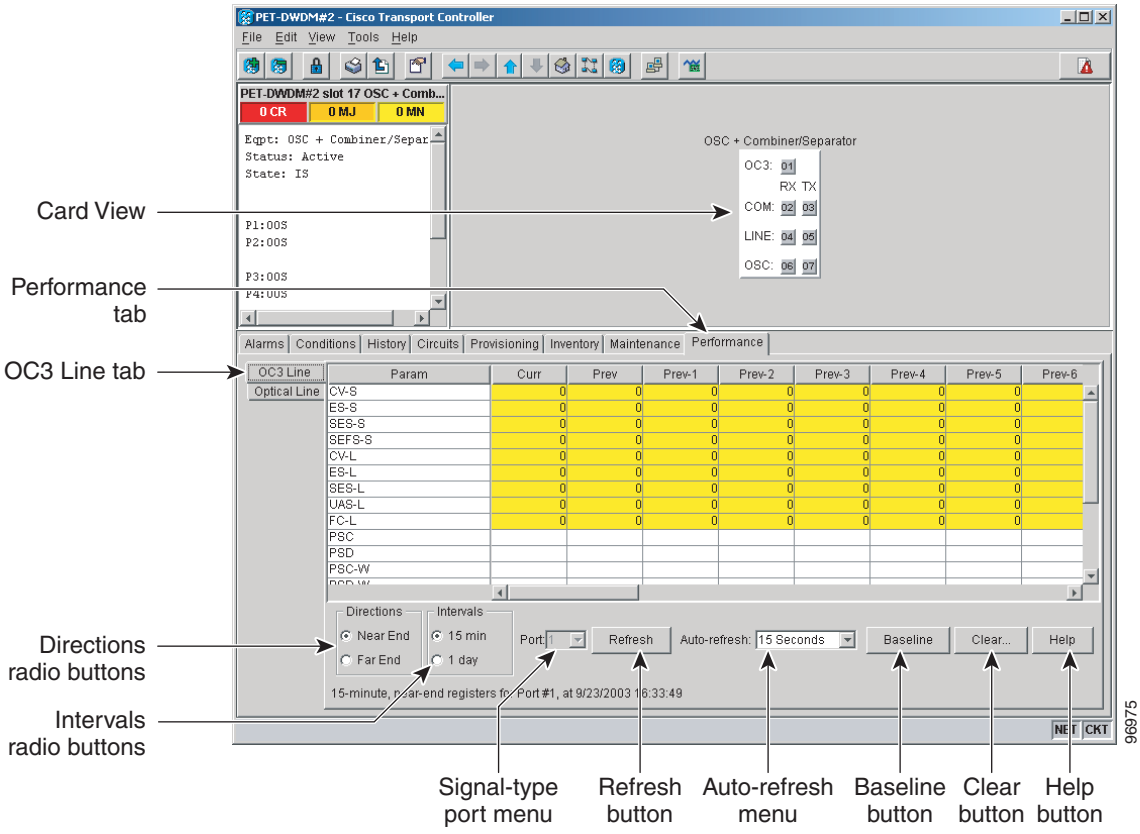

Step 3 Click **Refresh**. OC3 line performance monitoring statistics for the selected port appear.

Step 4 Click the **Optical Line** tab.

Step 5 Click **Refresh**. Optical line performance monitoring statistics for the selected port appear.

Step 6 Return to your originating procedure (NTP).

DLP-G140 View Optical Amplifier PM Parameters

Purpose	This task enables you to view optical amplifier PM counts at selected time intervals on an Optical Preamplifier (OPT-PRE) or Optical Booster (OPT-BST) amplifier card and port to detect possible performance problems.
Tools/Equipment	None
Prerequisite Procedures	DLP-G46 Log into CTC, page 2-25
Required/As Needed	As needed
Onsite/Remote	Onsite or remote
Security Level	Retrieve or higher

Step 1 In node view, double-click the optical amplifier card where you want to view PM counts. The card view appears.

Step 2 Click the **Performance** > **Optical Line** tabs (Figure 8-2).

Figure 8-2 Optical Line Tab in the Optical Amplifier Card View Performance Window

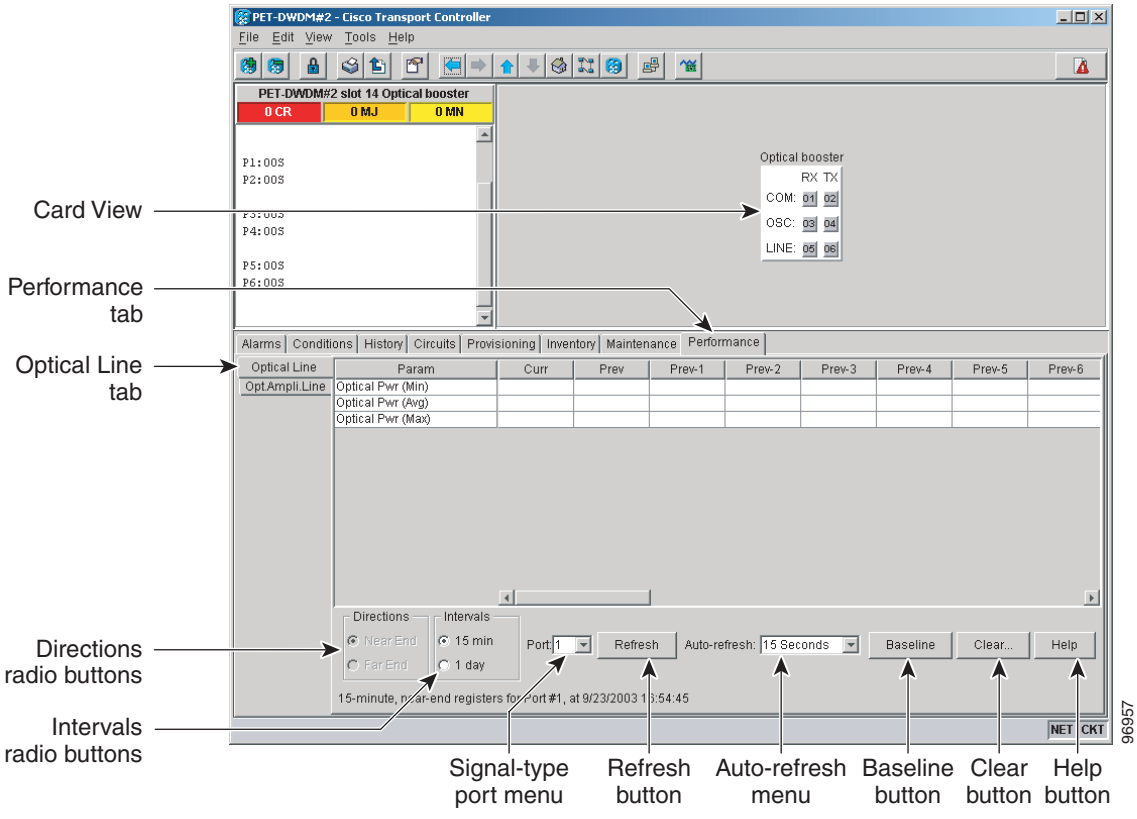

Step 3 Click **Refresh**. Optical line performance monitoring statistics for the selected port appear.

Step 4 Click the **Opt. Ampli. Line** tab.

Step 5 Click **Refresh**. Optical amplifier line performance monitoring statistics for the selected port appear.

Step 6 Return to your originating procedure (NTP).

DLP-G141 View PMs for 32MUX-O, 32-WSS, 32-DMX-O, and 32DMX Cards

Purpose	This task enables you to view multiplexer or demultiplexer PM counts at selected time intervals on a 32MUX-O (32-Channel Multiplexer), 32-WSS (32-Channel Wavelength Selective Switch), 32-DMX-O, and 32DMX (32-Channel Demultiplexer) cards and port to detect possible performance problems.
Tools/Equipment	None
Prerequisite Procedures	DLP-G46 Log into CTC, page 2-25
Required/As Needed	As needed
Onsite/Remote	Onsite or remote
Security Level	Retrieve or higher

Step 1 In node view, double-click the 32MUX-O, 32-WSS, 32-DMX-O, or 32DMX card where you want to view PM counts. The card view appears.

Step 2 Click the **Performance** > **Optical Chn** tabs (Figure 8-3).

Figure 8-3 Optical Channel Tab in the Multiplexer/Demultiplexer Card View Performance Window

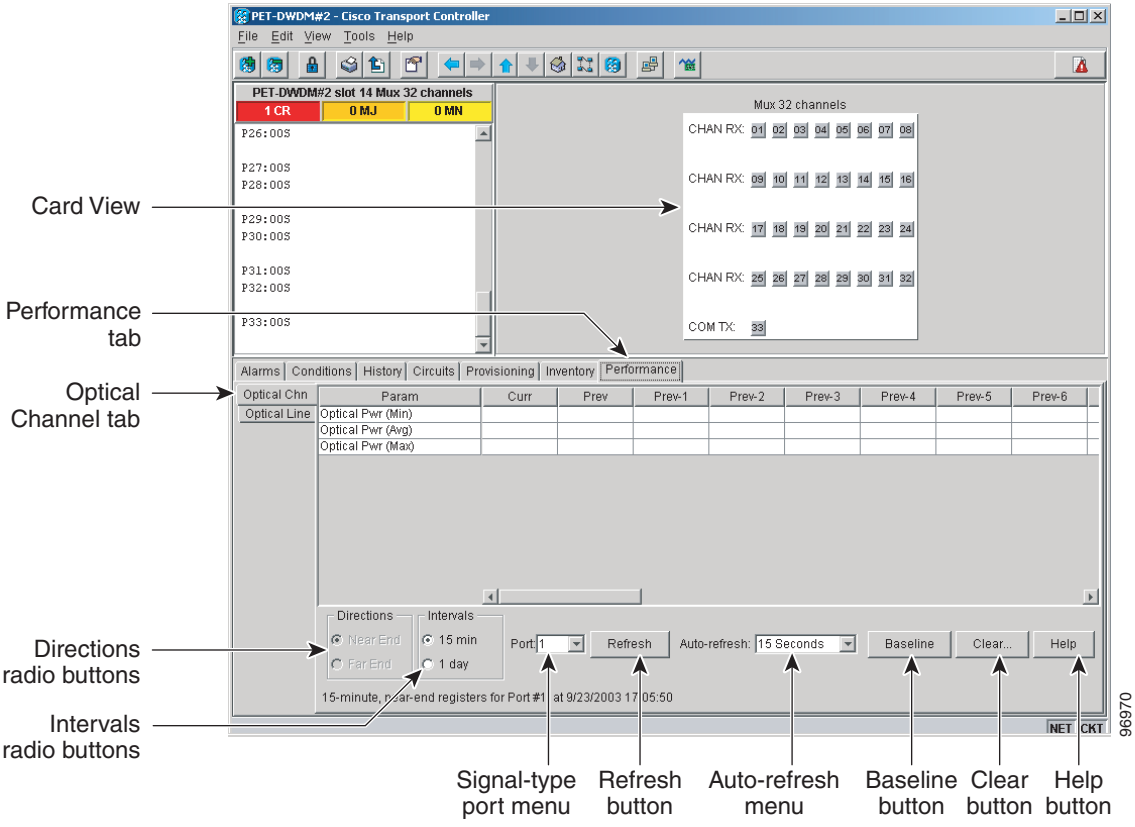

Step 3 Click **Refresh**. Optical channel performance monitoring statistics for the selected port appear.

Step 4 Click the **Optical Line** tab.

Step 5 Click **Refresh**. Optical line performance monitoring statistics for the selected port appear.

Step 6 Return to your originating procedure (NTP).

DLP-G142 View Channel Filter Optical Add/Drop Multiplexer PM Parameters

Purpose	This task enables you to view channel filter optical add/drop channel multiplexer (OADM) PM counts at selected time intervals on an 1-Channel OADM (AD-1C-xx.x), 2-Channel OADM (AD-2C-xx.x), or 4-Channel OADM (AD-4C-xx.x) card and port to detect possible performance problems.
Tools/Equipment	None
Prerequisite Procedures	DLP-G46 Log into CTC, page 2-25
Required/As Needed	As needed
Onsite/Remote	Onsite or remote
Security Level	Retrieve or higher

Step 1 In node view, double-click the optical AD-xC-xx.x card where you want to view PM counts. The card view appears.

Step 2 Click the **Performance** > **Optical Line** tabs (Figure 8-4).

Figure 8-4 Optical Line Tab in the Channel Filter OADM Card View Performance Window

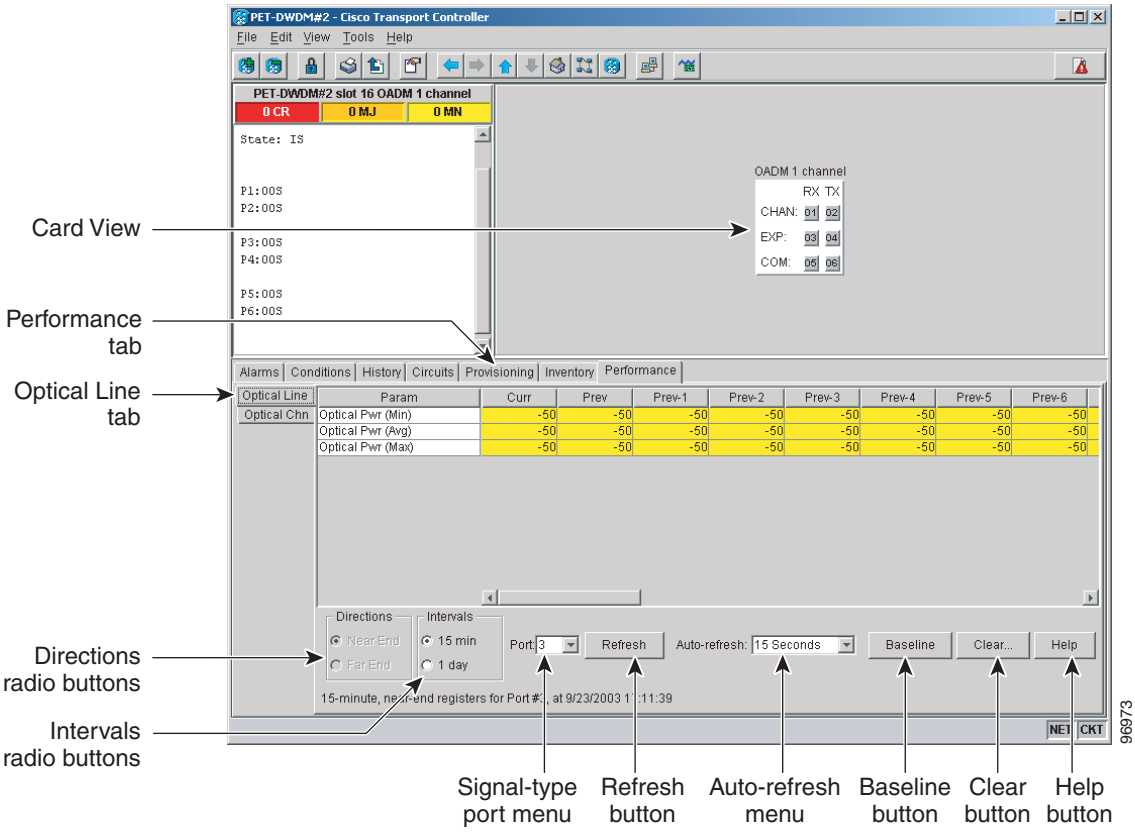

Step 3 Click **Refresh**. Optical line performance monitoring statistics for the selected port appear.

Step 4 Click the **Optical Chn** tab.

Step 5 Click **Refresh**. Optical channel performance monitoring statistics for the selected port appear.

Step 6 Return to your originating procedure (NTP).

DLP-G143 View Band Filter Optical Add/Drop Multiplexer PM Parameters

Purpose	This task enables you to view band filter OADM PM counts at selected time intervals on an 1-Band OADM (AD-1B-xx.x), 4-Band OADM (AD-4B-xx.x), or 4-Channel Multiplexer/Demultiplexer (4MD-xx.x) card and port to detect possible performance problems.
Tools/Equipment	None
Prerequisite Procedures	DLP-G46 Log into CTC, page 2-25
Required/As Needed	As needed
Onsite/Remote	Onsite or remote
Security Level	Retrieve or higher

Step 1 In node view, double-click the AD-xB-xx.x or the 4MD-xxx card where you want to view PM counts. The card view appears.

Step 2 Click the **Performance** > **Optical Chn** tabs (Figure 8-5).

Figure 8-5 Optical Channel Tab in the Band Filter OADM Card View Performance Window

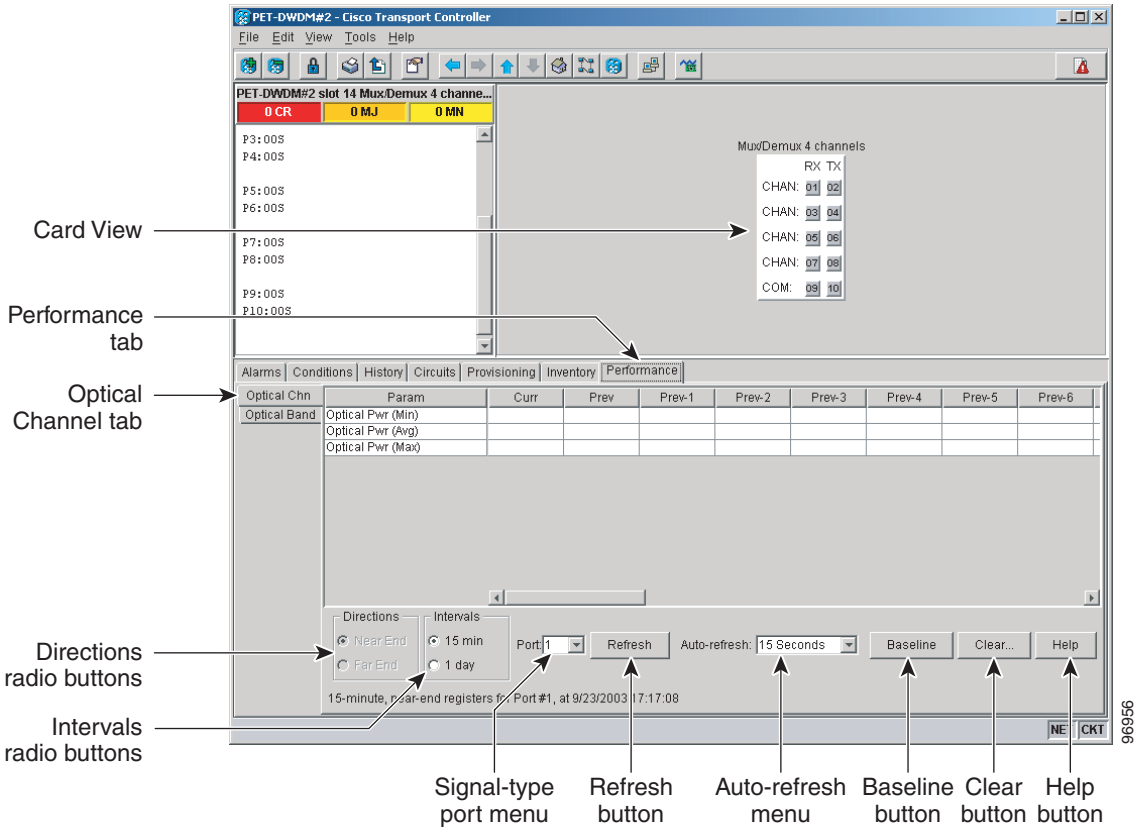

Step 3 Click **Refresh**. Optical channel performance monitoring statistics for the selected port appear.

Step 4 Click the **Optical Band** tab.

Step 5 Click **Refresh**. Optical band performance monitoring statistics for the selected port appear.

Step 6 Return to your originating procedure (NTP).

NTP-G75 Monitor Transponder and Muxponder Performance

Purpose	This procedure enables you to view node near-end or far-end performance during selected time intervals on a transponder (TXP_MR_10G, TXP_MR_2.5G, TXPP_MR_2.5G, TXP_MR_10E), or a muxponder (MXP_2.5G_10E, MXP_MR_2.5G, MXPP_MR_2.5G, MXP_2.5G_10G) card and port to detect possible performance problems.
Tools/Equipment	None
Prerequisite Procedures	Before you monitor performance, be sure you have created the appropriate circuits and provisioned the card according to your specifications. For more information, see Chapter 6, "Create Channels and Circuits" and Chapter 10, "Change Card Settings."
Required/As Needed	As needed
Onsite/Remote	Onsite or remote
Security Level	Retrieve or higher

Step 1 Complete the "DLP-G46 Log into CTC" task on page 2-25 at the node that you want to monitor. If you are already logged in, continue with Step 2.

Step 2 Complete the "DLP-G144 Enable/Disable OTN ITU-T G.709 Performance Monitoring" task on page 8-16 as needed to enable or disable optical transport network (OTN) ITU-T G.709 monitoring.

Step 3 Complete the "DLP-G145 Enable/Disable OTN FEC Performance Monitoring" task on page 8-17 as needed to enable or disable OTN forward error correction (FEC) monitoring.

Step 4 Complete the following tasks as needed to view PM parameters:

- DLP-G146 View Optics PM Parameters, page 8-18.
- DLP-G147 View Payload PM Parameters, page 8-19.
- DLP-G148 View OTN PM Parameters, page 8-21.
- DLP-G149 View Payload Statistics PM Parameters, page 8-22.
- DLP-G150 View Payload Utilization PM Parameters, page 8-24.
- DLP-G151 View Payload History PM Parameters, page 8-25.
- DLP-G152 View Payload SONET PM Parameters, page 8-26.
- DLP-G153 Create RMON Alarm Thresholds, page 8-28.
- DLP-G154 Delete RMON Alarm Thresholds, page 8-30.

Note To refresh, reset, or clear PM counts, see the "NTP-G73 Change the PM Display" task on page 8-2.

Stop. You have completed this procedure.

DLP-G144 Enable/Disable OTN ITU-T G.709 Performance Monitoring

Purpose	This task enables or disables OTN ITU-T G.709 monitoring of near-end or far-end performance on a card and port during selected time intervals to detect possible problems.
Tools/Equipment	None
Prerequisite Procedures	DLP-G46 Log into CTC, page 2-25
Required/As Needed	As needed
Onsite/Remote	Onsite or remote
Security Level	Provisioning or higher

Step 1 In node view, double-click the card you want to monitor. The card view appears.

Step 2 Click the **Provisioning > OTN > OTN Lines** tabs (Figure 8-6).

Figure 8-6 OTN Lines Tab for Enabling/Disabling OTN ITU-T G.709 Performance Monitoring

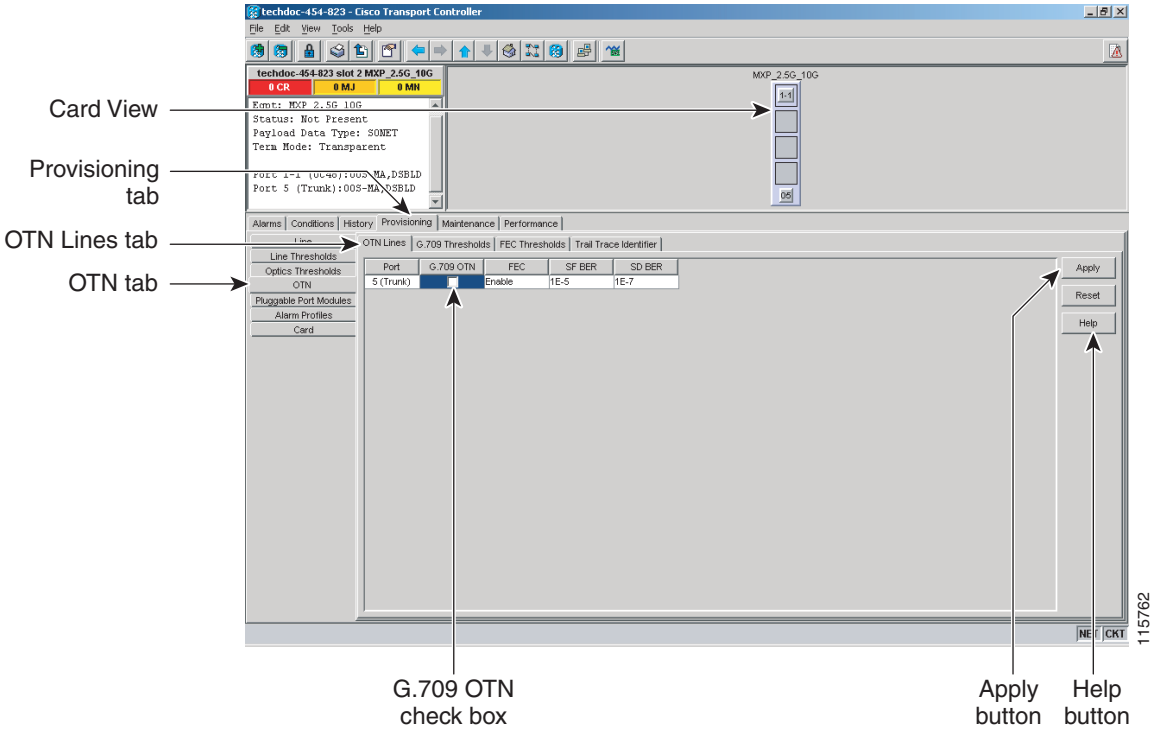

Step 3 Make an ITU-T G.709 selection based on the following rules:

- Unchecked disables ITU-T G.709 for that port (default).
- Checked enables ITU-T G.709 for that port.

Step 4 Click **Apply**.

Step 5 Click the **Performance** tab to view PM parameters. For PM parameter definitions, refer to the *Cisco ONS 15454 SONET and DWDM Troubleshooting Guide*.

Step 6 Return to your originating procedure (NTP).

DLP-G145 Enable/Disable OTN FEC Performance Monitoring

Purpose	This task enables or disables OTN FEC monitoring of node near-end or far-end performance on a selected card and port during selected time intervals.
Tools/Equipment	None
Prerequisite Procedures	DLP-G46 Log into CTC, page 2-25
Required/As Needed	As needed
Onsite/Remote	Onsite or remote
Security Level	Provisioning or higher

Step 1 In node view, double-click the card you want to monitor. The card view appears.

Step 2 Click the **Provisioning > OTN > OTN Lines** tabs (Figure 8-7).

Figure 8-7 OTN Lines Tab for Enabling/Disabling OTN FEC Performance Monitoring for TXP_MR_10E Cards

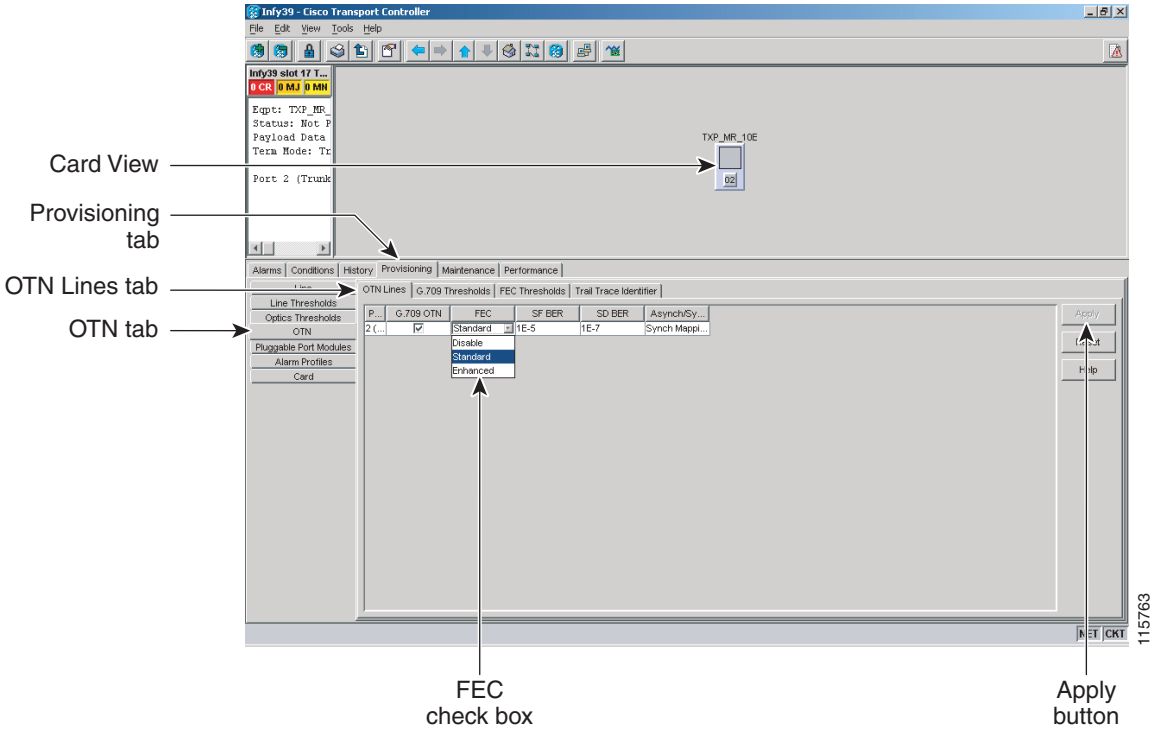

Step 3 Make an FEC selection based on the following rules:

- Choose **Disable** to disable the OTN FEC monitoring.
- Choose **Standard** to enable standard FEC monitoring for that port (default).
- Choose **Enhanced** to enable enhanced FEC monitoring for that port.

Note For TXP_MR_10E and MXP_MR_10E cards the FEC selection options available are Disable, Standard, and Enhanced. For all the remaining transponder and muxponder cards the options available are Enable and Disable.

Step 4 Click **Apply**.

Step 5 Click the **Performance** tab to view PM parameters. For PM parameter definitions, refer to the *Cisco ONS 15454 SONET and DWDM Troubleshooting Guide*.

Step 6 Return to your originating procedure (NTP).

DLP-G146 View Optics PM Parameters

Purpose	This task enables you to view the optics PM counts on a transponder (TXP_MR_10G, TXP_MR_2.5G, TXPP_MR_2.5G, TXP_MR_10E), or a muxponder (MXP_2.5G_10E, MXP_MR_2.5G, MXPP_MR_2.5G, MXP_2.5G_10G) card and port to detect possible performance problems.
Tools/Equipment	None
Prerequisite Procedures	DLP-G46 Log into CTC, page 2-25
Required/As Needed	As needed
Onsite/Remote	Onsite or remote
Security Level	Retrieve or higher

Step 1 In node view, double-click the transponder or muxponder card where you want to view PM counts. The card view appears.

Step 2 Click the **Performance > Optics PM** tabs (Figure 8-8).

Figure 8-8 Viewing Optics Performance Monitoring Information

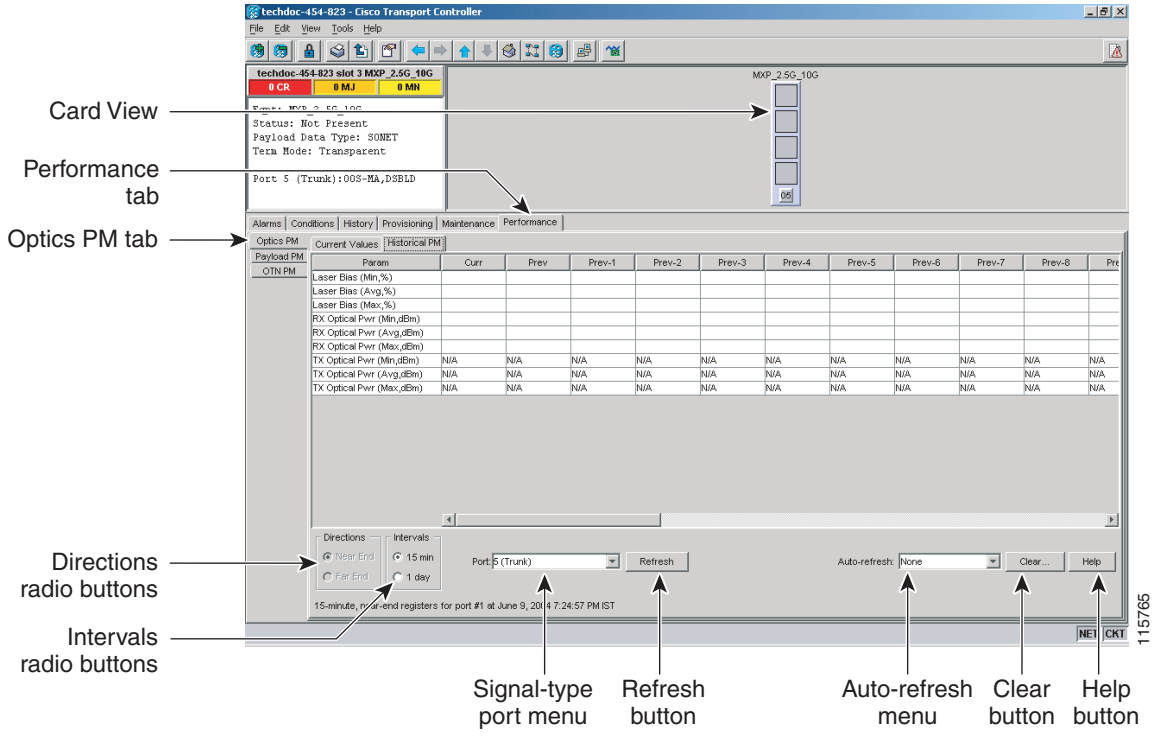

Step 3 View the PM parameter names that appear in the Param column of Current Values and History PM tabs. The PM parameter values appear in the Curr (current) and Prev-*n* (previous) columns. For PM parameter definitions, refer to the *Cisco ONS 15454 SONET and DWDM Troubleshooting Guide*.

Step 4 Return to your originating procedure (NTP).

DLP-G147 View Payload PM Parameters

Purpose	This task enables you to view the payload PM counts on a transponder (TXP_MR_10G, TXP_MR_2.5G, TXPP_MR_2.5G, TXP_MR_10E), or a muxponder (MXP_2.5G_10E, MXP_2.5G_10G) card and port to detect possible performance problems.
Tools/Equipment	None
Prerequisite Procedures	DLP-G46 Log into CTC, page 2-25
Required/As Needed	As needed
Onsite/Remote	Onsite or remote
Security Level	Retrieve or higher

Step 1 In node view, double-click the transponder or muxponder card where you want to view PM counts. The card view appears.

Step 2 Click the **Performance > Payload PM** tabs (Figure 8-9).

Figure 8-9 Viewing Payload Performance Monitoring Information

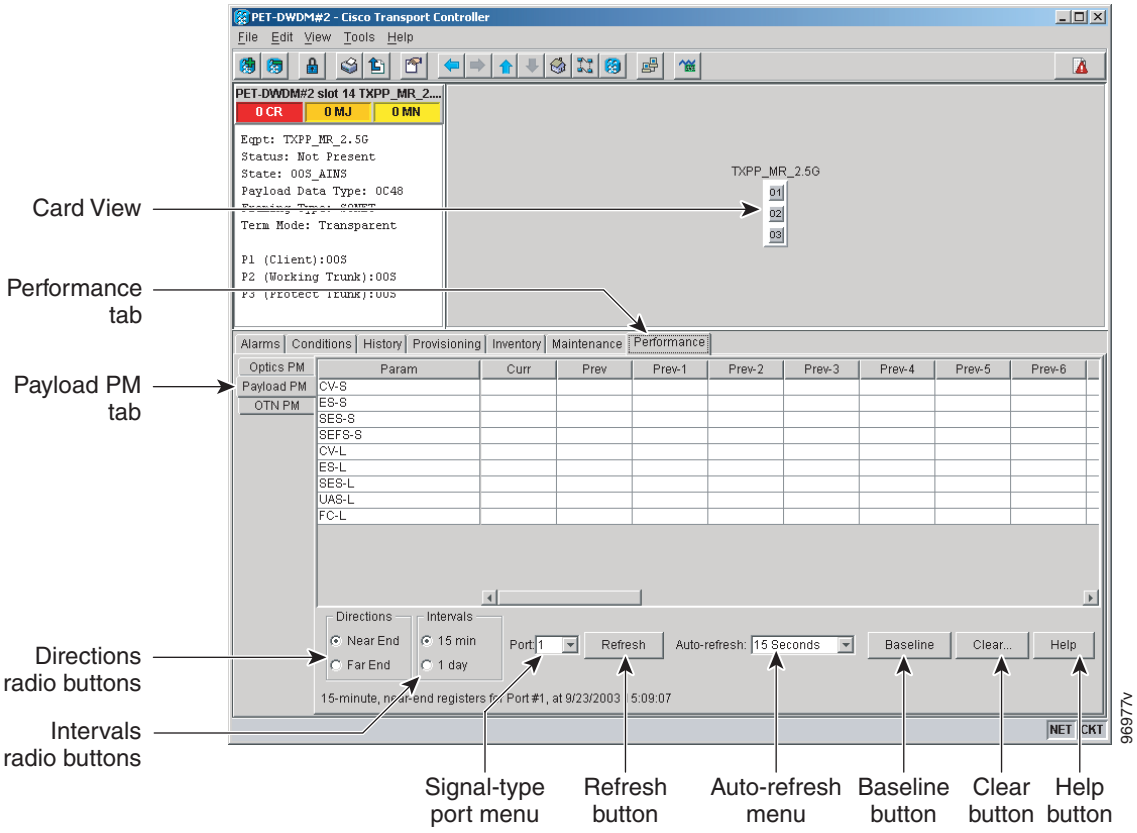

Step 3 View the PM parameter names that appear in the Param column of Current Values and History PM tabs The PM parameter values appear in the Curr (current), and Prev-*n* (previous) columns. For PM parameter definitions, refer to the *Cisco ONS 15454 SONET and DWDM Troubleshooting Guide*.

Note The Payload PMs for data parameters can be viewed only after creating a pluggable port module.

Note The PM parameters that appear depend on the data payload and framing type provisioned on the port. Unframed data payloads such as Enterprise System Connection (ESCON), DV6000, DSI/D1 video, and HDTV do not provide payload performance monitoring information. The PM parameters that appear also depend on the PPM payload configured. The TXP_MR_10E card supports three payloads, MXP_2.5G_10G and MXP_2.5G_10E cards support OC48/STM16 payload, MXP_MR_2.5G and MXPP_MR_2.5G support 1G FC, 2G FC, 1G FICON, 2G FICON, and 1GE payloads.

Step 4 Return to your originating procedure (NTP).

DLP-G148 View OTN PM Parameters

Purpose	This task enables you to view the OTN PM counts on a transponder (TXP_MR_10G, TXP_MR_2.5G, TXPP_MR_2.5G, TXP_MR_10E), or muxponder (MXP_2.5G_10E, MXP_2.5G_10G) card and port to detect possible performance problems.
Tools/Equipment	None
Prerequisite Procedures	DLP-G46 Log into CTC, page 2-25
Required/As Needed	As needed
Onsite/Remote	Onsite or remote
Security Level	Retrieve or higher

Step 1 In node view, double-click the transponder or muxponder card where you want to view PM counts. The card view appears.

Step 2 Click the **Performance > OTN PM > G.709** tabs (Figure 8-10).

Figure 8-10 Viewing OTN ITU-T G.709 Performance Monitoring Information

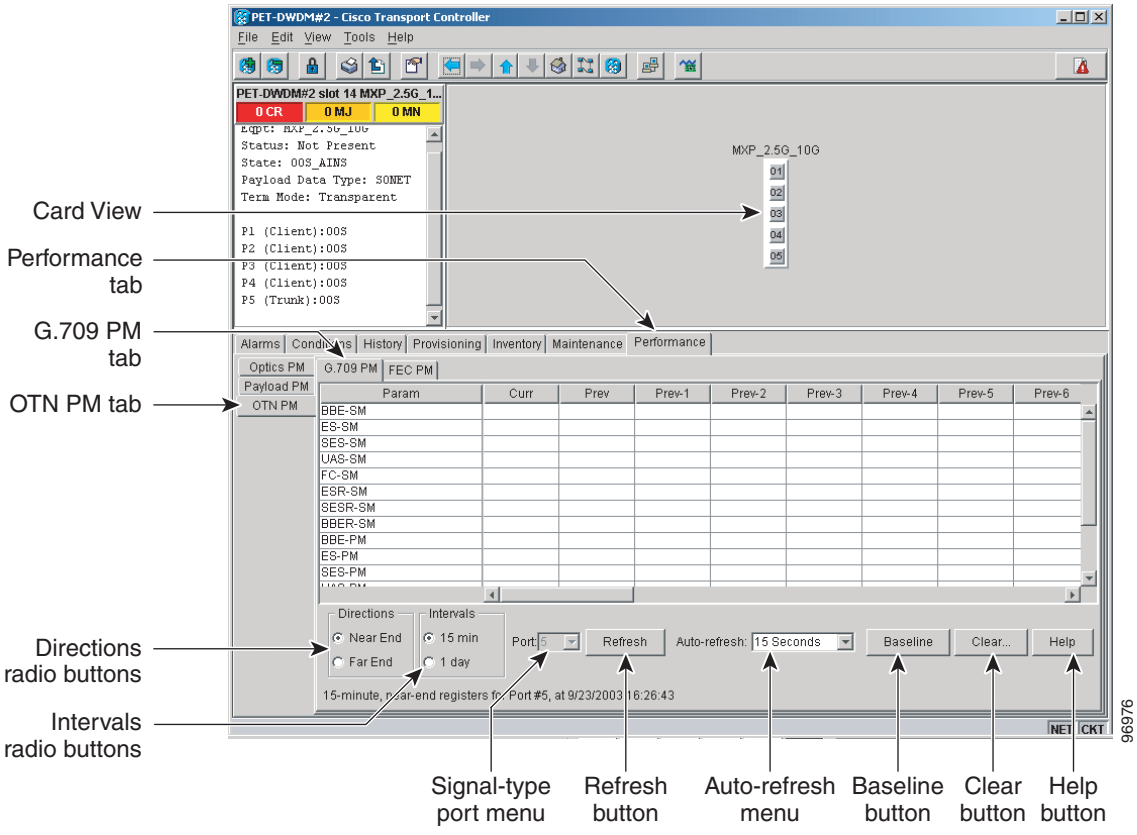

Step 3 View the PM parameter names that appear in the Param column. The PM parameter values appear in the Curr (current) and Prev-*n* (previous) columns. For PM parameter definitions, refer to the *Cisco ONS 15454 SONET and DWDM Troubleshooting Guide*.

Step 4 Click the **FEC PM** tab (Figure 8-11).

Figure 8-11 Viewing OTN FEC Performance Monitoring Information

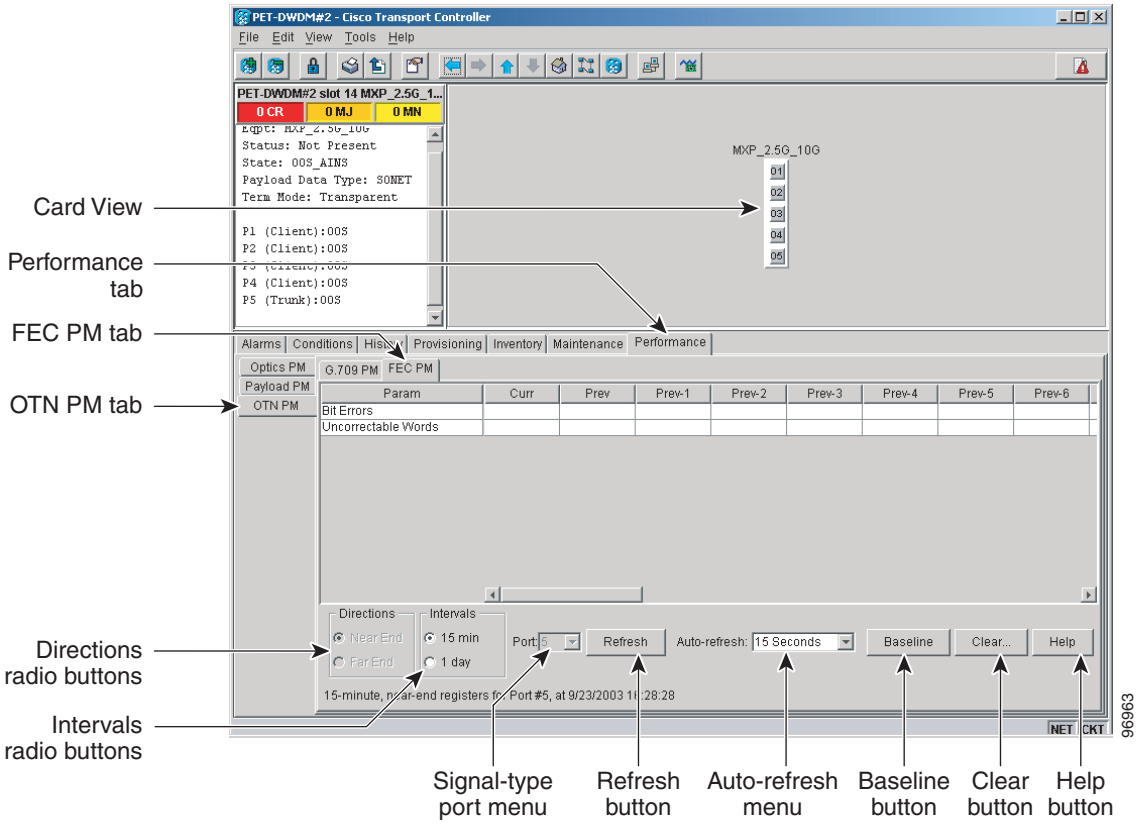

Step 5 View the PM parameter names that appear in the Param column. The PM parameter values appear in the Curr (current) and Prev-*n* (previous) columns. For PM parameter definitions, refer to the *Cisco ONS 15454 SONET and DWDM Troubleshooting Guide*.

Step 6 Return to your originating procedure (NTP).

DLP-G149 View Payload Statistics PM Parameters

Purpose	This task enables you to view current statistical PM counts on an MXP_MR_2.5G or MXPP_MR_2.5G card and port to detect possible performance problems.
Tools/Equipment	None
Prerequisite Procedures	DLP-G46 Log into CTC, page 2-25
Required/As Needed	As needed
Onsite/Remote	Onsite or remote
Security Level	Retrieve or higher

Step 1 In node view, double-click the MXP_MR_2.5G or MXPP_MR_2.5G card where you want to view PM counts. The card view appears.

Step 2 Click the **Performance > Payload PM > Statistics** tabs (Figure 8-12).

Figure 8-12 Statistics Tab on the Card View Performance Window

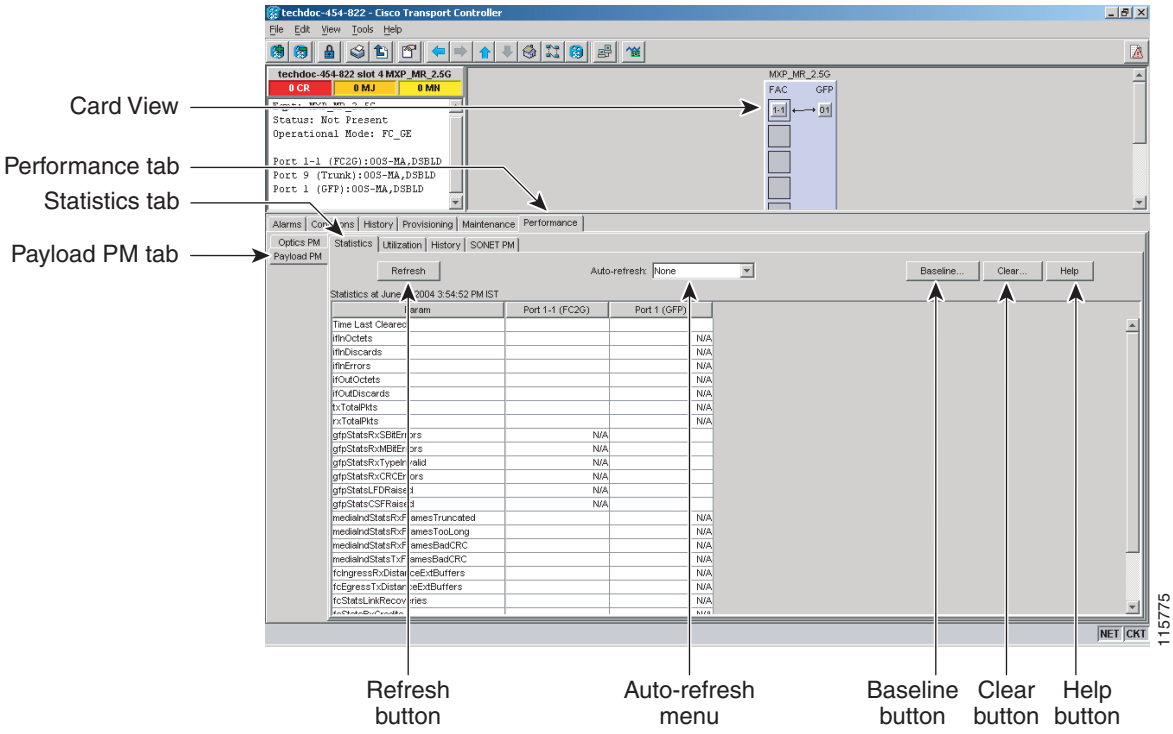

Step 3 Click **Refresh**. Performance monitoring statistics appear for each port on the card.

Step 4 View the PM parameter names that appear in the Param column. The current PM parameter values appear in the Port # columns. For PM parameter definitions, refer to the *Cisco ONS 15454 SONET and DWDM Troubleshooting Guide*.

Note To refresh, reset, or clear PM counts, see the "NTP-G73 Change the PM Display" procedure on page 8-2.

Step 5 Return to your originating procedure (NTP).

DLP-G150 View Payload Utilization PM Parameters

Purpose	This task enables you to view line utilization PM counts on an MXP_MR_2.5G or MXPP_MR_2.5G card and port to detect possible performance problems.
Tools/Equipment	None
Prerequisite Procedures	DLP-G46 Log into CTC, page 2-25
Required/As Needed	As needed
Onsite/Remote	Onsite or remote
Security Level	Retrieve or higher

Step 1 In node view, double-click theMXP_MR_2.5G or MXPP_MR_2.5G card where you want to view PM counts. The card view appears.

Step 2 Click the **Performance > Payload PM > Utilization** tabs (Figure 8-13).

Figure 8-13 Utilization Tab on the Card View Performance Window

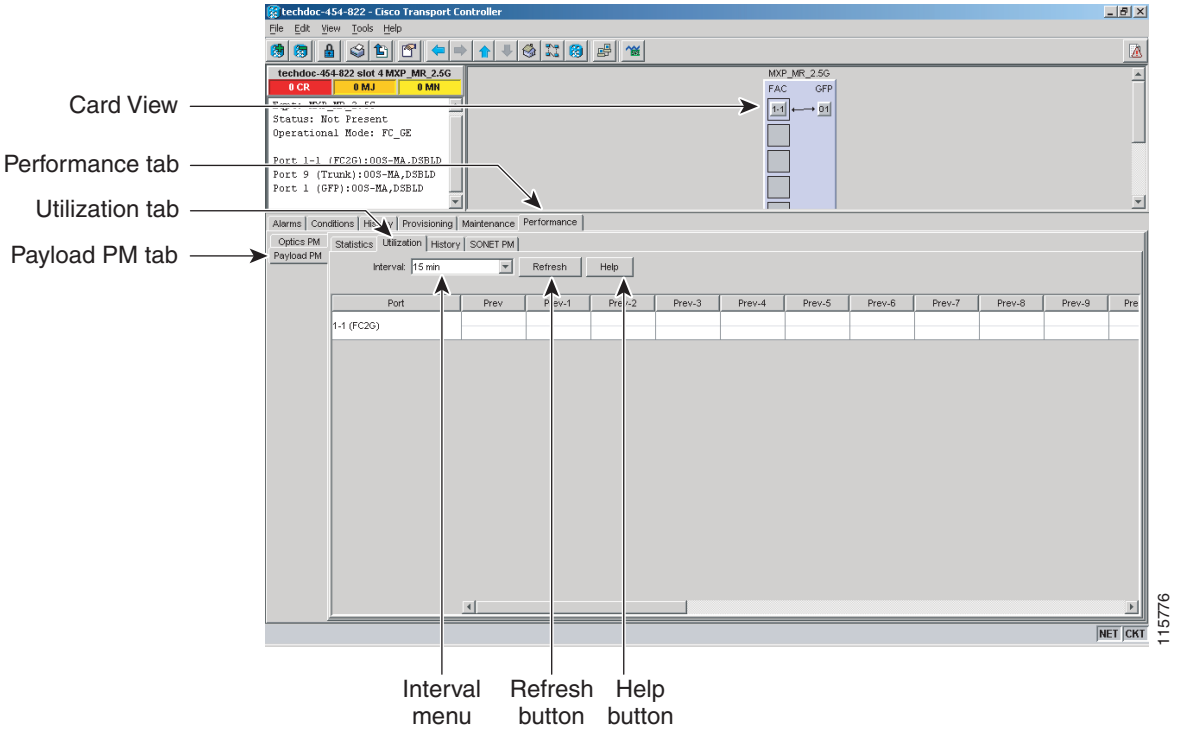

Step 3 Click **Refresh**. Performance monitoring utilization values appear for each port on the card.

Step 4 View the Port # column to find the port you want to monitor.

Step 5 The transmit (Tx) and receive (Rx) bandwidth utilization values for the previous time intervals appear in the Prev-*n* columns. For PM parameter definitions, refer to the *Cisco ONS 15454 SONET and DWDM Troubleshooting Guide*.

Note To refresh, reset, or clear PM counts, see the "NTP-G73 Change the PM Display" procedure on page 8-2.

Step 6 Return to your originating procedure (NTP).

DLP-G151 View Payload History PM Parameters

Purpose	This task enables you to view historical PM counts at selected time intervals on an MXP_MR_2.5G or MXPP_MR_2.5G card and port to detect possible performance problems.
Tools/Equipment	None
Prerequisite Procedures	DLP-G46 Log into CTC, page 2-25
Required/As Needed	As needed
Onsite/Remote	Onsite or remote
Security Level	Retrieve or higher

Step 1 In node view, double-click the MXP_MR_2.5G or MXPP_MR_2.5G card where you want to view PM counts. The card view appears.

Step 2 Click the **Performance** > **Payload PM** > **History** tabs (Figure 8-14).

Figure 8-14 History Tab on the Card View Performance Window

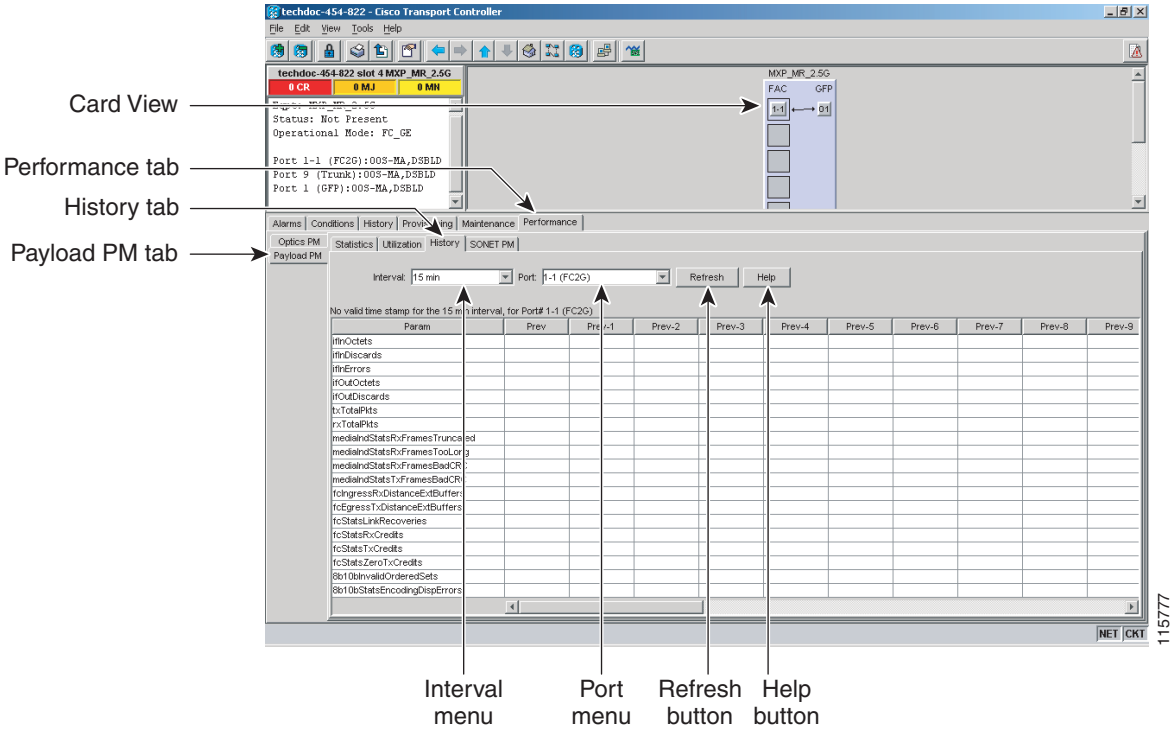

Step 3 Click **Refresh**. Performance monitoring statistics appear for each port on the card.

Step 4 View the PM parameter names that appear in the Param column. The PM parameter values appear in the Prev-*n* columns. For PM parameter definitions, refer to the *Cisco ONS 15454 SONET and DWDM Troubleshooting Guide*.

Note To refresh, reset, or clear PM counts, see the "NTP-G73 Change the PM Display" procedure on page 8-2.

Step 5 Return to your originating procedure (NTP).

DLP-G152 View Payload SONET PM Parameters

Purpose	This task enables you to view SONET PM counts at selected time intervals on an MXP_MR_2.5G or MXPP_MR_2.5G card and port to detect possible performance problems.
Tools/Equipment	None
Prerequisite Procedures	DLP-G46 Log into CTC, page 2-25
Required/As Needed	As needed
Onsite/Remote	Onsite or remote
Security Level	Retrieve or higher

Step 1 In node view, double-click the MXP_MR_2.5G or MXPP_MR_2.5G card where you want to view PM counts. The card view appears.

Step 2 Click the **Performance > Payload PM > SONET PM** tabs (Figure 8-15).

Figure 8-15 SONET PM Tab on the Card View Performance Window

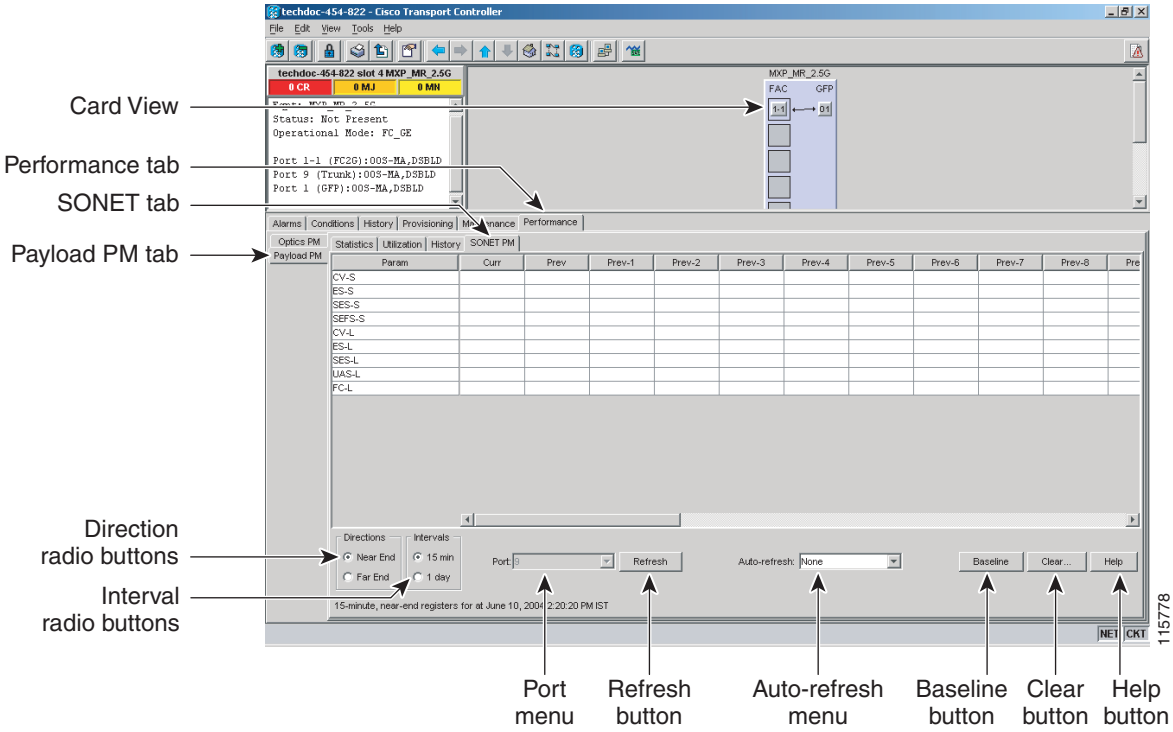

Step 3 Click **Refresh**. Performance monitoring statistics appear for each port on the card.

Step 4 View the PM parameter names that appear in the Param column. The PM parameter values appear in the Prev-*n* columns. For PM parameter definitions, refer to the *Cisco ONS 15454 SONET and DWDM Troubleshooting Guide*.

Note The MXP_MR_2.5G and MXPP_MR_2.5G cards support only OC48/STM16 payload. Each payload has a set of PM parameters.

Note To refresh, reset, or clear PM counts, see the "NTP-G73 Change the PM Display" procedure on page 8-2.

Step 5 Return to your originating procedure (NTP).

DLP-G153 Create RMON Alarm Thresholds

Purpose	This procedure sets up remote monitoring (RMON) to allow network management systems to monitor Ethernet and Fibre Channel ports. This procedure applies to MXP_MR_2.5G, MXPP_MR_2.5G, TXP_MR_2.5G, and TXPP_MR_2.5G cards in GE/FC/FICON/ISC compact mode, and MXP_2.5G_10G, TXP_MR_10G, MXP_2.5G_10E, and TXP_MR_10E cards in Gigabit Ethernet (10GE) mode.
Tools/Equipment	None
Prerequisite Procedures	DLP-G46 Log into CTC, page 2-25
Required/As Needed	As needed
Onsite/Remote	Onsite or remote
Security Level	Provisioning or higher

Step 1 In node view, double-click the card where you want to create the RMON alarm thresholds.

Step 2 In card view, click the **Provisioning** > **Line Thresholds** > **RMON Thresholds** tabs.

Step 3 Click **Create**. The Create Threshold dialog box appears.

Step 4 From the Slot menu, choose the appropriate card.

Step 5 From the Port drop-down list, choose the applicable port on the card you selected.

Step 6 From the Variable drop-down list, choose the variable. See Table 8-1 for a list of the MXP_MR_2.5G/MXPP_MR_2.5G threshold variables available in this field.

Table 8-1 MXP_MR_2.5G/MXPP_MR_2.5G Threshold Variables (MIBs)

Variable	Definition
iflnOctets	Total number of octets received on the interface, including framing octets
ifInDiscards	The number of inbound packets that were chosen to be discarded even though no errors had been detected to prevent their being deliverable to a higher-layer protocol
iflnErrors	Number of inbound packets discarded because they contain errors
ifOutOctets	Total number of transmitted octets, including framing packets
ifOutDiscards	The number of outbound packets that were chosen to be discarded even though no errors had been detected to prevent their being transmitted
txTotalPkts	Total number of transmit packets
rxTotalPkts	Total number of receive packets
mediaIndStatsRxFramesTooLong	Number of packets transmitted that are greater than 1548 bytes
mediaIndStatsRxFramesTruncated	Total number of frames received that are less than 5 bytes
mediaIndStatsRxFramesBadCRC	Total number of frames received with a cyclic redundancy check (CRC) error
mediaIndStatsTxFramesBadCRC	Total number of frames transmitted with a CRC error

Table 8-1 MXP_MR_2.5G/MXPP_MR_2.5G Threshold Variables (MIBs) (continued)

Variable	Definition
8b10bInvalidOrderedSets	Total number of ordered sets not complaint to GE/FC (Gigabit Ethernet/Fibre Channel) standard
8b10bStatsEncodingDispErrors	Total number of code groups that violate GE/FC disparity errors

Step 7 From the Alarm Type drop-down list, indicate whether the rising threshold, falling threshold, or both the rising and falling thresholds will trigger the event.

Step 8 From the Sample Type drop-down list, choose either **Relative** or **Absolute**. Relative restricts the threshold to use the number of occurrences in the user-set sample period. Absolute sets the threshold to use the total number of occurrences, regardless of time period.

Step 9 Enter the appropriate number of seconds for the Sample Period.

Step 10 Enter the appropriate number of occurrences for the Rising Threshold.

Note For a rising type of alarm, the measured value must move from below the falling threshold to above the rising threshold. For example, if a network is running below a rising threshold of 1000 collisions every 15 seconds and a problem causes 1001 collisions in 15 seconds, the excess occurrences trigger an alarm.

Step 11 Enter the appropriate number of occurrences in the Falling Threshold field. In most cases, a falling threshold is set lower than the rising threshold.

Note A falling threshold is the counterpart to a rising threshold. When the number of occurrences is above the rising threshold and then drops below a falling threshold, it resets the rising threshold. For example, when the network problem that caused 1001 collisions in 15 minutes subsides and creates only 799 collisions in 15 minutes, occurrences fall below a falling threshold of 800 collisions. This resets the rising threshold so that if network collisions again spike over a 1000 per 15-minute period, an event again triggers when the rising threshold is crossed. An event is triggered only the first time a rising threshold is exceeded (otherwise, a single network problem might cause a rising threshold to be exceeded multiple times and cause a flood of events).

Step 12 Click **OK** to complete the procedure.

Step 13 Return to your originating procedure (NTP).

DLP-G154 Delete RMON Alarm Thresholds

Purpose	This task deletes RMON threshold crossing alarms for Ethernet and Fibre Channel ports.
Tools/Equipment	None
Prerequisite Procedures	DLP-G153 Create RMON Alarm Thresholds, page 8-28 DLP-G46 Log into CTC, page 2-25
Required/As Needed	As needed
Onsite/Remote	Onsite or remote
Security Level	Provisioning or higher

Step 1 In node view, double-click the card where you want to delete the RMON alarm thresholds.

Step 2 In card view, click the **Provisioning > Line Thresholds > RMON Thresholds** tabs.

Step 3 Click the RMON alarm threshold you want to delete.

Step 4 Click **Delete**. The Delete Threshold dialog box appears.

Step 5 Click **Yes** to delete that threshold.

Step 6 Return to your originating procedure (NTP).

Manage the Node

This chapter explains how to modify node provisioning for the Cisco ONS 15454 and perform common management tasks such as monitoring the dense wavelength division multiplexing (DWDM) automatic power control and span loss values. To provision a new node, see Chapter 3, "Turn Up a Node." To change default network element settings and to view a list of those settings, refer to the *Cisco ONS 15454 Release 4.7 Network Element Defaults* document.

Note Unless otherwise specified, "ONS 15454" refers to both ANSI and ETSI shelf assemblies.

Before You Begin

Before performing the following procedures, investigate all alarms and clear any trouble conditions. Refer to the *Cisco ONS 15454 SONET and DWDM Troubleshooting Guide* as necessary.

This section lists the chapter procedures (NTPs). Turn to a procedure for applicable tasks (DLPs).

1. NTP-G76 Verify Span Loss, page 9-2—Complete this procedure as needed to view or modify the DWDM span loss values.
2. NTP-G77 Manage Automatic Power Control, page 9-4—Complete this procedure as needed to manage the DWDM automatic power control.
3. NTP-G78 View ROADM Node Power Equalization, page 9-6—Complete this procedure as needed to view and update a reconfigurable optical add/drop management node power equalization.
4. NTP-G79 Modify Automatic Node Setup Parameters, page 9-7—Complete as needed.
5. NTP-G80 Change Node Management Information, page 9-8—Complete this procedure as needed to change node name, contact information, latitude, longitude, date, time, and login legal disclaimer.
6. NTP-G81 Change CTC Network Access, page 9-10—Complete this procedure as needed to change the IP address, default router, subnet mask, network configuration settings, and static routes.
7. NTP-G82 Customize the CTC Network View, page 9-15—As needed, complete this procedure to create domains and customize the appearance of the network map, including specifying a different default map, creating domains, selecting your own map or image, and changing the background color.
8. NTP-G83 Modify or Delete Card Protection Settings, page 9-20—Complete as needed.
9. NTP-G84 Initiate and Clear Y-Cable and Splitter External Switching Commands, page 9-23—Complete as needed.

10. NTP-G85 Modify or Delete Communications Channel Terminations and Provisionable Patchcords, page 9-28—Complete this procedure as needed to modify or delete generic communications channel (GCC) and optical service channel (OSC) terminations, and provisionable patchcords.
11. NTP-G86 Convert a Pass-Through Connection to an Add/Drop Connection, page 9-31—Complete this procedure as needed to convert a pass-through connection to an add/drop connection.
12. NTP-G87 Change Node Timing Parameters, page 9-32—Complete as needed.
13. NTP-G88 Modify Users and Change Security, page 9-34—Complete this procedure as needed to make changes to user settings, including security level and security policies, and to delete users.
14. NTP-G89 Change SNMP Settings, page 9-42—Complete as needed.

NTP-G76 Verify Span Loss

Purpose	This procedure verifies the span loss between two DWDM nodes using CTC. You perform this procedure after a node or network modification has occurred and you want to verify that the span loss between the nodes have not changed.
Tools/Equipment	A node provisioning plan prepared by Cisco MetroPlanner is required.
Prerequisite Procedures	All procedures in Chapter 3, "Turn Up a Node."
Required/As Needed	As needed
Onsite/Remote	Onsite or remote
Security Level	Superuser

Step 1 Complete the "DLP-G46 Log into CTC" task on page 2-25. If you are already logged in, continue with Step 2.

Step 2 Perform the following span loss verification tasks as needed:

- Complete the "DLP-G155 Verify Optical Span Loss Using CTC" task on page 9-3 to check span loss using CTC. This task is faster than a span loss measurement using an optical time domain reflectometer (OTDR) and does not require fibers to be removed. However, the resolution is not as precise as an OTDR measurement.
- Complete "DLP-G156 Measure Span Insertion Loss Using an OTDR" task on page 9-4 to measure the span loss using an OTDR.

Stop. **You have completed this procedure**.

DLP-G155 Verify Optical Span Loss Using CTC

Purpose	This procedure verifies span loss values between two DWDM nodes using CTC.
Tools/Equipment	A node provisioning plan prepared by Cisco MetroPlanner is required.
Prerequisite Procedures	DLP-G46 Log into CTC, page 2-25
Required/As Needed	As needed
Onsite/Remote	Onsite or remote
Security Level	Superuser

Step 1 In node view, click the **Provisioning > Comm Channels > OSC** tabs. Verify that two OSC terminations are provisioned and have an In-Service and Normal (IS-NR) (ANSI) or Unlocked-enabled (ETSI) service state.

Step 2 Click the **Maintenance > DWDM > WDM Span Check** tabs.

Step 3 Click **Retrieve Span Loss Values** to retrieve the latest span loss data.

Step 4 View and modify the following information:

- Side—Shows the side to which the span loss values apply, either east or west.
- Min Expected Span Loss (dBm)—Shows the expected minimum span loss (in dBm). You can change the minimum by entering a new value in the field.
- Meas Expected Span Loss (dBm)—Shows the measured span loss (in dBm).
- Max Expected Span Loss (dBm)—Shows the expected maximum span loss (in dBm). You can change the minimum by entering a new value in the field.

Note The minimum and maximum expected span loss values are calculated by Cisco MetroPlanner and imported to the node when you perform the "DLP-G74 Import a Cisco MetroPlanner Configuration File" task on page 3-59.

- Resolution (dBm)—Shows the resolution of the span loss measurement (in dBm):
  - +/– 1.5 dB for measured span losses between 0 and 25 dB
  - +/– 2.5 dB for measured span losses between 25 and 38 dB

Step 5 If you modified the minimum or maximum expected span losses, click **Apply**. If not, continue with Step 6.

Step 6 Return to your originating procedure (NTP).

DLP-G156 Measure Span Insertion Loss Using an OTDR

Purpose	This task measures the span insertion loss using an optical time domain reflectometer (OTDR). You perform this task when OSC terminations fail to turn up properly and initial troubleshooting, including checks of the Optical Service Channel and Combiner/Splitter Module (OSC-CSM) or Optical Service Channel Module (OSCM) port states and physical fiber connections, do not solve the problem.
Tools/Equipment	OTDR test and measurement device.
Prerequisite Procedures	DLP-G75 Create OSC Terminations, page 3-61
Required/As Needed	As needed
Onsite/Remote	Onsite or remote
Security Level	Provisioning or higher

Step 1 Remove one of the fiber connections of the fiber span you will measure.

Step 2 Following the instructions in the OTDR documentation, connect the OTDR to the end of the fiber.

Step 3 Measure the insertion loss using the procedures in the OTDR documentation.

Step 4 Display your site plan in MetroPlanner. Enter the insertion loss values calculated from the insertion loss measurement and recalculate the site plan. If the new insertion loss values are accepted, MetroPlanner will create a new configuration file. If so, continue with Step 5. If the new insertion loss values require changes to the physical site, for example, additional cards or nodes, install the new nodes and cards following procedures in Chapter 1, "Install the Shelf and Common Control Cards," and Chapter 3, "Turn Up a Node."

Step 5 If the span is out of range and the MetroPlanner design changed, complete the "DLP-G74 Import a Cisco MetroPlanner Configuration File" task on page 3-59 at each node in the network.

Step 6 Return to your originating procedure (NTP).

NTP-G77 Manage Automatic Power Control

Purpose	This procedure manages the DWDM automatic power control (APC).
Tools/Equipment	A node provisioning plan prepared by Cisco MetroPlanner is required.
Prerequisite Procedures	All procedures in Chapter 3, "Turn Up a Node."
Required/As Needed	As needed
Onsite/Remote	Onsite or remote
Security Level	Superuser

Step 1 Complete the "DLP-G46 Log into CTC" task on page 2-25. If you are already logged in, continue with Step 2.

Step 2 Complete the following tasks as necessary:

- DLP-G157 Disable Automatic Power Control, page 9-5

- DLP-G158 Enable Automatic Power Control, page 9-5
- DLP-G159 Refresh Automatic Power Control Information, page 9-6

Stop. **You have completed this procedure**.

DLP-G157 Disable Automatic Power Control

Purpose	This task disables the DWDM automatic power control (APC).
Tools/Equipment	A node provisioning plan prepared by Cisco MetroPlanner is required.
Prerequisite Procedures	All procedures in Chapter 3, "Turn Up a Node."
Required/As Needed	As needed
Onsite/Remote	Onsite or remote
Security Level	Superuser

Caution Disable APC only to perform specific troubleshooting or node provisioning tasks. Always enable APC as soon as the tasks are completed. Leaving APC disabled can cause traffic loss.

Step 1 Click the **Maintenance > DWDM > APC** tabs.

Step 2 Click **Disable APC**,

Step 3 On the confirmation dialog box, Click **Yes**.

Step 4 Return to your originating procedure.

DLP-G158 Enable Automatic Power Control

Purpose	This procedure enables the DWDM automatic power control (APC).
Tools/Equipment	A node provisioning plan prepared by Cisco MetroPlanner is required.
Prerequisite Procedures	All procedures in Chapter 3, "Turn Up a Node."
Required/As Needed	As needed
Onsite/Remote	Onsite or remote
Security Level	Superuser

Caution Disable APC only to perform specific troubleshooting or node provisioning tasks. Always enable APC as soon as the tasks are completed. Leaving APC disabled can cause traffic loss.

Step 1 Click the **Maintenance > DWDM > APC** tabs.

Step 2 Click **Enable APC**.

Step 3 On the confirmation dialog box, Click **Yes**.

Step 4 Return to your originating procedure.

DLP-G159 Refresh Automatic Power Control Information

Purpose	This procedure refreshes the DWDM automatic power control information.
Tools/Equipment	A node provisioning plan prepared by Cisco MetroPlanner is required.
Prerequisite Procedures	All procedures in Chapter 3, "Turn Up a Node."
Required/As Needed	As needed
Onsite/Remote	Onsite or remote
Security Level	Superuser

Step 1 Click the **Maintenance > DWDM > APC** tabs.

Step 2 Click **Refresh**.

Step 3 Return to your originating procedure.

Stop. **You have completed this procedure**.

NTP-G78 View ROADM Node Power Equalization

Purpose	This task allows you to view reconfigurable optical add/drop multiplexing (ROADM) node power equalization levels.
Tools/Equipment	None
Prerequisite Procedures	DLP-G46 Log into CTC, page 2-25
Required/As Needed	As needed
Onsite/Remote	Onsite or remote
Security Level	Superuser

Step 1 Complete the "DLP-G46 Log into CTC" task on page 2-25. If you are already logged in, continue with Step 2.

Step 2 In node view, click the **Maintenance > DWDM > Power Monitoring** tabs.

Step 3 On the Power Monitoring tab, view the following east-to-west (E > W) and west-to-east (W > E) power information:

- Padd—Add power.
- Ppt—Pass-through power.
- Pout—Output power. The output power for all wavelengths does not need to be exactly the same for all wavelengths, but does need to be within the same range. Figure 9-1 shows an example of ROADM node with equalized output power.

Figure 9-1 Equalized ROADM Power Example

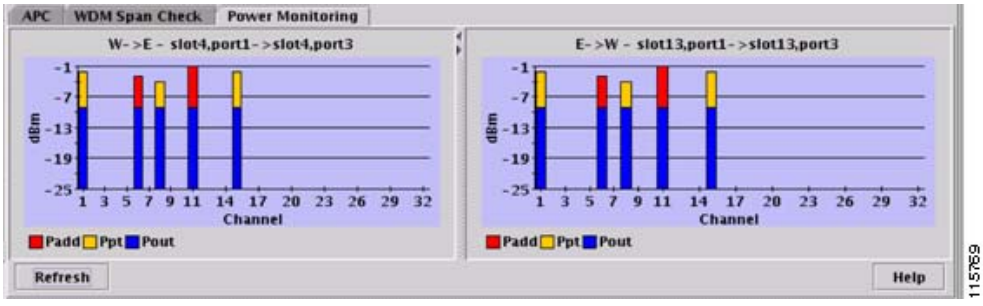

Step 4 If needed, click **Refresh** to update the display.

Stop. You have completed this procedure.

NTP-G79 Modify Automatic Node Setup Parameters

Purpose	Use this procedure to manually modify the DWDM automatic node setup (ANS) parameters.
Tools/Equipment	A node provisioning plan prepared by Cisco MetroPlanner is required.
Prerequisite Procedures	You must use Cisco MetroPlanner or another DWDM network calculation tool to prepare a configuration file for your network. NTP-G30 Install the DWDM Cards, page 3-26
Required/As Needed	As needed
Onsite/Remote	Onsite or remote
Security Level	Superuser

Caution ANS parameters are normally not changed manually. Changes to the parameters at one node often require adjustments at other network nodes, and anticipating the changes is difficult. In general, you should always enter node or network changes in Cisco MetroPlanner, recalculate the parameters, then import them into the node and run ANS.

Step 1 Complete the "DLP-G46 Log into CTC" task on page 2-25. If you are already logged in, continue with Step 2.

Step 2 Click the **WDM-ANS > Provisioning** tabs. ANS parameter groups are shown in tree view under the Selector area. Click a parameter group to view the individual parameters in it, for example, if you click the node name, all ANS parameters are shown. If you click West Side, only West Side parameters are shown, and if you click Amplifiers, only amplifier parameters are shown.

For a list of ANS parameters by node type, refer to Table 15-4 on page 15-26. For an ANS parameter summary including minimum, maximum, and default values, refer to Table 15-5 on page 15-29.

Step 3 To modify a parameter's value, click the parameter under the Parameter column and modify its value in the Value column.

Step 4 Click **Apply**.

Step 5 Click the **Port Status** tab. Click **Launch ANS**.

ANS (Automatic Node Setup) automatically calculates the variable optical attenuator (VOAs) setpoints to match the expected channel profile at the amplifier input port.

Stop. **You have completed this procedure**.

NTP-G80 Change Node Management Information

Purpose	This procedure changes the node name, date, time, contact information, and the login legal disclaimer.
Tools/Equipment	None
Prerequisite Procedures	NTP-G24 Set Up Name, Date, Time, and Contact Information, page 3-6
Required/As Needed	As needed
Onsite/Remote	Onsite or remote
Security Level	Provisioning or higher

Step 1 Complete the "DLP-G46 Log into CTC" task on page 2-25. If you are already logged in, continue with Step 2.

Step 2 Complete the "NTP-G103 Back Up the Database" procedure on page 11-2.

Step 3 In node view, click the **Provisioning > General** tabs.

Step 4 Complete the "DLP-G160 Change the Node Name, Date, Time, and Contact Information" task on page 9-8, as needed.

Step 5 Complete the "DLP-G161 Change the Login Legal Disclaimer" task on page 9-9, as needed.

Step 6 After confirming the changes, complete the "NTP-G103 Back Up the Database" procedure on page 11-2.

Stop. You have completed this procedure.

DLP-G160 Change the Node Name, Date, Time, and Contact Information

Purpose	This procedure changes basic information such as node name, date, time, and contact information.
Tools/Equipment	None
Prerequisite Procedures	DLP-G46 Log into CTC, page 2-25
Required/As Needed	As needed
Onsite/Remote	Onsite or remote
Security Level	Provisioning or higher

Caution Changing the date, time, or time zone might invalidate the node's performance monitoring counters.

Step 1 In node view, click the **Provisioning > General** tabs.

Step 2 Change any of the following:

- General: Node Name
- General: Contact
- Location: Latitude
- Location: Longitude
- Location: Description

Note To see changes to longitude or latitude on the network map, you must go to network view and right-click the specified node, then click **Reset Node Position**.

- Time: Use NTP/SNTP Server
- Time: Date (M/D/Y)
- Time: Time (H:M:S)
- Time: Time Zone
- Time: Use Daylight Saving Time
- AIS-V Insertion On STS-1 Signal Degrade - Path: Insert AIS-V on STS-1 SD-P
- AIS-V Insertion On STS-1 Signal Degrade - Path: SD-P BER

See the "NTP-G24 Set Up Name, Date, Time, and Contact Information" procedure on page 3-6 for detailed field descriptions.

Step 3 Click **Apply**. Confirm that the changes appear; if not, repeat the task.

Step 4 Return to your originating procedure (NTP).

DLP-G161 Change the Login Legal Disclaimer

Purpose	This task modifies the legal disclaimer statement shown in the CTC login dialog box so that it will display customer-specific information when users log into the network.
Tools/Equipment	None
Prerequisite Procedures	DLP-G46 Log into CTC, page 2-25
Required/As Needed	As needed
Onsite/Remote	Onsite or remote
Security Level	Superuser

Step 1 In node view, click the **Provisioning > Security > Legal Disclaimer > HTML** tabs.

Step 2 The existing statement is a default, non-customer-specific disclaimer. If you want to edit this statement with specifics for your company, you can change the text. Use the HTML commands in Table 9-1 to format the text, as needed.

Table 9-1 HTML Commands for the Legal Disclaimer

Command	Description
	Begins boldface font
	Ends boldface font
	Aligns type in the center of the window
	Ends the center alignment
<font=*n*> (where *n* = point size)	Changes the font to the new size
	Ends the font size command
<p>	Creates a line break
<sub>	Begins subscript
</sub>	Ends subscript
<sup>	Begins superscript
</sup>	Ends superscript
<u>	Begins underline
</u>	Ends underline

Step 3 If you want to preview your changed statement and formatting, click the **Preview** subtab.

Step 4 Click **Apply**.

Step 5 Return to your originating procedure (NTP).

NTP-G81 Change CTC Network Access

Purpose	This procedure changes or deletes network information, including IP settings, static routes, Open Shortest Path First (OSPF) options, proxy tunnels, and firewall tunnels.
Tools/Equipment	None
Prerequisite Procedures	NTP-G26 Set Up CTC Network Access, page 3-8
Required/As Needed	As needed
Onsite/Remote	Onsite or remote
Security Level	Provisioning or higher

Note Additional ONS 15454 networking information and procedures, including IP addressing examples, static route scenarios, OSPF protocol, and routing information protocol options are provided in Chapter 19, "CTC Connectivity Reference."

Step 1 Complete the "DLP-G46 Log into CTC" task on page 2-25. If you are already logged in, continue with Step 2.

Step 2 Complete the "NTP-G103 Back Up the Database" procedure on page 11-2.

Step 3 Perform any of the following tasks as needed:

- DLP-G162 Change IP Settings, page 9-11
- DLP-G163 Modify a Static Route, page 9-12
- DLP-G164 Delete a Static Route, page 9-13
- DLP-G165 Disable OSPF, page 9-13
- DLP-G59 Set Up or Change Open Shortest Path First Protocol, page 3-16
- DLP-G166 Delete a Proxy Tunnel, page 9-14
- DLP-G167 Delete a Firewall Tunnel, page 9-14

Step 4 Complete the "NTP-G103 Back Up the Database" procedure on page 11-2.

Stop. You have completed this procedure.

DLP-G162 Change IP Settings

Purpose	This task changes the IP address, subnet mask, default router, DHCP access, firewall IIOP listener port, LCD IP display, and proxy server settings.
Tools/Equipment	None
Prerequisite Procedures	DLP-G46 Log into CTC, page 2-25 DLP-G56 Provision IP Settings, page 3-9
Required/As Needed	As needed
Onsite/Remote	Onsite or remote
Security Level	Superuser

Caution Changing the node IP address, subnet mask, or IIOP listener port causes the TCC2s to reboot. If Ethernet circuits using Spanning Tree Protocol (STP) originate or terminate on E-Series Ethernet cards installed in the node, circuit traffic will be lost for several minutes while the spanning trees reconverge. Other circuits are not affected by TCC2 reboots.

Step 1 In node view, click the **Provisioning > Network > General** tabs.

Step 2 Change any of the following:

- IP Address
- Suppress CTC IP Display
- LCD IP Setting
- Default Router
- Forward DHCP Request To
- MAC Address
- Net/Subnet Mask Length
- TCC CORBA (IIOP) Listener Port

- Gateway Settings

See the "DLP-G56 Provision IP Settings" task on page 3-9 for detailed field descriptions.

Step 3 Click **Apply**.

If you changed a network field that will cause the node to reboot, such as the IP address, subnet mask, or TCC CORBA Listener Port, the Change Network Configuration confirmation dialog box appears. If you changed a gateway setting, a confirmation appropriate to the gateway field appears.

Step 4 If a confirmation dialog box appears, click **Yes**.

If you changed an IP address, subnet mask length, or TCC CORBA (IIOP) Listener Port, both ONS 15454 TCC2 cards will reboot, one at a time. A TCC2 card reboot causes a temporary loss of connectivity to the node, but traffic is unaffected.

Step 5 Confirm that the changes appear on the Provisioning > Network > General tab. If the changes do not appear, repeat the task. Refer to the *Cisco ONS 15454 SONET and DWDM Troubleshooting Guide* as necessary.

Step 6 Return to your originating procedure (NTP).

DLP-G163 Modify a Static Route

Purpose	This task modifies a static route on an ONS 15454.
Tools/Equipment	None
Prerequisite Procedures	DLP-G46 Log into CTC, page 2-25
	DLP-G58 Create a Static Route, page 3-15
Required/As Needed	As needed
Onsite/Remote	Onsite or remote
Security Level	Provisioning or higher

Step 1 In node view, click the **Provisioning** > **Network** tabs.

Step 2 Click the **Static Routing** tab.

Step 3 Click the static route you want to edit.

Step 4 Click **Edit**.

Step 5 In the Edit Selected Static Route dialog box, enter the following:

- Mask
- Next Hop
- Cost

See the "DLP-G58 Create a Static Route" task on page 3-15 for detailed field descriptions.

Step 6 Click **OK**.

Step 7 Return to your originating procedure (NTP).

DLP-G164 Delete a Static Route

Purpose	This task deletes an existing static route on an ONS 15454.
Tools/Equipment	None
Prerequisite Procedures	DLP-G46 Log into CTC, page 2-25 DLP-G58 Create a Static Route, page 3-15
Required/As Needed	As needed
Onsite/Remote	Onsite or remote
Security Level	Provisioning or higher

Step 1 In node view, click the **Provisioning** > **Network** > **Static Routing** tabs.

Step 2 Click the static route you want to delete.

Step 3 Click **Delete**. A confirmation dialog box appears.

Step 4 Click **Yes**.

Step 5 Return to your originating procedure (NTP).

DLP-G165 Disable OSPF

Purpose	This task disables the Open Shortest Path First (OSPF) routing protocol process for an ONS 15454 LAN.
Tools/Equipment	None
Prerequisite Procedures	DLP-G46 Log into CTC, page 2-25 DLP-G59 Set Up or Change Open Shortest Path First Protocol, page 3-16
Required/As Needed	As needed
Onsite/Remote	Onsite or remote
Security Level	Provisioning or higher

Step 1 In node view, click the **Provisioning** > **Network** > **OSPF** tabs. The OSPF subtab has several options.

Step 2 In the OSPF on LAN area, uncheck the **OSPF active on LAN** check box.

Step 3 Click **Apply**. Confirm that the changes appear; if not, repeat the task.

Step 4 Return to your originating procedure (NTP).

DLP-G166 Delete a Proxy Tunnel

Purpose	This task removes a proxy tunnel.
Tools/Equipment	None
Prerequisite Procedures	DLP-G46 Log into CTC, page 2-25
Required/As Needed	As needed
Onsite/Remote	Onsite or remote
Security Level	Superuser

Step 1 Click the **Provisioning > Network > Proxy** subtabs.

Step 2 Click the proxy tunnel that you want to delete.

Step 3 Click **Delete**.

Step 4 Continue with your originating procedure (NTP).

DLP-G167 Delete a Firewall Tunnel

Purpose	This task removes a firewall tunnel.
Tools/Equipment	None
Prerequisite Procedures	DLP-G46 Log into CTC, page 2-25
Required/As Needed	As needed
Onsite/Remote	Onsite or remote
Security Level	Superuser

Step 1 Click the **Provisioning > Network > Firewall** subtabs.

Step 2 Click the firewall tunnel that you want to delete.

Step 3 Click **Delete**.

Step 4 Return to your originating procedure (NTP).

NTP-G82 Customize the CTC Network View

Purpose	This procedure modifies the CTC network view, including grouping nodes into domains for a less-cluttered display, changing the network view background color, and using a custom image for the network view background.
Tools/Equipment	None
Prerequisite Procedures	None
Required/As needed	As needed
Onsite/Remote	Onsite or remote
Security Level	Provisioning or higher

Step 1 Complete the "DLP-G46 Log into CTC" task on page 2-25. If you are already logged in, continue with Step 2.

Step 2 Complete the following tasks, as needed:

- DLP-G168 Change the Network View Background Color, page 9-15
- DLP-G169 Change the Default Network View Background Map, page 9-16
- DLP-G170 Apply a Custom Network View Background Map, page 9-17
- DLP-G171 Create Domain Icons, page 9-17
- DLP-G172 Manage Domain Icons, page 9-18
- DLP-G173 Enable Dialog Box Do-Not-Display Option, page 9-19
- DLP-G174 Switch Between TDM and DWDM Network Views, page 9-20

Stop. You have completed this procedure.

DLP-G168 Change the Network View Background Color

Purpose	This task changes the network view background color or the domain view background color (the area displayed when you open a domain).
Tools/Equipment	None
Prerequisite procedures	DLP-G46 Log into CTC, page 2-25
Required/As needed	As needed
Onsite/Remote	Onsite or remote
Security Level	Retrieve or higher

Note If you modify background colors, the change is stored in your CTC user profile on the computer. The change does not affect other CTC users.

Step 1 From the View menu, choose **Go to Network View**.

Step 2 If you want to change a domain background, double-click the domain. If not, continue with Step 3.

Step 3 Right-click the network view or domain map area and choose **Set Background Color** from the shortcut menu.

Step 4 In the Choose Color dialog box, select a background color.

Step 5 Click **OK**.

Step 6 Return to your originating procedure (NTP).

DLP-G169 Change the Default Network View Background Map

Purpose	This task changes the default map of the CTC network view.
Tools/Equipment	None
Prerequisite procedures	DLP-G46 Log into CTC, page 2-25
Required/As needed	As needed
Onsite/Remote	Onsite or remote
Security Level	Superuser

Note If you modify the background image, the change is stored in your CTC user profile on the computer. The change does not affect other CTC users.

Step 1 From the Edit menu, choose **Preferences > Map** and check the **Use Default Map** check box.

Step 2 In the node view, click the **Provisioning > Defaults** tabs.

Step 3 In the Defaults Selector area, choose **CTC** and then **network**.

Step 4 Click the **Default Value** field and choose a default map from the drop-down list. Map choices are: Germany, Japan, Netherlands, South Korea, United Kingdom, and the United States (default).

Step 5 Click **Apply**. The new network map appears.

Step 6 Click **OK**.

Step 7 If the ONS 15454 icons are not visible, right-click the network view and choose **Zoom Out**. Repeat until all the ONS 15454 icons are visible. (You can also choose **Fit Graph to Window**.)

Step 8 If you need to reposition the node icons, drag and drop them one at a time to a new location on the map.

Step 9 If you want to change the magnification of the icons, right-click the network view and choose **Zoom In**. Repeat until the ONS 15454 icons are displayed at the magnification you want.

Step 10 Return to your originating procedure (NTP).

DLP-G170 Apply a Custom Network View Background Map

Purpose	This task changes the background image or map of the CTC network view.
Tools/Equipment	None
Prerequisite procedures	DLP-G46 Log into CTC, page 2-25
Required/As needed	As needed
Onsite/Remote	Onsite or remote
Security Level	Retrieve or higher

Note You can replace the network view background image with any JPEG or GIF image that is accessible on a local or network drive. If you apply a custom background image, the change is stored in your CTC user profile on the computer. The change does not affect other CTC users.

Step 1 From the Edit menu, choose **Preferences > Map** and uncheck the **Use Default Map** check box.

Step 2 From the View menu, choose **Go to Network View**.

Step 3 Right-click the network or domain map and choose **Set Background Image**.

Step 4 Click **Browse**. Navigate to the graphic file you want to use as a background.

Step 5 Select the file. Click **Open**.

Step 6 Click **Apply** and then click **OK**.

Step 7 If the ONS 15454 icons are not visible, right-click the network view and choose **Zoom Out**. Repeat this step until all the ONS 15454 icons are visible.

Step 8 If you need to reposition the node icons, drag and drop them one at a time to a new location on the map.

Step 9 If you want to change the magnification of the icons, right-click the network view and choose **Zoom In**. Repeat until the ONS 15454 icons are displayed at the magnification you want.

Step 10 Return to your originating procedure (NTP).

DLP-G171 Create Domain Icons

Purpose	This task creates a domain, which is an icon that groups ONS 15454 icons in CTC network view.
Tools/Equipment	None
Prerequisite procedures	DLP-G46 Log into CTC, page 2-25
Required/As needed	As needed
Onsite/Remote	Onsite or remote
Security Level	Provisioning or higher

Note Domains created by one user are visible to all users who log into the network.

Step 1 From the View menu, choose **Go to Network View**.

Step 2 Right-click the network map and choose **Create New Domain** from the shortcut menu.

Step 3 When the domain icon appears on the map, click the map name and type the domain name.

Step 4 Press **Enter**.

Step 5 Return to your originating procedure (NTP).

DLP-G172 Manage Domain Icons

Purpose	This task manages CTC network view domain icons.
Tools/Equipment	None
Prerequisite procedures	DLP-G46 Log into CTC, page 2-25 DLP-G171 Create Domain Icons, page 9-17
Required/As needed	As needed
Onsite/Remote	Onsite or remote
Security Level	Provisioning or higher

Note All domain changes, such as added or removed nodes, are visible to all users who log into the network.

Step 1 From the View menu, choose **Go to Network View**.

Step 2 Locate the domain action that you want to perform in Table 9-2 and complete the appropriate steps.

Table 9-2 Managing Domains

Domain Action	Steps
Move a domain	Press **Ctrl** and drag and drop the domain icon to the new location.
Rename a domain	Right-click the domain icon and choose **Rename Domain** from the shortcut menu. Type the new name in the domain name field.
Add a node to a domain	Drag and drop the node icon to the domain icon.
Move a node from a domain to the network map	Open the domain and right-click a node. Choose **Move Node Back to Parent View**.
Open a domain	• Double-click the domain icon, or • Right-click the domain and choose **Open Domain**.
Return to network view	Right-click the domain view area and choose **Go to Parent View** from the shortcut menu.
Preview domain contents	Right-click the domain icon and choose **Show Domain Overview**. The domain icon shows a small preview of the nodes in the domain. To turn off the domain overview, right-click the overview and select **Show Domain Overview**.
Remove domain	Right-click the domain icon and choose **Remove Domain**. Any nodes in the domain are returned to the network map.

Step 3 Return to your originating procedure (NTP).

DLP-G173 Enable Dialog Box Do-Not-Display Option

Purpose	Use this task to ensure that a user-selected "Do not display" dialog box preference is enabled for subsequent sessions or to disable the "Do not display" option.
Tools/Equipment	None
Prerequisite procedures	DLP-G46 Log into CTC, page 2-25
Required/As needed	As needed
Onsite/Remote	Onsite or remote
Security Level	Provisioning or higher

Note If any user who has rights to perform an operation (for example, creating a circuit) selects the "Do not show this dialog again" check box in a dialog box, the dialog box is not displayed for any other users who perform that operation on the network from the same computer unless the command is overridden using the following task. (The preference is stored on the computer, not in the node database.)

Step 1 From the Edit menu, choose **Preferences**.

Step 2 In the Preferences dialog box, click the **General** tab.

The Preferences Management area field lists all dialog boxes where "Do not show this dialog again" is enabled.

Step 3 Choose one of the following options, or uncheck the individual dialog boxes that you want to appear:

- **Don't Show Any**—Hides all do-not-display check boxes.
- **Show All**—Overrides do-not-display check box selections and displays all dialog boxes.

Step 4 Click **OK**.

Step 5 Return to your originating procedure (NTP).

DLP-G174 Switch Between TDM and DWDM Network Views

Purpose	Use this task to switch between TDM (time division multiplexing) and DWDM (dense wavelength division multiplexing) network views.
Tools/Equipment	None
Prerequisite procedures	DLP-G46 Log into CTC, page 2-25
Required/As needed	As needed
Onsite/Remote	Onsite or remote
Security Level	Retrieve or higher

Step 1 From the View menu, choose **Go to Network View**.

Step 2 From the Network Scope drop-down list on the toolbar, choose one of the following:

- **All**—Displays both TDM and DWDM nodes
- **TDM**—Displays only ONS 15454s with SONET or SDH cards including the transponder and muxponder cards.
- **DWDM**—Displays only ONS 15454s with DWDM cards, including the transponder and muxponder cards.

Step 3 Return to your originating procedure (NTP).

NTP-G83 Modify or Delete Card Protection Settings

Purpose	This procedure modifies and deletes card protection settings.
Tools/Equipment	None
Prerequisite Procedures	NTP-G33 Create a Y-Cable Protection Group, page 3-33
Required/As Needed	As needed
Onsite/Remote	Onsite or remote
Security Level	Provisioning or higher

Caution Modifying and deleting protection groups can be service affecting.

Step 1 Complete the "DLP-G46 Log into CTC" task on page 2-25. If you are already logged in, continue with Step 2.

Step 2 Complete the "NTP-G103 Back Up the Database" procedure on page 11-2.

Step 3 Perform any of the following tasks as needed:

- DLP-G175 Modify a Y-Cable Protection Group, page 9-21
- DLP-G176 Modify a Splitter Protection Group, page 9-22
- DLP-G177 Delete a Y-Cable Protection Group, page 9-22

Step 4 Complete the "NTP-G103 Back Up the Database" procedure on page 11-2.

Stop. You have completed this procedure.

DLP-G175 Modify a Y-Cable Protection Group

Purpose	This task modifies a Y-cable protection group for any client port on a MXP_2.5G_10G, TXP_MR_2.5G, or TXP_MR_10G card.
Tools/Equipment	None
Prerequisite Procedures	NTP-G33 Create a Y-Cable Protection Group, page 3-33 DLP-G46 Log into CTC, page 2-25
Required/As Needed	As needed
Onsite/Remote	Onsite or remote
Security Level	Provisioning or higher

Step 1 In node view, click the **Provisioning** > **Protection** tabs.

Step 2 In the Protection Groups area, click the Y-cable protection group that you want to modify.

Step 3 In the Selected Group area, you can modify the following, as needed:

- Name—Type the changes to the protection group name. The name can have up to 32 alphanumeric characters.
- Revertive—Check this box if you want traffic to revert to the working card after failure conditions stay corrected for the amount of time chosen from the Reversion Time list. Uncheck this box if you do not want traffic to revert.
- Reversion time—If the Revertive check box is selected, choose the reversion time from the Reversion time drop-down list. The range is 0.5 to 12.0 minutes. The default is 5.0 minutes. This is the amount of time that will elapse before the traffic reverts to the working card. Traffic can revert when conditions causing the switch are cleared.

Step 4 Click **Apply**. Confirm that the changes appear; if not, repeat the task.

Step 5 Return to your originating procedure (NTP).

DLP-G176 Modify a Splitter Protection Group

Purpose	This task modifies a Splitter protection group for any client port on a TXPP_MR_2.5G card or MXPP_MR_2.5G. Splitter protection is automatically created when the TXPP transponder or MXPP muxponder card is installed.
Tools/Equipment	None
Prerequisite Procedures	DLP-G46 Log into CTC, page 2-25
Required/As Needed	As needed
Onsite/Remote	Onsite or remote
Security Level	Provisioning or higher

Step 1 In node view, click the **Provisioning** > **Protection** tabs.

Step 2 In the Protection Groups area, click the Splitter protection group that you want to modify.

Step 3 In the Selected Group area, you can modify the following, as needed:

- Name—Type the changes to the protection group name. The name can have up to 32 alphanumeric characters.
- Revertive—Check this box if you want traffic to revert to the working card after failure conditions stay corrected for the amount of time chosen from the Reversion Time list. Uncheck this box if you do not want traffic to revert.
- Reversion time—If the Revertive check box is selected, choose the reversion time from the Reversion time drop-down list. The range is 0.5 to 12.0 minutes. The default is 5.0 minutes. This is the amount of time that will elapse before the traffic reverts to the working card. Traffic can revert when conditions causing the switch are cleared.

Step 4 Click **Apply**. Confirm that the changes appear; if not, repeat the task.

Step 5 Return to your originating procedure (NTP).

DLP-G177 Delete a Y-Cable Protection Group

Purpose	This task deletes a Y-Cable protection group.
Tools/Equipment	None
Prerequisite Procedures	DLP-G46 Log into CTC, page 2-25
Required/As Needed	As needed
Onsite/Remote	Onsite or remote
Security Level	Provisioning or higher

Step 1 In node view, click the **Provisioning** > **Protection** tabs.

Step 2 In the Protection Groups area, click the protection group you want to delete.

Step 3 Click **Delete**.

Step 4 Click **Yes** in the Delete Protection Group dialog box. Confirm that the changes appear; if they do not, repeat Steps 1 through 3.

Step 5 Return to your originating procedure (NTP).

NTP-G84 Initiate and Clear Y-Cable and Splitter External Switching Commands

Purpose	This procedure describes how to apply and remove a Manual and Force protection switches on Y-cable and splitter protection groups. It also describes how to apply and remove a Lock On or Lock Out protection command to a Y-cable protection group.
Tools/Equipment	None
Prerequisite Procedures	NTP-G32 Install the Transponder and Muxponder Cards, page 3-30 NTP-G33 Create a Y-Cable Protection Group, page 3-33
Required/As Needed	As needed
Onsite/Remote	Onsite
Security Level	Superuser

Note Splitter protection groups are automatically created when you install a TXPP_MR_2.5G or MXPP_MR_2.5G card.

Step 1 Complete the "DLP-G46 Log into CTC" task on page 2-25. If you are already logged in, continue with Step 2.

Step 2 To perform a Manual protection switch, complete the "DLP-G178 Apply a Manual Y-Cable or Splitter Protection Switch" task on page 9-24.

Step 3 To perform a Force protection switch, complete the "DLP-G179 Apply a Force Y-Cable or Splitter Protection Switch" task on page 9-24.

Step 4 To clear a Force or Manual protection switch, complete the "DLP-G180 Clear a Manual or Force Y-Cable or Splitter Protection Switch" task on page 9-25.

Step 5 To prevent traffic on a working or protect card from switching to the other card in the pair, complete the "DLP-G181 Apply a Lock On" task on page 9-26.

Step 6 To prevent traffic from switching to the protect card, complete the "DLP-G182 Apply a Lock Out" task on page 9-26.

Step 7 To remove a lock-on or lockout and return a protection group to its usual switching method, complete the "DLP-G183 Clear a Lock On or Lock Out" task on page 9-27.

Stop. You have completed this procedure.

DLP-G178 Apply a Manual Y-Cable or Splitter Protection Switch

Purpose	This task performs a Manual protection switch on a Y-cable or splitter protection group.
Tools/Equipment	None
Prerequisite Procedures	DLP-G46 Log into CTC, page 2-25
Required/As Needed	As needed
Onsite/Remote	Onsite or remote
Security Level	Maintenance or higher

Caution A Manual switch will move traffic from the active to the standby card only if network conditions permit it. If conditions change during the switch, CTC will attempt to place traffic back on the original active card.

Step 1 In node view, click the **Maintenance > Protection** tabs.

Step 2 In the Protection Groups list, click the Y-cable or splitter protection group where you want to apply the Manual protection switch.

Step 3 In the Selected Group area, click the active card or port.

Step 4 From Switch Commands, click **Manual**.

Step 5 In the Confirm Manual Operation dialog box, click **Yes**.

If conditions permit, the Manual switch will be applied. To clear the Manual switch, see the "DLP-G180 Clear a Manual or Force Y-Cable or Splitter Protection Switch" task on page 9-25.

Step 6 Return to your originating procedure (NTP).

DLP-G179 Apply a Force Y-Cable or Splitter Protection Switch

Purpose	This task performs a Force protection switch on a Y-cable or splitter protection group.
Tools/Equipment	None
Prerequisite Procedures	DLP-G46 Log into CTC, page 2-25
Required/As Needed	As needed
Onsite/Remote	Onsite or remote
Security Level	Maintenance or higher

Caution A Force switch will move traffic from the active to the standby card or port immediately, regardless of network conditions. The switch will remain in effect until it is cleared.

Step 1 In node view, click the **Maintenance > Protection** tabs.

Step 2 In the Protection Groups list, click the Y-cable or splitter protection group where you want to apply the Force protection switch.

Step 3 In the Selected Group area, click the active card or port.

Step 4 From Switch Commands, click **Force**.

Step 5 In the Confirm Manual Operation dialog box, click **Yes**.

The Manual switch will be applied. To clear the Force switch, see the "DLP-G180 Clear a Manual or Force Y-Cable or Splitter Protection Switch" task on page 9-25.

Step 6 Return to your originating procedure (NTP).

DLP-G180 Clear a Manual or Force Y-Cable or Splitter Protection Switch

Purpose	This task clears a Manual or Force protection switch on a Y-Cable or splitter protection group.
Tools/Equipment	None
Prerequisite Procedures	DLP-G46 Log into CTC, page 2-25 DLP-G178 Apply a Manual Y-Cable or Splitter Protection Switch, page 9-24 or DLP-G179 Apply a Force Y-Cable or Splitter Protection Switch, page 9-24
Required/As Needed	As needed
Onsite/Remote	Both
Security Level	Maintenance or higher

Step 1 In node view, click the **Maintenance > Protection** tabs.

Step 2 In the Protection Groups area, click the protection group that contains the card you want to clear.

Step 3 In the Selected Group area, click the card you want to clear.

Step 4 From Switch Commands, click **Clear**.

Step 5 Click **Yes** in the confirmation dialog box.

The Manual or Force protection switch is cleared.

Step 6 Return to your originating procedure (NTP).

DLP-G181 Apply a Lock On

Purpose	This task prevents traffic from being switched from the working/active card in a Y-cable protection group or port in a splitter protection group.
Tools/Equipment	None
Prerequisite Procedures	DLP-G46 Log into CTC, page 2-25
Required/As Needed	As needed
Onsite/Remote	Onsite or remote
Security Level	Maintenance or higher

Note You can apply the Lock On command only to the working/active card or port. If the working card or port is standby (traffic is switched), the Lock Out button is greyed.

Step 1 In node view, click the **Maintenance > Protection** tabs.

Step 2 In the Protection Groups area, click the protection group that contains the card (Y-cable) or port (Splitter) you want to lock on.

Step 3 In the Selected Group area, click the working/active card.

Step 4 From Inhibit Switching, click **Lock On**.

Step 5 Click **Yes** in the confirmation dialog box.

The lock on has been applied. Traffic cannot switch to the protect card. To clear the lock on, see the "DLP-G183 Clear a Lock On or Lock Out" task on page 9-27.

Note Provisioning a lock on raises a LOCKON-REQ or an FE-LOCKON condition on CTC. Clearing the lockout switch request clears these conditions.

Step 6 Return to your originating procedure (NTP).

DLP-G182 Apply a Lock Out

Purpose	This task keeps traffic from switching to the protect/standby card or port. The Lock Out command overrides the Force and Manual switching commands.
Tools/Equipment	None
Prerequisite Procedures	DLP-G46 Log into CTC, page 2-25
Required/As Needed	As needed
Onsite/Remote	Onsite or remote
Security Level	Maintenance or higher

Note You can apply the Lock Out to the protect/standby card or port. If the protect card or port is active (traffic is switched), the Lock Out task cannot be performed.

Step 1 In node view, click the **Maintenance > Protection** tabs.

Step 2 In the Protection Groups area, click the protection group that contains the card (Y-cable) or port (Splitter) you want to lock out.

Step 3 In the Selected Group area, click the protect/standby card.

Step 4 From Inhibit Switching, click **Lock Out**.

Step 5 Click **Yes** in the confirmation dialog box.

The lock out has been applied. Traffic cannot switch to the protect card. To clear the lock out, see the "DLP-G183 Clear a Lock On or Lock Out" task on page 9-27.

Note Provisioning a lock out raises a LOCKOUT-REQ or an FE-LOCKOUT condition on CTC. Clearing the lockout switch request clears these conditions.

Step 6 Return to your originating procedure (NTP).

DLP-G183 Clear a Lock On or Lock Out

Purpose	This task clears a lock on or lock out.
Tools/Equipment	None
Prerequisite Procedures	DLP-G46 Log into CTC, page 2-25 DLP-G181 Apply a Lock On, page 9-26 or DLP-G182 Apply a Lock Out, page 9-26
Required/As Needed	As needed
Onsite/Remote	Both
Security Level	Maintenance or higher

Step 1 In node view, click the **Maintenance > Protection** tabs.

Step 2 In the Protection Groups area, click the protection group that contains the card you want to clear.

Step 3 In the Selected Group area, click the card you want to clear.

Step 4 From Inhibit Switching, click **Unlock**.

Step 5 Click **Yes** in the confirmation dialog box.

The Lock On or Lock Out is cleared.

Step 6 Return to your originating procedure (NTP).

NTP-G85 Modify or Delete Communications Channel Terminations and Provisionable Patchcords

Purpose	This procedure modifies and deletes GCC and OSC terminations, as well as deletes provisionable patchcords on the ONS 15454.
Tools/Equipment	None
Prerequisite Procedures	DLP-G76 Provision GCC Terminations, page 3-62 or DLP-G75 Create OSC Terminations, page 3-61
Required/As Needed	As needed
Onsite/Remote	Onsite or remote
Security Level	Provisioning or higher

Caution Deleting a OSC termination can cause you to lose visibility of nodes that do not have other OSCs or network connections to the CTC computer.

Step 1 Complete the "DLP-G46 Log into CTC" task on page 2-25. If you are already logged in, continue with Step 2.

Step 2 In node view, complete the following tasks as needed:

- To modify a GCC termination, complete the "DLP-G184 Change a GCC Termination" task on page 9-28.
- To delete a GCC termination, complete the "DLP-G185 Delete a GCC Termination" task on page 9-29.
- To delete an OSC termination, complete the "DLP-G186 Delete an OSC Termination" task on page 9-30.
- To delete a provisioning patchcord, complete the "DLP-G187 Delete a Provisionable Patchcord" task on page 9-30.

Stop. You have completed this procedure.

DLP-G184 Change a GCC Termination

Purpose	This task modifies a GCC termination. You can enable or disable OSPF and enable or disable the foreign node setting.
Tools/Equipment	None
Prerequisite Procedures	DLP-G46 Log into CTC, page 2-25
Required/As Needed	As needed
Onsite/Remote	Remote
Security Level	Provisioning or higher

Step 1 Click the **Provisioning > Comm Channels > GCC** tabs.

Step 2 Click the GCC that you want to change.

Step 3 Click **Edit**.

Step 4 In the GCC Termination Editor dialog box, complete the following as necessary:

- GCC Rate—(Display only.) Indicates the GCC rate.
- Disable OSPF on SDCC Link—If checked, Open Shortest Path First is disabled on the link. OSPF should be disabled only when the slot and port connect to third-party equipment that does not support OSPF.
- Far End is Foreign—Check this box to specify that the GCC termination is a non-ONS node.
- Far end IP—If you checked the Far End is Foreign check box, type the IP address of the far-end node or leave the 0.0.0.0 default. An IP address of 0.0.0.0 means that any address can be used by the far end.

Step 5 Click **OK**.

Step 6 Return to your origination procedure (NTP).

DLP-G185 Delete a GCC Termination

Purpose	This task deletes the DWDM GCC terminations required for network setup when using the TXP_MR_10G, TXP_MR_2.5G, TXPP_MR_2.5G, and MXP_2.5G_10G cards.
Tools/Equipment	None
Prerequisite Procedures	DLP-G46 Log into CTC, page 2-25
Required/As Needed	As needed
Onsite/Remote	Onsite or remote
Security Level	Provisioning or higher

Step 1 Click the **Provisioning > Comm Channel > GCC** tabs.

Step 2 In the GCC Terminations pane, click **Delete.**

Step 3 In the Delete GCC Terminations dialog box, check **Set port OOS** check box if you want to place ports out of service.

Step 4 Click **Yes**. GCC-EOC alarms appear until all network GCC terminations are deleted and the ports are out of service.

Step 5 Return to your originating procedure (NTP).

DLP-G186 Delete an OSC Termination

Purpose	This task deletes an OSC termination on the ONS 15454.
Tools/Equipment	None
Prerequisite Procedures	DLP-G46 Log into CTC, page 2-25
Required/As Needed	As needed
Onsite/Remote	Onsite or remote
Security Level	Provisioning or higher

Caution Deleting a OSC termination might cause node isolation and loss of visibility to nodes that do not have other OSCs or network connections to the CTC computer.

Step 1 Click the **OSC** tab.

Step 2 Click the OSC termination you want to delete and click **Delete**.

Step 3 In the Delete OSC Termination confirmation box, click **Yes**. Confirm that the changes appear; if not, repeat the task.

Until all network OSC terminations are deleted, loss of signal (LOS) or power failure alarms on the Optical Booster (OPT-BST) amplifier, OSCM card, and OSC-CSM card might appear.

Step 4 Return to your originating procedure (NTP).

DLP-G187 Delete a Provisionable Patchcord

Purpose	This task deletes a provisionable patchcord.
Tools/Equipment	None
Prerequisite Procedures	DLP-G46 Log into CTC, page 2-25
Required/As Needed	As needed
Onsite/Remote	Onsite or remote
Security Level	Provisioning and higher

Note Deleting the GCC termination on a port also deletes the provisionable patchcord link on the port.

Step 1 In node view, click the **Provisioning > Comm Channels > Provisionable Patchcords** tabs. If you are in network view, click **Provisioning > Provisionable Patchcords** tabs.

Step 2 Click the provisionable patchcord that you want to delete.

Step 3 Click **Delete**.

Step 4 In the confirmation dialog box, click **Yes**.

Step 5 Return to your originating procedure (NTP).

NTP-G86 Convert a Pass-Through Connection to an Add/Drop Connection

Purpose	This procedure converts a pass-through connection into add/drop connections (one on the add side and the other on the drop side). Use this procedure during a network upgrade. Pass-through channel connections can be provided between channel input and output ports for the Channel OADM (AD-xC-xx.x), 4-Channel Multiplexer/Demultiplexer (4MD-xx.x), 32-Channel Multiplexer (32MUX-O), and 32-Channel Demultiplexer (32DMX-O and 32DMX) cards. You can set up pass-through connections in nodes that might require more add or drop channel capability or configuration.
Tools/Equipment	None
Prerequisite Procedures	DLP-G46 Log into CTC, page 2-25
Required/As Needed	As needed
Onsite/Remote	Onsite
Security Level	Provisioning or higher

Step 1 Complete the "DLP-G46 Log into CTC" task on page 2-25 at an ONS 15454 on the network.

Step 2 In node view, click the **Circuits** tab. Delete the unidirectional or bidirectional pass-through optical channel network connection (OCHNC) that applies to the pass-through connection to be removed.

Step 3 Remove the physical pass-through cabling. Click the **Provisioning > WDM-ANS > Connections** tabs to identify the card ports to be removed. The pass-through connection you are removing can be connected in both OADM and hub nodes.

- For a hub node—Connect the 32DMX-O or 32DMX output port to the 32MUX-O input port.
- For an OADM node—Connect the AD-xC-xx.x drop (TX) port to the AD-xC-xx.x add (RX) port.

Step 4 Physically connect the proper client interface to the correct add and drop ports.

Step 5 Delete the filter connections related to the pass-through connection that is being converted to an add/drop connection:

a. In node view, click the **Provisioning > WDM-ANS > Port Status** tabs.

b. Highlight the pass-through connections between ITU channel add and drop ports filters.

c. Click **Delete**.

Step 6 Create two new unidirectional OCHNCs (one heading east, the other heading west) to support the new add/drop channels. See the "DLP-G105 Provision DWDM Optical Channel Network Connections" task on page 6-9.

Step 7 As necessary, complete the "DLP-G99 Create a Provisionable Patchcord" task on page 5-12.

Step 8 As necessary, add an optical attenuator between the channel TX port of the OADM, 4MD-xx.x, or 32DMX-O card and the DWDM RX port on the TXP, MXP, or OC-N line card.

Note If the channel is coming from a 32DMX-O, the optical power can be adjusted in CTC by modifying the value of the internal per-channel VOA.

Step 9 (Optional) The following verification steps might be needed for an intermediate node when a pass-through connection is converted:

a. Verify that the received channels are at the specified power level. See the "NTP-G76 Verify Span Loss" procedure on page 9-2 for instructions.

b. Verify that the added channels are equalized with the express channels within +/– 1 dB.

c. If the channels are not equalized with the express channels within +/– 1 dB, check the attenuation of the VOAs.

d. Check all the fiber adapters to minimize their insertion losses. See the "NTP-G115 Clean Fiber Connectors" procedure on page 11-32 for instructions.

Stop. You have completed this procedure.

NTP-G87 Change Node Timing Parameters

Purpose	This procedure changes the timing parameters for the ONS 15454. To switch the timing reference, see the "NTP-G112 Change the Node Timing Reference" procedure on page 11-24.
Tools/Equipment	None
Prerequisite Procedures	NTP-G53 Set Up Timing, page 5-4
Required/As Needed	As needed
Onsite/Remote	Onsite or remote
Security Level	Provisioning or higher

Caution The following procedure might be service affecting and should be performed during a scheduled maintenance window.

Step 1 Complete the "DLP-G46 Log into CTC" task on page 2-25. If you are already logged in, continue with Step 2.

Step 2 Complete the "NTP-G103 Back Up the Database" procedure on page 11-2.

Step 3 Click the **Provisioning > Timing > General** tabs.

Step 4 In the General Timing section, change any of the following information:

- Timing Mode

  Note Because mixed timing can cause timing loops, Cisco does not recommend using the Mixed Timing option. Use this mode with care.

- SSM Message Set
- Quality of RES
- Revertive
- Revertive Time

See the "NTP-G53 Set Up Timing" task on page 5-4 for field descriptions.

Step 5 In the Reference Lists area, you can change the following information:

Note Reference lists define up to three timing references for the node and up to six BITS Out references. BITS Out references define the timing references used by equipment that can be attached to the node's BITS Out pins on the backplane. If you attach equipment to BITS Out pins, you normally attach it to a node with Line mode because equipment near the external timing reference can be directly wired to the reference.

- NE Reference
- BITS 1 Out
- BITS 2 Out

Step 6 Click the **Provisioning > Timing > General** tabs.

Step 7 In the BITS In section, you can change the following information:

Note The BITS Facilities section sets the parameters for your BITS1 and BITS2 timing references. Many of these settings are determined by the timing source manufacturer. If equipment is timed through BITS Out, you can set timing parameters to meet the requirements of the equipment.

- BITS In State
- Coding
- State
- Framing
- Sync Messaging
- Admin SSM

Step 8 In the BITS In section, you can change the following information:

- BITS Out State
- Coding
- Framing
- AIS Threshold
- LBO

Step 9 Click **Apply**. Confirm that the changes appear; if not, repeat the task.

Caution Internal timing is Stratum 3 and not intended for permanent use. All ONS 15454s should be timed to a Stratum 2 or better primary reference source.

Step 10 Complete the "NTP-G103 Back Up the Database" procedure on page 11-2.

Stop. You have completed this procedure.

NTP-G88 Modify Users and Change Security

Purpose	This procedure modifies user and security properties for the ONS 15454.
Tools/Equipment	None
Prerequisite Procedures	NTP-G23 Create Users and Assign Security, page 3-3
Required/As Needed	As needed
Onsite/Remote	Onsite or remote
Security Level	Superuser

Step 1 Complete the "DLP-G46 Log into CTC" task on page 2-25. If you are already logged in, continue with Step 2.

Step 2 Complete the "NTP-G103 Back Up the Database" procedure on page 11-2.

Step 3 Perform any of the following tasks as needed:

- DLP-G188 Change Security Policy—Single Node, page 9-34
- DLP-G189 Change Security Policy—Multiple Nodes, page 9-36
- DLP-G190 Change Node Access and PM Clearing Privilege, page 9-37
- DLP-G191 Change User Password and Security Level—Single Node, page 9-38
- DLP-G192 Change User Password and Security Level—Multiple Nodes, page 9-38
- DLP-G193 Delete User—Single Node, page 9-39
- DLP-G194 Delete User—Multiple Nodes, page 9-40
- DLP-G195 Log Out a User—Single Node, page 9-40
- DLP-G196 Log Out a User—Multiple Nodes, page 9-41

Step 4 Complete the "NTP-G103 Back Up the Database" procedure on page 11-2.

Stop. You have completed this procedure.

DLP-G188 Change Security Policy—Single Node

Purpose	This task changes the security policy for a single node, including idle user timeouts, user lockouts, password changes, and concurrent login policies.
Tools/Equipment	None
Prerequisite Procedures	DLP-G46 Log into CTC, page 2-25
Required/As Needed	As needed
Onsite/Remote	Onsite or remote
Security Level	Superuser

Step 1 In node view, click the **Provisioning** > **Security** > **Policy** tabs.

Step 2 If you want to modify the idle user timeout period, click the hour (H) and minute (M) arrows in the Idle User Timeout area for the security level you want to provision: RETRIEVE, MAINTENANCE, PROVISIONING, or SUPERUSER. The idle period time range is 0 and 16 hours, and 0 and 59 minutes. The user is logged out after the idle user timeout period is reached.

Step 3 In the User Lockout area, you can modify the following:

- Failed Logins Before Lockout—The number of failed login attempts a user can make before the user is locked out from the node. You can choose a value between 0 and 10.
- Manual Unlock by Superuser—Allows a user with Superuser privileges to manually unlock a user who has been locked out from a node.
- Lockout Duration—Sets the amount of time the user will be locked out after a failed login. You can choose a value between 0 and 10 minutes, and 0 and 55 seconds (in five-second intervals).

Step 4 In the Password Change area, you can modify the following:

- Prevent Reusing Last [ ] Passwords—Choose a value between 1 and 10 to set the number of different passwords the user must create before they can reuse a password.
- Cannot Change New Password for [ ] days—If checked, prevents users from changing their password for the specified period. The range is 20 to 95 days.
- Require Password Change on First Login to New Account—If checked, requires users to change their password the first time they log into their account.

Step 5 To require users to change their password at periodic intervals, check the Enforce Password Aging check box in the Password Aging area. If checked, provision the following parameters:

- Aging Period—Sets the amount of time that must pass before the user must change their password for each security level: RETRIEVE, MAINTENANCE, PROVISIONING, and SUPERUSER. The range is 20 to 95 days.
- Warning—Sets the number days the user will be warned to change his or her password for each security level. The range is 2 to 20 days.

Step 6 In the Other area, you can provision the following:

- Single Session Per User—If checked, limits users to one login session at one time.
- Disable Inactive User—If checked, disables users who do not log into the node for the period of time specified in the Inactive Duration box. The Inactive Duration range is 45 to 90 days.

Step 7 Click **Apply**. Confirm that the changes appear; if not, repeat the task.

Step 8 Return to your originating procedure (NTP).

DLP-G189 Change Security Policy—Multiple Nodes

Purpose	This task changes the security policy for multiple nodes including idle user timeouts, user lockouts, password change, and concurrent login policies.
Tools/Equipment	None
Prerequisite Procedures	DLP-G46 Log into CTC, page 2-25
Required/As Needed	As needed
Onsite/Remote	Onsite or remote
Security Level	Superuser

Step 1 From the View menu, choose **Go to Network View**.

Step 2 Click the **Provisioning** > **Security** > **Policy** tabs. A read-only table of nodes and their policies appears.

Step 3 Click a node on the table that you want to modify, then click **Change**.

Step 4 If you want to modify the idle user timeout period, click the hour (H) and minute (M) arrows in the Idle User Timeout area for the security level you want to provision: RETRIEVE, MAINTENANCE, PROVISIONING, or SUPERUSER. The idle period time range is 0 and 16 hours, and 0 and 59 minutes. The user is logged out after the idle user timeout period is reached.

Step 5 In the User Lockout area, you can modify the following:

- Failed Logins Before Lockout—The number of failed login attempts a user can make before the user is locked out from the node. You can choose a value between 0 and 10.
- Manual Unlock by Superuser—Allows a user with Superuser privileges to manually unlock a user who has been locked out from a node.
- Lockout Duration—Sets the amount of time the user will be locked out after a failed login. You can choose a value between 0 and 10 minutes, and 0 and 55 seconds (in five-second intervals).

Step 6 In the Password Change area, you can modify the following:

- Prevent Reusing Last [ ] Passwords—Choose a value between 1 and 10 to set the number of different passwords the user must create before they can reuse a password.
- Cannot Change New Password for [ ] days—If checked, prevents users from changing their password for the specified period. The range is 20 to 95 days.
- Require Password Change on First Login to New Account—If checked, requires users to change their password the first time they log into their account.

Step 7 To require users to change their password at periodic intervals, check the Enforce Password Aging check box in the Password Aging area. If checked, provision the following parameters:

- Aging Period—Sets the amount of time that must pass before the user must change his or her password for each security level: RETRIEVE, MAINTENANCE, PROVISIONING, and SUPERUSER. The range is 20 to 95 days.
- Warning—Sets the number days the user will be warned to change their password for each security level. The range is 2 to 20 days.

Step 8 In the Other area, you can provision the following:

- Single Session Per User—If checked, limits users to one login session at one time.
- Disable Inactive User—If checked, disables users who do not log into the node for the period of time specified in the Inactive Duration box. The Inactive Duration range is 45 to 90 days.

Step 9 In the Select Applicable Nodes area, uncheck any nodes where you do not want to apply the changes.

Step 10 Click **OK**.

Step 11 In the Security Policy Change Results dialog box, confirm that the changes are correct, then click **OK**.

Step 12 Return to your originating procedure (NTP).

DLP-G190 Change Node Access and PM Clearing Privilege

Purpose	This task provisions the physical access points and shell programs used to connect to the ONS 15454 and sets the user security level that can clear node performance monitoring (PM) data.
Tools/Equipment	None
Prerequisite Procedures	DLP-G46 Log into CTC, page 2-25
Required/As Needed	As needed
Onsite/Remote	Onsite or remote
Security Level	Superuser

Step 1 In node view, click the **Provisioning** > **Security** > **Access** tabs.

Step 2 In the Access area, provision the following:

- LAN access—Sets the access paths to the node:
  - No LAN Access—Allows access to the node only through DCC connections. Access through the TCC2 RJ-45 port and backplane is not permitted.
  - Backplane only—Allows access through DCC connections and the backplane. Access through the TCC2 RJ-45 port is not allowed.
  - Front and Backplane—Allows access through DCC, TCC2 RJ-45, and backplane connections.
- Restore Timeout—Sets a time delay for the enabling of front and backplane access when DCC connections are lost and “DCC only” is chosen in LAN Access. Front and backplane access is enabled after the restore timeout period has passed. Front and backplane access is disabled as soon as DCC connections are restored.

Step 3 In the Shell Access area, set the shell program used to access the node:

- Telnet—If chosen, allows access to the node using Telnet. Telnet is the terminal-remote host Internet protocol developed for the Advanced Agency Research Project Network (ARPANET). If chosen, choose the Telnet port. Port 23 is the default.
- SSH—If chosen, allows access to the node using the Secure Shell (SSH) program. SSH is a terminal-remote host Internet protocol that uses encrypted links. If chosen, Port 22 is the default port. It cannot be changed.

Step 4 In the PM Clearing Privilege field, choose the minimum security level that can clear node PM data: RETRIEVE, PROVISIONING, MAINTENANCE, or SUPERUSER.

Step 5 Click **Apply**.

Step 6 Return to your originating procedure (NTP).

DLP-G191 Change User Password and Security Level—Single Node

Purpose	This task changes settings for an existing user at one node.
Tools/Equipment	None
Prerequisite Procedures	DLP-G46 Log into CTC, page 2-25
Required/As Needed	As needed
Onsite/Remote	Onsite or remote
Security Level	Superuser

Step 1 In node view, click the **Provisioning** > **Security** > **Users** tabs.

Step 2 Click the user whose settings you want to modify, then click **Change**.

Step 3 In the Change User dialog box, you can:

- Change a user password.
- Modify the user security level.
- Lock out the user.

See the "DLP-G54 Create a New User—Single Node" procedure on page 3-4 for field descriptions.

Step 4 Click **OK**.

Note User settings that you changed during this task will not appear until that user logs off and logs back in.

Step 5 Return to your originating procedure (NTP).

DLP-G192 Change User Password and Security Level—Multiple Nodes

Purpose	This task changes settings for an existing user at multiple nodes.
Tools/Equipment	None
Prerequisite Procedures	DLP-G46 Log into CTC, page 2-25
Required/As Needed	As needed
Onsite/Remote	Onsite or remote
Security Level	Superuser

Note You must add the same user name and password to each node the user will access.

Step 1 From the View menu, choose **Go to Network View**. Verify that you can access all the nodes where you want to add users.

Step 2 Click the **Provisioning** > **Security** > **Users** tabs. Highlight the user's name whose settings you want to change.

Step 3 Click **Change**. The Change User dialog box appears.

Step 4 In the Change User dialog box, you can:

- Change a user's password.
- Modify the user's security level.
- Lock out the user.

See the "DLP-G55 Create a New User—Multiple Nodes" task on page 3-4 for field descriptions.

Step 5 In the Select Applicable Nodes area, uncheck any nodes where you do not want to change the user's settings (all network nodes are selected by default).

Step 6 Click **OK**. A Change Results confirmation dialog box appears.

Step 7 Click **OK** to acknowledge the changes. Confirm that the changes appear; if not, repeat the task.

Step 8 Return to your originating procedure (NTP).

DLP-G193 Delete User—Single Node

Purpose	This task deletes an existing user from a single node.
Tools/Equipment	None
Prerequisite Procedures	DLP-G46 Log into CTC, page 2-25
Required/As Needed	As needed
Onsite/Remote	Onsite or remote
Security Level	Superuser

Note You cannot delete a user who is currently logged in. To log out a user, you can complete the "DLP-G195 Log Out a User—Single Node" task on page 9-40, or you can choose the "Logout before delete" option in the Delete User dialog box.

Note CTC will allow you to delete other Superusers if one Superuser remains. For example, you can delete the CISCO15 user if you have created another Superuser. Use this option with caution.

Step 1 In node view, click the **Provisioning** > **Security** > **Users** tabs.

Step 2 Choose the user you want to delete.

Step 3 Click **Delete**.

Step 4 In the Delete User dialog box, verify that the user name displayed is the one you want to delete. Click **Logout before delete** if the user is currently logged in. (You cannot delete users if they are logged in.)

Step 5 Click **OK**. Confirm that the changes appear; if not, repeat the task.

Step 6 Return to your originating procedure (NTP).

DLP-G194 Delete User—Multiple Nodes

Purpose	This task deletes an existing user from multiple nodes.
Tools/Equipment	None
Prerequisite Procedures	DLP-G46 Log into CTC, page 2-25
Required/As Needed	As needed
Onsite/Remote	Onsite or remote
Security Level	Superuser

Note You cannot delete a user who is currently logged in. To log out a user, you can complete the "DLP-G196 Log Out a User—Multiple Nodes" task on page 9-41, or you can choose the "Logout before delete" option in the Delete User dialog box.

Note CTC will allow you to delete other Superusers if one Superuser remains. For example, you can delete the CISCO15 user if you have created another Superuser. Use this option with caution.

Step 1 From the View menu, choose **Go to Network View**.

Step 2 Click the **Provisioning** > **Security** tabs. Highlight the name of the user you want to delete.

Step 3 Click **Delete**. The Delete User dialog box appears.

Step 4 In the Select Applicable Nodes area, uncheck any nodes where you do not want to delete this user.

Step 5 Click **OK**. A User Deletion Results confirmation dialog box appears.

Step 6 Click **OK** to acknowledge the changes. Confirm that the changes appear; if not, repeat the task.

Step 7 Return to your originating procedure (NTP).

DLP-G195 Log Out a User—Single Node

Purpose	This task logs out a user from a single node.
Tools/Equipment	None
Prerequisite Procedures	DLP-G46 Log into CTC, page 2-25
Required/As Needed	As needed
Onsite/Remote	Onsite or remote
Security Level	Superuser

Step 1 In node view, click the **Provisioning** > **Security** > **Active Logins** tabs.

Step 2 Choose the user that you want to log out and click **Logout**.

Step 3 In the Logout User dialog box, check **Lockout before Logout** if you want to lock the user out. This prevents the user from logging in after logout based on parameters provided in the user lockouts in the Policy tab. A manual unlock by a Superuser is required, or the user is locked out for the amount of time specified in the Lockout Duration field. See the "DLP-G188 Change Security Policy—Single Node" task on page 9-34 for more information.

Step 4 Click **OK**.

Step 5 Click **Yes** to confirm the logout.

Step 6 Return to your originating procedure (NTP).

DLP-G196 Log Out a User—Multiple Nodes

Purpose	This task logs out a user from multiple nodes.
Tools/Equipment	None
Prerequisite Procedures	DLP-G46 Log into CTC, page 2-25
Required/As Needed	As needed
Onsite/Remote	Onsite or remote
Security Level	Superuser

Step 1 From the View menu, chose **Go to Network View**.

Step 2 Click the **Provisioning** > **Security** > **Active Logins** tabs.

Step 3 Choose the user you want to log out.

Step 4 Click **Logout**.

Step 5 In the Logout User dialog box, check the nodes where you want to log out the user.

Step 6 Check **Lockout before Logout** if you want to lock the user out prior to logout. This prevents the user from logging in after logout based on user lockout parameters provisioned in the Policy tab. A manual unlock by a Superuser is required, or the user is locked out for the amount of time specified in the Lockout Duration field. See the "DLP-G189 Change Security Policy—Multiple Nodes" task on page 9-36 for more information.

Step 7 In the Select Applicable Nodes area, uncheck any nodes where you do not want to change the user's settings (all network nodes are selected by default).

Step 8 Click **OK**.

Step 9 Return to your originating procedure (NTP).

NTP-G89 Change SNMP Settings

Purpose	This procedure modifies Simple Network Management Protocol (SNMP) settings for the ONS 15454.
Tools/Equipment	None
Prerequisite Procedures	NTP-G28 Set Up SNMP, page 3-22
Required/As Needed	As needed
Onsite/Remote	Onsite or remote
Security Level	Provisioning or higher

Step 1 Complete the "DLP-G46 Log into CTC" task on page 2-25. If you are already logged in, continue with Step 2.

Step 2 Complete the "NTP-G103 Back Up the Database" procedure on page 11-2.

Step 3 Perform any of the following tasks as needed:

- DLP-G197 Modify SNMP Trap Destinations, page 9-42
- DLP-G198 Delete SNMP Trap Destinations, page 9-43

Step 4 Complete the "NTP-G103 Back Up the Database" procedure on page 11-2.

Stop. You have completed this procedure.

DLP-G197 Modify SNMP Trap Destinations

Purpose	This task modifies the SNMP trap destinations on an ONS 15454 including community name, default User Datagram Protocol (UDP) port, SNMP trap version, and maximum traps per second.
Tools/Equipment	None
Prerequisite Procedures	DLP-G46 Log into CTC, page 2-25
Required/As Needed	As needed
Onsite/Remote	Onsite or remote
Security Level	Provisioning or higher

Step 1 In node view, click the **Provisioning** > **SNMP** tabs.

Step 2 Select a trap from the **Trap Destinations** area.

For a description of SNMP traps, refer to the *Cisco ONS 15454 SONET and DWDM Troubleshooting Guide*.

Step 3 Highlight the Destination row field entry under the Community column and change the entry to another valid community name.

Note The community name is a form of authentication and access control. The community name assigned to the ONS 15454 is case-sensitive and must match the community name of the network management system.

Note The default UDP port for SNMP is 162.

Step 4 Set the Trap Version field for either SNMPv1 or SNMPv2.

Refer to your network management system (NMS) documentation to determine whether to use SNMPv1 or SNMPv2.

Step 5 If you want the SNMP agent to accept SNMP SET requests on certain MIBs, click the **Allow SNMP Sets** check box. If this box is not checked, SET requests are rejected.

Step 6 If you want to set up the SNMP proxy feature to allow network management, message reporting, and performance statistics retrieval across ONS firewalls, click the **Enable SNMP Proxy** check box located on the SNMP tab.

Step 7 Click **Apply**.

Step 8 SNMP settings are now modified. To view SNMP information for each node, highlight the node IP address in the Trap Destinations area of the Trap Destinations area. Confirm that the changes appear; if not, repeat the task.

Step 9 Return to your originating procedure (NTP).

DLP-G198 Delete SNMP Trap Destinations

Purpose	This task deletes SNMP trap destinations on an ONS 15454.
Tools/Equipment	None
Prerequisite Procedures	DLP-G46 Log into CTC, page 2-25
Required/As Needed	As needed
Onsite/Remote	Onsite or remote
Security Level	Provisioning or higher

Step 1 In node view, click the **Provisioning** > **SNMP** tabs.

Step 2 In the Trap Destinations area, click the trap you want to delete.

Step 3 Click **Delete**. A confirmation dialog box appears.

Step 4 Click **Yes**. Confirm that the changes appear; if not, repeat the task.

Step 5 Return to your originating procedure (NTP).

Change Card Settings

This chapter explains how to change line, performance monitoring (PM), and threshold settings on Cisco ONS 15454 cards.

Note Unless otherwise specified, "ONS 15454" refers to both ANSI and ETSI shelf assemblies.

Before You Begin

Before performing any of the following procedures, investigate all alarms and clear any trouble conditions. Refer to the *Cisco ONS 15454 SONET and DWDM Troubleshooting Guide* as necessary.

Caution Changing card settings can be service affecting. You should make all changes during a scheduled maintenance window.

This section lists the chapter procedures (NTPs). Turn to a procedure for applicable tasks (DLPs).

1. NTP-G90 Modify Line Settings and PM Parameter Thresholds for Optical Service Channel Cards, page 10-2—As needed, complete this procedure to change the optical service channel (OSC) card settings.
2. NTP-G91 Modify Line Settings and PM Parameter Thresholds for Amplifier Cards, page 10-10—As needed, complete this procedure to change the amplifier card settings.
3. NTP-G92 Modify Line Settings and PM Parameter Thresholds for Multiplexer and Demultiplexer Cards, page 10-16—As needed, complete this procedure to change the multiplexer and demultiplexer card settings.
4. NTP-G93 Modify Line Settings and PM Parameter Thresholds for 32WSS Cards, page 10-22—As needed, complete this procedure to change the 32WSS card settings.
5. NTP-G94 Provision Pluggable Port Modules, page 10-29—As needed, complete this procedure to provision pluggable port modules (PPMs) for transponder (TXP) and muxponder (MXP) cards.
6. NTP-G95 Delete Pluggable Port Modules, page 10-31—As needed, complete this procedure to delete PPMs for TXP and MXP cards.
7. NTP-G96 Modify Line Settings and PM Parameter Thresholds for TXP_MR_10G and TXP_MR_10E Cards, page 10-32—As needed, complete this procedure to change line and threshold settings for TXP_MR_10G and TXP_MR_10E transponder cards.

8. NTP-G97 Modify Line Settings and PM Parameter Thresholds for MXP_2.5G_10G and MXP_2.5G_10E Cards, page 10-43—As needed, complete this procedure to change line and threshold settings for MXP_2.5G_10G and MXP_2.5G_10E muxponder cards.
9. NTP-G98 Modify Line Settings and PM Parameter Thresholds for TXP_MR_2.5G and TXPP_MR_2.5G Cards, page 10-55—As needed, complete this procedure to change line and threshold settings for TXP_MR_2.5G and TXPP_MR_2.5G transponder cards.
10. NTP-G99 Modify Line Settings and PM Parameter Thresholds for MXP_MR_2.5G and MXPP_MR_2.5G Cards, page 10-65—As needed, complete this procedure to change line and threshold settings for MXP_MR_2.5G and MXPP_MR_2.5G muxponder cards.
11. NTP-G100 Modify Alarm Interface Controller Settings (ANSI Only), page 10-77—As needed, complete this procedure to change settings for external alarms, controls, and orderwire for the AIC card.
12. NTP-G101 Modify Alarm Interface Controller–International Settings, page 10-80—As needed, complete this procedure to change settings for external alarms, controls, and orderwire for the AIC-I card.
13. NTP-G102 Change Card Service State, page 10-83—As needed, complete this procedure to change card service state.

NTP-G90 Modify Line Settings and PM Parameter Thresholds for Optical Service Channel Cards

Purpose	This procedure changes the line and threshold settings for optical service channel cards (OSCM and OSC-CSM).
Tools/Equipment	None
Prerequisite Procedures	NTP-G30 Install the DWDM Cards, page 3-26
Required/As Needed	As needed
Onsite/Remote	Onsite or remote
Security Level	Provisioning or higher

Step 1 Complete the "DLP-G46 Log into CTC" task on page 2-25 at the node where you want to change the OSCM or OSC-CSM card settings. If you are already logged in, proceed to Step 2.

Step 2 Complete the "NTP-G103 Back Up the Database" procedure on page 11-2.

Step 3 Perform any of the following tasks as needed:

- DLP-G199 Change Optical Line Settings for OSCM and OSC-CSM Cards, page 10-3
- DLP-G200 Change Line Threshold Settings for OSCM and OSC-CSM Cards, page 10-5
- DLP-G201 Change Optical Line Parameters for OSCM and OSC-CSM Cards, page 10-6
- DLP-G202 Change Optical Channel Threshold Settings for OSCM and OSC-CSM Cards, page 10-8
- DLP-G203 Change Maintenance Settings for Automatic Laser Shutdown, page 10-9

Step 4 Complete the "NTP-G103 Back Up the Database" procedure on page 11-2.

Stop. You have completed this procedure.

DLP-G199 Change Optical Line Settings for OSCM and OSC-CSM Cards

Purpose	This task changes the OC-3 optical line settings for OSCM and OSC-CSM cards.
Tools/Equipment	None
Prerequisite Procedures	DLP-G46 Log into CTC, page 2-25
Required/As Needed	As needed
Onsite/Remote	Onsite or remote
Security Level	Provisioning or higher

Step 1 In node view, double-click the OSCM or OSC-CSM card where you want to change the OC-3 optical line settings.

Step 2 Click the **Provisioning > OC3 Line > OC3 Line** tabs.

Step 3 Modify any of the settings described in Table 10-1.

Table 10-1 OSCM and OSC-CSM Card OC-3 Optical Line Settings

Parameter	Description	Options
Port #	Displays the port number.	Display only
Port Name	Provides the ability to assign the specified port a name.	User-defined. Name can be up to 32 alphanumeric/ special characters. Blank by default. See the "DLP-G104 Assign a Name to a Port" task on page 6-8.
SF BER	Sets the signal fail bit error rate.	• 1E-3 • 1E-4 • 1E-5
SD BER	Sets the signal degrade bit error rate.	• 1E-5 • 1E-6 • 1E-7 • 1E-8 • 1E-9
Provides Synch	Display only. If checked, the card is provisioned as a network element timing reference.	• Checked • Unchecked
Enable Synch Messages	Enables synchronization status messages (S1 byte), which allow the node to choose the best timing source.	• Checked • Unchecked
Send Do Not Use	When checked, sends a DUS (do not use) message on the S1 byte.	• Checked • Unchecked
PJSTSMon #	Display only. Sets the STS that will be used for pointer justification. If set to 0, no STS is monitored. Only one STS can be monitored on each OC-N port.	• On • Off

Table 10-1 OSCM and OSC-CSM Card OC-3 Optical Line Settings (continued)

Parameter	Description	Options
Admin State	Sets the port service state unless network conditions prevent the change. For more information about administrative states, see Appendix C, "DWDM Enhanced State Model."	• IS (ANSI) or Unlocked (ETSI)—Puts the port in-service. The port service state changes to IS-NR (ANSI) or Unlocked-enabled (ETSI). • IS,AINS (ANSI) or Unlocked,automaticInService (ETSI)—Puts the port in automatic in-service. The port service state changes to OOS-AU,AINS (ANSI) or Unlocked-disabled,automaticInService (ETSI). • OOS,DSBLD (ANSI) or Locked,disabled (ETSI)—Removes the port from service and disables it. The port service state changes to OOS-MA,DSBLD (ANSI) or Locked-enabled,disabled (ETSI). • OOS,MT (ANSI) or Locked,maintenance (ETSI)—Removes the port from service for maintenance. The port service state changes to OOS-MA,MT (ANSI) or Locked-enabled,maintenance (ETSI).
Service State	Identifies the autonomously generated state that gives the overall condition of the port. Service states appear in the format: Primary State-Primary State Qualifier, Secondary State. For more information about service states, see Appendix C, "DWDM Enhanced State Model."	• IS-NR (In-Service and Normal [ANSI]) or Unlocked-enabled (ETSI)— The port is fully operational and performing as provisioned. • OOS-AU,AINS (Out-Of-Service and Autonomous, Automatic In-Service [ANSI]) or Unlocked-disabled,automaticInService (ETSI)— The port is out-of-service, but traffic is carried. Alarm reporting is suppressed. The ONS node monitors the ports for an error-free signal. After an error-free signal is detected, the port stays in the OOS-AU,AINS/Unlocked-disabled,automaticInService state for the duration of the soak period. After the soak period ends, the port service state changes to IS-NR/Unlocked-enabled. • OOS-MA,DSBLD (Out-of-Service and Management, Disabled [ANSI]) or Locked-enabled,disabled (ETSI)— The port is out-of-service and unable to carry traffic. • OOS-MA,MT (Out-of-Service and Management, Maintenance [ANSI]) or Locked-enabled,maintenance (ETSI)— The port is out-of-service for maintenance. Alarm reporting is suppressed, but traffic is carried and loopbacks are allowed.

Table 10-1 OSCM and OSC-CSM Card OC-3 Optical Line Settings (continued)

Parameter	Description	Options
AINS Soak	Sets the automatic in-service soak period.	• Duration of valid input signal, in hh.mm format, after which the card becomes in service (IS) automatically • 0 to 48 hours, 15-minute increments
Type	Defines the port as SONET or SDH. The Enable Sync Msg field and the Send Do Not Use field must be disabled before the port can be set to SDH.	• Sonet • SDH

Step 4 Click **Apply**.

Step 5 Return to your originating procedure (NTP).

DLP-G200 Change Line Threshold Settings for OSCM and OSC-CSM Cards

Purpose	This task changes the optical line threshold settings for OSCM and OSC-CSM cards.
Tools/Equipment	None
Prerequisite Procedures	DLP-G46 Log into CTC, page 2-25
Required/As Needed	As needed
Onsite/Remote	Onsite or remote
Security Level	Provisioning or higher

Step 1 In node view, double-click the OSCM or OSC-CSM card where you want to change the optical line threshold settings.

Step 2 Click the **Provisioning > OC3 Line > SONET Thresholds** tabs.

Step 3 Modify any of the settings described in Table 10-2.

Table 10-2 OSCM and OSC-CSM Cards Optical Line Threshold Settings

Parameter	Description	Options
Port	Displays the port number	Display only
CV	Coding violations	Numeric. Can be set for 15-minute or one-day intervals for Line or Section (Near and Far End). Select the bullet and click **Refresh**.
ES	Errored seconds	Numeric. Can be set for 15-minute or one-day intervals for Line or Section (Near and Far End). Select the bullet and click **Refresh**.
SES	Severely errored seconds	Numeric. Can be set for 15-minute or one-day intervals for Line or Section (Near and Far End). Select the bullet and click **Refresh**.

Table 10-2 OSCM and OSC-CSM Cards Optical Line Threshold Settings (continued)

Parameter	Description	Options
SEFS	(Section only.) Severely errored framing seconds	Numeric. Can be set for Far End, for 15-minute or one-day intervals for Section only. Select the bullet and click **Refresh**.
FC	Failure count	Numeric. Can be set for 15-minute or one-day intervals for Line or Section. Select the bullet and click **Refresh** or Path (Near and Far End).
UAS	Unavailable seconds	Numeric. Can be set for 15-minute or one-day intervals for Line or Section (Near and Far End). Select the bullet and click **Refresh**.

Step 4 Click **Apply**.

Step 5 Return to your originating procedure (NTP).

DLP-G201 Change Optical Line Parameters for OSCM and OSC-CSM Cards

Purpose	This task changes the optical line parameters for OSCM and OSC-CSM cards.
Tools/Equipment	None
Prerequisite Procedures	DLP-G46 Log into CTC, page 2-25
Required/As Needed	As needed
Onsite/Remote	Onsite or remote
Security Level	Provisioning or higher

Step 1 In node view, double-click the OSCM or OSC-CSM card where you want to change the optical line parameters.

Step 2 Click the **Provisioning > Optical Line > Parameters** tabs.

Step 3 Modify any of the settings described in Table 10-3.

Table 10-3 OSCM and OSC-CSM Card Optical Line Parameter Settings

Parameter	Description	Options
Port #	Displays the port number and TX or RX.	Read-only
Port Name	Provides the ability to assign the specified port a name.	User-defined. Name can be up to 32 alphanumeric/special characters. Blank by default. See the "DLP-G104 Assign a Name to a Port" task on page 6-8.
Admin State	Sets the port service state unless network conditions prevent the change. For more information about administrative states, see Appendix C, "DWDM Enhanced State Model."	• IS/Unlocked • IS,AINS/Unlocked,automaticInService • OOS,DSBLD/Locked,disabled • OOS,MT/Locked,maintenance

Table 10-3 OSCM and OSC-CSM Card Optical Line Parameter Settings (continued)

Parameter	Description	Options
Line Direction	Provides the ability to associate a card with the line direction. Use this field if you have two cards and must designate which one will carry the traffic flow from east to west. The second card will carry traffic from west to east.	• East to West • West to East
Service State	Identifies the autonomously generated state that gives the overall condition of the port. Service states appear in the format: Primary State-Primary State Qualifier, Secondary State. For more information about service states, see Appendix C, "DWDM Enhanced State Model."	• IS-NR/Unlocked-enabled • OOS-AU,AINS/Unlocked-disabled, automaticInService • OOS-MA,DSBLD/Locked-enabled,disabled • OOS-MA,MT/Locked-enabled,maintenance
Type	Identifies the type of port. Display only.	• Input Com • Output Com • Input Line • Output Line • Input OSC • Output OSC.
Power	Shows the current power level per port. Display only.	—
VOA Mode	Shows the current functional mode of the variable optical attenuator (VOA). Display only.	• Constant gain mode • Constant power mode • Not in use (N/A)
VOA Power Ref.	Shows the value of the optical output power going to a VOA when constant power mode is active. Automatic node setup (ANS) is the only function that can modify this value. Display only.	—
VOA Power Calib.	The user can modify the optical output power to the VOA if necessary. This feature is normally used when the system is configured as "access" in Provisioning > WDM-ANS.	Numeric
VOA Attenuation Ref.	Shows the attenuation value of the VOA when the VOA is set in constant attenuation mode. ANS and amplifier power control (APC) are the only functions that can modify this value. Display only.	—
VOA Attenuation Calib.	The user can modify the attenuation value of the VOA if necessary when the VOA mode is set for constant attenuation.	Numeric

Step 4 Click **Apply**.

Step 5 Return to your originating procedure (NTP).

DLP-G202 Change Optical Channel Threshold Settings for OSCM and OSC-CSM Cards

Purpose	This task changes the optical channel threshold settings for OSCM and OSC-CSM cards.
Tools/Equipment	None
Prerequisite Procedures	DLP-G46 Log into CTC, page 2-25
Required/As Needed	As needed
Onsite/Remote	Onsite or remote
Security Level	Provisioning or higher

Step 1 In node view, double-click the OSCM or OSC-CSM card where you want to change the optical channel threshold settings.

Step 2 Click the **Provisioning > Optical Line > Optics Thresholds** tabs.

Step 3 Modify any of the settings described in Table 10-4.

Table 10-4 OSCM and OSC-CSM Cards Optical Channel Thresholds Settings

Parameter	Description	Options
Port	Display only. Displays the port number.	—
Power Low (dBm)	Set the low power settings.	Numeric. Can be set for 15-minute or one-day intervals for Warning or Alarm. Select the bullet and click **Refresh**.
Power High (dBm)	Set the high power settings.	Numeric. Can be set for 15-minute or one-day intervals for Warning or Alarm. Select the bullet and click **Refresh**.

Step 4 Click **Apply**.

Step 5 Return to your originating procedure (NTP).

DLP-G203 Change Maintenance Settings for Automatic Laser Shutdown

Purpose	This task changes the maintenance settings for the automatic laser shutdown (ALS) feature on the OSC-CSM, OSCM, and OPT-BST amplifier cards.
Tools/Equipment	None
Prerequisite Procedures	DLP-G46 Log into CTC, page 2-25
Required/As Needed	As needed
Onsite/Remote	Onsite or remote
Security Level	Provisioning or higher

Step 1 In node view, double-click the OSC-CSM, OSCM, or OPT-BST amplifier where you want to change the ALS maintenance settings.

Step 2 Click the **Maintenance > ALS** tabs.

Step 3 Modify any of the settings described in Table 10-5.

Table 10-5 OSC-CSM, OSCM, or OPT-BST Amplifier Maintenance Settings

Parameter	Description	Options
OSRI	Optical safety remote interlock. Shuts down the optical output power. When set to On, the amplifier cannot be unknowingly turned on.	On and off
ALS Mode	Automatic laser shutdown. Provides the ability to automatically shut a potentially hazardous laser off.	• Disable • Auto Restart • Manual Restart • Manual Restart for Test
Recovery Pulse Duration	Displays the duration of the optical power pulse that begins when an amplifier restarts. Display only.	—
Recovery Pulse Interval	Displays the interval between optical power pulses. Display only.	—
Currently Shutdown	Displays the current status of the laser. Display only.	—
Request Laser Restart	If checked, allows you to restart the laser. Display only.	Checked or unchecked

Step 4 Click **Apply**.

Step 5 Return to your originating procedure (NTP).

NTP-G91 Modify Line Settings and PM Parameter Thresholds for Amplifier Cards

Purpose	This procedure changes the line and threshold settings for the OPT-PRE and OPT-BST amplifier cards.
Tools/Equipment	None
Prerequisite Procedures	NTP-G30 Install the DWDM Cards, page 3-26
Required/As Needed	As needed
Onsite/Remote	Onsite or remote
Security Level	Provisioning or higher

Step 1 Complete the "DLP-G46 Log into CTC" task on page 2-25 at the node where you want to change the OPT-PRE or OPT-BST amplifier card settings. If you are already logged in, proceed to Step 2.

Step 2 Complete the "NTP-G103 Back Up the Database" procedure on page 11-2.

Step 3 Perform any of the following tasks as needed:

- DLP-G204 Change Optical Line Settings for OPT-PRE and OPT-BST Amplifiers, page 10-10
- DLP-G205 Change Optical Line Threshold Settings for OPT-PRE and OPT-BST Amplifiers, page 10-12
- DLP-G206 Change Optical Amplifier Line Settings for OPT-PRE and OPT-BST Amplifiers, page 10-13
- DLP-G207 Change Optical Channel Threshold Settings for OPT-PRE and OPT-BST Amplifiers, page 10-15

Step 4 Complete the "NTP-G103 Back Up the Database" procedure on page 11-2.

Stop. You have completed this procedure.

DLP-G204 Change Optical Line Settings for OPT-PRE and OPT-BST Amplifiers

Purpose	This task changes the optical line settings for OPT-PRE and OPT-BST amplifier cards.
Tools/Equipment	None
Prerequisite Procedures	DLP-G46 Log into CTC, page 2-25
Required/As Needed	As needed
Onsite/Remote	Onsite or remote
Security Level	Provisioning or higher

Step 1 In node view, double-click the OPT-PRE or OPT-BST amplifier where you want to change the optical line settings.

Step 2 Click the **Provisioning > Optical Line > Parameters** tabs.

Step 3 Modify any of the settings described in Table 10-6.

Table 10-6 OPT-PRE and OPT-BST Amplifier Optical Line Settings

Parameter	Description	Options
Port #	Displays the port number. Display only.	Displays port number and TX or RX.
Port Name	Provides the ability to assign the specified port a name.	User-defined. Name can be up to 32 alphanumeric/special characters. Blank by default. See the "DLP-G104 Assign a Name to a Port" task on page 6-8.
Admin State	Sets the port service state unless network conditions prevent the change. For more information about administrative states, see Appendix C, "DWDM Enhanced State Model."	• IS/Unlocked • IS,AINS/Unlocked,automaticInService • OOS,DSBLD/Locked,disabled • OOS,MT/Locked,maintenance
Line Direction	Provides the ability to associate a card with the line direction. Use this field if you have two cards in the same shelf and must designate which one will carry the traffic flow from east to west. The second card will carry traffic from west to east.	• East to West • West to East
Service State	Identifies the autonomously generated state that gives the overall condition of the port. Service states appear in the format: Primary State-Primary State Qualifier, Secondary State. For more information about service states, see Appendix C, "DWDM Enhanced State Model."	• IS-NR/Unlocked-enabled • OOS-AU,AINS/Unlocked-disabled, automaticInService • OOS-MA,DSBLD/Locked-enabled,disabled • OOS-MA,MT/Locked-enabled,maintenance
Type	Identifies the type of port. Display only.	• Input Com • Output Com • Input Line • Output Line • Input OSC • Output OSC.
Power	Shows the current power level per port. Display only.	—

Step 4 Click **Apply**.

Step 5 Return to your originating procedure (NTP).

DLP-G205 Change Optical Line Threshold Settings for OPT-PRE and OPT-BST Amplifiers

Purpose	This task changes the optical line threshold settings for OPT-PRE and OPT-BST amplifier cards.
Tools/Equipment	None
Prerequisite Procedures	DLP-G46 Log into CTC, page 2-25
Required/As Needed	As needed
Onsite/Remote	Onsite or remote
Security Level	Provisioning or higher

Step 1 In node view, double-click the OPT-PRE or OPT-BST amplifier where you want to change the optical line threshold settings.

Step 2 Click the **Provisioning > Optical Line > Optics Thresholds** tabs.

Step 3 Modify any of the settings described in Table 10-7.

Table 10-7 OPT-PRE and OPT-BST Amplifiers Optical Line Thresholds Settings

Parameter	Description	Options
Port	Display only. Displays the port number.	—
Power Low (dBm)	Set the low power settings.	Numeric. Can be set for 15-minute or one-day intervals for Warning or Alarm. Select the bullet and click **Refresh**.
Power High (dBm)	Set the high power settings.	Numeric. Can be set for 15-minute or one-day intervals for Warning or Alarm. Select the bullet and click **Refresh**.

Step 4 Click **Apply**.

Step 5 Return to your originating procedure (NTP).

DLP-G206 Change Optical Amplifier Line Settings for OPT-PRE and OPT-BST Amplifiers

Purpose	This task changes the optical amplifier line settings for OPT-PRE and OPT-BST amplifier cards.
Tools/Equipment	None
Prerequisite Procedures	DLP-G46 Log into CTC, page 2-25
Required/As Needed	As needed
Onsite/Remote	Onsite or remote
Security Level	Provisioning or higher

Step 1 In node view, double-click the OPT-PRE or OPT-BST amplifier where you want to change the optical amplifier line settings.

Step 2 Click the **Provisioning > Opt. Ampli. Line > Parameters** tabs.

Step 3 Modify any of the settings described in Table 10-8.

Table 10-8 OPT-PRE and OPT-BST Optical Amplifier Line Settings

Parameter	Description	Options
Port #	Display only. Displays the port number.	Displays port number and TX or RX.
Port Name	Provides the ability to assign the specified port a name.	User-defined. Name can be up to 32 alphanumeric/special characters. Blank by default. See the "DLP-G104 Assign a Name to a Port" task on page 6-8.
Admin State	Sets the port service state unless network conditions prevent the change. For more information about administrative states, see Appendix C, "DWDM Enhanced State Model."	• IS/Unlocked • IS,AINS/Unlocked,automaticInService • OOS,DSBLD/Locked,disabled • OOS,MT/Locked,maintenance
Line Direction	Provides the ability to associate a card with the line direction. Use this field if you have two cards in the same shelf and must designate which one will carry the traffic flow from east to west. The second card will carry traffic from west to east.	• East to West • West to East
Service State	Identifies the autonomously generated state that gives the overall condition of the port. Service states appear in the format: Primary State-Primary State Qualifier, Secondary State. For more information about service states, see Appendix C, "DWDM Enhanced State Model."	• IS-NR/Unlocked-enabled • OOS-AU,AINS/Unlocked-disabled, automaticInService • OOS-MA,DSBLD/Locked-enabled,disabled • OOS-MA,MT/Locked-enabled,maintenance

Table 10-8 OPT-PRE and OPT-BST Optical Amplifier Line Settings (continued)

Parameter	Description	Options
Type	Identifies the type of port. Display only.	• Input Com • Output Com • Input Line • Output Line • Input OSC • Output OSC.
Power	Shows the current power level per port. Display only.	—
Power Ref.	Shows the optical power per channel leaving to the amplifier. Display only.	—
Power Calib.	The user can manually set the total optical power going to the amplifiers.	Numeric
Gain	The current gain of the amplifiers. Display only.	—
Gain Set Point	The value of the gain that the amplifier must achieve.	Display only or numeric depending on mode setting. When the system is configured as metro core, this field is Display only. When the system is configured as metro access this field can be changed by the user.
Tilt Reference	This field is set to zero. It represents the default value for the amplifier tilt. In a future software release this value will be managed by APC. Display only.	—
Tilt Calibration	The user can manually set the amplifier tilt.	Numeric
Mode	Shows the working mode of the amplifier. Display only.	Control gain Control power

Step 4 Click **Apply**.

Step 5 Return to your originating procedure (NTP).

DLP-G207 Change Optical Channel Threshold Settings for OPT-PRE and OPT-BST Amplifiers

Purpose	This task changes the optical channel threshold settings for OPT-PRE and OPT-BST amplifier cards.
Tools/Equipment	None
Prerequisite Procedures	DLP-G46 Log into CTC, page 2-25
Required/As Needed	As needed
Onsite/Remote	Onsite or remote
Security Level	Provisioning or higher

Step 1 In node view, double-click the OPT-PRE or OPT-BST amplifier where you want to change the optical channel threshold settings.

Step 2 Click the **Provisioning > Opt. Ampli. Line > Optics Thresholds** tabs.

Step 3 Modify any of the settings described in Table 10-9.

Table 10-9 OPT-PRE and OPT-BST Amplifier Optical Channel Threshold Settings

Parameter	Description	Options
Port	Display only. Displays the port number.	—
Power Low (dBm)	Set the low power settings.	Numeric. Can be set for 15-minute or one-day intervals for Warning or Alarm. Select the bullet and click **Refresh**.
Power High (dBm)	Set the high power settings.	Numeric. Can be set for 15-minute or one-day intervals for Warning or Alarm. Select the bullet and click **Refresh**.

Step 4 Click **Apply**.

Step 5 Return to your originating procedure (NTP).

NTP-G92 Modify Line Settings and PM Parameter Thresholds for Multiplexer and Demultiplexer Cards

Purpose	This procedure changes the line and PM parameter threshold settings for the multiplexer and demultiplexer cards. The cards included in this category are the 32MUX-O,32DMX-O,32DMX, and4MD-xx.x cards.
Tools/Equipment	None
Prerequisite Procedures	NTP-G30 Install the DWDM Cards, page 3-26
Required/As Needed	As needed
Onsite/Remote	Onsite or remote
Security Level	Provisioning or higher

Note Refer to the "Performance Monitoring" chapter in the *Cisco ONS 15454 SONET and DWDM Troubleshooting Guide* for more information on MUX and DMX parameters.

Step 1 Complete the "DLP-G46 Log into CTC" task on page 2-25 at the node where you want to change the 32MUX-O, 32DMX, or 4MD-xx.x card settings. If you are already logged in, proceed to Step 2.

Step 2 Complete the "NTP-G103 Back Up the Database" procedure on page 11-2.

Step 3 Perform any of the following tasks as needed:

- DLP-G208 Change Optical Line Settings for Multiplexer and Demultiplexer Cards, page 10-17
- DLP-G209 Change Optical Line Threshold Settings for Multiplexer and Demultiplexer Cards, page 10-18
- DLP-G210 Change Optical Channel Settings for Multiplexer and Demultiplexer Cards, page 10-19
- DLP-G211 Change Optical Channel Threshold Settings for Multiplexer and Demultiplexer Cards, page 10-21

Step 4 Complete the "NTP-G103 Back Up the Database" procedure on page 11-2.

Stop. You have completed this procedure.

DLP-G208 Change Optical Line Settings for Multiplexer and Demultiplexer Cards

Purpose	This task changes the optical line settings for 32MUX-O, 32DMX-O, 32DMX, and 4MD xx.x multiplexer and demultiplexer cards.
Tools/Equipment	None
Prerequisite Procedures	DLP-G46 Log into CTC, page 2-25
Required/As Needed	As needed
Onsite/Remote	Onsite or remote
Security Level	Provisioning or higher

Step 1 In node view, double-click the multiplexer or demultiplexer cards where you want to change the optical line settings.

Step 2 Click the **Provisioning > Optical Line > Parameters** tabs.

Step 3 Modify any of the settings described in Table 10-10.

Table 10-10 Multiplexer and Demultiplexer Card Optical Line Settings

Parameter	Description	Options
Port #	Displays the port number. Display only.	Displays port number and TX or RX.
Port Name	Provides the ability to assign the specified port a name.	User-defined. Name can be up to 32 alphanumeric/special characters. Blank by default. See the "DLP-G104 Assign a Name to a Port" task on page 6-8.
Admin State	Sets the port service state unless network conditions prevent the change. For more information about administrative states, see Appendix C, "DWDM Enhanced State Model."	• IS/Unlocked • IS,AINS/Unlocked,automaticInService • OOS,DSBLD/Locked,disabled • OOS,MT/Locked,maintenance
Line Direction	Provides the ability to associate a card with the line direction. Use this field if you have two cards in the same shelf and must designate which one will carry the traffic flow from east to west. The second card will carry traffic from west to east.	• East to West • West to East
Service State	Identifies the autonomously generated state that gives the overall condition of the port. Service states appear in the format: Primary State-Primary State Qualifier, Secondary State. For more information about service states, see Appendix C, "DWDM Enhanced State Model."	• IS-NR/Unlocked-enabled • OOS-AU,AINS/Unlocked-disabled, automaticInService • OOS-MA,DSBLD/Locked-enabled,disabled • OOS-MA,MT/Locked-enabled,maintenance

Table 10-10 Multiplexer and Demultiplexer Card Optical Line Settings (continued)

Parameter	Description	Options
Type	Identifies the type of port. Display only.	• Input Com • Output Com • Input Line • Output Line • Input OSC • Output OSC
Power	Display only. Shows the current power level per port.	—

Step 4 Click **Apply**.

Step 5 Return to your originating procedure (NTP).

DLP-G209 Change Optical Line Threshold Settings for Multiplexer and Demultiplexer Cards

Purpose	This task changes the optical line threshold settings for 32MUX-O, 32DMX-O, 32DMX, and 4MD-xx.x multiplexer and demultiplexer cards.
Tools/Equipment	None
Prerequisite Procedures	DLP-G46 Log into CTC, page 2-25
Required/As Needed	As needed
Onsite/Remote	Onsite or remote
Security Level	Provisioning or higher

Step 1 In node view, double-click the multiplexer or demultiplexer cards where you want to change the optical line threshold settings.

Step 2 Click the **Provisioning > Optical Line > Optics Thresholds** tabs.

Step 3 Modify any of the settings described in Table 10-11.

Table 10-11 Multiplexer and Demultiplexer Card Optical Line Thresholds Settings

Parameter	Description	Options
Port	Display only. Displays the port number.	—
Power Low (dBm)	Set the low power settings.	Numeric. Can be set for 15-minute or one-day intervals for Warning or Alarm. Select the bullet and click **Refresh**.
Power High (dBm)	Set the high power settings.	Numeric. Can be set for 15-minute or one-day intervals for Warning or Alarm. Select the bullet and click **Refresh**.

Step 4 Click **Apply**.

Step 5 Return to your originating procedure (NTP).

DLP-G210 Change Optical Channel Settings for Multiplexer and Demultiplexer Cards

Purpose	This task changes the optical channel settings for 32MUX-O, 32DMX-O, 32DMX, and 4MD-xx.x multiplexer and demultiplexer cards.
Tools/Equipment	None
Prerequisite Procedures	DLP-G46 Log into CTC, page 2-25
Required/As Needed	As needed
Onsite/Remote	Onsite or remote
Security Level	Provisioning or higher

Step 1 In node view, double-click the multiplexer or demultiplexer card where you want to change the optical channel settings.

Step 2 Click the **Provisioning > Optical Chn > Parameters** tabs.

Step 3 Modify any of the settings described in Table 10-12.

Table 10-12 Multiplexer and Demultiplexer Card Optical Channel Settings

Parameter	Description	Options
Port #	Display only. Displays the port number.	Displays port number and TX or RX.
Port Name	Provides the ability to assign the specified port a name.	User-defined. Name can be up to 32 alphanumeric/special characters. Blank by default. See the "DLP-G104 Assign a Name to a Port" task on page 6-8.
Admin State	Sets the port service state unless network conditions prevent the change. For more information about administrative states, see Appendix C, "DWDM Enhanced State Model."	• IS/Unlocked • IS,AINS/Unlocked,automaticInService • OOS,DSBLD/Locked,disabled • OOS,MT/Locked,maintenance
Line Direction	Provides the ability to associate a card with the line direction. Use this field if you have two cards in the same shelf and must designate which one will carry the traffic flow from east to west. The second card will carry traffic from west to east.	• East to West • West to East
Service State	Identifies the autonomously generated state that gives the overall condition of the port. Service states appear in the format: Primary State-Primary State Qualifier, Secondary State. For more information about service states, see Appendix C, "DWDM Enhanced State Model."	• IS-NR/Unlocked-enabled • OOS-AU,AINS/Unlocked-disabled, automaticInService • OOS-MA,DSBLD/Locked-enabled,disabled • OOS-MA,MT/Locked-enabled,maintenance

Table 10-12 Multiplexer and Demultiplexer Card Optical Channel Settings (continued)

Parameter	Description	Options
Type	Display only. Identifies the type of port.	• Input Com • Output Com • Input Line • Output Line • Input OSC • Output OSC.
Power	Display only. Shows the current power level per port.	—
VOA Mode	Display only. Shows the current functional mode of the VOA: constant power or constant attenuation.	—
VOA Power Ref.	Display only. Shows the value of the optical output power going to a VOA when constant power mode is active. Dmux shows the reference value of the desired optical power going to the client. ANS is the only function that can modify this value (using the Pdrop parameter on the Provisioning tab). Mux show the reference value of the desired per-channel optical power. ANS is the only function that can modify this value (using the Port Mux Stage parameter on the Provisioning tab).	—
VOA Power Calib.	The user can modify the optical output power to the VOA if necessary. The VOA power calibration offsets the VOA power reference. Dmux allows you to modify the optical output power to the client if necessary. Mux allows you to modify the output power per channel. This feature is normally used when the system is configured as “access” in Provisioning > WDM-ANS.	Numeric
VOA Attenuation Ref.	Display only. Shows the attenuation value of the VOA when the VOA is set in attenuation mode. ANS and APC are the only functions that can modify this value.	—
VOA Attenuation Calib.	Allows the user to modify the attenuation value of the VOA if necessary when the VOA mode is set for constant attenuation.	Numeric

Table 10-12 Multiplexer and Demultiplexer Card Optical Channel Settings (continued)

Parameter	Description	Options
Actual Wavelength	Display only. Shows the wavelength specified by the manufacturing data. This field cannot be set manually.	—
Expected Wavelength	Shows the preprovisioned wavelength. This field is used to preprovsion cards. For example, you can specify a generic AD-1C in Slot 15 and set the expected wavelength to 1552.52. The result is a AD-1C-52.5. If the actual equipment installed does not match the preprovisioned slot, a Mismatch Equipment Alarm (MEA) occurs.	Numeric

Step 4 Click **Apply**.

Step 5 Return to your originating procedure (NTP).

DLP-G211 Change Optical Channel Threshold Settings for Multiplexer and Demultiplexer Cards

Purpose	This task changes the optical channel threshold settings for 32MUX-O, 32DMX-O, 32DMX, and 4MD-xx.x multiplexer and demultiplexer cards.
Tools/Equipment	None
Prerequisite Procedures	DLP-G46 Log into CTC, page 2-25
Required/As Needed	As needed
Onsite/Remote	Onsite or remote
Security Level	Provisioning or higher

Step 1 In node view, double-click the multiplexer or demultiplexer cards where you want to change the optical threshold settings.

Step 2 Click the **Provisioning > Optical Chn > Optics Thresholds** tabs.

Step 3 Modify any of the settings described in Table 10-13.

Table 10-13 Multiplexer and Demultiplexer Cards Optical Channel Threshold Settings

Parameter	Description	Options
Port	Display only. Displays the port number.	—
Power Low (dBm)	Set the low power settings.	Numeric. Can be set for 15-minute or one-day intervals for Warning or Alarm. Select the bullet and click **Refresh**.
Power High (dBm)	Set the high power settings.	Numeric. Can be set for 15-minute or one-day intervals for Warning or Alarm. Select the bullet and click **Refresh**.

Step 4 Click **Apply**.

Step 5 Return to your originating procedure (NTP).

NTP-G93 Modify Line Settings and PM Parameter Thresholds for 32WSS Cards

Purpose	This procedure changes the line and threshold settings for the 32WSS card.
Tools/Equipment	None
Prerequisite Procedures	NTP-G30 Install the DWDM Cards, page 3-26
Required/As Needed	As needed
Onsite/Remote	Onsite or remote
Security Level	Provisioning or higher

Step 1 Complete the "DLP-G46 Log into CTC" task on page 2-25 at the node where you want to change the 32WSS card settings. If you are already logged in, proceed to Step 2.

Step 2 Complete the "NTP-G103 Back Up the Database" procedure on page 11-2.

Step 3 Perform any of the following tasks as needed:

- DLP-G212 Change Optical Channel Parameters for the 32WSS Card, page 10-23
- DLP-G213 Change Optical Channel Optics Thresholds for the 32WSS Card, page 10-25

Note To use the alarm profile tab, including creating alarm profiles and suppressing alarms, see Chapter 7, "Manage Alarms."

- DLP-G214 Change Optical Line Parameters for the 32WSS Card, page 10-26
- DLP-G215 Change Optical Line Optics Thresholds for the 32WSS Card, page 10-28

Step 4 Complete the "NTP-G103 Back Up the Database" procedure on page 11-2.

Stop. You have completed this procedure.

DLP-G212 Change Optical Channel Parameters for the 32WSS Card

Purpose	This task changes the optical channel parameter settings for the 32WSS card.
Tools/Equipment	None
Prerequisite Procedures	DLP-G46 Log into CTC, page 2-25
Required/As Needed	As needed
Onsite/Remote	Onsite or remote
Security Level	Provisioning or higher

Step 1 In node view, double-click the 32WSS card where you want to change the optical channel parameter settings.

Step 2 Click the **Provisioning > Optical Chn: Optical Connector** tab for one of the four optical channel: optical connector tabs (1 to 4) that are available.

Step 3 Modify any of the settings described in Table 10-14.

Table 10-14 32WSS Optical Channel Parameter Settings

Parameter	Description	Options
Port	Display only. Port designation information. Each Optical Channel has a unique receive (RX) and a pass-through (PT) port in this field. For example, with the first two ports of Optical Chn: Optical Connector 1 are designated as 1 CHAN-16-1-RX and 33 CHAN-16-1-PT. These ports are shown in the 32WSS display windows in top row of ADD RX ports as 01 and 33.	—
Port Name	The user can assign a logical name for each of the ports shown by filling in this field.	User-defined. Name can be up to 32 alphanumeric/special characters. Blank by default. • See the "DLP-G104 Assign a Name to a Port" task on page 6-8.
Admin State	Sets the port service state unless network conditions prevent the change. For more information about administrative states, see Appendix C, "DWDM Enhanced State Model."	• IS/Unlocked • IS,AINS/Unlocked,automaticInService • OOS,DSBLD/Locked,disabled • OOS,MT/Locked,maintenance
Service State	Identifies the autonomously generated state that gives the overall condition of the port. Service states appear in the format: Primary State-Primary State Qualifier, Secondary State. For more information about service states, see Appendix C, "DWDM Enhanced State Model."	• IS-NR/Unlocked-enabled • OOS-AU,AINS/Unlocked-disabled,automaticInService • OOS-MA,DSBLD/Locked-enabled,disabled • OOS-MA,MT/Locked-enabled,maintenance

Table 10-14 32WSS Optical Channel Parameter Settings (continued)

Parameter	Description	Options
Line Direction	Display only. Displays the direction that the optical signal flows.	• West to East (the direction in which channels are added) • East to West (the direction in which channels are dropped)
Type	Port type	• Add • Passthrough
Power	Power value read by the photodiode after the VOA.	• Numeric value (dB)
VOA Mode	Displays VOA power mode.	• Constant Power
VOA Power Reference	Display only. Displays VOA power reference.	• Numeric value (dB)
VOA Power Calibration	Displays VOA power calibration.	• Numeric value (dB) • –37 dB to –2 dB
VOA Attenuation Reference	Display only. Displays VOA attenuation reference.	• Numeric value (dB)
VOA Attenuation Calibration	Displays VOA attenuation calibration.	• Numeric value (dB) • –30 dB to +30 dB
Actual Wavelength	Display only. Displays the actual wavelength utilized by the channel.	• Actual measured value (nm) • UNKNOWN
Expected Wavelength	Display only. Displays the expected wavelength assigned for the channel.	• Value (nm) from the ITU-T grid specification • UNKNOWN
Power ADD	Display only. Displays Power Add, which is the value read by the photodiode before the VOA. Applicable only for ADD channels.	• Numeric value (dB)
Path Value	Display only. Displays Path value.	• Standby
AINS Soak	Display only. Sets the automatic in-service soak period.	• Duration of valid input signal, in hh.mm format, after which the card becomes in service (IS) automatically • 0 to 48 hours, 15-minute increments

Step 4 Click **Apply**.

Step 5 Return to your originating procedure (NTP).

DLP-G213 Change Optical Channel Optics Thresholds for the 32WSS Card

Purpose	This task changes the optical channel optics threshold settings for the 32WSS card.
Tools/Equipment	None
Prerequisite Procedures	DLP-G46 Log into CTC, page 2-25
Required/As Needed	As needed
Onsite/Remote	Onsite or remote
Security Level	Provisioning or higher

Step 1 In node view, double-click the 32WSS card where you want to change the optical channel optics threshold settings.

Step 2 Click the **Provisioning > Optical Chn: Optical Connector** tab for one of the four optical channel: optical connector tabs (1 to 4) that are available.

Step 3 Click the **Optics Thresholds** tab to display the warnings thresholds settings for each port.

Step 4 Modify any of the settings described in Table 10-15.

Table 10-15 32WSS Card Optical Channel Optics Threshold Settings

Parameter	Description	Options
Port	Display only. Port designation information. Each Optical Channel has a unique RX and a PT port in this field. For example, the first two ports of Optical Ch: Optical Connector 1 are designated as 1 CHAN-16-1-RX and 33 CHAN-16-1-PT. These two corresponding ports are shown in the 32WSS display windows in the top row as ADD RX Port 01 and PT Port 33.	—
opwrMin (dBm)	Sets the warning thresholds minimum value (dBm).	User-defined value. Typically a negative optical power setting.
opwrMin (dBm)	Sets the warning thresholds maximum value (dBm).	User-defined value. Typically a positive optical power setting.

Step 5 Select the threshold alert type by clicking either the **Warning** or the **Alarm** radio button.

Step 6 Select the warning threshold interval by selecting either the **15 Min** or **1 Day** radio button.

Step 7 Click the **Refresh** button.

Step 8 Return to your originating procedure (NTP).

DLP-G214 Change Optical Line Parameters for the 32WSS Card

Purpose	This task changes the optical line parameter settings for the 32WSS card.
Tools/Equipment	None
Prerequisite Procedures	DLP-G46 Log into CTC, page 2-25
Required/As Needed	As needed
Onsite/Remote	Onsite or remote
Security Level	Provisioning or higher

Step 1 In node view, double-click the 32WSS card where you want to change the optical line parameter settings.

Step 2 Click the **Provisioning > Optical Line > Parameters** tab.

Step 3 Modify any of the settings described in Table 10-16.

Table 10-16 32WSS Optical Line Parameter Settings

Parameter	Description	Options
Port	Display only. Line designation information is read-only. The EXP-RX port receives an optical signal from another 32WSS module in the same network element. The EXP-TX port sends an optical signal to the other 32WSS module within the network element. For example, the two EXP ports are designated as 66 LINE-16-1-RX and 65 LINE-16-1-TX. The COM-TX port sends an aggregate optical signal to a booster card (for example, OSC-CSM or OSCM) for transmission outside of the network element. The COM-RX port receives the optical signal from a preamplifier and sends it to the optical splitter. For example, the two COM ports are designated as 67 LINE-16-2-TX and 68 LINE-16-2-RX. The DROP-TX port sends the split-off optical signal that contains drop channels to the 32DMX card, where the channels are further processed and dropped. For example, the DROP-TX port is designated as 69 LINE-16-3-TX.	—
Port Name	The user can assign a logical name for each of the ports shown by filling in this field.	User-defined. Name can be up to 32 alphanumeric/special characters. Blank by default. See the "DLP-G104 Assign a Name to a Port" task on page 6-8.

Table 10-16 32WSS Optical Line Parameter Settings (continued)

Parameter	Description	Options
Admin State	Sets the port service state unless network conditions prevent the change. For more information about administrative states, see Appendix C, "DWDM Enhanced State Model."	• IS/Unlocked • IS,AINS/Unlocked,automaticInService • OOS,DSBLD/Locked,disabled • OOS,MT/Locked,maintenance
Service State	Identifies the autonomously generated state that gives the overall condition of the port. Service states appear in the format: Primary State-Primary State Qualifier, Secondary State. For more information about service states, see Appendix C, "DWDM Enhanced State Model."	• IS-NR/Unlocked-enabled • OOS-AU,AINS/Unlocked-disabled, automaticInService • OOS-MA,DSBLD/Locked-enabled,disabled • OOS-MA,MT/Locked-enabled,maintenance
Line Direction	Display only. Displays the direction that the optical signal flows.	• West to East (the direction in which channels are added) • East to West (the direction in which channels are dropped)
Type	Port type.	• Output Express • Input Express • Out Com • Input Com • Drop
Power	Power value read by the photodiode associated with the port.	• Numeric value (dB)
AINS Soak	Sets the automatic in-service soak period.	• Duration of valid input signal, in hh.mm format, after which the card becomes in service (IS) automatically • 0 to 48 hours, 15-minute increments

Step 4 Return to your originating procedure (NTP).

DLP-G215 Change Optical Line Optics Thresholds for the 32WSS Card

Purpose	This task changes the optical line optics threshold settings for the 32WSS card.
Tools/Equipment	None
Prerequisite Procedures	DLP-G46 Log into CTC, page 2-25
Required/As Needed	As needed
Onsite/Remote	Onsite or remote
Security Level	Provisioning or higher

Step 1 In node view, double-click the 32WSS card where you want to change the optical line optics warning threshold settings.

Step 2 Click the **Provisioning > Optical Line** tab.

Step 3 Click the **Optics Thresholds** tab to display the warnings thresholds settings for each line.

Step 4 Modify any of the settings described in Table 10-17.

Table 10-17 32WSS Card Optical Line Optics Threshold Settings

Parameter	Description	Options
Port	Display only. Line designation information is read-only. The EXP-RX port receives an optical signal from another 32WSS module in the same network element. The EXP-TX port sends an optical signal to the other 32WSS module within the network element. For example, the two EXP ports are designated as 66 LINE-16-1-RX and 65 LINE-16-1-TX. The COM-TX port sends an aggregate optical signal to a booster card (for example, OSC-CSM or OSCM) for transmission outside of the network element. The COM-RX port receives the optical signal from a preamplifier and sends it to the optical splitter. For example, the two COM ports are designated as 67 LINE-16-2-TX and 68 LINE-16-2-RX. The DROP-TX port sends the split-off optical signal that contains drop channels to the 32DMX card where the channels are further processed and dropped. For example, the DROP-TX port is designated as 69 LINE-16-3-TX.	—
opwrMin (dBm)	Sets the warning thresholds minimum value (dBm).	User-defined value. Typically a negative optical power setting.
opwrMin (dBm)	Sets the warning thresholds maximum value (dBm).	User-defined value. Typically a positive optical power setting.

Step 5 Select the threshold alert type by clicking either the **Warning** or the **Alarm** radio button.

Step 6 Select the warning threshold interval by selecting either the **15 Min** or **1 Day** radio button.

Step 7 Click the **Refresh button**.

Step 8 Return to your originating procedure (NTP).

NTP-G94 Provision Pluggable Port Modules

Purpose	This procedure provisions pluggable port modules (PPMs) such as Small Form-factor Pluggables (SFPs) for TXP and MXP cards. Only the TXP_MR_10G does not accept PPMs.
Tools/Equipment	None
Prerequisite Procedures	NTP-G32 Install the Transponder and Muxponder Cards, page 3-30 DLP-G63 Install an SFP, page 3-32
Required/As Needed	Required
Onsite/Remote	Onsite or remote
Security Level	Provisioning or higher

Step 1 Complete the "DLP-G46 Log into CTC" task on page 2-25 to log into an ONS 15454 on the network.

Step 2 Click the **Alarms** tab:

a. Verify that the alarm filter is not turned on. See the "DLP-G128 Disable Alarm Filtering" task on page 7-32 as necessary.

b. Verify that no unexplained conditions appear on the network. If unexplained conditions appear, resolve them before continuing. Refer to the *Cisco ONS 15454 SONET and DWDM Troubleshooting Guide*.

c. Complete the "DLP-G114 Export CTC Data" task on page 7-4 to export alarm and condition information.

Step 3 In node view, double-click the card where you want to provision PPM settings.

Step 4 Click the **Provisioning > Pluggable Port Modules** tabs.

Step 5 In the Pluggable Port Modules pane, click **Create**. The Create PPM dialog box appears.

Step 6 In the Create PPM dialog box, complete the following:

- PPM—Click the slot number where the SFP is installed from the drop-down list.
- PPM Type—Click the number of ports supported by your SFP from the drop-down list. If only one port is supported, **PPM (1 port)** is the only menu option.

Step 7 Click **OK**. The newly created port appears in the Pluggable Port Modules pane and the Pluggable Ports pane.

Step 8 Repeat Steps 5 through 7 to create as many ports as needed.

Step 9 Click the PPM port row that appears in the Pluggable Port Modules pane. The highlight changes to dark blue.

Step 10 In the Selected PPM pane, click **Create**. The Create Port dialog box appears.

Step 11 In the Create Port dialog box, complete the following:

- Port—Click the PPM number and port number from the drop-down list. The first number indicates the PPM and the second number indicates the number of ports. For example, the first PPM with one port displays as 1-1 and the second PPM with one port displays as 2-1.
- Port Type—Click the type of port from the drop-down list. The port type menu displays supported port rates per card. See Table 10-18 for definitions of the supported rates per card.

Step 12 Repeat Steps 9 through 11 to configure the port rates as needed.

Table 10-18 PPM Port Types

Card	Port Type
TXP_MR_2.5G and TXPP_MR_2.5G	• OC-3/STM1—155 Mbps • OC-12/STM4—622 Mbps • OC-48/STM16—2.48 Gbps • ONE_GE—One Gigabit Ethernet 1,125 Gbps • ESCON—Enterprise System Connection (IBM signal) • DV6000—Proprietary signal from video vendor • SDI_D1_VIDEO—Serial Digital Interface and Digital Video signal type 1 • HDTV—High Definition Television • PASS-THRU—Not specified • FC1G—Fiber Channel 1,06 Gbps • FC2G—Fiber Channel 2,125 Gbps • FICON1G—Fiber CON 1,06 Gbps (IBM signal) • FICON2G—Fiber CON 2,125 Gbps (IBM signal) • ETR_CLO—IBM Sysplex timer • ISC compat—InterSystem Coupling link (IBM signal) • ISC peer—InterSystem Coupling link (IBM signal)
MXP_2.5G_10G and MXP_2.5G_10E	• OC-48/STM16—2.48 Gbps
TXP_MR_10E	• OC-192/STM-64—10 Gbps • 10G Ethernet LAN Phy—10 Gbps Ethernet • 10G Fiber Channel—10 Gbps Fiber Channel
MXP_MR_2.5G and MXPP_MR_2.5G	• FC1G—Fiber Channel 1,06 Gbps • FC2G—Fiber Channel 2,125 Gbps • FICON1G—Fiber CON 1,06 Gbps (IBM signal) • FICON2G—Fiber CON 2,125 Gbps (IBM signal) • ONE_GE—One Gigabit Ethernet 1,125 Gbps

Step 13 Click **OK**.

Stop. You have completed this procedure.

NTP-G95 Delete Pluggable Port Modules

Purpose	This procedure deletes PPMs such as SFPs for TXP and MXP cards. Only the TXP_MR_10G does not accept PPMs.
Tools/Equipment	None
Prerequisite Procedures	NTP-G94 Provision Pluggable Port Modules, page 10-29
Required/As Needed	As needed
Onsite/Remote	Onsite or remote
Security Level	Provisioning or higher

Step 1 Complete the "DLP-G46 Log into CTC" task on page 2-25 to log into an ONS 15454 on the network.

Step 2 Click the **Alarms** tab:

a. Verify that the alarm filter is not turned on. See the "DLP-G128 Disable Alarm Filtering" task on page 7-32 as necessary.

b. Verify that no unexplained conditions appear on the network. If unexplained conditions appear, resolve them before continuing. Refer to the *Cisco ONS 15454 SONET and DWDM Troubleshooting Guide*.

c. Complete the "DLP-G114 Export CTC Data" task on page 7-4 to export alarm and condition information.

Step 3 In node view, double-click the card where you want to delete PPM settings.

Step 4 Click the **Provisioning > Pluggable Port Modules** tabs.

Step 5 To delete all PPM provisioning on a card:

a. Click the PPM line that appears in the Pluggable Port Modules pane. The highlight changes to dark blue.

b. Click **Delete**. The Delete PPM dialog box appears.

c. Click **Yes**. The PPM provisioning is removed from the Pluggable Port Modules pane and the Selected PPM pane.

Step 6 To delete PPM provisioning on a port:

a. Click the PPM line that appears in the Selected PPM pane. The highlight changes to dark blue.

b. Click **Delete**. The Delete Port dialog box appears.

c. Click **Yes**. The PPM provisioning is removed from the Selected PPM pane.

Stop. You have completed this procedure.

NTP-G96 Modify Line Settings and PM Parameter Thresholds for TXP_MR_10G and TXP_MR_10E Cards

Purpose	This procedure changes the line and threshold settings for TXP_MR_10G and TXP_MR_10E transponder cards.
Tools/Equipment	None
Prerequisite Procedures	NTP-G32 Install the Transponder and Muxponder Cards, page 3-30 DLP-G63 Install an SFP, page 3-32 NTP-G94 Provision Pluggable Port Modules, page 10-29.
Required/As Needed	As needed
Onsite/Remote	Onsite or remote
Security Level	Provisioning or higher

Note The TXP_MR_10G card does not support PPMs.

Step 1 Complete the "DLP-G46 Log into CTC" task on page 2-25 at the node where you want to change the transponder card settings. If you are already logged in, proceed to Step 2.

Step 2 Complete the "NTP-G103 Back Up the Database" procedure on page 11-2.

Step 3 Perform any of the following tasks as needed:

- DLP-G216 Change Card Settings for TXP_MR_10G and TXP_MR_10E Cards, page 10-33
- DLP-G217 Change Line Settings for TXP_MR_10G and TXP_MR_10E Cards, page 10-34
- DLP-G219 Change Line Threshold Settings for TXP_MR_10G and TXP_MR_10E Cards, page 10-38
- DLP-G220 Change Optical Thresholds Settings for TXP_MR_10G and TXP_MR_10E Cards, page 10-39
- DLP-G218 Change Section Trace Settings for the TXP_MR_10G Card, page 10-37
- DLP-G221 Change OTN Settings for TXP_MR_10G and TXP_MR_10E Cards, page 10-40

Step 4 Complete the "NTP-G103 Back Up the Database" procedure on page 11-2.

Stop. You have completed this procedure.

DLP-G216 Change Card Settings for TXP_MR_10G and TXP_MR_10E Cards

Purpose	This task changes the card settings for TXP_MR_10G and TXP_MR_10E multirate (10 Gbps) transponder cards.
Tools/Equipment	None
Prerequisite Procedures	DLP-G46 Log into CTC, page 2-25
Required/As Needed	As needed
Onsite/Remote	Onsite or remote
Security Level	Provisioning or higher

Step 1 In node view, double-click the TXP_MR_10G or TXP_MR_10E card where you want to change the card settings.

Step 2 Click the **Provisioning > Card** tabs.

Step 3 Modify any of the settings described in Table 10-19.

Table 10-19 TXP_MR_10G and TXP_MR_10E Transponder Card Settings

Parameter	Description	Options
Termination Mode	Sets the mode of operation. See the "14.12 Transponder and Muxponder Termination Modes" section on page 14-122 for more information.	• Transparent • Section (only for TXP_MR_10E) • Line
AIS/Squelch Configuration	(TXP_MR_10E only.) Sets the transparent termination mode configuration.	• Squelch • AIS
Wavelength	Sets the wavelength of the dense wavelength division multiplexing (DWDM) side optical transmitter.	• First Tunable Wavelength • Further wavelengths in 100-GHz ITU spacing • Supported wavelengths are in white and marked by asterisks (**); unsupported wavelengths are gray

Table 10-19 TXP_MR_10G and TXP_MR_10E Transponder Card Settings (continued)

Parameter	Description	Options
Regeneration Peer Slot	Sets the regeneration peer slot.	• None • 1 • 2 • 3 • 4 • 5 • 6 • 12 • 13 • 14 • 15 • 16 • 17
Regeneration Group Name	Sets the name of the regeneration group.	Type the name in the field.
Card Parameters	Displays available tunable wavelengths.	Information field

Step 4 Click **Apply**.

Step 5 Return to your originating procedure (NTP).

DLP-G217 Change Line Settings for TXP_MR_10G and TXP_MR_10E Cards

Purpose	This task changes the line settings for TXP_MR_10G and TXP_MR_10E transponder cards.
Tools/Equipment	None
Prerequisite Procedures	DLP-G46 Log into CTC, page 2-25
Required/As Needed	As needed
Onsite/Remote	Onsite or remote
Security Level	Provisioning or higher

Step 1 In node view, double-click the TXP_MR_10G or TXP_MR_10E card where you want to change the line settings.

Step 2 Click the **Provisioning > Line > SONET (including 10G Ethernet WAN phy)** tab.

Step 3 Modify any of the settings described in Table 10-20.

Note In Table 10-20, some parameter tabs do not always apply to both the TXP_MR_10G and TXP_MR_10E cards. When the tabs do not apply, they will not appear to the user.

Table 10-20 TXP_MR_10G and TXP_MR_10E Transponder Card Line Settings

Parameter	Description	Options
Port	Display only. Displays the port number.	• 1-1 (OC192) • 2 (Trunk)
Port Name	Provides the ability to assign the specified port a name.	User-defined. Name can be up to 32 alphanumeric/special characters. Blank by default. See the "DLP-G104 Assign a Name to a Port" task on page 6-8.
Admin State	Sets the port service state unless network conditions prevent the change. For more information about administrative states, see Appendix C, "DWDM Enhanced State Model."	• IS/Unlocked • IS,AINS/Unlocked,automaticInService • OOS,DSBLD/Locked,disabled • OOS,MT/Locked,maintenance
Service State	Identifies the autonomously generated state that gives the overall condition of the port. Service states appear in the format: Primary State-Primary State Qualifier, Secondary State. For more information about service states, see Appendix C, "DWDM Enhanced State Model."	• IS-NR/Unlocked-enabled • OOS-AU,AINS/Unlocked-disabled, automaticInService • OOS-MA,DSBLD/Locked-enabled,disabled • OOS-MA,MT/Locked-enabled,maintenance
SF BER	(Cards with no PPM only.) Sets the signal fail bit error rate.	• 1E-3 • 1E-4 • 1E-5
SD BER	(Cards with no PPM only.) Sets the signal degrade bit error rate.	• 1E-5 • 1E-6 • 1E-7 • 1E-8 • 1E-9
AINS Soak	(Cards with no PPM only.) Sets the automatic in-service soak period. Double click the time and use the up and down arrows to change settings.	• Duration of valid input signal, in hh.mm format, after which the card becomes in service (IS) automatically • 0 to 48 hours, 15-minute increments
Type	(Cards with no PPM only.) The optical transport type.	• SONET • SDH

Table 10-20 TXP_MR_10G and TXP_MR_10E Transponder Card Line Settings (continued)

Parameter	Description	Options
ALS Mode	Sets the automatic laser shutdown function mode. The DWDM transmitter supports ALS according to ITU-T G.644 (06/99). ALS can be disabled or be set for three mode options.	• Disable: ALS is off; the laser is not automatically shut down when traffic outages (LOS) occur. • Auto Restart: ALS is on; the laser automatically shuts down when traffic outages (LOS) occur. It automatically restarts when the conditions that caused the outage are resolved. • Manual Restart: ALS is on; the laser automatically shuts down when traffic outages (LOS) occur. However, the laser must be manually restarted when conditions that caused the outage are resolved. • Manual Restart for Test: Manually restarts the laser for testing.
ProvidesSync	(TXP_MR_10E, OC192 only.) Sets the ProvidesSync card parameter. If checked, the card is provisioned as a network element timing reference.	Checked or unchecked
SyncMsgIn	(TXP_MR_10E, OC192 only.) Sets the EnableSync card parameter. Enables synchronization status messages (S1 byte), which allow the node to choose the best timing source.	Checked or unchecked
Send DoNotUse	(TXP_MR_10E, OC192 only.) Sets the Send DoNotUse card state. When checked, sends a DUS (do not use) message on the S1 byte.	Checked or unchecked
Max Size	(TXP_MR_10E, 10_GE only.) Sets the maximum Ethernet packet size.	• 1548 bytes • Jumbo (64 to 9,216 bytes)
Incoming MAC Address	(TXP_MR_10E, 10_GE only.) Sets the incoming MAC address	Value of MAC address. 6 bytes in hexadecimal format.

Step 4 Click **Apply**.

Step 5 Return to your originating procedure (NTP).

DLP-G218 Change Section Trace Settings for the TXP_MR_10G Card

Purpose	This task changes the section trace settings for the TXP_MR_10G transponder card.
Tools/Equipment	None
Prerequisite Procedures	DLP-G46 Log into CTC, page 2-25
Required/As Needed	As needed
Onsite/Remote	Onsite or remote
Security Level	Provisioning or higher

Step 1 In node view, double-click the TXP_MR_10G card where you want to change the section trace settings.

Step 2 Click the **Provisioning > Line > Section Trace** tab.

Note The Section Trace tab is available for the TXP_MR_10G card only if no PPM has been created or if only an OC192 PPM has been created. The tab is not available if a TEN_GE or FC10G PPM has been created.

Step 3 Modify any of the settings described in Table 10-21.

Table 10-21 TXP_MR_10G Transponder Card Section Trace Settings

Parameter	Description	Options
Port	Sets the port number.	• 1-1 (OC-192) • 2 (Trunk)
Trace Mode	Sets the trace mode.	• Off/None • Manual
Section Trace String Size	Sets the trace string size.	• 1 byte • 16 byte
Transmit	Displays the current transmit string; sets a new transmit string. You can select the Hex Mode or ASCII Mode button to change string input type.	String of trace string size
Expected	Displays the current expected string; sets a new expected string. You can select the Hex Mode or ASCII Mode button to change string input type.	String of trace string size
Received	Display only. Displays the current received string. You can press the Refresh button to manually refresh this display, or select the Auto-refresh every 5 sec check box to keep this panel updated.	String of trace string size

Step 4 Click **Apply**.

Step 5 Return to your originating procedure (NTP).

DLP-G219 Change Line Threshold Settings for TXP_MR_10G and TXP_MR_10E Cards

Purpose	This task changes the line threshold settings for TXP_MR_10G and TXP_MR_10E transponder cards.
Tools/Equipment	None
Prerequisite Procedures	DLP-G46 Log into CTC, page 2-25
Required/As Needed	As needed
Onsite/Remote	Onsite or remote
Security Level	Provisioning or higher

Step 1 In node view, double-click the TXP_MR_10G card where you want to change the line threshold settings.

Step 2 Click the **Provisioning > Line Thresholds** tabs.

Step 3 Modify any of the settings described in Table 10-22.

Note The Line Thresholds setting are available for the TXP_MR_10E card only if no PPM has been created or if only an OC192 PPM has been created. The settings are not available if a TEN_GE or FC10G PPM has been created.

Table 10-22 TXP_MR_10G and TXP_MR_10E Transponder Card Line Threshold Settings

Parameter	Description	Options
Port	Display only. Port number	• 1-1 (OC192) • 2 (Trunk)
CV	Coding violations	Numeric. Can be set for Near End or Far End, for 15-minute or one-day intervals, or for Line (Far End only), Line, or Section. Select a bullet and click **Refresh**.
ES	Errored seconds	Numeric. Can be set for Near End or Far End, for 15-minute or one-day intervals, or for Line (Far End only), Line, or Section. Select a bullet and click **Refresh**.
SES	Severely errored seconds	Numeric. Can be set for Near End or Far End, for 15-minute or one-day intervals, or for Line (Far End only), Line, or Section. Select a bullet and click **Refresh**.
SEFS	(Section only.) Severely errored framing seconds	Numeric. Can be set for Far End, for 15-minute or one-day intervals for Section only. Select the bullet and click **Refresh**.

Table 10-22 TXP_MR_10G and TXP_MR_10E Transponder Card Line Threshold Settings (continued)

Parameter	Description	Options
FC	Failure count	Numeric. Can be set for Near End or Far End, for 15-minute or one-day intervals, or for Line (Far End only), Line, or Section. Select a bullet and click **Refresh**.
UAS	Unavailable seconds	Numeric. Can be set for Near End or Far End, for 15-minute or one-day intervals, or for Line (Far End only), Line, or Section. Select a bullet and click **Refresh**.

Step 4 Click **Apply**.

Step 5 Return to your originating procedure (NTP).

DLP-G220 Change Optical Thresholds Settings for TXP_MR_10G and TXP_MR_10E Cards

Purpose	This task changes the optical threshold settings for TXP_MR_10G and TXP_MR_10E transponder cards.
Tools/Equipment	None
Prerequisite Procedures	DLP-G46 Log into CTC, page 2-25
Required/As Needed	As needed
Onsite/Remote	Onsite or remote
Security Level	Provisioning or higher

Step 1 In node view, double-click the transponder card where you want to change the optical threshold settings.

Step 2 Click the **Provisioning > Optical Thresholds** tabs.

Step 3 Modify any of the settings described in Table 10-23.

Table 10-23 TXP_MR_10G and TXP_MR_10E Transponder Card Optical Thresholds Settings

Parameter	Description	Options
Port	Display only. Displays the port number and name.	• 1 • 2
Laser Bias High (%)	Sets the warning threshold for low laser bias current.	Numeric, in percent Range 0 to 100
RX Power High (dBm)	Sets the warning threshold for high receiver input power.	Numeric, in dBm Range –40.0 to +30.0
RX Power Low (dBm)	Sets the warning threshold for low receiver input power.	Numeric, in dBm Range –40.0 to +30.0

Table 10-23 TXP_MR_10G and TXP_MR_10E Transponder Card Optical Thresholds Settings

Parameter	Description	Options
TX Power High (dBm)	Sets the warning threshold for high transmitter output power.	Numeric, in dBm Range –40.0 to +30.0
TX Power Low (dBm)	Sets the warning threshold for low transmitter output power.	Numeric, in dBm Range –40.0 to +30.0

Step 4 Click **Apply**.

Step 5 Select the **TCA** or **Alarm** radio button.

Step 6 Select a **15 Min** or **1 Day** performance monitoring interval radio button (available for threshold crossing alerts [TCA] only), and then click **Refresh**.

Step 7 Return to your originating procedure (NTP).

DLP-G221 Change OTN Settings for TXP_MR_10G and TXP_MR_10E Cards

Purpose	This task changes the line optical transport network (OTN) settings for TXP_MR_10G and TXP_MR_10E transponder cards.
Tools/Equipment	None
Prerequisite Procedures	DLP-G46 Log into CTC, page 2-25
Required/As Needed	As needed
Onsite/Remote	Onsite or remote
Security Level	Provisioning or higher

Step 1 In node view, double-click the TXP_MR_10G or TXP_MR_10E card where you want to change the OTN settings.

Step 2 Click lone of the **Provisioning > OTN** tabs (OTN Lines, G.709 Thresholds, FEC Thresholds, or Trail Trace Identifier).

Step 3 Modify any of the settings described in Tables 10-24 through 10-27.

Table 10-24 describes the values on the Provisioning > OTN > OTN Lines tab.

Table 10-24 TXP_MR_10G and TXP_MR_10E Transponder Card OTN Settings

Parameter	Description	Options
Port #	Display only. Displays the port number.	2
G.709 OTN	Sets the OTN lines according to ITU-T G.709. Check box to enable.	• Enabled • Disabled
FEC	Sets the OTN lines FEC mode. FEC mode can be Disabled, Enabled or Enhanced FEC mode can be enabled (to provide greater range and lower bit error rate).	• Disabled (FEC OFF) • Standard (FEC ON • Enhanced (E-FEC ON)
SF BER	Sets the signal fail bit error rate.	• 1E-5

Table 10-24 TXP_MR_10G and TXP_MR_10E Transponder Card OTN Settings (continued)

Parameter	Description	Options
SD BER	Sets the signal degrade bit error rate.	• 1E-5 • 1E-6 • 1E-7 • 1E-8 • 1E-9
Asynch/Synch Mapping	(TXP_MR_10E only.) The card can perform multiplexing per ITU-T G.709. The ODUk (client SONET/SDH payload) can be mapped to the Optical Channel (OTUk) either asynchronously or synchronously with this setting.	• Asynch mapping • Synch mapping

Table 10-25 describes the values on the Provisioning > OTN > G.709 Thresholds tab.

Table 10-25 TXP_MR_10G and TXP_MR_10E Transponder Card ITU-T G.709 Threshold Settings

Parameter	Description	Options
Port	Display only. Port number.	2
ES	Severely errored seconds. Two types of thresholds can be asserted. Selecting the SM (OTUk) radio button selects FEC and overhead management and performance monitoring using OTUk. Selecting the PM radio button selects path performance monitoring using ODUk.	Numeric. Can be set for Near End or Far End, for 15-minute or one-day intervals, or for SM (OTUk) or PM (ODUk). Select a bullet and click **Refresh**.
SES	Severely errored seconds	Numeric. Can be set for Near End or Far End, for 15-minute or one-day intervals, or for SM (OTUk) or PM (ODUk). Select the bullet and click **Refresh**.
UAS	Unavailable seconds	Numeric. Can be set for Near End or Far End, for 15-minute or one-day intervals, or for SM (OTUk) or PM (ODUk). Select the bullet and click **Refresh**.
BBE	Background block errors	Numeric. Can be set for Near End or Far End, for 15-minute or one-day intervals, or for SM (OTUk) or PM (ODUk). Select the bullet and click **Refresh**.
FC	Failure counter	Numeric. Can be set for Near End or Far End, for 15-minute or one-day intervals, or for SM (OTUk) or PM (ODUk). Select the bullet and click **Refresh**.

Table 10-26 describes the values on the Provisioning > OTN > FEC Thresholds tab.

Table 10-26 TXP_MR_10G and TXP_MR_10E Transponder Card FEC Threshold Settings

Parameter	Description	Options
Port	Display only. Displays the port number and optional name.	2
Bit Errors Corrected	Displays the number of bit errors corrected during the selected time period.	Numeric display. Can be set for 15-minute or one-day intervals.
Uncorrectable Words	Displays the number of uncorrectable words in the selected time period.	Numeric display. Can be set for 15-minute or one-day intervals.

Table 10-27 describes the values on the Provisioning > OTN > Trail Trace Identifier tab.

Table 10-27 TXP_MR_10G and TXP_MR_10E Transponder Card Trail Trace Identifier Settings

Parameter	Description	Options
Port	Sets the port number.	• 1 • 2
Level	Sets the level.	• Section • Path
Trace Mode	Sets the trace mode.	• Off/None • Auto • Manual
Transmit	Displays the current transmit string; sets a new transmit string.	String of trace string size; trail trace identifier is 64 bytes in length.
Expected	Displays the current expected string; sets a new expected string.	String of trace string size
Received	Display only. Displays the current received string. You can press the Refresh button to manually refresh this display, or select the Auto-refresh every 5 sec check box to keep this panel updated.	String of trace string size

Step 4 Click **Apply**.

Step 5 Return to your originating procedure (NTP).

NTP-G97 Modify Line Settings and PM Parameter Thresholds for MXP_2.5G_10G and MXP_2.5G_10E Cards

Purpose	This procedure changes the line and threshold settings for MXP_2.5G_10G and MXP_2.5G_10E muxponder cards.
Tools/Equipment	None
Prerequisite Procedures	NTP-G32 Install the Transponder and Muxponder Cards, page 3-30. DLP-G63 Install an SFP, page 3-32 NTP-G94 Provision Pluggable Port Modules, page 10-29.
Required/As Needed	As needed
Onsite/Remote	Onsite or remote
Security Level	Provisioning or higher

Step 1 Complete the "DLP-G46 Log into CTC" task on page 2-25 at the node where you want to change the muxponder card settings. If you are already logged in, proceed to Step 2.

Step 2 Complete the "NTP-G103 Back Up the Database" procedure on page 11-2.

Step 3 Perform any of the following tasks as needed:

- DLP-G222 Change Card Settings for MXP_2.5G_10G and MXP 2.5G_10E Cards, page 10-44
- DLP-G223 Change Line Settings for MXP_2.5G_10G and MXP 2.5G_10E Cards, page 10-45
- DLP-G224 Change Section Trace Settings for MXP_2.5G_10G and MXP_2.5G_10E Cards, page 10-47
- DLP-G225 Change Trunk Settings for MXP_2.5G_10G and MXP_2.5G_10E Cards, page 10-48
- DLP-G226 Change Line Thresholds Settings for MXP_2.5G_10G and MXP 2.5G_10E Cards, page 10-49
- DLP-G227 Change Optical Threshold Settings for MXP_2.5G_10G and MXP_2.5G_10E Cards, page 10-51
- DLP-G228 Change Line OTN Settings for MXP_2.5G_10G and MXP_2.5G_10E Cards, page 10-52

Step 4 Complete the "NTP-G103 Back Up the Database" procedure on page 11-2.

Stop. You have completed this procedure.

DLP-G222 Change Card Settings for MXP_2.5G_10G and MXP 2.5G_10E Cards

Purpose	This task changes the card settings for MXP_2.5G_10G or MXP_2.5G_10E muxponder cards, including payload type, termination mode, and wavelength.
Tools/Equipment	None
Prerequisite Procedures	DLP-G46 Log into CTC, page 2-25
Required/As Needed	As needed
Onsite/Remote	Onsite or remote
Security Level	Provisioning or higher

Step 1 In node view, double-click the MXP_2.5G_10G or and MXP_2.5G_10E card where you want to change the card settings.

Step 2 Click the **Provisioning > Card** tabs.

Step 3 Modify any of the settings described in Table 10-28.

Table 10-28 MXP_2.5G_10G or MXP_2.5G_10E Muxponder Card Settings

Parameter	Description	Options
Termination Mode	Sets the mode of operation. Options that do not apply to a card do not display. See "14.12 Transponder and Muxponder Termination Modes" section on page 14-122 for more information.	• Transparent • Section • Line
Wavelength	Sets the wavelength of the DWDM trunk side of the optical transmitter.	• First Tunable Wavelength • Further wavelengths in 100-GHz ITU grid specification • Supported wavelengths are in white and marked by asterisks (**); unsupported wavelengths are gray
Card Parameters	Displays the settings for the card.	Information only.

Step 4 Click **Apply**.

Step 5 Return to your originating procedure (NTP).

DLP-G223 Change Line Settings for MXP_2.5G_10G and MXP 2.5G_10E Cards

Purpose	This task changes the line settings for MXP_2.5G_10G or MXP_2.5G_10E muxponder cards.
Tools/Equipment	None
Prerequisite Procedures	DLP-G46 Log into CTC, page 2-25
Required/As Needed	As needed
Onsite/Remote	Onsite or remote
Security Level	Provisioning or higher

Step 1 Double-click the MXP_2.5G_10G or MXP_2.5G_10E card where you want to change the line settings.

Step 2 Click the **Provisioning > Line > SONET** tab.

Note The SONET tab appears only if you have created a PPM for the card.

Step 3 Modify any of the settings described in Table 10-29.

Table 10-29 MXP_2.5G_10G or MXP_2.5G_10E Muxponder Card Line Settings

Parameter	Description	Options
Port #	Display only. Displays the port number. Ports 1 to 4 are client ports (OC-48/STS-16) and Port 5 is the DWDM trunk (OC-192/STS-64) that provides wavelength services.	• 1 • 2 • 3 • 4 • 5
Port Name	Provides the ability to assign the specified port a logical name.	User-defined. Name can be up to 32 alphanumeric/special characters. Blank by default. See the "DLP-G104 Assign a Name to a Port" task on page 6-8.
Admin State	Sets the port service state unless network conditions prevent the change. For more information about administrative states, see Appendix C, "DWDM Enhanced State Model."	• IS/Unlocked • IS,AINS/Unlocked,automaticInService • OOS,DSBLD/Locked,disabled • OOS,MT/Locked,maintenance
Service State	Identifies the autonomously generated state that gives the overall condition of the port. Service states appear in the format: Primary State-Primary State Qualifier, Secondary State. For more information about service states, see Appendix C, "DWDM Enhanced State Model."	• IS-NR/Unlocked-enabled • OOS-AU,AINS/Unlocked-disabled, automaticInService • OOS-MA,DSBLD/Locked-enabled,disabled • OOS-MA,MT/Locked-enabled,maintenance

Table 10-29 MXP_2.5G_10G or MXP_2.5G_10E Muxponder Card Line Settings (continued)

Parameter	Description	Options
ALS Mode	Sets the automatic laser shutdown function mode. The DWDM transmitter supports ALS according to ITU-T G.644 (06/99). ALS can be disabled or be set for three mode options.	• Disable: ALS is off; the laser is not automatically shut down when traffic outages (LOS) occur. • Auto Restart: ALS is on; the laser automatically shuts down when traffic outages (LOS) occur. It automatically restarts when the conditions that caused the outage are resolved. • Manual Restart: ALS is on; the laser automatically shuts down when traffic outages (LOS) occur. However, the laser must be manually restarted when conditions that caused the outage are resolved. • Manual Restart for Test: Manually restarts the laser for testing.
SF BER	(Cards with no PPM only.) Sets the signal fail bit error rate.	• 1E-3 • 1E-4 • 1E-5
SD BER	(Cards with no PPM only.) Sets the signal degrade bit error rate.	• 1E-5 • 1E-6 • 1E-7 • 1E-8 • 1E-9
AINS Soak	(Cards with no PPM only.) Sets the automatic in-service soak period. Double click the time and use the up and down arrows to change settings.	• Duration of valid input signal, in hh.mm format, after which the card becomes in service (IS) automatically • 0 to 48 hours, 15-minute increments
Type	(Cards with no PPM only.) The optical transport type	• SONET • SDH
ProvidesSync	(Cards with no PPM only.) Sets the ProvidesSync card parameter. If checked, the card is provisioned as a network element timing reference.	Checked or unchecked
Enable Sync Msg	(Cards with no PPM only.) Enables synchronization status messages (S1 byte), which allow the node to choose the best timing source.	• Yes • No
Send DoNotUse	(Cards with no PPM only.) When checked, sends a DUS (do not use) message on the S1 byte.	• Yes • No

Step 4 Click **Apply**.

Step 5 Return to your originating procedure (NTP).

DLP-G224 Change Section Trace Settings for MXP_2.5G_10G and MXP_2.5G_10E Cards

Purpose	This task changes the section trace settings for MXP_2.5G_10G and MXP_2.5G_10E muxponder cards.
Tools/Equipment	None
Prerequisite Procedures	DLP-G46 Log into CTC, page 2-25
Required/As Needed	As needed
Onsite/Remote	Onsite or remote
Security Level	Provisioning or higher

Step 1 In node view, double-click the MXP_2.5G_10E or MXP_2.5G_10E card where you want to change the section trace settings.

Step 2 Click the **Provisioning > Line > Section Trace** tab.

Note The Section Trace tab appears only if you have created a PPM for the card.

Step 3 Modify any of the settings described in Table 10-30.

Table 10-30 TXP_MR_10G and MXP_MR_10E Muxponder Card Section Trace Settings

Parameter	Description	Options
Port	Sets the port number.	• 1 • 2 • 3 • 4
Trace Mode	Sets the trace mode.	• Off/None • Manual
Section Trace String Size	Sets the trace string size. Select either radio button.	• 1 byte • 16 byte
Transmit	Displays the current transmit string; sets a new transmit string. You can select the Hex Mode or ASCII Mode button to change string input type.	String of trace string size
Expected	Displays the current expected string; sets a new expected string. You can select the Hex Mode or ASCII Mode button to change string input type.	String of trace string size
Received	Display only. Displays the current received string. You can press the Refresh button to manually refresh this display, or select the Auto-refresh every 5 sec check box to keep this panel updated.	String of trace string size

Step 4 Click **Apply**.

Step 5 Return to your originating procedure (NTP).

DLP-G225 Change Trunk Settings for MXP_2.5G_10G and MXP_2.5G_10E Cards

Purpose	This task changes the trunk settings for MXP_2.5G_10G and MXP_2.5G_10E muxponder cards.
Tools/Equipment	None
Prerequisite Procedures	DLP-G46 Log into CTC, page 2-25
Required/As Needed	As needed
Onsite/Remote	Onsite or remote
Security Level	Provisioning or higher

Step 1 In node view, double-click the MXP_2.5G_10E or MXP_2.5G_10E card where you want to change the section trace settings.

Step 2 Click the **Provisioning > Line > Trunk** tab.

Step 3 Modify any of the settings described in Table 10-31.

Table 10-31 TXP_MR_10G and MXP_MR_10E Muxponder Card Trunk Settings

Parameter	Description	Options
Port #	Display only. Displays the port number. Ports 1 to 4 are client ports (OC-48/STS-16) and Port 5 is the DWDM trunk (OC-192/STS-64) that provides wavelength services	• 5
Port Name	Provides the ability to assign the specified port a logical name.	User-defined. Name can be up to 32 alphanumeric/special characters. Blank by default. See the "DLP-G104 Assign a Name to a Port" task on page 6-8.
Admin State	Sets the port service state unless network conditions prevent the change. For more information about administrative states, see Appendix C, "DWDM Enhanced State Model."	• IS/Unlocked • IS,AINS/Unlocked,automaticInService • OOS,DSBLD/Locked,disabled • OOS,MT/Locked,maintenance

Table 10-31 TXP_MR_10G and MXP_MR_10E Muxponder Card Trunk Settings (continued)

Parameter	Description	Options
Service State	Identifies the autonomously generated state that gives the overall condition of the port. Service states appear in the format: Primary State-Primary State Qualifier, Secondary State. For more information about service states, see Appendix C, "DWDM Enhanced State Model."	• IS-NR/Unlocked-enabled • OOS-AU,AINS/Unlocked-disabled, automaticInService • OOS-MA,DSBLD/Locked-enabled,disabled • OOS-MA,MT/Locked-enabled,maintenance
ALS Mode	Sets the automatic laser shutdown function mode. The DWDM transmitter supports ALS according to ITU-T G.644 (06/99). ALS can be disabled or be set for three mode options.	• Disable: ALS is off; the laser is not automatically shut down when traffic outages (LOS) occur. • Auto Restart: ALS is on; the laser automatically shuts down when traffic outages (LOS) occur. It automatically restarts when the conditions that caused the outage are resolved. • Manual Restart: ALS is on; the laser automatically shuts down when traffic outages (LOS) occur. However, the laser must be manually restarted when conditions that caused the outage are resolved. • Manual Restart for Test: Manually restarts the laser for testing.

Step 4 Click **Apply**.

Step 5 Return to your originating procedure (NTP).

DLP-G226 Change Line Thresholds Settings for MXP_2.5G_10G and MXP 2.5G_10E Cards

Purpose	This task changes the line threshold settings for MXP_2.5G_10G or MXP_2.5G_10E muxponder cards.
Tools/Equipment	None
Prerequisite Procedures	DLP-G46 Log into CTC, page 2-25
Required/As Needed	As needed
Onsite/Remote	Onsite or remote
Security Level	Provisioning or higher

Step 1 In node view, double-click the MXP_2.5G_10G or MXP_2.5G_10E card where you want to change the line threshold settings.

Step 2 Click the **Provisioning > Line Thresholds** tabs.

Step 3 Modify any of the settings described in Table 10-32.

Note In Table 10-32, some parameter tabs or selections do not always apply to both the MXP_2.5G_10G and MXP_2.5G_10E cards. When the tabs or selections do not apply they do not appear to the user.

Table 10-32 MXP_2.5G_10G or MXP_2.5G_10E Muxponder Card Line Threshold Settings

Parameter	Description	Options
Port	Display only. Port number	• 1 • 2 • 3 • 4 • 5
CV	Coding violations	Numeric. Can be set for Near End or Far End, for 15-minute or one-day intervals, or for Line (Far End only), Section, or Path. Select a bullet and click **Refresh**.
ES	Errored seconds	Numeric. Can be set for Near End or Far End, for 15-minute or one-day intervals, or for Line (Far End only), Section, or Path. Select the bullet and click **Refresh**.
SES	Severely errored seconds	Numeric. Can be set for Near End or Far End, for 15-minute or one-day intervals, or for Line (Far End only), Section, or Path. Select the bullet and click **Refresh**.
SEFS	(Section only.) Severely errored framing seconds	Numeric. Can be set for Far End, for 15-minute or one-day intervals for Section only. Select the bullet and click **Refresh**.
FC	(Line only.) Failure count	Numeric. Can be set for Near End or Far End, for 15-minute or one-day intervals, for Line only. Select the bullet and click **Refresh**.
UAS	(Line only.) Unavailable seconds	Numeric. Can be set for Near End or Far End, for 15-minute or one-day intervals, for Line only. Select the bullet and click **Refresh**.

Step 4 Click **Apply**.

Step 5 Return to your originating procedure (NTP).

DLP-G227 Change Optical Threshold Settings for MXP_2.5G_10G and MXP_2.5G_10E Cards

Purpose	This task changes the optical threshold settings for MXP_2.5G_10G or MXP_2.5G_10E muxponder cards.
Tools/Equipment	None
Prerequisite Procedures	DLP-G46 Log into CTC, page 2-25
Required/As Needed	As needed
Onsite/Remote	Onsite or remote
Security Level	Provisioning or higher

Step 1 In node view, double-click the MXP_2.5G_10G or MXP_2.5G_10E card where you want to change the optical threshold settings.

Step 2 Click the **Provisioning > Optics Thresholds** tabs.

Step 3 Modify any of the settings described in Table 10-33.

Table 10-33 MXP_2.5G_10G or MXP_2.5G_10E Muxponder Card Optical Threshold Settings

Parameter	Description	Options
Port	Display only. Displays the port number.	• 1 • 2 • 3 • 4 • 5
Laser Bias Low (%)	Sets the warning threshold for low laser bias current.	Numeric, in percent Range 0 to 100
RX Power High (dBm)	Sets the warning threshold for high receiver input power.	Numeric, in dBm Range –40.0 to +30.0
RX Power Low (dBm)	Sets the warning threshold for low receiver input power.	Numeric, in dBm Range –40.0 to +30.0
TX Power High (dBm)	Sets the warning threshold for high transmitter output power.	Numeric, in dBm Range –40.0 to +30.0
TX Power Low (dBm)	Sets the warning threshold for low transmitter output power.	Numeric, in dBm Range –40.0 to +30.0

Step 4 Click **Apply**.

Step 5 Select the **TCA** or **Alarm** radio button.

Step 6 Select a **15 Min** or **1 Day** interval radio button (available for TCA only), and then click **Refresh**.

Step 7 Return to your originating procedure (NTP).

DLP-G228 Change Line OTN Settings for MXP_2.5G_10G and MXP_2.5G_10E Cards

Purpose	This task changes the line OTN settings for MXP_2.5G_10G or MXP_2.5G_10E muxponder cards.
Tools/Equipment	None
Prerequisite Procedures	DLP-G46 Log into CTC, page 2-25
Required/As Needed	As needed
Onsite/Remote	Onsite or remote
Security Level	Provisioning or higher

Step 1 In node view, double-click the MXP_2.5G_10G or MXP_2.5G_10E card where you want to change the line OTN settings.

Step 2 Click one of the **Provisioning > OTN** tabs (OTN Lines, OTN G.709 Thresholds, FEC Thresholds, or Trail Trace Identifier tab).

Step 3 Modify any of the settings described in Tables 10-34 through 10-37.

Table 10-34 describes the values on the Provisioning > OTN > OTN Lines tab.

Note In Table 10-34, some parameter tabs or values do not always apply to both the MXP_2.5G_10G and MXP_2.5G_10E cards. When the tabs or values do not apply, they do not appear to the user.

Table 10-34 MXP_2.5G_10G or MXP_2.5G_10E Muxponder Card Line OTN Settings

Parameter	Description	Options
Port #	Display only. Displays the port number.	5
G.709 OTN	Sets the OTN lines according to ITU-T G.709.	• Enabled • Disabled
FEC	Sets the OTN line FEC mode. FEC mode can be Disabled or Enabled. Enhanced FEC mode can be enabled (to provide greater range and lower bit error rate). E-FEC applies only to the MXP_2.5G_10E card.	• Disabled (FEC OFF) • Standard (FEC ON) • Enhanced (E-FEC ON)
SF BER	Sets the signal fail bit error rate.	• 1E-5

Table 10-34 MXP_2.5G_10G or MXP_2.5G_10E Muxponder Card Line OTN Settings (continued)

Parameter	Description	Options
SD BER	Sets the signal degrade bit error rate.	• 1E-5 • 1E-6 • 1E-7 • 1E-8 • 1E-9
Asynch/Synch Mapping	The MXP_2.5G_10E can perform standard ODU multiplexing according to ITU-T G.709. The card uses this to aggregate the four OC-48 client signals.	• ODU Multiplex

Table 10-35 describes the values on the Provisioning > OTN > OTN G.709 Thresholds tab.

Table 10-35 MXP_2.5G_10G or MXP_2.5G_10E Muxponder Card G.709 Threshold Settings

Parameter	Description	Options
Port	Display only. Port number	5
ES	Errored seconds	Numeric. Can be set for Near End or Far End, for 15-minute or one-day intervals, or for SM (OTUk) or PM (ODUk). Select a bullet and click **Refresh**.
SES	Severely errored seconds. Two types of thresholds can be asserted. Selecting the SM (OTUk) radio button selects FEC and overhead management and performance monitoring using OTUk. Selecting the PM radio button selects path performance monitoring using ODUk.	Numeric. Can be set for Near End or Far End, for 15-minute or one-day intervals, or for SM (OTUk) or PM (ODUk). Select a bullet and click **Refresh**.
UAS	Unavailable seconds	Numeric. Can be set for Near End or Far End, for 15-minute or one-day intervals, or for SM (OTUk) or PM (ODUk). Select a bullet and click **Refresh**.
BBE	Background block errors	Numeric. Can be set for Near End or Far End, for 15-minute or one-day intervals, or for SM (OTUk) or PM (ODUk). Select a bullet and click **Refresh**.
FC	Failure counter	Numeric. Can be set for Near End or Far End, for 15-minute or one-day intervals, or for SM (OTUk) or PM (ODUk). Select a bullet and click **Refresh**.

Table 10-36 describes the values on the Provisioning > OTN > FEC Thresholds tab.

Table 10-36 MXP_2.5G_10G or MXP_2.5G_10E Muxponder Card FEC Threshold Settings

Parameter	Description	Options
Port	Display only. Displays the port number.	5
Bit Errors Corrected	Displays the number of bit errors corrected during the interval selected. The interval can be set for 15 minutes or one day.	Numeric
Uncorrectable Words	Displays the number of uncorrectable words during the interval selected. The interval can be set for 15 minutes or one day.	Numeric

Table 10-37 describes the values on the Provisioning > OTN > Trail Trace Identifier tab.

Table 10-37 MXP_2.5G_10G or MXP_2.5G_10E Muxponder Card Trail Trace Identifier Settings

Parameter	Description	Options
Port	Sets the port number. The trail trace identifier is applicable only to the trunk interface, which handles G.709 frames.	• 5
Level	Sets the level.	• Section • Path
Trace Mode	Sets the trace mode.	• Off/None • Manual
Transmit	Displays the current transmit string; sets a new transmit string.	String of trace string size; trail trace identifier is 64 bytes in length.
Expected	Displays the current expected string; sets a new expected string.	String of trace string size
Received	Display only. Displays the current received string. You can press the Refresh button to manually refresh this display, or select the Auto-refresh every 5 sec box to keep this panel updated.	String of trace string size

Step 4 Click **Apply**.

Step 5 Return to your originating procedure (NTP).

NTP-G98 Modify Line Settings and PM Parameter Thresholds for TXP_MR_2.5G and TXPP_MR_2.5G Cards

Purpose	This procedure changes the line and threshold settings for TXP_MR_2.5G and TXPP_MR_2.5G transponder cards.
Tools/Equipment	None
Prerequisite Procedures	NTP-G32 Install the Transponder and Muxponder Cards, page 3-30 DLP-G63 Install an SFP, page 3-32 NTP-G94 Provision Pluggable Port Modules, page 10-29
Required/As Needed	As needed
Onsite/Remote	Onsite or remote
Security Level	Provisioning or higher

Step 1 Complete the "DLP-G46 Log into CTC" task on page 2-25 at the node where you want to change the transponder card settings. If you are already logged in, proceed to Step 2.

Step 2 Complete the "NTP-G103 Back Up the Database" procedure on page 11-2.

Step 3 Perform any of the following tasks as needed:

- DLP-G229 Change Card Settings for TXP_MR_2.5G and TXPP_MR_2.5G Cards, page 10-55
- DLP-G230 Change Line Settings for TXP_MR_2.5G and TXPP_MR_2.5G Cards, page 10-57
- DLP-G231 Change Section Trace Settings for TXP_MR_2.5G and TXPP_MR_2.5G Cards, page 10-58
- DLP-G232 Change Line Threshold Settings for TXP_MR_2.5G and TXPP_MR_2.5G Cards, page 10-59
- DLP-G233 Change Optical Thresholds Settings for TXP_MR_2.5G and TXPP_MR_2.5G Cards, page 10-61
- DLP-G234 Change OTN Settings for TXP_MR_2.5G and TXPP_MR_2.5G Cards, page 10-62

Step 4 Complete the "NTP-G103 Back Up the Database" procedure on page 11-2.

Stop. You have completed this procedure.

DLP-G229 Change Card Settings for TXP_MR_2.5G and TXPP_MR_2.5G Cards

Purpose	This task changes the card settings for TXP_MR_2.5G and TXPP_MR_2.5G transponder cards.
Tools/Equipment	None
Prerequisite Procedures	DLP-G46 Log into CTC, page 2-25
Required/As Needed	As needed
Onsite/Remote	Onsite or remote
Security Level	Provisioning or higher

Step 1 In node view, double-click the TXP_MR_2.5G or TXPP_MR_2.5G card where you want to change the card settings.

Step 2 Click the **Provisioning > Card** tabs.

Step 3 Modify any of the settings described in Table 10-38.

Table 10-38 TXP_MR_2.5G and TXPP_MR_2.5G Transponder Card Settings

Parameter	Description	Options
Termination Mode	Sets the mode of operation (option only supported for SONET/SDH payloads). See "14.12 Transponder and Muxponder Termination Modes" section on page 14-122 for more information.	• Transparent • Section • Line
Wavelength	Sets the wavelength of the DWDM side optical transmitter.	• First Tunable Wavelength • Further wavelengths in 100-GHz ITU spacing • Supported wavelengths are in white and marked by asterisks (**); unsupported wavelengths are gray. **Note** The four available wavelengths are listed in the Card Parameters section of the window.
Regeneration Peer Slot	Sets the regeneration peer slot.	• None • 1 • 2 • 3 • 4 • 5 • 6 • 12 • 13 • 14 • 15 • 16 • 17
Regeneration Group Name	Sets the regeneration peer group name.	User defined.

Step 4 Click **Apply**.

Step 5 Return to your originating procedure (NTP).

DLP-G230 Change Line Settings for TXP_MR_2.5G and TXPP_MR_2.5G Cards

Purpose	This task changes the line settings for TXP_MR_2.5G and TXPP_MR_2.5G transponder cards.
Tools/Equipment	None
Prerequisite Procedures	DLP-G46 Log into CTC, page 2-25
Required/As Needed	As needed
Onsite/Remote	Onsite or remote
Security Level	Provisioning or higher

Step 1 In node view, double-click the TXP_MR_2.5G or TXPP_MR_2.5G card where you want to change the line settings.

Step 2 Click the **Provisioning > Line >** tab and any additional PPM tabs (OC12, OC48, and so on). Tabs and parameter selections vary according to PPM provisioning.

Step 3 Modify any of the settings described in Table 10-39.

Table 10-39 TXP_MR_2.5G and TXPP_MR_2.5G Transponder Card Line Settings

Parameter	Description	Options
Port #	Display only. Displays the port number.	• 1 • 2 • 3 (TXPP_MR_2.5G card only)
Port Name	The user can assign a logical name for each of the ports shown by filling in this field.	User-defined. Name can be up to 32 alphanumeric/special characters. Blank by default. See the "DLP-G104 Assign a Name to a Port" task on page 6-8.
Admin State	Sets the port service state unless network conditions prevent the change. For more information about administrative states, see Appendix C, "DWDM Enhanced State Model."	• IS/Unlocked • IS,AINS/Unlocked,automaticInService • OOS,DSBLD/Locked,disabled • OOS,MT/Locked,maintenance
Service State	Identifies the autonomously generated state that gives the overall condition of the port. Service states appear in the format: Primary State-Primary State Qualifier, Secondary State. For more information about service states, see Appendix C, "DWDM Enhanced State Model."	• IS-NR/Unlocked-enabled • OOS-AU,AINS/Unlocked-disabled, automaticInService • OOS-MA,DSBLD/Locked-enabled,disabled • OOS-MA,MT/Locked-enabled,maintenance
ALS Mode	Sets the automatic laser shutdown function.	• Disabled • Auto Restart • Manual Restart • Manual Restart for Test

Table 10-39 TXP_MR_2.5G and TXPP_MR_2.5G Transponder Card Line Settings (continued)

Parameter	Description	Options
SF BER	(OC-N and STM-N payloads only.) Sets the signal fail bit error rate.	• 1E-3 • 1E-4 • 1E-5
SD BER	(OC-N and STM-N payloads only.) Sets the signal degrade bit error rat.	• 1E-5 • 1E-6 • 1E-7 • 1E-8 • 1E-9
AINS Soak	(OC-N and STM-N payloads only.) Sets the automatic in-service soak period.	• Duration of valid input signal, in hh.mm format, after which the card becomes in service (IS) automatically • 0 to 48 hours, 15-minute increments
Type	The optical transport type.	• SONET • SDH

Step 4 Click **Apply**.

Step 5 Return to your originating procedure (NTP).

DLP-G231 Change Section Trace Settings for TXP_MR_2.5G and TXPP_MR_2.5G Cards

Purpose	This task changes the section trace settings for TXP_MR_2.5G and TXPP_MR_2.5G transponder cards.
Tools/Equipment	None
Prerequisite Procedures	DLP-G46 Log into CTC, page 2-25
Required/As Needed	As needed
Onsite/Remote	Onsite or remote
Security Level	Provisioning or higher

Step 1 In node view, double-click the TXP_MR_2.5G or TXPP_MR_2.5G card where you want to change the section trace settings.

Step 2 Click the **Provisioning > Line > Section Trace** tab.

Step 3 Modify any of the settings described in Table 10-40.

Table 10-40 TXP_MR_2.5G and TXPP_MR_2.5G Transponder Card Section Trace Settings

Parameter	Description	Options
Port	Sets the port number.	• 1 • 2 • 3 (TXPP_MR_2.5G only)
Trace Mode	Sets the trace mode.	• Off/None • Manual
Section Trace String Size	Sets the trace string size.	• 1 byte • 16 byte
Transmit	Displays the current transmit string; sets a new transmit string.	String of trace string size
Expected	Displays the current expected string; sets a new expected string.	String of trace string size
Received	Display only. Displays the current received string.	String of trace string size

Step 4 Click **Apply**.

Step 5 Return to your originating procedure (NTP).

DLP-G232 Change Line Threshold Settings for TXP_MR_2.5G and TXPP_MR_2.5G Cards

Purpose	This task changes the line threshold settings for TXP_MR_2.5G and TXPP_MR_2.5G transponder cards.
Tools/Equipment	None
Prerequisite Procedures	DLP-G46 Log into CTC, page 2-25
Required/As Needed	As needed
Onsite/Remote	Onsite or remote
Security Level	Provisioning or higher

Step 1 In node view, double-click the TXP_MR_2.5G or TXPP_MR_2.5G card where you want to change the line threshold settings.

Step 2 Click the **Provisioning > Line Thresholds** tabs.

Step 3 Modify any of the settings as follows:

- For OC-3/STM-1, OC-12/STM-4, and OC-48/STM-16 payloads, see Table 10-41.
- For 1G Ethernet, 1G, and 2G Fiber Channel/FICON payloads, see Table 10-42.

Table 10-41 TXP_MR_2.5G and TXPP_MR_2.5G Transponder Card Line Thresholds Settings for OC-3/STM-1, OC-12/STM-4, and OC-48/STM-16 Payloads

Parameter	Description	Options
Port	Display only. Port number	• 1 • 2 • 3 (TXPP_MR_2.5G card only)
CV	Coding violations	Numeric. Can be set for Near End or Far End, for 15-minute or one-day intervals, or for Line (Far End only), Section, or Path. Select the bullet and click **Refresh**.
ES	Errored seconds	Numeric. Can be set for Near End or Far End, for 15-minute or one-day intervals, or for Line (Far End only), Section, or Path. Select the bullet and click **Refresh**.
SES	Severely errored seconds	Numeric. Can be set for Near End or Far End, for 15-minute or one-day intervals, or for Line (Far End only), Section, or Path. Select the bullet and click **Refresh**.
SEFS	(Section only.) Severely errored framing seconds	Numeric. Can be set for Far End, for 15-minute or one-day intervals for Section only. Select the bullet and click **Refresh**.
FC	(Line only.) Failure count	Numeric. Can be set for Near End or Far End, for 15-minute or one-day intervals for Line only. Select the bullet and click **Refresh**.
UAS	(Line only.) Unavailable seconds	Numeric. Can be set for Near End or Far End, for 15-minute or one-day intervals, for Line only. Select the bullet and click **Refresh**.

Table 10-42 TXP_MR_2.5G and TXPP_MR_2.5G Transponder Card Line Thresholds Settings for 1G Ethernet, 1G, and Fiber Channel/FICON Payloads

Parameter	Description	Options
Port	Display only. Port number	• 1 • 2 • 3 (TXPP_MR_2.5G card only)
Valid Packets	(Line only.) Number of valid packets	Numeric. Can be set for Near End or Far End, for 15-minute or one-day intervals, for Line only. Select the bullet and click **Refresh**.

Table 10-42 TXP_MR_2.5G and TXPP_MR_2.5G Transponder Card Line Thresholds Settings for 1G Ethernet, 1G, and Fiber Channel/FICON Payloads (continued)

Parameter	Description	Options
Invalid Packets	(Line only.) Number of invalid packets	Numeric. Can be set for Near End or Far End, for 15-minute or one-day intervals, for Line only. Select the bullet and click **Refresh**.
Code Group Violations	(Line only.) Number of code group violations	Numeric. Can be set for Near End or Far End, for 15-minute or one-day intervals, for Line only. Select the bullet and click **Refresh**.
Idle Ordered Sets	(Line only.) Number of idle ordered sets	Numeric. Can be set for Near End or Far End, for 15-minute or one-day intervals, for Line only. Select the bullet and click **Refresh**.
Non Idle Ordered Sets	(Line only.) Number of non-idle ordered sets	Numeric. Can be set for Near End or Far End, for 15-minute or one-day intervals, for Line only. Select the bullet and click **Refresh**.
Data Code Groups	(Line only.) Number of data code groups (excluding ordered sets)	Numeric. Can be set for Near End or Far End, for 15-minute or one-day intervals, for Line only. Select the bullet and click **Refresh**.

Step 4 Click **Apply**.

Step 5 Return to your originating procedure (NTP).

DLP-G233 Change Optical Thresholds Settings for TXP_MR_2.5G and TXPP_MR_2.5G Cards

Purpose	This task changes the optical threshold settings for TXP_MR_2.5G and TXPP_MR_2.5G transponder cards.
Tools/Equipment	None
Prerequisite Procedures	DLP-G46 Log into CTC, page 2-25
Required/As Needed	As needed
Onsite/Remote	Onsite or remote
Security Level	Provisioning or higher

Step 1 In node view, double-click the TXP_MR_2.5G or TXPP_MR_2.5G card where you want to change the optical threshold settings.

Step 2 Click the **Provisioning > Optics Thresholds** tabs.

Step 3 Modify any of the settings described in Table 10-43.

Table 10-43 TXP_MR_2.5G and TXPP_MR_2.5G Transponder Card Optics Thresholds Settings

Parameter	Description	Options
Port	Display only. Displays the port number.	• 1 • 2 • 3 (TXPP_MR_2.5G only)
Laser Bias Low (%)	Sets the warning threshold for low laser bias current.	Numeric, in percent Range 0 to 100 (client side) Range 0 to 100 (trunk side)
RX Power High (dBm)	Sets the warning threshold for high receiver input power.	Numeric, in dBm Range –40.0 to +30.0 (client side) Range –40.0 to +30.0 (trunk side)
RX Power Low (dBm)	Sets the warning threshold for low receiver input power.	Numeric, in dBm Range –40.0 to +30.0 (client side) Range –40.0 to +30.0 (trunk side)
TX Power High (dBm)	Sets the warning threshold for high transmitter output power.	Numeric, in dBm Range –40.0 to +30.0 (client side) Not applicable (trunk side)
TX Power Low (dBm)	Sets the warning threshold for low transmitter output power.	Numeric, in dBm Range –40.0 to +30.0 (client side) Not applicable (trunk side)

Step 4 Click **Apply**.

Step 5 Click the **Alarm** radio button and click **Refresh**.

Step 6 Click **Apply**.

Step 7 Return to your originating procedure (NTP).

DLP-G234 Change OTN Settings for TXP_MR_2.5G and TXPP_MR_2.5G Cards

Purpose	This task changes the OTN settings for TXP_MR_2.5G and TXPP_MR_2.5G transponder cards.
Tools/Equipment	None
Prerequisite Procedures	DLP-G46 Log into CTC, page 2-25
Required/As Needed	As needed
Onsite/Remote	Onsite or remote
Security Level	Provisioning or higher

Step 1 In node view, double-click the TXP_MR_2.5G or TXPP_MR_2.5G card where you want to change the OTN settings.

Step 2 Click one of the **Provisioning > OTN** tabs (OTN Lines, G.709 Thresholds, FEC Thresholds, or Trail Trace Identifier tab).

Step 3 Modify any of the settings described in Tables 10-44 through 10-47.

Table 10-44 describes the values on the Provisioning > OTN > OTN Lines tab.

Table 10-44 TXP_MR_2.5G and TXPP_MR_2.5G Transponder Card OTN Line Settings

Parameter	Description	Options
Port #	Display only. Displays the port number.	2
G.709 OTN	Sets the OTN lines according to ITU-T G.709.	• Enabled • Disabled
FEC	Sets the OTN lines to FEC.	• Enabled • Disabled
SF BER	Sets the signal fail bit error rate.	• 1E-5
SD BER	Sets the signal degrade bit error rate.	• 1E-5 • 1E-6 • 1E-7 • 1E-8 • 1E-9

Table 10-45 describes the values on the Provisioning > OTN > G.709 Thresholds tab.

Table 10-45 TXP_MR_2.5G and TXPP_MR_2.5G Transponder Card ITU-T G.709 Threshold Settings

Parameter	Description	Options
Port[1]	Display only. Port number	2
ES	Errored seconds	Numeric. Can be set for Near End or Far End, for 15-minute or one-day intervals, or for SM (OTUk) or PM (ODUk). Select a bullet and click **Refresh**.
SES	Severely errored seconds	Numeric. Can be set for Near End or Far End, for 15-minute or one-day intervals, or for SM (OTUk) or PM (ODUk). Select a bullet and click **Refresh**.
UAS	Unavailable seconds	Numeric. Can be set for Near End or Far End, for 15-minute or one-day intervals, or for SM (OTUk) or PM (ODUk). Select a bullet and click **Refresh**.
BBE	Background block errors	Numeric. Can be set for Near End or Far End, for 15-minute or one-day intervals, or for SM (OTUk) or PM (ODUk). Select a bullet and click **Refresh**.
FC	Failure counter	Numeric. Can be set for Near End or Far End, for 15-minute or one-day intervals, or for SM (OTUk) or PM (ODUk). Select a bullet and click **Refresh**.

1. Latency for 1G-FC payload without ITU-T G.709 is 4 microseconds, with ITU-T G.709 is 40 microseconds. Latency for 2G-FC payload without ITU-T G.709 is 2 microseconds, with ITU-T G.709 is 20 microseconds. Consider these values when planning a FC network that is sensitive to latency.

Table 10-46 describes the values on the Provisioning > OTN > FEC Threshold tab.

Table 10-46 TXP_MR_2.5G and TXPP_MR_2.5G Transponder Card FEC Threshold Settings

Parameter	Description	Options
Port	Display only. Displays the port number.	2
Bit Errors Corrected	Sets the value for bit errors corrected.	Numeric. Can be set for 15-minute or one-day intervals.
Uncorrectable Words	Sets the value for uncorrectable words.	Numeric. Can be set for 15-minute or one-day intervals.

Table 10-47 describes the values on the Provisioning > OTN > Trail Trace Identifier tab.

Table 10-47 TXP_MR_2.5G and TXPP_MR_2.5G Transponder Card Trail Trace Identifier Settings

Parameter	Description	Options
Level	Sets the level.	• Section • Path
Trace Mode	Sets the trace mode.	• Off/None • Manual
Transmit	Displays the current transmit string; sets a new transmit string.	String of trace string size; trail trace identifier is 64 bytes in length.
Expected	Displays the current expected string; sets a new expected string.	String of trace string size
Received	Display only. Displays the current received string.	String of trace string size

Step 4 Click **Apply**.

Step 5 Return to your originating procedure (NTP).

NTP-G99 Modify Line Settings and PM Parameter Thresholds for MXP_MR_2.5G and MXPP_MR_2.5G Cards

Purpose	This procedure changes the line and threshold settings for MXP_MR_2.5G and MXPP_MR_2.5G muxponder cards.
Tools/Equipment	None
Prerequisite Procedures	NTP-G32 Install the Transponder and Muxponder Cards, page 3-30 DLP-G63 Install an SFP, page 3-32 NTP-G94 Provision Pluggable Port Modules, page 10-29
Required/As Needed	As needed
Onsite/Remote	Onsite or remote
Security Level	Provisioning or higher

Step 1 Complete the "DLP-G46 Log into CTC" task on page 2-25 at the node where you want to change the muxponder card settings. If you are already logged in, proceed to Step 2.

Step 2 Complete the "NTP-G103 Back Up the Database" procedure on page 11-2.

Step 3 Perform any of the following tasks as needed:

- DLP-G235 Change Card Settings for MXP_MR_2.5G and MXPP_MR_2.5G Cards, page 10-66
- DLP-G236 Change Line Settings for MXP_MR_2.5G and MXPP_MR_2.5G Cards, page 10-67
- DLP-G237 Change Distance Extension Settings for MXP_MR_2.5G and MXPP_MR_2.5G Cards, page 10-69
- DLP-G238 Change OC48 Settings for MXP_MR_2.5G and MXPP_MR_2.5G Cards, page 10-70
- DLP-G239 Change Section Trace Settings for MXP_MR_2.5G and MXPP_MR_2.5G Cards, page 10-72
- DLP-G240 Change Line Threshold Settings for MXP_MR_2.5G and MXPP_MR_2.5G Cards, page 10-73
- DLP-G241 Change Optical Thresholds Settings for MXP_MR_2.5G and MXPP_MR_2.5G Cards, page 10-75

Note To use the Alarm Profiles tab, including creating alarm profiles and suppressing alarms, see Chapter 7, "Manage Alarms."

Step 4 Complete the "NTP-G103 Back Up the Database" procedure on page 11-2.

Stop. You have completed this procedure.

DLP-G235 Change Card Settings for MXP_MR_2.5G and MXPP_MR_2.5G Cards

Purpose	This task changes the card settings for MXP_MR_2.5G and MXPP_MR_2.5G muxponder cards.
Tools/Equipment	None
Prerequisite Procedures	DLP-G46 Log into CTC, page 2-25
Required/As Needed	As needed
Onsite/Remote	Onsite or remote
Security Level	Provisioning or higher

Note Card settings can be changed only if the facilities are out-of-service (OOS).

Step 1 In node view, double-click the MXP_MR_2.5G or MXPP_MR_2.5G card where you want to change the card settings.

Step 2 Click the **Provisioning > Card** tabs.

Step 3 Modify any of the settings described in Table 10-48.

Table 10-48 MXP_MR_2.5G and MXPP_MR_2.5G Muxponder Card Settings

Parameter	Description	Options
Card Mode	Sets the mode of operation (option only supported for SONET/SDH payloads). Note: this setting is not currently supported. The only option available currently is FC-GE.	• FC-GE
Wavelength	Sets the wavelength of the DWDM side optical transmitter.	• First Tunable Wavelength • Further wavelengths in 100-GHz ITU spacing • Supported wavelengths are in white and marked by asterisks (**); unsupported wavelengths are gray. **Note** The four available wavelengths are listed in the Card Parameters section of the window.

Step 4 Click **Apply**.

Step 5 Return to your originating procedure (NTP).

DLP-G236 Change Line Settings for MXP_MR_2.5G and MXPP_MR_2.5G Cards

Purpose	This task changes the line settings for MXP_MR_2.5G and MXPP_MR_2.5G muxponder cards.
Tools/Equipment	None
Prerequisite Procedures	DLP-G46 Log into CTC, page 2-25
Required/As Needed	As needed
Onsite/Remote	Onsite or remote
Security Level	Provisioning or higher

Step 1 In node view, double-click the MXP_MR_2.5G or MXPP_MR_2.5G card where you want to change the line settings.

Step 2 Click the **Provisioning > Line >** tab and any additional tabs (Client, Distance Extension, OC48, Section Trace, and so on). Tabs and parameter selections vary according to PPM provisioning.

Step 3 Modify any of the settings for the Client tab as described in Table 10-49.

Table 10-49 MXP_MR_2.5G and MXPP_MR_2.5G Muxponder Card Line Client Tab Settings

Parameter	Description	Options
Port #	Display only. Displays the port number.	• 1 • 2 • 3 • 4 • 5 • 6 • 7 • 8 • 9 (trunk for MXP_MR_2.5G) or 9-10 (trunk for MXPP_MR_2.5G)
Port Name	The user can assign a logical name for each of the ports shown by filling in this field.	User-defined. Name can be up to 32 alphanumeric/special characters. Blank by default. See the "DLP-G104 Assign a Name to a Port" task on page 6-8.
Admin State	Sets the port service state unless network conditions prevent the change. For more information about administrative states, see Appendix C, "DWDM Enhanced State Model."	• IS/Unlocked • IS,AINS/Unlocked,automaticInService • OOS,DSBLD/Locked,disabled • OOS,MT/Locked,maintenance

Table 10-49 MXP_MR_2.5G and MXPP_MR_2.5G Muxponder Card Line Client Tab Settings (continued)

Parameter	Description	Options
Service State	Identifies the autonomously generated state that gives the overall condition of the port. Service states appear in the format: Primary State-Primary State Qualifier, Secondary State. For more information about service states, see Appendix C, "DWDM Enhanced State Model."	• IS-NR/Unlocked-enabled • OOS-AU,AINS/Unlocked-disabled, automaticInService • OOS-MA,DSBLD/Locked-enabled,disabled • OOS-MA,MT/Locked-enabled,maintenance
ALS Mode	Sets the automatic laser shutdown function.	• Disabled • Auto Restart • Manual Restart • Manual Restart for Test
SF BER[1]	(OC-N and STM-N payloads only.) Sets the signal fail bit error rate threshold.	• 1E-3 • 1E-4 • 1E-5
SD BER[1]	(OC-N and STM-N payloads only.) Sets the signal degrade bit error rate threshold.	• 1E-5 • 1E-6 • 1E-7 • 1E-8 • 1E-9
AINS Soak	(OC-N and STM-N payloads only.) Sets the automatic in-service soak period.	• Duration of valid input signal, in hh.mm format, after which the card becomes in service (IS) automatically • 0 to 48 hours, 15-minute increments
Type	The optical transport type	• SONET • SDH

1. BER and SD thresholds apply only to trunk ports (Port 9 for MXP_MR_2.5G and Ports 9-10 for MXPP_MR_2.5G).

Step 4 Click **Apply**.

Step 5 Return to your originating procedure (NTP).

DLP-G237 Change Distance Extension Settings for MXP_MR_2.5G and MXPP_MR_2.5G Cards

Purpose	This task changes the distance extension settings for MXP_MR_2.5G and MXPP_MR_2.5G muxponder cards.
Tools/Equipment	None
Prerequisite Procedures	DLP-G46 Log into CTC, page 2-25
Required/As Needed	As needed
Onsite/Remote	Onsite or remote
Security Level	Provisioning or higher

Note Distance extension settings can be changed only if the facilities are out-of-service (OOS).

Note The distance extension parameters only apply to client ports (1 to 8) and not to trunk ports (9 for MXP_MR_2.5G or 9 and 10 for MXPP_MR_2.5G).

Step 1 In node view, double-click the MXP_MR_2.5G or MXPP_MR_2.5G card where you want to change the distance extension settings.

Step 2 Click the **Provisioning > Line > Distance Extension** tab. Tabs and parameter selections vary according to PPM provisioning.

Step 3 Modify any of the settings for the Distance Extension tab as described in Table 10-50.

Table 10-50 MXP_MR_2.5G and MXPP_MR_2.5G Muxponder Card Line Distance Extension Settings

Parameter	Description	Options
Port #	Display only. Displays the port number.	• 1 • 2 • 3 • 4 • 5 • 6 • 7 • 8 • 9 (trunk for MXP_MR_2.5G) or 9-10 (trunk for MXPP_MR_2.5G)
Enable Distance Extension	Allows end-to-end distances of up to 1600 km for 1GFC and up to 800 km for 2GFC.	Checked or unchecked
Auto Detect Credits	Allows automatic detection of buffer credits for FC flow control.	Checked or unchecked

Table 10-50 MXP_MR_2.5G and MXPP_MR_2.5G Muxponder Card Line Distance Extension Settings

Parameter	Description	Options
Credits Available	Display only. Displays the number of buffer credits available.	• Numeric (range depends on the client equipment attached to the card)
Autothreshold GFP Buffers	This parameter allows the threshold of the GFP buffer between two MXP_MR_2.5G or two MXPP_MR_2.5G cards to be automatically adjust ed.	Checked or unchecked
GFP Buffers Available	Displays the number of GFP buffers available between two MXP_MR_2.5G or two MXPP_MR_2.5G cards.	• Numeric

Step 4 Click **Apply**.

Step 5 Return to your originating procedure (NTP).

DLP-G238 Change OC48 Settings for MXP_MR_2.5G and MXPP_MR_2.5G Cards

Purpose	This task changes the OC48 settings for MXP_MR_2.5G and MXPP_MR_2.5G muxponder cards.
Tools/Equipment	None
Prerequisite Procedures	DLP-G46 Log into CTC, page 2-25
Required/As Needed	As needed
Onsite/Remote	Onsite or remote
Security Level	Provisioning or higher

Note OC48 settings apply only to the trunk ports (9 for MXP_MR_2.5G and 9 and 10 for MXPP_MR_2.5G)

Step 1 In node view, double-click the MXP_MR_2.5G or MXPP_MR_2.5G card where you want to change the OC48 settings.

Step 2 Click the **Provisioning > Line > OC48** tab. Tabs and parameter selections vary according to PPM provisioning.

Step 3 Modify any of the settings for the OC48 Extension tab as described in Table 10-51.

Table 10-51 MXP_MR_2.5G and MXPP_MR_2.5G Muxponder Card Line OC48 Tab Settings

Parameter	Description	Options
Port #	Display only. Displays the port number.	• 1 • 2 • 3 • 4 • 5 • 6 • 7 • 8 • 9 (trunk for MXP_MR_2.5G) or 9-10 (trunk for MXPP_MR_2.5G)
Port Name	Provides the ability to assign the specified port a name.	User-defined. Name can be up to 32 alphanumeric/special characters. Blank by default. See the "DLP-G104 Assign a Name to a Port" task on page 6-8.
Admin State	Sets the port service state unless network conditions prevent the change. For more information about administrative states, see Appendix C, "DWDM Enhanced State Model."	• IS/Unlocked • IS,AINS/Unlocked,automaticInService • OOS,DSBLD/Locked,disabled • OOS,MT/Locked,maintenance
Service State	Identifies the autonomously generated state that gives the overall condition of the port. Service states appear in the format: Primary State-Primary State Qualifier, Secondary State. For more information about service states, see Appendix C, "DWDM Enhanced State Model."	• IS-NR/Unlocked-enabled • OOS-AU,AINS/Unlocked-disabled, automaticInService • OOS-MA,DSBLD/Locked-enabled,disabled • OOS-MA,MT/Locked-enabled,maintenance
ALS Mode	Sets the automatic laser shutdown function mode. The DWDM transmitter supports ALS according to ITU-T G.644 (06/99). ALS can be disabled or be set for three mode options.	• Disable: ALS is off; the laser is not automatically shut down when traffic outages (LOS) occur. • Auto Restart: ALS is on; the laser automatically shuts down when traffic outages (LOS) occur. It automatically restarts when the conditions that caused the outage are resolved. • Manual Restart: ALS is on; the laser automatically shuts down when traffic outages (LOS) occur. However, the laser must be manually restarted when conditions that caused the outage are resolved. • Manual Restart for Test: Manually restarts the laser for testing.
SF BER[1]	Sets the signal fail bit error rate.	• 1E-3 • 1E-4 • 1E-5

Table 10-51 MXP_MR_2.5G and MXPP_MR_2.5G Muxponder Card Line OC48 Tab Settings (continued)

Parameter	Description	Options
SD BER[1]	Sets the signal degrade bit error rate.	• 1E-5 • 1E-6 • 1E-7 • 1E-8 • 1E-9
AINS Soak	Sets the automatic in-service soak period. Double click the time and use the up and down arrows to change settings.	• Duration of valid input signal, in hh.mm format, after which the card becomes in service (IS) automatically • 0 to 48 hours, 15-minute increments
Type	The optical transport type.	• SONET • SDH
ProvidesSync	Sets the ProvidesSync card parameter. If checked, the card is provisioned as a network element timing reference.	Checked or unchecked
SyncMsgIn	Sets the EnableSync card parameter. Enables synchronization status messages (S1 byte), which allow the node to choose the best timing source.	Checked or unchecked
Send DoNotUse	Sets the Send DoNotUse card state. When checked, sends a DUS (do not use) message on the S1 byte.	Checked or unchecked

1. BER and SD thresholds apply only to trunk ports (Port 9 for MXP_MR_2.5G and Ports 9 and 10 for MXPP_MR_2.5G).

Step 4 Click **Apply**.

Step 5 Return to your originating procedure (NTP).

DLP-G239 Change Section Trace Settings for MXP_MR_2.5G and MXPP_MR_2.5G Cards

Purpose	This task changes the section trace settings for MXP_MR_2.5G and MXPP_MR_2.5G muxponder cards.
Tools/Equipment	None
Prerequisite Procedures	DLP-G46 Log into CTC, page 2-25
Required/As Needed	As needed
Onsite/Remote	Onsite or remote
Security Level	Provisioning or higher

Step 1 In node view, double-click the MXP_MR_2.5G or MXPP_MR_2.5G card where you want to change the section trace settings.

Step 2 Click the **Provisioning > Line > Section Trace** tab. Tabs and parameter selections vary according to PPM provisioning.

Step 3 Modify any of the settings in the Section Trace tab as described in Table 10-52.

Table 10-52 MXP_MR_2.5G and MXPP_MR_2.5G Muxponder Card Line Section Trace Tab Settings

Parameter	Description	Options
Port	Sets the port number.	• 9 (trunk for MXP_MR_2.5G) or 9 and 10 (trunk for MXPP_MR_2.5G)
Trace Mode	Sets the trace mode.	• Off/None • Auto • Manual
Section Trace String Size	Sets the trace string size.	• 1 byte • 16 byte
Transmit	Displays the current transmit string; sets a new transmit string.	String of trace string size
Expected	Displays the current expected string; sets a new expected string.	String of trace string size
Received	Display only. Displays the current received string.	String of trace string size

Step 4 Click **Apply**.

Step 5 Return to your originating procedure (NTP).

DLP-G240 Change Line Threshold Settings for MXP_MR_2.5G and MXPP_MR_2.5G Cards

Purpose	This task changes the line threshold settings for MXP_MR_2.5G and MXPP_MR_2.5G muxponder cards.
Tools/Equipment	None
Prerequisite Procedures	DLP-G46 Log into CTC, page 2-25
Required/As Needed	As needed
Onsite/Remote	Onsite or remote
Security Level	Provisioning or higher

Step 1 In node view, double-click the MXP_MR_2.5G or MXPP_MR_2.5G card where you want to change the line threshold settings.

Step 2 Click the **Provisioning > Line Thresholds** tabs.

Step 3 Modify any of the settings as shown in Table 10-53.

Table 10-53 MXP_MR_2.5G and MXPP_MR_2.5G Muxponder Card Line Threshold Settings

RMON Thresholds[1]		
Index	Identifies the threshold.	Numeric
Slot/Port	Identifies the slot and port to which the threshold applies.	S*x*/P*x*, where *x* is a numeric value
Variable	The particular remote monitoring (RMON) count under consideration for the threshold definition.	A text mnemonic, for example: "gfpStatsRxSBitErrors"
Alarm Type	The direction for which the alarm is to activate.	• Rising • Falling
Sample Type	Whether the samples should be absolute or relative.	• Absolute • Relative
Sample Period	The number of seconds for which the RMON count for the variable is accumulated.	Numeric (seconds)
Rising Threshold	The rising threshold value.	Numeric
Falling Threshold	The falling threshold value.	Numeric
SONET Thresholds[2]		
Port	Display only. Port number.	• 9 (trunk for MXP_MR_2.5G) • 9-10 (trunk for MXPP_MR_2.5G)
CV	Coding violations.	Numeric. Can be set for Near End or Far End, for 15-minute or one-day intervals, or for Line (Far End only), Section, or Path. Select the bullet and click **Refresh**.
ES	Errored seconds.	Numeric. Can be set for Near End or Far End, for 15-minute or one-day intervals, or for Line (Far End only), Section, or Path. Select the bullet and click **Refresh**.
SES	Severely errored seconds.	Numeric. Can be set for Near End or Far End, for 15-minute or one-day intervals, or for Line (Far End only), Section, or Path. Select the bullet and click **Refresh**.
SEFS	(Section only.) Severely errored framing seconds.	Numeric. Can be set for Far End, for 15-minute or one-day intervals for Section only. Select the bullet and click **Refresh**.

Table 10-53 MXP_MR_2.5G and MXPP_MR_2.5G Muxponder Card Line Threshold Settings (continued)

RMON Thresholds[1]		
FC	(Line only.) Failure count.	Numeric. Can be set for Near End or Far End, for 15-minute or one-day intervals for Line only. Select the bullet and click **Refresh**.
UAS	(Line only.) Unavailable seconds.	Numeric. Can be set for Near End or Far End, for 15-minute or one-day intervals, for Line only. Select the bullet and click **Refresh**.

1. RMON thresholds apply to all data types. A PPM must be defined for the port to be able to define a line threshold. This only applies to client Ports 1 to 8 and GFP facilities (trunk Port 9 for MXP_MR_2.5G or trunk Ports 9 to 10 for MXPP_MR_2.5G).
2. SONET thresholds apply only to trunk ports (9 for MXP_MR_2.5G or 9 to 10 for MXPP_MR_2.5G).

Step 4 Click **Apply**.

Step 5 Return to your originating procedure (NTP).

DLP-G241 Change Optical Thresholds Settings for MXP_MR_2.5G and MXPP_MR_2.5G Cards

Purpose	This task changes the optical threshold settings for MXP_MR_2.5G and MXPP_MR_2.5G muxponder cards.
Tools/Equipment	None
Prerequisite Procedures	DLP-G46 Log into CTC, page 2-25
Required/As Needed	As needed
Onsite/Remote	Onsite or remote
Security Level	Provisioning or higher

Step 1 In node view, double-click the MXP_MR_2.5G or MXPP_MR_2.5G card where you want to change the optical threshold settings.

Step 2 Click the **Provisioning > Optics Thresholds** tabs.

Step 3 Modify any of the settings described in Table 10-43.

Table 10-54 MXP_MR_2.5G and MXPP_MR_2.5G Muxponder Card Optical Threshold Settings

Parameter	Description	Options
Port	Display only. Displays the port number.	• 1 • 2 • 3 • 4 • 5 • 6 • 7 • 8 • 9 (trunk for MXP_MR_2.5G) • 9-10 (trunk for MXPP_MR_2.5G)
Laser Bias Low (%)	Sets the warning threshold for low laser bias current.	Numeric, in percent Range 0 to 100 (client side) Range 0 to 100 (trunk side)
RX Power High (dBm)	Sets the warning threshold for high receiver input power.	Numeric, in dBm Range –40.0 to +30.0 (client side) Range –40.0 to +30.0 (trunk side)
RX Power Low (dBm)	Sets the warning threshold for low receiver input power.	Numeric, in dBm Range –40.0 to +30.0 (client side) Range –40.0 to +30.0 (trunk side)
TX Power High (dBm)	Sets the warning threshold for high transmitter output power.	Numeric, in dBm Range –40.0 to +30.0 (client side) Not applicable (trunk side)
TX Power Low (dBm)	Sets the warning threshold for low transmitter output power.	Numeric, in dBm Range –40.0 to +30.0 (client side) Not applicable (trunk side)

Step 4 Click **Apply**.

Step 5 Select the **TCA** (Threshold Crossing Alert) or **Alarm** radio button.

Step 6 Select a **15 Min** or **1 Day** performance monitoring interval radio button (available for TCA only), and then click **Refresh**.

Step 7 Return to your originating procedure (NTP).

NTP-G100 Modify Alarm Interface Controller Settings (ANSI Only)

Purpose	This procedure provisions the AIC card to receive input from, or send output to, external devices wired to the backplane (called external alarms and controls or environmental alarms) or to change orderwire settings. Note that the AIC card is not compatible with the ETSI shelf.
Tools/Equipment	None
Prerequisite Procedures	NTP-G71 Provision External Alarms and Controls on the Alarm Interface Controller Card, page 7-36 DLP-G109 Provision Orderwire, page 6-15
Required/As Needed	As needed
Onsite/Remote	Onsite or remote
Security Level	Provisioning or higher

Step 1 Complete the "DLP-G46 Log into CTC" task on page 2-25 at the node where you want to change the AIC card settings. If you are already logged in, proceed to Step 2.

Step 2 Complete the "NTP-G103 Back Up the Database" procedure on page 11-2.

Step 3 Perform any of the following tasks as needed:

- DLP-G242 Change External Alarms Using the AIC Card, page 10-77
- DLP-G243 Change External Controls Using the AIC Card, page 10-78
- DLP-G244 Change Orderwire Settings Using the AIC Card, page 10-79

Step 4 Complete the "NTP-G103 Back Up the Database" procedure on page 11-2.

Stop. You have completed this procedure.

DLP-G242 Change External Alarms Using the AIC Card

Purpose	This task changes external alarm settings on the AIC card. This task applies to ONS 15454 ANSI shelves only.
Tools/Equipment	None
Prerequisite Procedures	DLP-G46 Log into CTC, page 2-25
Required/As Needed	As needed
Onsite/Remote	Onsite or remote
Security Level	Provisioning or higher

Step 1 Confirm that external-device relays are wired to the ENVIR ALARMS IN backplane pins. See the "DLP-G23 Install Alarm Wires on the Backplane (ANSI Only)" task on page 1-53 for more information.

Step 2 In node view, double-click the AIC card to display it in card view.

Step 3 Click the **Provisioning > External Alarms** tabs.

Step 4 Modify any of the following fields for each external device wired to the ONS 15454 backplane. For definitions of these fields, see the "NTP-G71 Provision External Alarms and Controls on the Alarm Interface Controller Card" procedure on page 7-36.

- Enabled
- Alarm Type
- Severity
- Virtual Wire
- Raised When
- Description

Step 5 To provision additional devices, complete Step 4 for each additional device.

Step 6 Click **Apply**.

Step 7 Return to your originating procedure (NTP).

DLP-G243 Change External Controls Using the AIC Card

Purpose	This task changes external control settings on the AIC card. This task applies to ONS 15454 ANSI shelves only.
Tools/Equipment	None
Prerequisite Procedures	DLP-G46 Log into CTC, page 2-25
Required/As Needed	As needed
Onsite/Remote	Onsite or remote
Security Level	Provisioning or higher

Step 1 Verify the external control relays to the ENVIR ALARMS OUT backplane pins. See the "DLP-G23 Install Alarm Wires on the Backplane (ANSI Only)" task on page 1-53 for more information.

Step 2 In node view, double-click the AIC card to display it in card view.

Step 3 Click the **Provisioning > External Controls** tabs.

Step 4 Modify any of the following fields for each external control wired to the ONS 15454 backplane. For definitions of these fields, see the "NTP-G71 Provision External Alarms and Controls on the Alarm Interface Controller Card" procedure on page 7-36.

- Enabled
- Trigger Type
- Control Type
- Description

Step 5 To provision additional controls, complete Step 4 for each additional device.

Step 6 Click **Apply**.

Step 7 Return to your originating procedure (NTP).

DLP-G244 Change Orderwire Settings Using the AIC Card

Purpose	This task changes orderwire settings on the AIC card. This task applies to ONS 15454 ANSI shelves only.
Tools/Equipment	None
Prerequisite Procedures	DLP-G46 Log into CTC, page 2-25
Required/As Needed	As needed
Onsite/Remote	Onsite or remote
Security Level	Provisioning or higher

Caution When provisioning orderwire for ONS 15454s residing in a ring, do not provision a complete orderwire loop. For example, a four-node ring typically has east and west ports provisioned at all four nodes. However, to prevent orderwire loops, provision two orderwire ports (east and west) at all but one of the ring nodes.

Tip Before you begin, make a list of the ONS 15454 slots and ports that require orderwire communication.

Step 1 In node view, double-click the AIC card to display it in card view.

Step 2 Click the **Provisioning > Local Orderwire** tabs or **Provisioning > Express Orderwire** tabs, depending on the orderwire path that you want to create.

Step 3 If needed, adjust the transmit (Tx) and receive (Rx) decibel referred to one milliwatt (dBm) values by moving the slider to the right or left for the headset type (four-wire or two-wire) that you will use. In general, you should not need to adjust the dBm values.

Step 4 Click **Apply**.

Step 5 Return to your originating procedure (NTP).

NTP-G101 Modify Alarm Interface Controller–International Settings

Purpose	This procedure provisions the AIC-I card to receive input from or send output to external devices wired to the backplane (called external alarms and controls or environmental alarms), or to change orderwire settings.
Tools/Equipment	None
Prerequisite Procedures	NTP-G72 Provision External Alarms and Controls on the Alarm Interface Controller-International, page 7-38 DLP-G109 Provision Orderwire, page 6-15
Required/As Needed	As needed
Onsite/Remote	Onsite or remote
Security Level	Provisioning or higher

Step 1 Complete the "DLP-G46 Log into CTC" task on page 2-25 at the node where you want to change the AIC-I card settings. If you are already logged in, proceed to Step 2.

Step 2 Complete the "NTP-G103 Back Up the Database" procedure on page 11-2.

Step 3 Perform any of the following tasks as needed:

- DLP-G245 Change External Alarms Using the AIC-I Card, page 10-80
- DLP-G246 Change External Controls Using the AIC-I Card, page 10-81
- DLP-G247 Change AIC-I Card Orderwire Settings, page 10-82

Step 4 Complete the "NTP-G103 Back Up the Database" procedure on page 11-2.

Stop. You have completed this procedure.

DLP-G245 Change External Alarms Using the AIC-I Card

Purpose	This task changes external alarm settings on the AIC-I card.
Tools/Equipment	None
Prerequisite Procedures	DLP-G46 Log into CTC, page 2-25
Required/As Needed	As needed
Onsite/Remote	Onsite or remote
Security Level	Provisioning or higher

Note The procedure is the same if you are using the alarm expansion panel (AEP). In this case, the number of contacts that are shown on the screen is changed accordingly.

Step 1 Confirm that external-device relays are wired to the ENVIR ALARMS IN pins. See the "DLP-G20 Install Alarm Wires on the MIC-A/P (ETSI Only)" task on page 1-48 (ETSI) or "DLP-G23 Install Alarm Wires on the Backplane (ANSI Only)" task on page 1-53 (ANSI) for more information.

Step 2 Double-click the AIC-I card to display it in card view.

Step 3 Click the **Provisioning > External Alarms** tabs.

Step 4 Modify any of the following fields for each external device wired to the ONS 15454 backplane. For definitions of these fields, see the "NTP-G72 Provision External Alarms and Controls on the Alarm Interface Controller-International" procedure on page 7-38.

- Enabled
- Alarm Type
- Severity
- Virtual Wire
- Raised When
- Description

Step 5 To provision additional devices, complete Step 4 for each additional device.

Step 6 Click **Apply**.

Step 7 Return to your originating procedure (NTP).

DLP-G246 Change External Controls Using the AIC-I Card

Purpose	This task changes external control settings on the AIC-I card.
Tools/Equipment	None
Prerequisite Procedures	DLP-G46 Log into CTC, page 2-25
Required/As Needed	As needed
Onsite/Remote	Onsite or remote
Security Level	Provisioning or higher

Note The procedure is the same if you are using the AEP. In this case, the number of contacts that are shown on the screen is changed accordingly.

Step 1 Verify the external control relays to the ENVIR ALARMS OUT backplane pins. See the "DLP-G20 Install Alarm Wires on the MIC-A/P (ETSI Only)" task on page 1-48 (ETSI) or "DLP-G23 Install Alarm Wires on the Backplane (ANSI Only)" task on page 1-53 (ANSI) for more information.

Step 2 In node view, double-click the AIC-I card to display it in card view.

Step 3 On the External Controls subtab, modify any of the following fields for each external control wired to the ONS 15454 backplane. For definitions of these fields, see the "NTP-G72 Provision External Alarms and Controls on the Alarm Interface Controller-International" procedure on page 7-38.

- Enabled
- Trigger Type
- Control Type
- Description

Step 4 To provision additional controls, complete Step 3 for each additional device.

Step 5 Click **Apply**.

Step 6 Return to your originating procedure (NTP).

DLP-G247 Change AIC-I Card Orderwire Settings

Purpose	This task changes orderwire settings on the AIC-I card.
Tools/Equipment	None
Prerequisite Procedures	DLP-G46 Log into CTC, page 2-25
Required/As Needed	As needed
Onsite/Remote	Onsite or remote
Security Level	Provisioning or higher

Caution When provisioning orderwire for ONS 15454s residing in a ring, do not provision a complete orderwire loop. For example, a four-node ring typically has east and west ports provisioned at all four nodes. However, to prevent orderwire loops, provision two orderwire ports (east and west) at all but one of the ring nodes.

Tip Before you begin, make a list of the ONS 15454 slots and ports that require orderwire communication.

Step 1 In node view, double-click the AIC-I card to display it in card view.

Step 2 Click the **Provisioning > Local Orderwire** tabs or the **Provisioning > Express Orderwire** tabs, depending on the orderwire path that you want to change. Provisioning steps are the same for both types of orderwire.

Step 3 If needed, adjust the Tx and Rx dBm values by moving the slider to the right or left for the headset type (four-wire or two-wire) that you will use. In general, you should not need to adjust the dBm values.

Step 4 If you want to turn on the audible alert (buzzer) for the orderwire, check the **Buzzer On** check box.

Step 5 Click **Apply**.

Step 6 Return to your originating procedure (NTP).

NTP-G102 Change Card Service State

Purpose	This procedure changes card service state.
Tools/Equipment	None
Prerequisite Procedures	NTP-G30 Install the DWDM Cards, page 3-26 or NTP-G32 Install the Transponder and Muxponder Cards, page 3-30
Required/As Needed	As needed
Onsite/Remote	Onsite or remote
Security Level	Provisioning or higher

Step 1 Complete the "DLP-G46 Log into CTC" task on page 2-25 at the node where you want to change the card service state.

Step 2 Click the **Inventory** tab.

Step 3 Click **Admin State** for the card you want to change, and choose an Admin state from the drop-down list:

- **IS** (In-Service [ANSI]) or **Unlocked** (ETSI)
- **OOS,MT** (Out-of-Service,Maintenance [ANSI]) or **Locked-enabled** (ETSI)

Step 4 Click **Apply**.

Step 5 If an error message appears indicating that the card state cannot be changed from its current state, click **OK**.

For information about the enhanced state model and card state transitions, refer to the "DWDM Enhanced State Model" section on page C-1.

Stop. You have completed this procedure.

Maintain the Node

This chapter provides procedures for maintaining the Cisco ONS 15454, including database backups and restoration, removing and replacing cards, viewing the ONS 15454 audit trail, and hardware maintenance procedures such as cleaning fibers, changing the fan tray filter, and other maintenance procedures.

Note Unless otherwise specified, "ONS 15454" refers to both ANSI and ETSI shelf assemblies.

Before You Begin

Before performing any of the following procedures, investigate all alarms and clear any trouble conditions. Refer to the *Cisco ONS 15454 SONET and DWDM Troubleshooting Guide* as necessary for general troubleshooting information and alarm or error descriptions.

This section lists the chapter procedures (NTPs). Turn to a procedure to view its tasks (DLPs).

1. NTP-G103 Back Up the Database, page 11-2—Complete as needed.
2. NTP-G104 Restore the Database, page 11-3—Complete as needed.
3. NTP-G105 Restore the Node to Factory Configuration, page 11-5—Complete as needed to clear the database and upload a blank database and the latest software.
4. NTP-G106 Reset Cards Using CTC, page 11-10—Complete as needed to reset the Advanced Timing, Communications, and Control (TCC2) and dense wavelength division multiplexing (DWDM) cards.
5. NTP-G107 Remove and Replace DWDM Cards, page 11-12—Complete as needed
6. NTP-G108 Viewing the Audit Trail Records, page 11-19—Complete as needed.
7. NTP-G109 Off-Load the Audit Trail Record, page 11-21—Complete as needed.
8. NTP-G110 Off-Load the Diagnostics File, page 11-22—Complete as needed.
9. NTP-G111 Revert to an Earlier Software Load, page 11-22—Complete as needed.
10. NTP-G112 Change the Node Timing Reference, page 11-24—Complete as needed.
11. NTP-G113 View the ONS 15454 Timing Report, page 11-25—Complete as needed.
12. NTP-G114 Inspect, Clean, and Replace the Air Filter, page 11-29—Complete as needed.
13. NTP-G115 Clean Fiber Connectors, page 11-32—Complete as needed.
14. NTP-G116 Replace the Fan-Tray Assembly, page 11-35—Complete as needed.

15. NTP-G117 Replace the ANSI Shelf Alarm Interface Panel, page 11-40—Complete as needed.
16. NTP-G118 Replace the ANSI Shelf Plastic Lower Backplane Cover, page 11-44—Complete as needed.

NTP-G103 Back Up the Database

Purpose	This procedure stores a backup version of the TCC2 (software) database on the workstation running Cisco Transport Controller (CTC) or on a network server.
Tools/Equipment	None
Prerequisite Procedures	None
Required/As Needed	Required. Cisco recommends performing a database backup at approximately weekly intervals and prior to and after configuration changes.
Onsite/Remote	Onsite or remote
Security Level	Maintenance

Note You must back up and restore the database for each node on a circuit path in order to maintain a complete circuit.

Note The following parameters are not backed up and restored: node name, IP address, subnet mask and gateway, and Internet Inter-ORB Protocol (IIOP) port. If you change the node name and then restore a backed up database with a different node name, the circuits map to the new node name. Cisco recommends keeping a record of the old and new node names.

Step 1 Complete the "DLP-G46 Log into CTC" task on page 2-25 at the node you want to back up. If you are already logged in, continue with Step 2.

Step 2 Click the **Maintenance > Database** tabs.

Step 3 Click **Backup**.

Step 4 Save the database on the workstation's hard drive or on network storage. Use an appropriate file name with the db file extension; for example, database.db.

Step 5 Click **Save**.

Step 6 Click **OK** in the confirmation dialog box.

Stop. You have completed this procedure.

NTP-G104 Restore the Database

Purpose	This procedure restores the TCC2 software database.
Tools/Equipment	None
Prerequisite Procedures	NTP-G103 Back Up the Database, page 11-2
Required/As Needed	As needed
Onsite/Remote	Onsite or remote
Security Level	Superuser

Note The following parameters are not backed up and restored: node name, IP address, subnet mask and gateway, and IIOP port. If you change the node name and then restore a backed up database with a different node name, the circuits map to the new renamed node. Cisco recommends keeping a record of the old and new node names.

Caution If you are restoring the database on multiple nodes, wait approximately one minute after the TCC2 reboot has completed on each node before proceeding to the next node.

Step 1 Complete the "DLP-G46 Log into CTC" task on page 2-25 at the node where you are restoring the database. If you are already logged in, continue with Step 2.

Step 2 Click the **Circuits** tab. Verify that no OCHNC circuits have a PARTIAL_OOS state. If any do, investigate and resolve the partial state before continuing.

Step 3 Complete the "DLP-G157 Disable Automatic Power Control" task on page 9-5.

Step 4 In node view, click the **Maintenance > Database** tabs.

Step 5 Click **Restore**.

Step 6 Locate the database file stored on the workstation hard drive or on network storage.

Note To clear all existing provisioning, locate and upload the database found on the latest ONS 15454 software CD.

Step 7 Click the database file to highlight it.

Step 8 Click **Open**. The DB Restore dialog box appears. Opening a restore file from another node or from an earlier backup might affect traffic on the login node (Figure 11-1).

Figure 11-1 Restoring the Database—Traffic Loss Warning

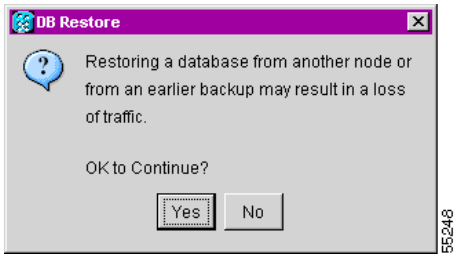

Step 9 Click **Yes**.

The Restore Database dialog box monitors the file transfer (Figure 11-2).

Figure 11-2 Restoring the Database—In-Process Notification

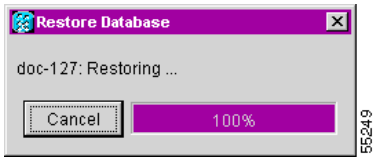

Step 10 Wait for the file to complete the transfer to the TCC2 card.

Step 11 Click **OK** when the "Lost connection to node, changing to Network View" dialog box appears. Wait for the node to reconnect.

Step 12 Complete the "DLP-G158 Enable Automatic Power Control" task on page 9-5.

Stop. You have completed this procedure.

NTP-G105 Restore the Node to Factory Configuration

Purpose	This procedure clears the TCC2 database and restores customer or factory defaults by uploading the most recent software package and a blank database. This process is performed using the RE-INIT.jar utility, also called the reinitialization (reinit) tool.
Tools/Equipment	Software CD containing Software Release 4.7, the node NE defaults, and the reinit tool. JRE 1.3.2 must be installed on the computer you use to perform this procedure.
Prerequisite Procedures	NTP-G103 Back Up the Database, page 11-2
Required/As Needed	As needed
Onsite/Remote	Onsite
Security Level	Superuser

Caution Cisco strongly recommends that you keep different node databases in separate folders. This is because the reinit tool chooses the first product-specific software package in the specified directory if you use the Search Path field instead of the Package and Database fields. You might accidentally copy an incorrect database if multiple databases are kept in the specified directory.

Caution Restoring a node to the factory configuration deletes all cross-connects on the node.

Caution If you are restoring the database on multiple nodes, wait until the TCC2 cards have rebooted on each node before proceeding to the next node.

Caution Restoring a node to factory configuration on a Windows or UNIX workstation should only be carried out on a standby TCC2 card.

Caution Cisco recommends that you save the node database to safe location if you will not be restoring the node using the database provided on the software CD.

Note The following parameters are not backed up and restored when you delete the database and restore the factory settings: node name, IP address, subnet mask and gateway, and IIOP port. If you change the node name and then restore a backed up database with a different node name, the circuits map to the new renamed node. Cisco recommends keeping a record of the old and new node names.

Step 1 If you need to install or replace one or more TCC2 cards, see the "DLP-G33 Install the TCC2 Card" task on page 1-73.

Step 2 If you are using Microsoft Windows, complete the "DLP-G248 Use the Reinitialization Tool to Clear the Database and Upload Software (Windows)" task on page 11-6.

Step 3 If you are using UNIX, complete the "DLP-G249 Use the Reinitialization Tool to Clear the Database and Upload Software (UNIX)" task on page 11-8.

Stop. You have completed this procedure.

DLP-G248 Use the Reinitialization Tool to Clear the Database and Upload Software (Windows)

Purpose	This procedure describes how to use the reinitialization (reinit) tool in Windows. Use this tool to clear the database on the TCC2, upload software, and restore factory or customer defaults.
Tools/Equipment	Software CD containing Software R3.4 or later, the NE defaults, and the reinit tool Straight-through (CAT-5) LAN cable JRE 1.4.2 must be installed on your PC
Prerequisite Procedures	NTP-G103 Back Up the Database, page 11-2
Required/As Needed	As needed to clear the existing database from a TCC2 and restore the node default settings.
Onsite/Remote	Onsite
Security Level	Superuser

Caution Restoring a node to the factory configuration deletes all cross-connects on the node.

Caution Restoring a node to factory configuration on a Windows workstation should only be carried out on a standby TCC2 card.

Note The TCC2 cards reboot several times during this procedure. Wait until they are completely rebooted before continuing.

Step 1 Insert the system software CD containing the reinit tool, software, and defaults database into the computer CD-ROM drive. If the CTC Installation Wizard appears, click **Cancel**.

Step 2 To find the recovery tool file, go to **Start > Run > Browse** and select the CD drive.

Step 3 On the CD drive, go to the CISCO15454 folder and choose **All Files** from the Files of Type drop-down list.

Step 4 Select the RE-INIT.jar file and click **Open** to open the reinit tool (Figure 11-3).

Figure 11-3 Reinitialization Tool in Windows

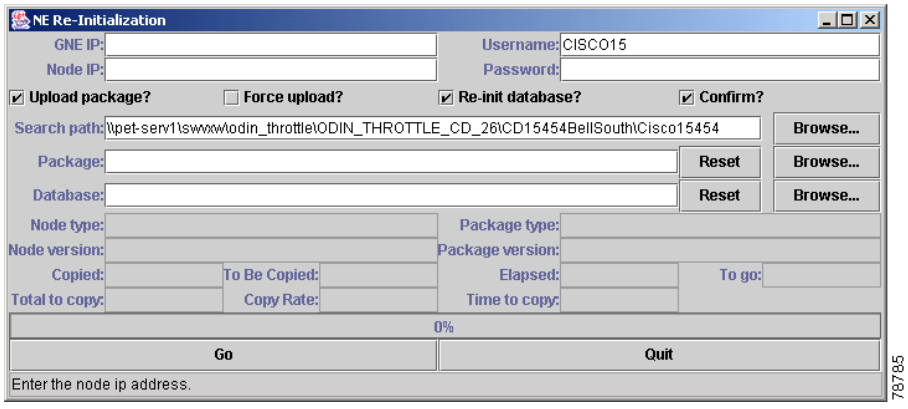

Step 5 If the node you are reinitializing is an end network element (ENE) in a proxy server network, enter the IP address of the gateway network element (GNE) in the GNE IP field. If not, leave it blank.

Step 6 Enter the node name or IP address of the node you are reinitializing in the Node IP field (Figure 11-3).

Step 7 If the User ID field does not contain your user ID, enter the ID. Enter your password in the Password field.

Step 8 Verify that the Re-Init Database, Upload Package, and Confirm check boxes are checked. If one is not checked, check the check box.

Step 9 In the Search Path field, verify that the path to the CISCO15454 folder on the CD drive is listed.

Caution Before you perform the next step, be sure you are uploading the correct database. You cannot reverse the upload process after you click Yes.

Step 10 Click **Go**. A confirmation dialog box appears (Figure 11-4).

Figure 11-4 Confirming NE Restoration

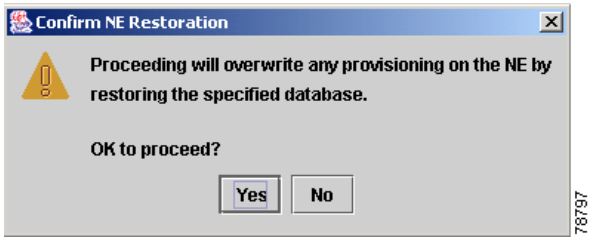

Step 11 Click **Yes**.

Step 12 The status bar at the bottom of the screen displays Complete when the node has activated the software and uploaded the database.

Note The Complete message only indicates that the TCC2 successfully uploaded the database, not that the database restore was successful. The TCC2 then tries to restore the database after it reboots.

Step 13 If you are logged into CTC, close the browser window and disconnect the straight-through LAN cable from the RJ-45 (LAN) port on the TCC2 card or on the hub or switch to which the ONS 15454 is physically connected. Reconnect your straight-through LAN cable to the LAN port and log back into CTC.

Step 14 Manually set the node name and network configuration to site-specific values. See the "NTP-G24 Set Up Name, Date, Time, and Contact Information" procedure on page 3-6 and "NTP-G26 Set Up CTC Network Access" procedure on page 3-8 for information on setting the node name, IP address, subnet mask and gateway, and IIOP port.

Step 15 Return to your originating procedure (NTP).

DLP-G249 Use the Reinitialization Tool to Clear the Database and Upload Software (UNIX)

Purpose	This task describes how to use the reinitialization (reinit) tool in a UNIX environment. Use this tool to clear the database on the TCC2 card and restore factory or customer defaults.
Tools/Equipment	Software CD containing Software R3.4 or later, the node NE defaults, and the reinit tool. JRE 1.4.2 must be installed on the computer that you use to perform this procedure.
Prerequisite Procedures	NTP-G103 Back Up the Database, page 11-2
Required/As Needed	As needed to clear the existing database from a TCC2 card and restore the node default settings.
Onsite/Remote	Onsite or remote
Security Level	Superuser

Caution Restoring a node to the factory configuration deletes all cross-connects on the node.

Caution Restoring a node to factory configuration on a UNIX workstation should only be carried out on a standby TCC2 card.

Note The TCC2 cards reboot several times during this procedure. Wait until they are completely rebooted before continuing.

Note JRE 1.4.2 must be installed on the computer you use to perform this procedure.

Step 1 Insert the system software CD containing the reinit tool, software, and defaults database into the computer CD-ROM drive. If the CTC Installation Wizard appears, click **Cancel**.

Step 2 To find the recovery tool file, go to the CISCO15454 directory on the CD (usually /cdrom/cdrom0/CISCO15454).

Step 3 If you are using a file explorer, double-click the **RE-INIT.jar** file to open the reinit tool (Figure 11-5). If you are working with a command line interface, run **java -jar RE-INIT.jar**.

Figure 11-5 Reinitialization Tool in UNIX

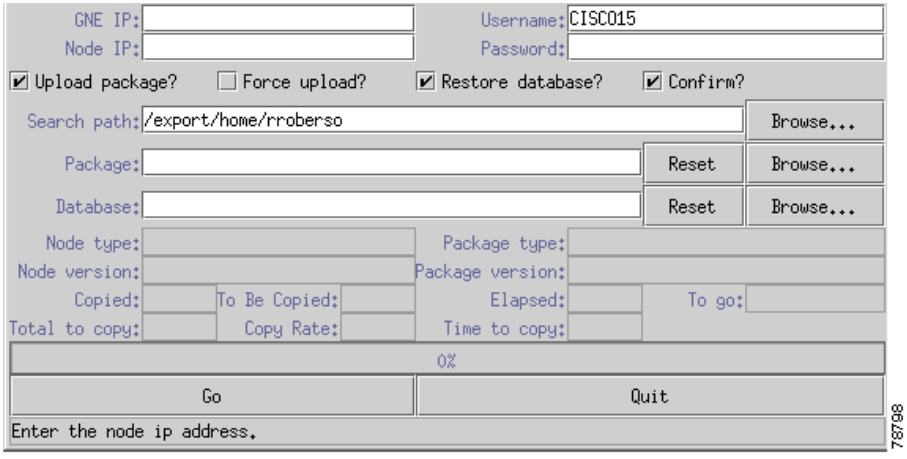

Step 4 If the node you are reinitializing is an ENE in a proxy server network, enter the IP address of the GNE in the GNE IP field. If not, leave it blank.

Step 5 Enter the node name or IP address of the node you are reinitializing in the Node IP field.

Step 6 If the User ID field does not contain your user ID, enter the ID. Enter your password in the Password field.

Step 7 Verify that the Re-Init Database, Upload Package, and Confirm check boxes are checked. If any are not checked, check them.

Step 8 In the Search Path field, verify that the path to the CISCO15454 folder on the CD-ROM drive is listed.

Caution Before you perform the next step, be sure you are uploading the correct database. You cannot reverse the upload process after you click Yes.

Step 9 Click **Go**. A confirmation dialog box appears (Figure 11-4 on page 11-7).

Step 10 Click **Yes**.

Step 11 The status bar at the bottom of the screen displays Complete when the node has activated the software and uploaded the database.

Note The Complete message only indicates that the TCC2 successfully uploaded the database, not that the database restore was successful. The TCC2 then tries to restore the database after it reboots.

Step 12 If you are logged into CTC, close the browser window and disconnect the straight-through LAN cable from the RJ-45 (LAN) port on the TCC2 card or on the hub or switch where the ONS 15454 is physically connected. Reconnect your straight-through LAN cable to the LAN port and log back into CTC.

Step 13 Set the node name and network configuration to site-specific values. See the "NTP-G80 Change Node Management Information" procedure on page 9-8 and the "NTP-G81 Change CTC Network Access" procedure on page 9-10 for information on provisioning the node name, IP address, subnet mask and gateway, and IIOP port.

Step 14 Return to your originating procedure (NTP).

NTP-G106 Reset Cards Using CTC

Purpose	This procedure resets the TCC2 and DWDM cards using CTC.
Tools/Equipment	None
Prerequisite Procedures	DLP-G33 Install the TCC2 Card, page 1-73
Required/As Needed	As needed
Onsite/Remote	Onsite or remote
Security Level	Superuser

Step 1 Complete the "DLP-G46 Log into CTC" task on page 2-25 at the node where you are performing the TCC2 reset. If you are already logged in, continue with Step 2.

Step 2 As needed, complete the "DLP-G250 Reset the TCC2 Card" task on page 11-10.

Step 3 As needed, complete the "DLP-G251 Reset DWDM Cards Using CTC" task on page 11-11.

Stop. You have completed this procedure.

DLP-G250 Reset the TCC2 Card

Purpose	This task resets the TCC2 card and switches the node to the redundant TCC2.
Tools/Equipment	None
Prerequisite Procedures	DLP-G33 Install the TCC2 Card, page 1-73 DLP-G46 Log into CTC, page 2-25
Required/As Needed	As needed
Onsite/Remote	Onsite or remote
Security Level	Superuser

Warning **Do not reach into a vacant slot or chassis while you install or remove a module or a fan. Exposed circuitry could constitute an energy hazard.**

Note Before you reset the TCC2, you should wait at least 60 seconds after the last provisioning change you made to avoid losing any changes to the database.

Note When a software reset is performed on an active TCC2, the AIC-I card goes through an initialization process and also resets. The AIC-I card reset is normal and happens each time an active TCC2 card goes through a software-initiated reset.

Step 1 Click the **Alarms** tab.

a. Verify that the alarm filter is not on. See the "DLP-G128 Disable Alarm Filtering" task on page 7-32 as necessary.

b. Verify that no unexplained alarms appear on the network. If alarms appear, investigate and resolve them before continuing. Refer to the *Cisco ONS 15454 SONET and DWDM Troubleshooting Guide* for procedures.

Step 2 In node view, right-click the TCC2 card to reveal a drop-down list.

Step 3 Click **Reset Card**.

Step 4 Click **Yes** when the confirmation dialog box appears.

Step 5 Click **OK** when the "Lost connection to node, changing to Network View" dialog box appears.

Note For LED behavior during a TCC2 reboot, see Table 3-1 on page 3-12.

Step 6 Confirm that the TCC2 card LED is amber (standby).

Step 7 Return to your originating procedure (NTP).

DLP-G251 Reset DWDM Cards Using CTC

Purpose	This task resets the OSCM, OSC-CSM, 32MUX-O, 32DMX-O, 32DMX, 32WSS, OPT-BST, OPT-PRE, AD-xC.xx.x, AD-xB.xx.x, TXP, and MXP cards using CTC.
Tools/Equipment	None
Prerequisite Procedures	NTP-G30 Install the DWDM Cards, page 3-26 NTP-G32 Install the Transponder and Muxponder Cards, page 3-30 DLP-G46 Log into CTC, page 2-25
Required/As Needed	As needed
Onsite/Remote	Onsite or remote
Security Level	Superuser

Warning **Do not reach into a vacant slot or chassis while you install or remove a module or a fan. Exposed circuitry could constitute an energy hazard.**

Caution For TXP or MXP cards placed in a Y-cable protection group, do not perform a software reset on both cards simultaneously. Doing so will cause a traffic hit of more than one minute. For more information about Y-cable protection groups, refer to the "NTP-G33 Create a Y-Cable Protection Group" procedure on page 3-33.

Caution Resetting the active card in a Y-cable group will cause a traffic outage if the standby card is down for any reason.

Note ONS 15454 cards normally do not need to be reset. However, you may occasionally need to reset a card for testing or as an initial trouble-clearing step. For additional information, see the *Cisco ONS 15454 SONET and DWDM Troubleshooting Guide*.

Step 1 If you will switch an active TXP or MXP card that is in a Y-Cable protection group, complete the "DLP-G179 Apply a Force Y-Cable or Splitter Protection Switch" task on page 9-24. If not, continue with Step 2.

Step 2 Right-click the card you want to reset to reveal a drop-down list.

Step 3 Click **Reset Card**.

Step 4 Click **Yes** when the confirmation dialog box appears.

The card LED on the ONS 15454 shelf graphic will go through the following sequence: Fail (white LED), Ldg (white LED), and Act (green LED). The reset should complete within 1 to 2 minutes.

Step 5 If you performed a Y-Cable protection group switch in Step 1, complete the "DLP-G180 Clear a Manual or Force Y-Cable or Splitter Protection Switch" task on page 9-25. If not, continue with Step 6.

Step 6 Return to your originating procedure (NTP).

NTP-G107 Remove and Replace DWDM Cards

Purpose	This procedure removes and replaces DWDM cards housed in the ONS 15454 shelf and rack.
Tools/Equipment	None
Prerequisite Procedures	A card installation procedure
Required/As Needed	As needed
Onsite/Remote	Onsite
Security Level	Provisioning or higher

Caution Do not use this procedure to replace a TCC2 card. To replace a TCC2 card, refer to the *Cisco ONS 15454 SONET and DWDM Troubleshooting Guide*.

Step 1 If you are not connected to the ONS 15454 through an onsite connection and logged into CTC, complete the following tasks. If you are logged into CTC through an onsite connection, continue with Step 2.

- "DLP-G45 Connect Computer to the ONS 15454" task on page 2-24
- "DLP-G46 Log into CTC" task on page 2-25

Note If you cannot log into CTC and you need to remove a card, remove the card as described in Step 6. After you log into CTC, troubleshoot the mismatched equipment alarm (MEA) with the *Cisco ONS 15454 SONET and DWDM Troubleshooting Guide*.

Step 2 Click the **Alarms** tab.

a. Verify that the alarm filter is not on. See the "DLP-G128 Disable Alarm Filtering" task on page 7-32 as necessary.

b. Verify that no unexplained alarms appear on the network. If alarms appear, investigate and resolve them before continuing. Refer to the *Cisco ONS 15454 SONET and DWDM Troubleshooting Guide* for procedures.

Step 3 Complete the following tasks, as needed:

- If the card you want to replace is the active card in a Y-Cable protection group, complete the "DLP-G179 Apply a Force Y-Cable or Splitter Protection Switch" task on page 9-24 to force traffic away from the card that you will remove. If the card you want to replace is the standby card in a Y-Cable protection group, complete the "DLP-G182 Apply a Lock Out" task on page 9-26 to keep traffic from switching to the card that you will remove.
- If the card carries circuits, you must delete them. Complete the "DLP-G106 Delete Optical Channel Network Connections" task on page 6-11.
- If the card is an OSCM or OSC-CSM that is used as a node timing reference, complete the "NTP-G112 Change the Node Timing Reference" procedure on page 11-24.
- If the card is an OSCM or OSC-CSM with an OSC or GCC termination, complete the "NTP-G85 Modify or Delete Communications Channel Terminations and Provisionable Patchcords" procedure on page 9-28.

Note If you delete a card in CTC but do not remove it from the shelf, it will reboot and reappear in CTC.

Step 4 Place the ports out of service using one of the following tasks:

- "DLP-G252 Place TXP and MXP Ports Out of Service" task on page 11-14
- "DLP-G253 Place OSCM and OSC-CSM Ports Out of Service" task on page 11-15
- "DLP-G254 Place OPT-BST and OPT-BST Ports Out of Service" task on page 11-16
- "DLP-G255 Place 32MUX-0, 32WSS, 32DMX-O, and 32DMX Ports Out of Service" task on page 11-16
- "DLP-G256 Place 4MD-xx.x Ports Out of Service" task on page 11-17
- "DLP-G257 Place Band OADM Ports Out of Service" task on page 11-18
- "DLP-G258 Place Channel OADM Ports Out of Service" task on page 11-18

Step 5 Click the **Alarms** tab. Verify that alarms unrelated to tasks performed in Step 3 do not appear. If unexplained alarms appear, investigate and resolve them before continuing. Refer to the *Cisco ONS 15454 SONET and DWDM Troubleshooting Guide* for procedures.

Step 6 Physically remove the card:

a. Open the card latches/ejectors.

b. Use the latches/ejectors to pull the card forward and away from the shelf.

Step 7 Insert the new card using one of the following procedures as applicable:

- NTP-G30 Install the DWDM Cards, page 3-26
- NTP-G32 Install the Transponder and Muxponder Cards, page 3-30

Step 8 Continue with the "NTP-G34 Install Fiber-Optic Cables on DWDM Cards" procedure on page 3-35.

Step 9 Complete the "NTP-G37 Run Automatic Node Setup" procedure on page 3-58.

Step 10 Complete the following tasks, as needed:

- If you switched a Y-Cable protection group in Step 3, complete the "DLP-G180 Clear a Manual or Force Y-Cable or Splitter Protection Switch" task on page 9-25.
- If you deleted circuits in Step 3, complete the "DLP-G105 Provision DWDM Optical Channel Network Connections" task on page 6-9.
- If you switched the timing reference in Step 3, complete the "NTP-G112 Change the Node Timing Reference" procedure on page 11-24.
- If you deleted an OSC or GCC termination in Step 3, complete the "NTP-G85 Modify or Delete Communications Channel Terminations and Provisionable Patchcords" procedure on page 9-28.

Step 11 Click the **Alarms** tab.

a. Verify that the alarm filter is not on. See the "DLP-G128 Disable Alarm Filtering" task on page 7-32 as necessary.

b. Verify that no unexplained alarms appear on the network. If alarms appear, investigate and resolve them. Refer to the *Cisco ONS 15454 SONET and DWDM Troubleshooting Guide* for procedures.

Stop. You have completed this procedure.

DLP-G252 Place TXP and MXP Ports Out of Service

Purpose	This task places TXP and MXP ports out of service in preparation for card removal.
Tools/Equipment	None
Prerequisite Procedures	DLP-G46 Log into CTC, page 2-25
Required/As Needed	As needed
Onsite/Remote	Onsite or remote
Security Level	Provisioning or higher

Step 1 On the node view shelf graphic, double-click the TXP or MXP card with the ports you want to put out of service.

Step 2 Click the **Provisioning > Line** tabs.

Step 3 Under Admin State, choose **OOS,DSLB** for each port that does not have an OOS-MA,DSLB service state.

Step 4 Click **Apply**.

Step 5 In the confirmation dialog box, click **Yes**.

Step 6 Return to your originating procedure (NTP).

DLP-G253 Place OSCM and OSC-CSM Ports Out of Service

Purpose	This task places OSCM and OSC-CSM card ports out of service in preparation for card removal.
Tools/Equipment	None
Prerequisite Procedures	DLP-G46 Log into CTC, page 2-25
Required/As Needed	As needed
Onsite/Remote	Onsite or remote
Security Level	Provisioning or higher

Step 1 On the shelf graphic in CTC, double-click the OSCM or OSC-CSM card with the ports you want to put out of service.

Step 2 Click the **Provisioning** > **OC3** > **OC3** tabs.

Step 3 Under Admin State, choose **OOS,DSLB** for each port that does not have an OOS-MA,DSLB service state.

Step 4 Click **Apply**.

Step 5 In the confirmation dialog box, click **Yes**.

Step 6 Click the **Provisioning** > **Optical Line** > **Parameters** tabs.

Step 7 Under Admin State, choose **OOS,DSLB** for each port that does not have an OOS-MA,DSLB service state.

Step 8 Click **Apply**.

Step 9 In the confirmation dialog box, click **Yes**.

Step 10 Return to your originating procedure (NTP).

DLP-G254 Place OPT-BST and OPT-BST Ports Out of Service

Purpose	This task places OPT-BST and OPT-PRE card ports out of service in preparation for card removal.
Tools/Equipment	None
Prerequisite Procedures	DLP-G46 Log into CTC, page 2-25
Required/As Needed	As needed
Onsite/Remote	Onsite or remote
Security Level	Provisioning or higher

Step 1 On the shelf graphic in CTC, double-click the OPT-BST or OPT-PRE card with the ports you want to put out of service.

Step 2 Click the **Provisioning** > **Optical Line** > **Parameters** tabs.

Step 3 Under Admin State, choose **OOS,DSLB** for each port that does not have an OOS-MA,DSLB service state.

Step 4 Click **Apply**.

Step 5 In the confirmation dialog box, click **Yes**.

Step 6 Click the **Provisioning** > **Opt Apli Line** > **Parameters** tabs.

Step 7 Under Admin State, choose **OOS,DSLB** for each port that does not have an OOS-MA,DSLB service state.

Step 8 Click **Apply**.

Step 9 In the confirmation dialog box, click **Yes**.

Step 10 Return to your originating procedure (NTP).

DLP-G255 Place 32MUX-0, 32WSS, 32DMX-O, and 32DMX Ports Out of Service

Purpose	This task places 32MUX-O, 32WSS, 32DMX-O, and 32DMX card ports out of service in preparation for card removal.
Tools/Equipment	None
Prerequisite Procedures	DLP-G46 Log into CTC, page 2-25
Required/As Needed	As needed
Onsite/Remote	Onsite or remote
Security Level	Provisioning or higher

Step 1 On the shelf graphic in CTC, double-click the 32MUX-O or 32DMX card with the ports you want to put out of service.

Step 2 Click the **Provisioning** > **Optical Chn** > **Parameters** tabs. (For 32WSS cards, the tabs are Provisioning > Optical Chn Optical Connector 1 > Parameters.)

Step 3 Under Admin State, choose **OOS,DSLB** for each port that does not have an OOS-MA,DSLB service state.

Step 4 Click **Apply**.

Step 5 In the confirmation dialog box, click **Yes**.

Step 6 If the card is a 32WSS, repeat Steps 3 through 5 for the Optical Chn Optical Connector [2...4] tabs.

Step 7 Click the **Provisioning** > **Optical Line > Parameters** tabs.

Step 8 Under Admin State, choose **OOS,DSLB** for each port that does not have an OOS-MA,DSLB service state.

Step 9 Click **Apply**.

Step 10 In the confirmation dialog box, click **Yes**.

Step 11 Return to your originating procedure (NTP).

DLP-G256 Place 4MD-xx.x Ports Out of Service

Purpose	This task places 4MD-xx.x card ports out of service in preparation for card removal.
Tools/Equipment	None
Prerequisite Procedures	DLP-G46 Log into CTC, page 2-25
Required/As Needed	As needed
Onsite/Remote	Onsite or remote
Security Level	Provisioning or higher

Step 1 On the shelf graphic in CTC, double-click the 4MD card with the ports you want to put out of service.

Step 2 Click the **Provisioning** > **Optical Chn > Parameters** tabs.

Step 3 Under Admin State, choose **OOS,DSLB** for each port that does not have an OOS-MA,DSLB service state.

Step 4 Click **Apply**.

Step 5 In the confirmation dialog box, click **Yes**.

Step 6 Click the **Provisioning** > **Optical Band > Parameters** tabs.

Step 7 Under Admin State, choose **OOS,DSLB** for each port that does not have an OOS-MA,DSLB service state.

Step 8 Click **Apply**.

Step 9 In the confirmation dialog box, click **Yes**.

Step 10 Return to your originating procedure (NTP).

DLP-G257 Place Band OADM Ports Out of Service

Purpose	This task places the AD-1B-xx.x and AD-4B-xx.x card ports out of service in preparation for card removal.
Tools/Equipment	None
Prerequisite Procedures	DLP-G46 Log into CTC, page 2-25
Required/As Needed	As needed
Onsite/Remote	Onsite or remote
Security Level	Provisioning or higher

Step 1 On the shelf graphic in CTC, double-click the AD-1B-xx.x or AD-4B-xx.x card with the ports you want to put out of service.

Step 2 Click the **Provisioning** > **Optical Line** > **Parameters** tabs.

Step 3 Under Admin State, choose **OOS,DSLB** for each port that does not have an OOS-MA,DSLB service state.

Step 4 Click **Apply**.

Step 5 In the confirmation dialog box, click **Yes**.

Step 6 Click the **Provisioning** > **Optical Band** > **Parameters** tabs.

Step 7 Under Admin State, choose **OOS,DSLB** for each port that does not have an OOS-MA,DSLB service state.

Step 8 Click **Apply**.

Step 9 In the confirmation dialog box, click **Yes**.

Step 10 Return to your originating procedure (NTP).

DLP-G258 Place Channel OADM Ports Out of Service

Purpose	This task places the AD-1C-xx.x, AD-2C-xx.x, and AD-4C-xx.x card ports out of service in preparation for card removal.
Tools/Equipment	None
Prerequisite Procedures	DLP-G46 Log into CTC, page 2-25
Required/As Needed	As needed
Onsite/Remote	Onsite or remote
Security Level	Provisioning or higher

Step 1 On the shelf graphic in CTC, double-click the AD-1C-xx.x, AD-2C-xx.x, or AD-4C-xx.x card with the ports you want to put out of service.

Step 2 Click the **Provisioning** > **Optical Line** > **Parameters** tabs.

Step 3 Under Admin State, choose **OOS,DSLB** for each port that does not have an OOS-MA,DSLB service state.

Step 4 Click **Apply**.

Step 5 In the confirmation dialog box, click **Yes**.

Step 6 Click the **Provisioning** > **Optical Chn** > **Parameters** tabs.

Step 7 Under Admin State, choose **OOS,DSLB** for each port that does not have an OOS-MA,DSLB service state.

Step 8 Click **Apply**.

Step 9 In the confirmation dialog box, click **Yes**.

Step 10 Return to your originating procedure (NTP).

NTP-G108 Viewing the Audit Trail Records

Purpose	This procedure describes how to view audit trail records.
Tools/Equipment	None
Prerequisite Procedures	None
Required/As Needed	As needed
Onsite/Remote	Onsite or remote
Security Level	Provisioning

Step 1 Complete the "DLP-G46 Log into CTC" task on page 2-25 at the node where you want to view the audit trail log. If you are already logged in, continue with Step 2.

Step 2 In the node view, click the **Maintenance** > **Audit** tabs.

Step 3 Click **Retrieve**.

A window containing the most recent audit trail records appears as shown in Figure 11-6.

Figure 11-6 Viewing the Audit Trail Records

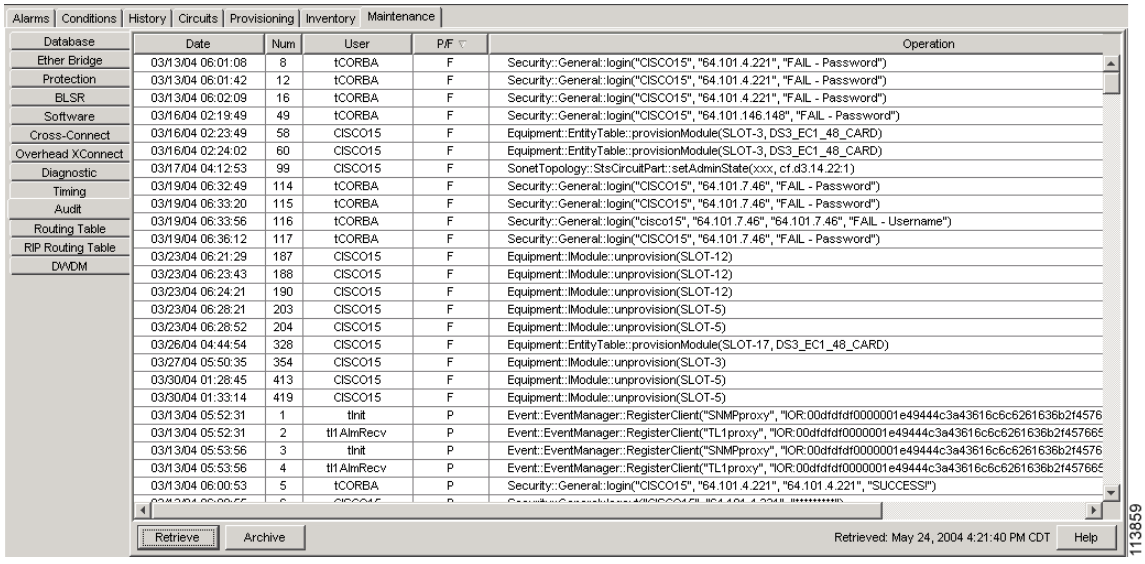

A definition of each column in the audit trail log is listed in Table 11-1.

Table 11-1 Audit Trail Column Definitions

Column	Definition
Date	Date when the action occurred in the format MM/dd/yy HH:mm:ss
Num	Incrementing count of actions
User	User ID that initiated the action
P/F	Pass/Fail (that is, whether or not the action was executed)
Operation	Action that was taken

Right-click on the column headings to display the list in ascending-to-descending or descending-to-ascending order.

Left-click on the column heading to display the following options:

- Reset Sorting—Resets the column to the default setting
- Hide Column—Hides the column from view
- Reset Columns Order/Visibility—Displays all hidden columns
- Row Count—Provides a numerical count of log entries

Shift-click on the column heading for an incremental sort of the list.

Stop. You have completed this procedure.

NTP-G109 Off-Load the Audit Trail Record

Purpose	This procedure describes how to off-load up to 640 audit trail log entries in a local or network drive file to maintain a record of actions performed for the node. If the audit trail log is not off-loaded, the oldest entries are overwritten after the log reaches capacity.
Tools/Equipment	None
Prerequisite Procedures	None
Required/As Needed	As needed
Onsite/Remote	Onsite or remote
Security Level	Provisioning

Step 1 Complete the "DLP-G46 Log into CTC" task on page 2-25 at the node where you want to off-load the audit trail log. If you are already logged in, continue with Step 2.

Step 2 In the node view, click the **Maintenance > Audit** tabs.

Step 3 Click **Retrieve**.

Step 4 Click **Archive**.

Step 5 In the Archive Audit Trail dialog box, navigate to the directory (local or network) where you want to save the file.

Step 6 Enter a name in the File Name field.

You do not have to give the archive file a particular extension. It is readable in any application that supports text files, such as WordPad, Microsoft Word (imported), etc.

Step 7 Click **Save**.

The 640 entries are saved in this file. The next entries continue with the next number in the sequence, rather than starting over.

Note Archiving does not delete entries from the CTC audit trail log. However, entries can be self-deleted by the system after the log maximum is reached. If you archived the entries, you cannot reimport the log file back into CTC and will have to view the log in a different application.

Stop. You have completed this procedure.

NTP-G110 Off-Load the Diagnostics File

Purpose	This task describes how to off-load a diagnostics file.
Tools/Equipment	None
Prerequisite Procedures	None
Required/As Needed	As needed
Onsite/Remote	Onsite or remote
Security Level	Maintenance

Step 1 Complete the "DLP-G46 Log into CTC" task on page 2-25 at the node where you want to off-load the diagnostics file. If you are already logged in, continue with Step 2.

Step 2 In the node view, click the **Maintenance > Diagnostic** tabs.

Step 3 Click **Retrieve Diagnostics File**.

Step 4 In the Saving Diagnostic File dialog box, navigate to the directory (local or network) where you want to save the file.

Step 5 Enter a name in the File Name field.

You do not have to give the archive file a particular extension. It is readable in any application that supports text files, such as WordPad, Microsoft Word (imported), etc.

Step 6 Click **Save**.

The Get Diagnostics status window shows a progress bar indicating the percentage of the file being saved, then shows "Get Diagnostics Complete."

Step 7 Click **OK**.

Stop. You have completed this procedure.

NTP-G111 Revert to an Earlier Software Load

Purpose	This procedure reverts the ONS 15454 database to an earlier software load.
Tools/Equipment	None
Prerequisite Procedures	DLP-G33 Install the TCC2 Card, page 1-73
Required/As Needed	As needed
Onsite/Remote	On site or remote
Security Level	Superuser

Tip The revert feature is useful if a maintenance window closes while you are upgrading CTC software. You can revert to the protect software load without losing traffic. When the next maintenance window appears, complete the upgrade and activate the new software load.

Caution Provisioning performed after a software load is activated (upgraded to a higher software release) will not reinstate with a revert. The database configuration at the time of activation is reinstated by a revert.

Note Circuits created and provisioning performed after a software load is activated (upgraded to a later software release) do not reinstate with a revert. The database configuration at the time of activation is reinstated after a revert. This note does not apply to maintenance reverts (for example, R2.2.2 to R2.2.1), because maintenance releases use the same database.

Step 1 Complete the "DLP-G46 Log into CTC" task on page 2-25 to log into the node you want to revert. If you are already logged in, continue with Step 2.

Step 2 Record the IP address of that node; the IP address is displayed on the left side of the node view window.

Note To find the IP address, you can also click the **Provisioning > Network > General** tabs.

Step 3 If you are reverting to a previous software release (not a maintenance release), record any new circuits created since the previous software upgrade because these circuits have to be manually recreated after the software reversion if you still need to have them.

Step 4 Click the **Maintenance > Software** tabs.

Step 5 Click **Revert**. The Revert button activates the protect software load.

Step 6 Click **Yes** in the revert confirmation dialog box. The ONS 15454 reboots and loses the connection to CTC.

Step 7 Wait until the software upgrade finishes. This might take as long as 30 minutes.

Step 8 When the software upgrade is finished, click the **Delete CTC Cache** button in the browser window.

Step 9 Completely close the browser.

Step 10 Restart the browser and log back into the node using the IP address recorded in Step 2.

The browser downloads the CTC applet for the protect software load.

Step 11 If needed, recreate the circuits recorded in Step 3. See Chapter 6, "Create Channels and Circuits" for specific circuit creation procedures.

Stop. You have completed this procedure.

NTP-G112 Change the Node Timing Reference

Purpose	This procedure enables automatic timing reference switching or returns the node timing to normal operation.
Tools/Equipment	None
Prerequisite Procedures	NTP-G53 Set Up Timing, page 5-4
Required/As Needed	As needed
Onsite/Remote	Onsite or remote
Security Level	Maintenance or higher

Step 1 Complete the "DLP-G46 Log into CTC" task on page 2-25 at the node where you want to enable timing switching. If you are already logged in, continue with Step 2.

Step 2 Complete the "DLP-G259 Manual or Force Switch the Node Timing Reference" task on page 11-24 as needed.

Step 3 Complete the "DLP-G260 Clear a Manual or Force Switch on a Node Timing Reference" task on page 11-25 as needed.

Stop. You have completed this procedure.

DLP-G259 Manual or Force Switch the Node Timing Reference

Purpose	This task commands the node to switch to the timing reference you have selected.
Tools/Equipment	None
Prerequisite Procedures	DLP-G46 Log into CTC, page 2-25
Required/As Needed	As needed
Onsite/Remote	Onsite or remote
Security Level	Maintenance or higher

Step 1 In node view, click the **Maintenance > Timing > Source** tabs.

Step 2 From the Reference drop-down list for the desired Clock, choose the desired reference.

Step 3 From the Operation drop-down list for the desired Clock, choose one of the following options:

- **Manual**—This operation commands the node to switch to the reference you have selected if the SSM quality of the reference is not lower than the current timing reference.
- **Force**—This operation commands the node to switch to the reference you have selected, regardless of the SSM quality (if the reference is valid).

Note For information about the Clear option, see the "DLP-G260 Clear a Manual or Force Switch on a Node Timing Reference" task on page 11-25.

Step 4 Click **Apply** next to the timing source.

Step 5 Click **Yes** in the confirmation dialog box. If the selected timing reference is an acceptable valid reference, the node switches to the selected timing reference. If the selected timing reference is invalid, a warning dialog box appears. Click **OK**; the node will not switch to the new timing reference.

Step 6 Return to your originating procedure (NTP).

DLP-G260 Clear a Manual or Force Switch on a Node Timing Reference

Purpose	This task clears a Manual or Force switch on a node timing reference and reverts the timing reference to its provisioned reference.
Tools/Equipment	None
Prerequisite Procedures	DLP-G46 Log into CTC, page 2-25
Required/As Needed	As needed
Onsite/Remote	Onsite or remote
Security Level	Maintenance or higher

Step 1 In node view, click the **Maintenance > Timing > Source** tabs.

Step 2 Find the Clock reference that is currently set to Manual or Force in the Operation menu.

Step 3 From the Operation drop-down list, choose **Clear**.

Step 4 Click **Apply**.

Step 5 Click **Yes** in the confirmation dialog box. If the normal timing reference is an acceptable valid reference, the node switches back to the normal timing reference as defined by the system configuration. If the normal timing reference is invalid or has failed, a warning dialog box appears. Click **OK**; the timing reference will not revert.

Step 6 Return to your originating procedure (NTP).

NTP-G113 View the ONS 15454 Timing Report

Purpose	This procedure displays the current status of the ONS 15454 timing references.
Tools/Equipment	None
Prerequisite Procedures	NTP-G53 Set Up Timing, page 5-4
Required/As Needed	As needed
Onsite/Remote	Onsite or remote
Security Level	Maintenance or higher

Step 1 Complete the "DLP-G46 Log into CTC" task on page 2-25 at the node where you want to view the node timing status. If you are already logged in, continue with Step 2.

Step 2 Click the **Maintenance > Timing > Report** tabs.

Step 3 In the Timing Report area, you can view node timing information. The date and time of the report appear at the top of the report. The time stamp is the same as the alarms time stamp and can be configured using the "DLP-G118 Display Alarms and Conditions Using Time Zone" task on page 7-11. Table 11-2 describes the report fields and entries.

Step 4 To update the report, click **Refresh**.

Table 11-2 ONS 15454 Timing Report

Item	Description	Option	Option Description
Clock	Indicates the timing clock. The report section that follows applies to the timing clock indicated.	NE	The node timing clock.
		BITS-1 Out	The BITS-1 Out timing clock.
		BITS-2 Out	The BITS-2 Out timing clock.

Table 11-2 ONS 15454 Timing Report (continued)

Item	Description	Option	Option Description
Status	Indicates the status of the timing clock.	INIT_STATE	The timing reference has not been provisioned. For an NE reference, this status appears just before the first provisioning messages when the TCC2 is booting. Timing is provisioned to the internal clock of the node.
		HOLDOVER_STATE	The clock was locked onto a valid timing reference for more than 140 seconds when a failure occurred. Holdover state timing is a computation based on timing during normal state combined with the node's internal clock. The node holds onto this frequency until the valid reference is restored. This status appears for NE references only.
		FREERUN_STATE	The node is running off its internal clock without any modification except the calibrated value to bring timing to 0 PPM. Freerun state can occur when a Force switch to the Internal clock is initiated, when all references fail without the 140 seconds of holdover data, or when only Internal timing references are defined. This status appears for NE references only.
		NO_SYNC_STATE	A synchronization timing reference is not defined. BITS-1 Out or BITS-2 Out default to this status until an OC-N card is defined as its reference on the Provisioning > Timing tab. This status appears for external references only.
		NE_SYNCH_STATE	BITS-1 Out and BITS-2 Out use the same timing source as the NE. This is displayed when NE Reference is selected in the BITS-1 Out and BITS-2 Out Reference List on the Provisioning > Timing tab.
		NORMAL_STATE	The timing reference is locked onto one of its provisioned references. The reference cannot be Internal or NO SYNC STATE.
		FAST_START_STATE	The node has switched references, but the reference is too far away to reach NORMAL_STATE within an acceptable amount of time. FAST_START_STATE is a fast acquisition mode to allow the node to quickly acquire the reference. After it achieves this goal, the node progresses to the normal state.
		FAST_START_FAILED_STATE	A timing reference is too far away to reach in normal state. The FAST_START_STATE could not acquire sufficient timing information within the allowable amount of time.
Status Changed At	Date and time of the last status change.	—	—
Switch Type	Type of switch.	AUTOMATIC	The timing switch was system-generated.
		Manual	The timing switch was a user-initiated Manual switch.
		Force	The timing switch was user-initiated Force switch.

Table 11-2 ONS 15454 Timing Report (continued)

Item	Description	Option	Option Description
Reference	Indicates the timing reference.	Three timing references are available on the Provisioning > Timing tab.	—
Selected	Indicates whether the reference is selected.	Selected references are indicated with an X.	—
Facility	Indicates the timing facility provisioned for the reference on the Provisioning > Timing tab.	BITS-1	The timing facility is a building integrated timing supply (BITS) clock attached to the node's BITS-1 pins.
		BITS-2	The timing facility is a BITS clock attached to the node's BITS-2 pins.
		OC-N/STM-N card with port number	If the node is set to line timing, this is the OC-N /STM-N card and port provisioned as the timing reference.
		Internal clock	The node is using its internal clock.
State	Indicates the timing reference state.	IS	The timing reference is in service.
		OOS	The timing reference is out of service.
Condition	Indicates the timing reference state.	OKAY	The reference is valid to use as a timing reference.
		OOB	Out of bounds; the reference is not valid and cannot be used as a timing reference, for example, a BITS clock is disconnected.
Condition Changed	Indicates the date and time of the last status change in MM/DD/YY HH:MM:SS format.	—	—
SSM	Indicates whether SSM is enabled for the timing reference.	Enabled	SSM is enabled.
		Disabled	SSM is not enabled.
SSM Quality	Indicates the SSM timing quality.	8 to 10 SSM quality messages might be displayed.	For a list of SSM message sets, see the "18.2.2 Synchronization Status Messaging" section on page 18-8.
SSM Changed	Indicates the date and time of the last SSM status change in MM/DD/YY HH:MM:SS format.	—	—

Stop. You have completed this procedure.

NTP-G114 Inspect, Clean, and Replace the Air Filter

Purpose	This procedure explains how to inspect, clean, and replace the reusable fan tray air filter. This procedure ensures that the air filter is free from dirt and dust, which allows optimum air flow and prevents dirt and dust from entering the shelf.
Tools/Equipment	Vacuum or detergent and water faucet, spare filter, pinned hex key tool
Prerequisite Procedures	None
Required/As Needed	Inspection required every 30 days. Clean as needed.
Onsite/Remote	Onsite
Security Level	None

Warning **Do not reach into a vacant slot or chassis while you install or remove a module or a fan. Exposed circuitry could constitute an energy hazard.**

Note Although the filter can work if it is installed with either side facing up, Cisco recommends that you install it with the metal bracing facing up to preserve the surface of the filter.

Step 1 Verify that you are replacing a reusable air filter. The reusable filter is made of a gray, open-cell, polyurethane foam that is specially coated to provide fire and fungi resistance.

Step 2 If the air filter is installed in the external filter brackets, slide the filter out of the brackets while being careful not to dislodge any dust that might have collected on the filter and proceed to Step 9. Figure 11-7 shows the reusable fan-tray air filter in an external filter bracket on an ANSI shelf. Figure 11-8 shows the reusable fan-tray air filter in an external filter bracket on an ETSI shelf.

Step 3 If the filter is installed below the fan tray and not in the external filter brackets, open the front door of the shelf assembly. If the front door is already open, proceed to Step 4.

a. Open the front door lock.

The ONS 15454 comes with a pinned hex key for locking and unlocking the front door. Turn the key counterclockwise to unlock the door and clockwise to lock it.

b. Press the door button to release the latch.

c. Swing the door open.

Step 4 Remove the front door (optional). If you do not want to remove the door or it is already removed, proceed to Step 5.

a. Detach the ground strap from either the door or the chassis by removing one of the Kepnuts.

b. Place the Kepnut back on the stud after the ground strap is removed to avoid misplacement.

c. Secure the dangling end of the ground strap to the door or chassis with tape.

Figure 11-7 ANSI Shelf Fan-Tray Air Filter in an External Filter Bracket (Front Door Removed)

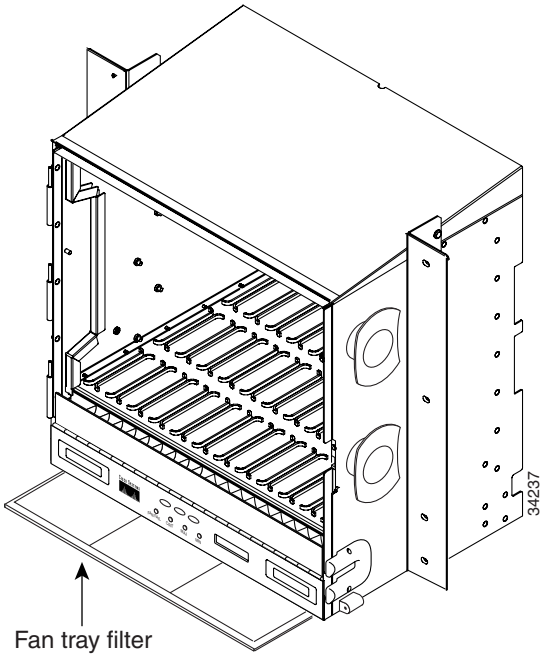

Figure 11-8 ETSI Shelf Fan-Tray Air Filter in an External Filter Bracket (Front Door Removed)

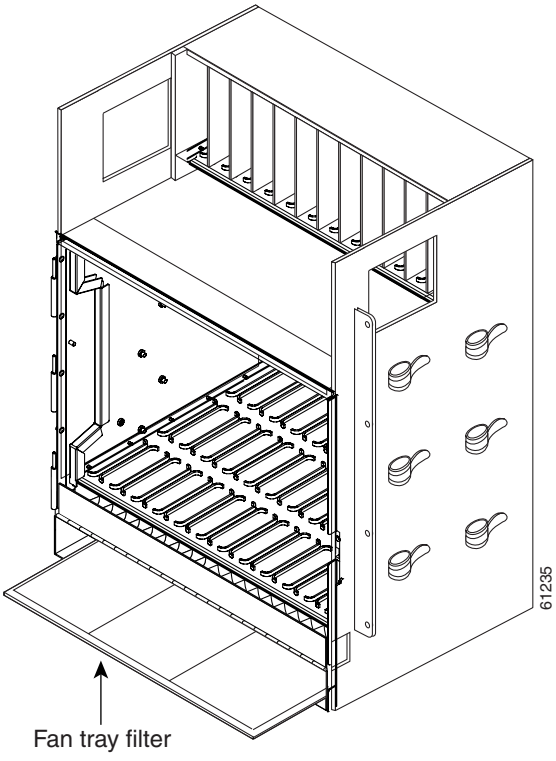

Step 5 Push the outer side of the handles on the fan-tray assembly to expose the handles.

Step 6 Pull the handles and slide the fan-tray assembly one inch (25.4 mm) out of the shelf assembly and wait until the fans stop.

Step 7 When the fans have stopped, pull the fan-tray assembly completely out of the shelf assembly.

Step 8 Gently remove the air filter from the shelf assembly. Be careful not to dislodge any dust that might have collected on the filter.

Step 9 Visually inspect the air filter material for dirt and dust.

Step 10 If the reusable air filter contains a concentration of dirt and dust, replace the dirty air filter with a clean air filter (spare filters should be kept in stock) and reinsert the fan-tray assembly. Then, vacuum the dirty air filter or wash it under a faucet with a light detergent.

Caution Do not leave the fan tray out of the chassis for an extended period of time because excessive heat can damage the ONS 15454 cards.

Note Cleaning should take place outside of the operating environment to avoid releasing dirt and dust near the equipment.

Step 11 If you washed the filter, allow it to completely air dry for at least eight hours.

Warning **Do not put a damp filter back in the ONS 15454.**

Step 12 Replace the clean filter:

a. If the air filter is installed in the external filter brackets, slide the dry air filter all the way to the back of the brackets to complete the procedure.

b. If the filter is installed below the fan-tray assembly, remove the fan-tray assembly and slide the dry/clean air filter into the recessed compartment at the bottom of the shelf assembly. Put the front edge of the air filter flush against the front edge of the recessed compartment. Push the fan tray back into the shelf assembly.

Caution If the fan tray does not slide all the way to the back of the shelf assembly, pull the fan tray out and readjust the position of the reusable filter until the fan tray fits correctly.

Note On a powered-up ONS 15454, the fans start immediately after the fan-tray assembly is correctly inserted.

Step 13 To verify that the tray is plugged into the backplane, ensure that the LCD on the front of the fan-tray assembly is activated and displays node information.

Step 14 Rotate the retractable handles back into their compartments.

Step 15 If you replace the door, also reattach the ground strap.

Step 16 Close and lock the door.

Step 17 Return to your originating procedure (NTP).

NTP-G115 Clean Fiber Connectors

Purpose	This procedure cleans the fiber connectors.
Tools/Equipment	Inspection microscope Compressed air/duster Type A Fiber Optic Connector Cleaner (CLETOP reel) Isopropyl alcohol 70 percent or higher Optical swab Optical receiver cleaning stick
Prerequisite Procedures	None
Required/As Needed	Required
Onsite/Remote	Onsite
Security Level	None

Warning **Invisible laser radiation may be emitted from the end of the unterminated fiber cable or connector. Do not stare into the beam or view directly with optical instruments.**

Step 1 Using an inspection microscope, inspect each fiber connector for dirt, cracks, or scratches.

Step 2 Replace any damaged fiber connectors.

Note Replace all dust caps whenever the equipment is unused for 30 minutes or more.

Step 3 Complete the "DLP-G261 Scope and Clean Fiber Connectors and Adapters with Alcohol and Dry Wipes" task on page 11-33 as necessary.

Step 4 Complete the "DLP-G262 Clean Fiber Connectors with CLETOP" task on page 11-34 as necessary.

Step 5 Complete the "DLP-G263 Clean the Fiber Adapters" task on page 11-34 as necessary.

Caution Do not reuse optical swabs. Keep unused swabs off of work surfaces.

Stop. You have completed this procedure.

DLP-G261 Scope and Clean Fiber Connectors and Adapters with Alcohol and Dry Wipes

Purpose	This task cleans the fiber connectors and adapters with alcohol and dry wipes.
Tools/Equipment	Compressed air/duster Isopropyl alcohol 70 percent or higher Optical swab Optical receiver cleaning stick
Prerequisite Procedures	None
Required/As Needed	Required
Onsite/Remote	Onsite
Security Level	None

Warning **Invisible laser radiation may be emitted from the end of the unterminated fiber cable or connector. Do not stare into the beam or view directly with optical instruments.**

Step 1 Remove the dust cap from the fiber connector.

Step 2 Wipe the connector tip with the premoistened alcohol wipe.

Step 3 Blow-dry using filtered air.

Step 4 Use an inspection microscope to inspect each fiber connector for dirt, cracks, or scratches. If the connector is not clean, repeat Steps 1 to 3.

Step 5 Insert the fiber connector into the applicable adapter or attach a dust cap to the fiber connector.

Note If you must replace a dust cap on a connector, first verify that the dust cap is clean. To clean the dust cap, wipe the outside of the cap using a dry, lint-free wipe and the inside of the dust cap using a CLETOP stick swab (14100400).

Step 6 Return to your originating procedure (NTP).

DLP-G262 Clean Fiber Connectors with CLETOP

Purpose	This task cleans the fiber connectors with CLETOP.
Tools/Equipment	Type A Fiber Optic Connector Cleaner (CLETOP reel)
	Optical receiver cleaning stick
Prerequisite Procedures	None
Required/As Needed	Required
Onsite/Remote	Onsite
Security Level	None

Step 1 Remove the dust cap from the fiber connector.

Step 2 Press the lever down to open the shutter door. Each time you press the lever, you expose a clean wiping surface.

Step 3 Insert the connector into the CLETOP cleaning cassette slot, rotate one quarter turn, and gently swipe downwards.

Step 4 Use an inspection microscope to inspect each fiber connector for dirt, cracks, or scratches. If the connector is not clean, repeat Steps 1 to 3.

Step 5 Insert the fiber connector into the applicable adapter or attach a dust cap to the fiber connector.

Note If you must replace a dust cap on a connector, first verify that the dust cap is clean. To clean the dust cap, wipe the outside of the cap using a dry, lint-free wipe and the inside of the dust cap using a CLETOP stick swab (14100400).

Step 6 Return to your originating procedure (NTP).

DLP-G263 Clean the Fiber Adapters

Purpose	This task cleans the fiber adapters.
Tools/Equipment	CLETOP stick swab
Prerequisite Procedures	None
Required/As Needed	Required
Onsite/Remote	Onsite
Security Level	None

Step 1 Remove the dust plug from the fiber adapter.

Step 2 Insert a CLETOP stick swab (14100400) into the adapter opening and rotate the swab.

Step 3 Place dust plugs on the fiber adapters when not in use.

Step 4 Return to your originating procedure (NTP).

NTP-G116 Replace the Fan-Tray Assembly

Purpose	This procedure replaces a malfunctioning fan-tray assembly.
Tools/Equipment	None
Prerequisite Procedures	None
Required/As Needed	As needed
Onsite/Remote	Onsite
Security Level	None

Caution The 15454-FTA3 fan-tray assembly can only be installed in ONS 15454 R3.1 and later shelf assemblies (15454-SA-ANSI, P/N: 800-19857; 15454-SA-HD, P/N: 800-24848). It includes a pin that does not allow it to be installed in ONS 15454 shelf assemblies released before ONS 15454 R3.1 (15454-SA-NEBS3E, 15454-SA-NEBS3, and 15454-SA-R1, P/N: 800-07149). Equipment damage can result from attempting to install the 15454-FTA3 in a incompatible shelf assembly.

Caution Do not force a fan-tray assembly into place. Doing so can damage the connectors on the fan tray and/or the connectors on the backplane.

Note To replace the fan-tray assembly (FTA), it is not necessary to move any of the cable management facilities.

Step 1 Review Table 11-3 (ANSI) or Table 11-4 (ETSI) to ensure that you have compatible components when replacing the fan-tray assembly. Note the alarms that will be generated when an incompatibility occurs.

Note If you need to determine the hardware that has been installed on a node, click the Inventory tab in node view.

Table 11-3 Incompatibility Alarms for ONS 15454 ANSI

Shelf Assembly[1]	Fan Tray[2]	AIP[3]	10G Cards[4]	Ethernet Cards[5]	Alarms
—	—	No fuse	—	—	Mismatch of Equipment Attributes (MEA) on alarm interface panel (AIP)
NEBS3E or NEBS3	2A	2A	No	—	None
NEBS3E or NEBS3	2A	2A	Yes	—	MEA on 10G
NEBS3E or NEBS3	2A	5A	No	—	None
NEBS3E or NEBS3	2A	5A	Yes	—	MEA on 10G
ANSI or HD	2A	2A	No	—	None

Table 11-3 Incompatibility Alarms for ONS 15454 ANSI (continued)

Shelf Assembly[1]	Fan Tray[2]	AIP[3]	10G Cards[4]	Ethernet Cards[5]	Alarms
ANSI or HD	2A	2A	Yes	2.5G compatible	MEA on fan tray, AIP, and Ethernet
ANSI or HD	2A	2A	Yes	10G compatible	MEA on fan tray and AIP
ANSI or HD	2A	5A	No	Either	None
ANSI or HD	2A	5A	Yes	2.5G compatible	MEA on fan tray and Ethernet
ANSI or HD	2A	5A	Yes	10G compatible	MEA on fan tray
ANSI or HD	5A	2A	No	Either	MEA on AIP
ANSI or HD	5A	2A	Yes	2.5G compatible	MEA on AIP and Ethernet
ANSI or HD	5A	2A	Yes	10G compatible	MEA on AIP
ANSI or HD	5A	5A	No	Either	None
ANSI or HD	5A	5A	Yes	Either	None

1. 15454-SA-NEBS3E (P/N: 800-07149-xx) or 15454-SA-NEBS3 (P/N: 800-06741-xx) = shelf assemblies released before ONS 15454 Release 3.1
   15454-SA-ANSI (P/N: 800-19857-01) = ONS 15454 Release 3.1 and later shelf assembly
   15454-SA-HD (P/N: 800-24848) = ONS 15454 Release 3.1 and later shelf assembly
2. 5A Fan Tray = 15454-FTA3 (P/N: 800-19858-xx) or 15454-FTA3-T (P/N: 800-21448-xx)
   2A Fan Tray = 15454-FTA2 (P/Ns: 800-07145-xx, 800-07385-xx, 800-19591-xx, 800-19590-xx)
3. 5A AIP (P/N: 73-7665-01), 2A AIP (P/N: 73-5262-01)
4. 10G cards = XC-10G, OC-192, OC-48 AS
5. 2.5G compatible Ethernet cards = E1000-T, E1000-2, E1000T-G, E10002-G, G1000-4, G1K-4
   10G compatible Ethernet cards = E1000T-G, E10002-G, G1000-4, G1K-4, ML100T-12, ML1000-2

Table 11-4 Incompatibility Alarms for ONS 15454 ETSI

Shelf Assembly [1]	Fan Tray[2]	10G Cards[3]	Ethernet Cards[4]	Alarms
15454E-SA-ETSI	2A	No	—	None
15454E-SA-ETSI	2A	Yes	—	MEA on 10G
15454E-SA-ETSI	2A	No	—	None
15454E-SA-ETSI	2A	Yes	—	MEA on 10G
15454E-SA-ETSI	5A	No	—	MEA on fan tray
15454E-SA-ETSI	5A	Yes	—	MEA on fan tray and 10G cards
15454E-SA-ETSI	5A	No	—	None
15454E-SA-ETSI	5A	Yes	—	MEA on 10G
ETSI	2A	No	—	None
ETSI	2A	Yes	2.5G compatible	MEA on fan tray or Ethernet
ETSI	2A	Yes	10G compatible	MEA on fan tray

Table 11-4 Incompatibility Alarms for ONS 15454 ETSI (continued)

Shelf Assembly [1]	Fan Tray[2]	10G Cards[3]	Ethernet Cards[4]	Alarms
ETSI	2A	No	Either	None
ETSI	2A	Yes	2.5G compatible	MEA on fan tray, Ethernet
ETSI	2A	Yes	10G compatible	MEA on fan tray
ETSI	5A	Yes	2.5G compatible	MEA on Ethernet
ETSI	5A	No	Either	None
ETSI	5A	Yes	Either	None

1. 15454-SA-ETSI (P/N: 800-08708-XX) = ONS 15454 SDH Release 3.3 and later shelf assembly
2. 5A Fan Tray = 15454E-FTA-60V
   2A Fan Tray = 15454E-FTA-48V
3. 10G cards = XC-10G, XC-VXL-10G, STM-64, STM-16 AS
4. 2.5G compatible Ethernet cards = E1000-T, E1000-2, E1000T-G, E10002-G, G1000-4, G1K-4
   10G compatible Ethernet cards = E1000T-G, E10002-G, G1000-4, G1K-4, ML100T-12, ML1000-2

Step 2 Open the front door of the shelf assembly. If the shelf assembly does not have a front door, continue with Step 4.

a. Open the front door lock.

The ONS 15454 comes with a pinned hex key for locking and unlocking the front door. Turn the key counterclockwise to unlock the door and clockwise to lock it.

b. Press the door button to release the latch.

c. Swing the door open.

Step 3 Remove the front door (optional). If you do not want to remove the door, proceed to Step 4.

a. Detach the ground strap from either the door or the chassis by removing one of the Kepnuts.

b. Place the Kepnut back on the stud after the ground strap is removed to avoid misplacement.

c. Secure the dangling end of the ground strap to the door or chassis with tape.

Step 4 Push the outer side of the handles on the fan-tray assembly to expose the handles.

Step 5 Fold out the retractable handles at the outside edges of the fan tray.

Step 6 Pull the handles and slide the fan-tray assembly one inch (25.4 mm) out of the shelf assembly and wait until the fans stop.

Step 7 When the fans have stopped, pull the fan-tray assembly completely out of the shelf assembly. Figure 11-9 shows the location of the fan tray on the ONS 15454 ANSI shelf.

Figure 11-9 Removing or Replacing the Fan-Tray Assembly (Front Door Removed) (ANSI)

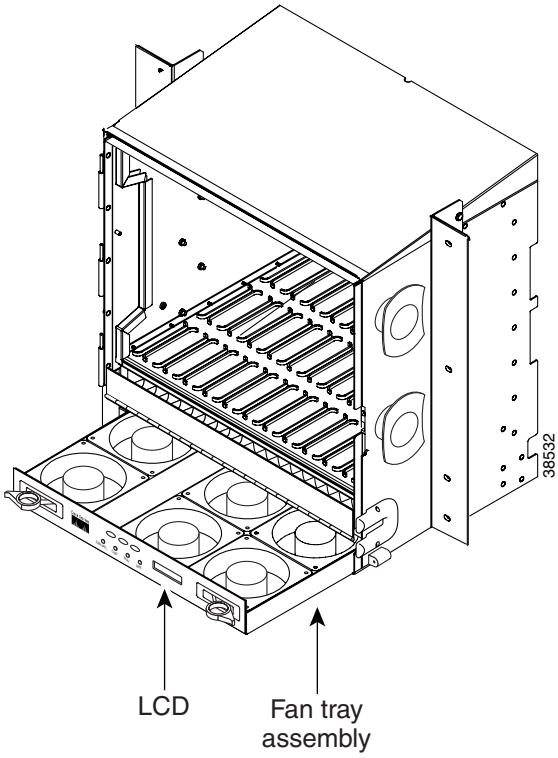

Figure 11-10 shows the location of the fan tray on the ONS 15454 ETSI shelf.

Figure 11-10 Removing or Replacing the Fan-Tray Assembly (Front Door Removed) (ETSI)

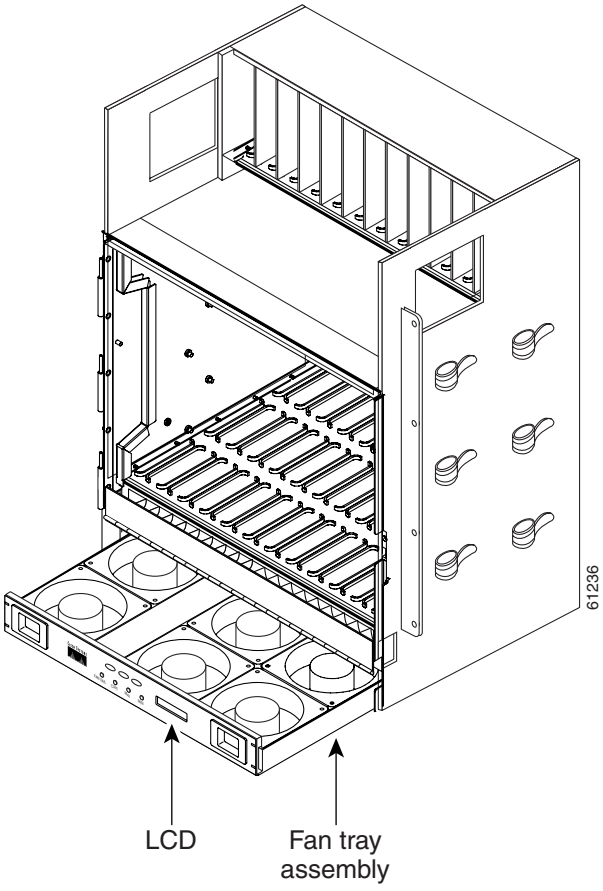

Step 8 If you are replacing the fan-tray air filter and it is installed beneath the fan-tray assembly, slide the existing air filter out of the shelf assembly and replace it before replacing the fan-tray assembly.

If you are replacing the fan-tray air filter and it is installed in the external bottom bracket (ANSI shelf only), you can slide the existing air filter out of the bracket and replace it at anytime. For more information on the fan-tray air filter, see the "NTP-G114 Inspect, Clean, and Replace the Air Filter" procedure on page 11-29.

Step 9 Slide the new fan tray into the shelf assembly until the electrical plug at the rear of the tray plugs into the corresponding receptacle on the backplane.

Step 10 To verify that the tray has plugged into the backplane, check that the LCD on the front of the fan tray is activated.

Step 11 If you replace the door on an ANSI shelf, be sure to reattach the ground strap.

Stop. You have completed this procedure.

NTP-G117 Replace the ANSI Shelf Alarm Interface Panel

Purpose	This procedure replaces the alarm interface panel (AIP) on the ONS 15454 ANSI shelf assembly.
Tools/Equipment	#2 Phillips screwdriver
Prerequisite Procedures	None
Required/As Needed	As needed
Onsite/Remote	Onsite or remote
Security Level	Provisioning or higher

Caution Do not use a 2A AIP with a 5A fan-tray assembly; doing so will cause a blown fuse on the AIP.

Caution Always use the supplied ESD wristband when working with a powered ONS 15454. Plug the wristband cable into the ESD jack located on the lower-right outside edge of the shelf assembly.

Caution Do not perform this procedure on a node with live traffic. Hot-swapping the AIP can affect traffic and result in a loss of data. For assistance with AIP replacement, contact Cisco TAC at (800) 553-2447.

Step 1 Review Table 11-3 on page 11-35 to ensure that you have compatible components when replacing the fan-tray assembly and note the alarms that will occur when an incompatibility occurs.

Step 2 Ensure that all nodes in the affected network are running the same software version before replacing the AIP and repairing circuits:

a. In network view, click the **Maintenance > Software** tabs. The working software version for each node is listed in the Working Version column.

b. If you need to upgrade the software on a node, refer to the release-specific software upgrade document. No hardware should be changed or circuit repair performed until after the software upgrade is complete. If you do not need to upgrade software or have completed the software upgrade, proceed to Step 3.

Step 3 Record the MAC address of the old AIP:

a. Log into the node where you will replace the AIP. See the "DLP-G46 Log into CTC" task on page 2-25.

b. In node view, click the **Provisioning > Network** tabs.

c. Record the MAC address shown in the General tab (Figure 11-11).

Figure 11-11 Find the MAC Address

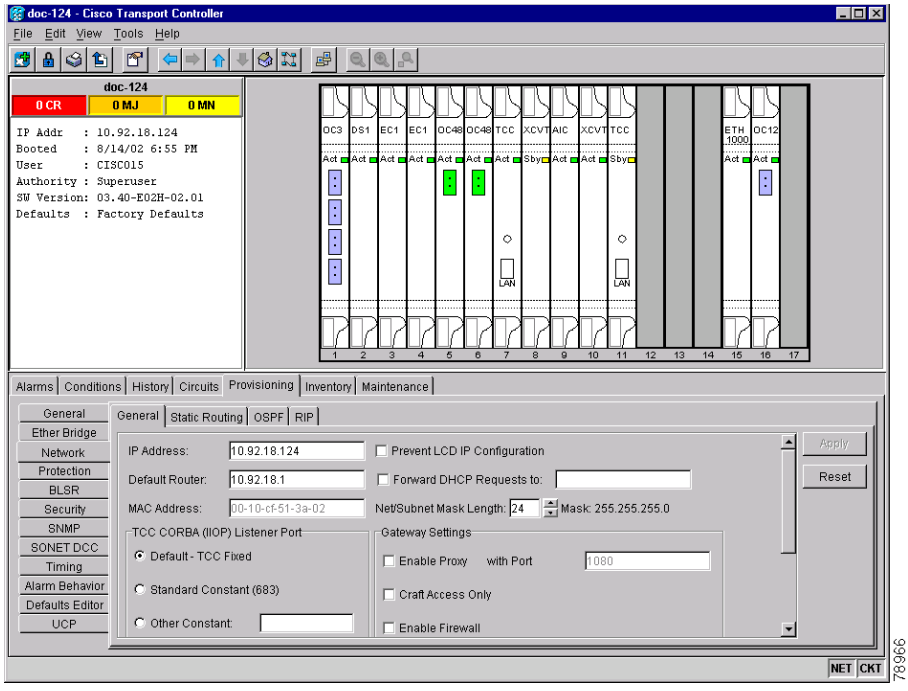

Step 4 Call Cisco TAC at (800) 553-2447 for assistance in replacing the AIP and maintaining the original MAC address.

Step 5 Unscrew the five screws that hold the lower backplane cover in place (Figure 11-12).

Figure 11-12 Lower Backplane Cover

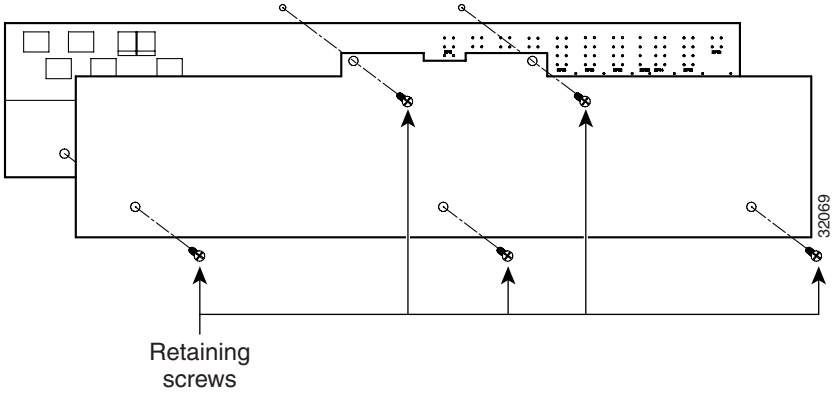

Step 6 Grip the lower backplane cover and gently pull it away from the backplane.

Step 7 Unscrew the two screws that hold the AIP cover in place.

Step 8 Grip the cover and gently pull away from the backplane.

Note On the 15454-SA-HD (P/N: 800-24848), 15454-SA-NEBS3E, 15454-SA-NEBS3, and 15454-SA-R1 (P/N: 800-07149) shelves, the AIP cover is clear plastic. On the 15454-SA-ANSI shelf (P/N: 800-19857), the AIP cover is metal.

Step 9 Grip the AIP and gently pull it away from the backplane.

Step 10 Disconnect the fan-tray assembly power cable from the AIP.

Step 11 Set the old AIP aside for return to Cisco.

Caution The type of shelf the AIP resides in determines the version of AIP that should replace the failed AIP. The 15454-SA-ANSI shelf (P/N: 800-19857) and 15454-SA-HD (P/N: 800-24848) currently use the 5A AIP, (P/N: 73-7665-01). The 15454-SA-NEBS3E, 15454-SA-NEBS3, and 15454-SA-R1 (P/N: 800-07149) shelves and earlier use the 2A AIP (P/N: 73-5262-01).

Caution Do not put a 2A AIP (P/N: 73-5262-01) into a 15454-SA-ANSI (P/N: 800-19857) or 15454-SA-HD (P/N: 800-24848) shelf; doing so will cause a blown fuse on the AIP.

Step 12 Attach the fan-tray assembly power cable to the new AIP.

Step 13 Place the new AIP on the backplane by plugging the panel into the backplane using the DIN connector.

Step 14 Replace the AIP cover over the AIP and secure the cover with the two screws.

Step 15 Replace the lower backplane cover and secure the cover with the five screws.

Step 16 In node view, click the **Provisioning > Network** tabs.

Caution Cisco recommends that TCC2 card resets be performed in a maintenance window to avoid any potential service disruptions.

Step 17 Reset the standby TCC2 card:

- **a.** Right-click the standby TCC2 card and choose **Reset Card**.
- **b.** Click **Yes** in the Resetting Card dialog box. As the card resets, a loading (Ldg) indication appears on the card in CTC.

Note The reset takes approximately five minutes. Do not perform any other steps until the reset is complete.

Step 18 Complete the "DLP-G250 Reset the TCC2 Card" task on page 11-10 to reset the active TCC2 card.

Step 19 From the **File** drop-down list, choose **Exit** to exit the CTC session.

Step 20 Log back into the node. At the Login dialog box, choose **(None)** from the Additional Nodes drop-down list.

Step 21 Record the new MAC address:

- **a.** In node view, click the **Provisioning > Network** tabs.
- **b.** Record the MAC address shown in the General tab.

Step 22 In node view, click the **Circuits** tab. Note that all circuits listed have a status of PARTIAL.

Step 23 In node view, choose **Repair Circuits** from the **Tools** drop-down list. The Circuit Repair dialog box appears.

Step 24 Read the instructions in the Circuit Repair dialog box (Figure 11-13). If all the steps in the dialog box have been completed, click **Next**. Ensure that you have the old and new MAC addresses.

Figure 11-13 Repairing Circuits

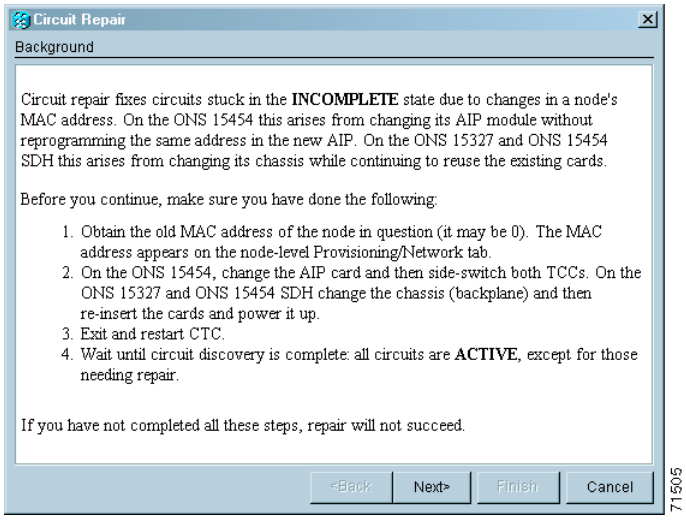

Step 25 The Node MAC Addresses dialog box appears (Figure 11-14):

a. From the Node drop-down list, choose the name of the node where you replaced the AIP.

b. In the Old MAC Address field, enter the old MAC address that was recorded in Step 3.

c. Click **Next**.

Figure 11-14 Recording the Old MAC Address Before Replacing the AIP

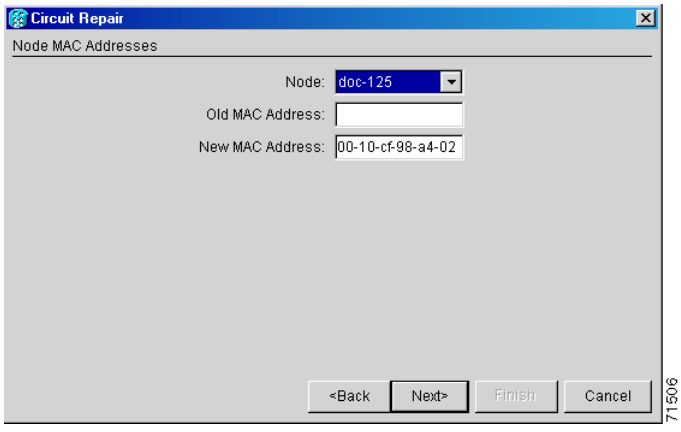

Step 26 The Repair Circuits dialog box appears (Figure 11-15). Read the information in the dialog box and click **Finish**.

Figure 11-15 Circuit Repair Information

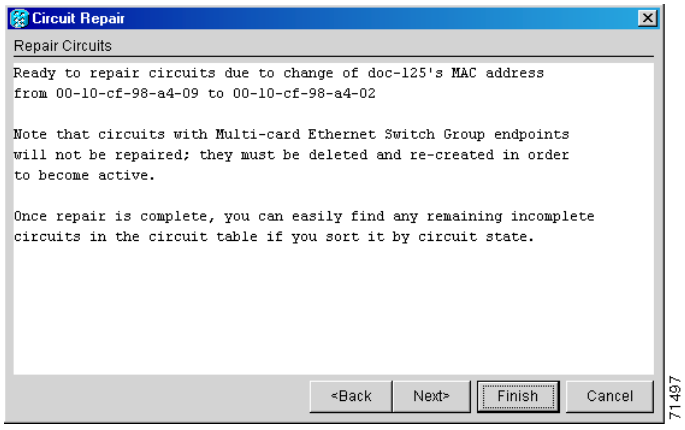

Note The CTC session freezes until all circuits are repaired. Circuit repair can take up to five minutes or more depending on the number of circuits provisioned.

When the circuit repair is complete, the Circuits Repaired dialog box appears.

Step 27 Click **OK**.

Step 28 In the node view of the new node, click the **Circuits** tab. Check to ensure that all circuits listed have a status of DISCOVERED. If all circuits listed are not DISCOVERED, call the Cisco TAC at (800) 553-2447 to open a Return Material Authorization (RMA).

Stop. You have completed this procedure.

NTP-G118 Replace the ANSI Shelf Plastic Lower Backplane Cover

Purpose	This procedure replaces the plastic cover located at the bottom rear of the ONS 15454 ANSI shelf.
Tools/Equipment	Phillips screwdriver
Prerequisite Procedures	None
Required/As Needed	As needed
Onsite/Remote	Onsite
Security Level	None

Step 1 Use the Phillips screwdriver to unscrew the five retaining screws that hold the metal cover in place.

Step 2 Grasp the metal cover on each side.

Step 3 Gently pull the metal cover away from the backplane.

Step 4 Place the plastic cover against the shelf assembly and align the screw holes on the cover and the shelf assembly (Figure 11-16).

Figure 11-16 Attaching Plastic Lower Backplane Cover

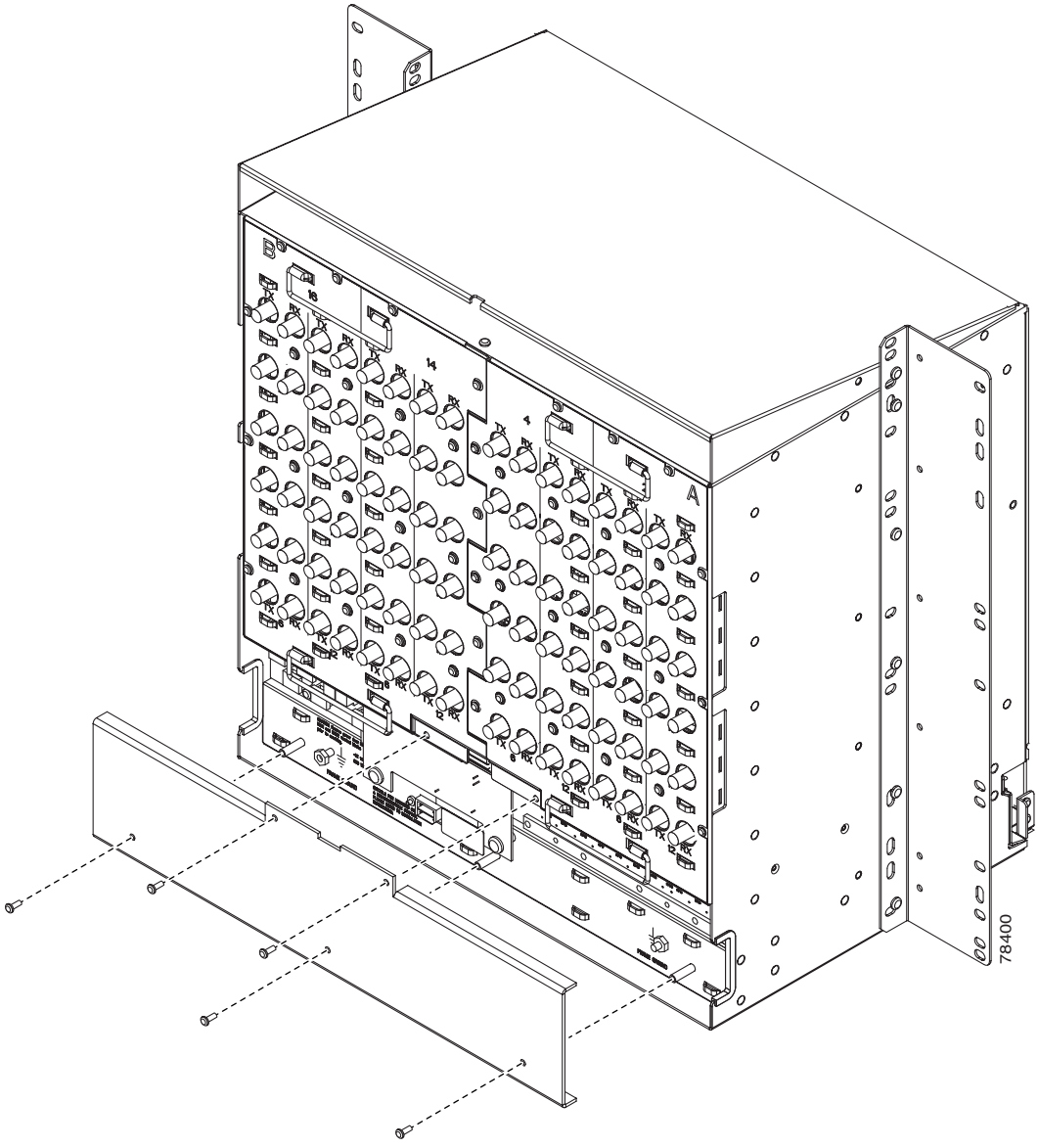

Step 5 Tighten the five retaining screws that hold the plastic cover in place.

Stop. You have completed this procedure.

Power Down the Node

This chapter explains how to power down a node and stop all node activity on the Cisco ONS 15454 ANSI or ETSI.

NTP-G119 Power Down the Node

Purpose	This procedure stops all node activity.
Tools/Equipment	None
Prerequisite Procedures	None
Required/As Needed	As needed
Onsite/Remote	Onsite
Security Level	For software steps, provisioning level or higher is required. For hardware steps, any level is allowed.

Warning **Do not reach into a vacant slot or chassis while you install or remove a module or a fan. Exposed circuitry could constitute an energy hazard.**

Caution The following procedure is designed to minimize traffic outages when powering down nodes, but traffic will be lost if you delete and recreate circuits that passed through a working node.

Note Always use the supplied ESD wristband when working with the Cisco ONS 15454. Plug the wristband into the ESD jack located on the fan-tray assembly or on the lower right outside edge of the shelf on the NEBS 3 shelf assembly. To access the ESD plug on the NEBS 3 shelf assembly, open the front door of the Cisco ONS 15454. The front door is grounded to prevent electrical shock.

Step 1 Identify the node that you want to power down. If no cards are installed, go to Step 16. If cards are installed, log into the node. See the "DLP-G46 Log into CTC" task on page 2-25 for instructions.

Step 2 In node view, choose **Go to Network View** from the View menu.

Step 3 Verify that the node is not connected to a network.

a. If the node is part of a Software R4.7 or later Multi-Service Transport Platform (MSTP) configuration, consult your network administrator to remove the node from the network. Continue with Step 4.

b. If the node is not connected to a working network and the current configurations are no longer required, proceed to Step 4.

Note The MSTP and the fiber spans connected around it must be disconnected from the network for work to continue. This is to prevent the accidental disconnection of wavelengths that pass through the shelf. A good indication that the shelf has been disconnected from the network is optical service channel (OSC) alarms, or no OSC channels provisioned.

Note Current configurations will be saved if Steps 4 to 16 are skipped.

Step 4 In node view, click the **Circuits** tab and verify that no circuits appear, then proceed to Step 5. If circuits appear, delete all the circuits that originate or terminate in the node. Complete the "DLP-G106 Delete Optical Channel Network Connections" task on page 6-11 or the "DLP-G112 Delete Overhead Circuits" task on page 6-18 as needed.

Note When deleting circuits from a node, make sure that the node is not connected to any network.

Step 5 In node view, click the **Provisioning > Protection** tabs and delete all protection groups:

a. Click the protection group that needs to be deleted and click **Delete**.

b. Click **Yes**.

Repeat until no protection groups appear.

Step 6 In node view, click the **Provisioning > Comm Channels** tabs and delete all communications channel terminations:

a. Click the section data communications channel (SDCC), line data communications channel (LDCC), generic communications channel (GCC), or OSC termination that needs to be deleted and click **Delete**.

b. Click **Yes**.

Repeat until no SDCC, LDCC, GCC, or OSC terminations are present.

Note Before deleting the OSC termination, make sure the Ring ID is deleted. Click the **Provisioning > Comm Channels > OSC** tabs. Select the Ring ID and click **Delete**.

Step 7 Before deleting any installed MSTP cards, the optical patch cords have to be deleted. In the node view, click **Provisioning > WDM-ANS > Connections** tabs.

a. Select all the connections and click **Delete**.

b. Click **Yes**.

Step 8 For each installed MSTP channel-bearing card (AD-1C-xx.x, AD-2C-xx.x, and AD-4C-xx.x, where xx.x refers to the specific wavelengths), make sure all lines and bands are in the Out-of-Service and Management, Disabled (OOS-MA,DSBLD [ANSI]) or Locked-enabled,disabled (ETSI) service state:

a. In the card view, click the **Provisioning > Optical Line > Parameters** tabs.

b. In the Admin State column for each line, make sure that **OOS,DSBLD** (ANSI) or **Locked,disabled** (ETSI) is selected.

c. Click the **Provisioning > Optical Chn > Parameters** tabs.

d. In the Admin State column for each line, make sure that **OOS,DSBLD/Locked,disabled** is selected.

Step 9 For each installed MSTP band-bearing card (AD-1B-xx.x and AD-4B-xx.x, where xx.x refers to the specific wavelengths), make sure all lines and bands are in the OOS-MA,DSBLD/Locked-enabled,disabled service state:

a. In the card view, click the **Provisioning > Optical Line > Parameters** tabs.

b. In the Admin State column for each line, make sure that **OOS,DSBLD/Locked,disabled** is selected.

c. Click the **Provisioning > Optical Band > Parameters** tabs.

d. In the Admin State column for each line, make sure that **OOS,DSBLD/Locked,disabled** is selected.

Step 10 For each installed dense wavelength division multiplexing (DWDM) transponder (TXP), muxponder (MXP), multiplexer, demultiplexer or amplifier card (32MUX-O, 32DMX-0, 32DMX, 32WSS, 4MD-xx.x, OPT-BST, OPT-PRE, TXP_MR_10G, TXP_MR_10E, TXP_MR_2.5G, TXPP_MR_2.5G, MXP_2.5G_10G, MXP_2.5G_10E, MXP_MR_2.5G, MXPP_MR_2.5G), make sure all lines are in the OOS-MA,DSBLD/Locked-enabled,disabled service state:

a. In card view, click the appropriate tab depending on the card:

- For MXP_2.5G_10G, TXP_MR_10G, TXP_MR_10E cards, click the **Provisioning > Line > SONET** tabs if the card was provisioned for a SONET payload, or the **Provisioning > Line > SDH** tabs if the card was provisioned for an SDH payload.
- For TXP_MR_2.5G, TXPP_MR_2.5G, and MXPP_MR_2.5G cards, click the **Provisioning > Line > OC48** tabs.
- For MXP_2.5G_10E cards, click the **Provisioning > Line > Trunk** tabs.
- For MXP_MR_2.5G cards, click the **Provisioning > Line > Client** tabs.
- For 32MUX-O, 32DMX-0, 32DMX, 32WSS, OPT-BST, OPT-PRE cards, click the **Provisioning > Optical Line > Parameters** tabs.
- For 32DMX and 32DMX-O cards, click the **Provisioning > Optical Chn > Parameters** tabs.
- For 4MD-xx.x cards, click the **Provisioning > Optical Band > Parameters** tabs.
- For OPT-BST and OPT-PRE cards, click the **Provisioning > Optical Ampli Line > Parameters** tabs.

b. In the Admin State column for each line, make sure that **OOS,DSBLD/Locked,disabled** is selected.

c. Repeat Steps a and b for each installed DWDM card.

Note Ports are put in service when circuits are provisioned, and put out of service when circuits are deleted. When circuits are deleted the Admin State displays as OOS,DSBLD/Locked,disabled and the Service State displays OOS-MA,DSBLD/Locked-enabled,disabled.

Step 11 Remove all fiber connections to the cards.

Step 12 In node view, right-click an installed card and click **Delete**.

Step 13 Click **Yes**.

Step 14 After you have deleted the card, open the card ejectors and remove it from the node.

Step 15 Repeat Step 11 through Step 14 for each installed card.

Note You cannot delete an Advanced Timing, Communications, and Control (TCC2) card in Cisco Transport Controller (CTC). Physically remove it after all the other cards have been deleted and removed.

Step 16 Shut off the power from the power supply that feeds the node.

Step 17 Disconnect the node from its external fuse source.

Step 18 Store all of the cards that you removed and update inventory records according to local site practice.

Stop. You have completed this procedure.

Shelf Hardware Reference

This chapter provides a description of Cisco ONS 15454 hardware for the ANSI and ETSI shelf assemblies. For card descriptions, see Chapter 14, "Card Reference." To install equipment, see Chapter 1, "Install the Shelf and Common Control Cards."

Note Unless otherwise specified, "ONS 15454" refers to both ANSI and ETSI shelf assemblies.

Chapter topics include:

- 13.1 Overview, page 13-2
- 13.2 ONS 15454 ANSI Rack Installation, page 13-3
- 13.3 ONS 15454 ETSI Rack Installation, page 13-7
- 13.4 FlexLayer and Y-Cable Protection, page 13-10
- 13.5 Typical DWDM Rack Layouts, page 13-16
- 13.6 Front Door, page 13-19
- 13.7 ONS 15454 ANSI Backplane Covers, page 13-26
- 13.8 ONS 15454 ETSI Front Mount Electrical Connection, page 13-30
- 13.9 ONS 15454 ANSI Alarm Expansion Panel, page 13-30
- 13.10 Cable Routing and Management, page 13-36
- 13.11 Fan-Tray Assembly, page 13-41
- 13.12 Power and Ground Description, page 13-43
- 13.13 ONS 15454 ANSI Alarm, Timing, LAN, and Craft Pin Connections, page 13-44
- 13.14 Cards and Slots, page 13-49

Note The Cisco ONS 15454 shelf assemblies are intended for use with telecommunications equipment only.

Warning **Only trained and qualified personnel should be allowed to install, replace, or service this equipment.**

Warning **This equipment must be installed and maintained by service personnel as defined by AS/NZS 3260. Incorrectly connecting this equipment to a general purpose outlet could be hazardous. The telecommunications lines must be disconnected 1) before unplugging the main power connector and/or 2) while the front door is open.**

Warning **The ONS 15454 is intended for installation in restricted access areas. A restricted access area is where access can only be gained by service personnel through the use of a special tool, lock, key, or other means of security. A restricted access area is controlled by the authority responsible for the location.**

Warning **The ONS 15454 is suitable for mounting on concrete or other non-combustible surfaces only.**

Caution Unused card slots should be filled with a blank faceplate (Cisco P/N 15454-BLANK for ANSI shelves and 15454E-BLANK for ETSI shelves). The blank faceplate ensures proper airflow when operating the ONS 15454 without the front door attached, although Cisco recommends that the front door remain attached.

13.1 Overview

This section provides an introduction to the Cisco ONS 15454 ANSI and the Cisco ONS 15454 ETSI.

Install the ONS 15454 in compliance with your local and national electrical codes:

- United States: National Fire Protection Association (NFPA) 70; United States National Electrical Code.
- Canada: Canadian Electrical Code, Part I, CSA C22.1.
- Other countries: If local and national electrical codes, are not available, refer to IEC 364, Part 1 through Part 7.

Warning **Dispose of this product according to all national laws and regulations.**

13.1.1 Cisco ONS 15454 ANSI

When installed in an equipment rack, the ONS 15454 ANSI assembly is typically connected to a fuse and alarm panel to provide centralized alarm connection points and distributed power for the ONS 15454 ANSI. Fuse and alarm panels are third-party equipment and are not described in this documentation. If you are unsure about the requirements or specifications for a fuse and alarm panel, consult the user documentation for the related equipment. The front door of the ONS 15454 ANSI allows access to the shelf assembly, fan-tray assembly, and cable-management area. The backplanes provide access to alarm contacts, external interface contacts, power terminals, and BNC/SMB connectors.

Warning **The ONS 15454 ANSI relies on the protective devices in the building installation to protect against short circuit, overcurrent, and grounding faults. Ensure that the protective devices are properly rated to protect the system, and that they comply with national and local codes.**

You can mount the ONS 15454 ANSI in a 19- or 23-inch rack (482.6 or 584.2 mm). The shelf assembly weighs approximately 55 pounds (24.94 kg) with no cards installed.

The ONS 15454 ANSI is powered using –48 VDC power. Negative, return, and ground power terminals are accessible on the backplane.

Note The ONS 15454 ANSI is designed to comply with Telcordia GR-1089-CORE Type 2 and Type 4. Install and operate the ONS 15454 ANSI only in environments that do not expose wiring or cabling to the outside plant. Acceptable applications include Central Office Environments (COEs), Electronic Equipment Enclosures (EEEs), Controlled Environment Vaults (CEVs), huts, and Customer Premise Environments (CPEs).

13.1.2 Cisco ONS 15454 ETSI

When installed in an equipment rack, the ONS 15454 ETSI assembly is typically connected to a fuse and alarm panel to provide centralized alarm connection points and distributed power for the ONS 15454 ETSI. Fuse and alarm panels are third-party equipment and are not described in this documentation. If you are unsure about the requirements or specifications for a fuse and alarm panel, consult the user documentation for the related equipment. The front door of the ONS 15454 ETSI allows access to the shelf assembly, fan-tray assembly, and cable-management area. The FMEC cover at the top of the shelf allows access to power connectors, external alarms and controls, timing input and output, and craft interface terminals.

You can mount the ONS 15454 ETSI in an ETSI rack. The shelf assembly weighs approximately 26 kg (57 pounds) with no cards installed. The shelf assembly includes a front door and a Front Mount Electrical Connection (FMEC) cover for added security, a fan tray module for cooling, and extensive cable-management space.

The ONS 15454 ETSI is powered using –48 VDC power. Negative, return, and ground power terminals are connected via the MIC-A/P and the MIC-C/T/P FMECs.

13.2 ONS 15454 ANSI Rack Installation

Warning **To prevent the equipment from overheating, do not operate it in an area that exceeds the maximum recommended ambient temperature of 131°F (55°C) unless configured for industrial temperature (I-temp). All I-temp rated components are –40°F to +149°F (–40°C to +65°C). To prevent airflow restriction, allow at least 1 inch (25.4 mm) of clearance around the ventilation openings.**

The ONS 15454 ANSI is mounted in a 19- or 23-in. (482.6- or 584.2-mm) equipment rack. The shelf assembly projects five inches (127 mm) from the front of the rack. It mounts in both Electronic Industries Alliance (EIA) standard and Telcordia-standard racks. The shelf assembly is a total of 17 inches (431.8 mm) wide with no mounting ears attached. Ring runs are not provided by Cisco and might hinder side-by-side installation of shelves where space is limited.

The ONS 15454 ANSI measures 18.5 inches (469.9 mm) high, 19 or 23 inches (482.6 or 584.2 mm) wide (depending on which way the mounting ears are attached), and 12 inches (304.8 mm) deep. You can install up to four ONS 15454 ANSIs in a seven-foot (2133.6 mm) equipment rack. The ONS 15454 ANSI must have one inch (25.4 mm) of airspace below the installed shelf assembly to allow air flow to the fan intake. If a second ONS 15454 ANSI is installed underneath the shelf assembly, the air ramp on top of the lower shelf assembly provides the air spacing needed and should not be modified in any way. Figure 13-1 shows the dimensions of the ONS 15454 ANSI.

Note A 10-Gbps-compatible shelf assembly (15454-SA-ANSI or 15454-SA-HD) and fan-tray assembly (15454-FTA3 or 15454-FTA3-T) are required if ONS 15454 ANSI 10-Gbps Cross-Connect (XC10G) cards are installed in the shelf.

Warning **The ONS 15454 ANSI should be installed in the lower rack position or mounted above another ONS 15454 ANSI shelf assembly.**

Warning **The ONS 15454 ANSI must have 1 inch (25.4 mm) of airspace below the installed shelf assembly to allow air flow to the fan intake. The air ramp (the angled piece of sheet metal on top of the shelf assembly) provides this spacing and should not be modified in any way.**

Figure 13-1 Cisco ONS 15454 ANSI Dimensions

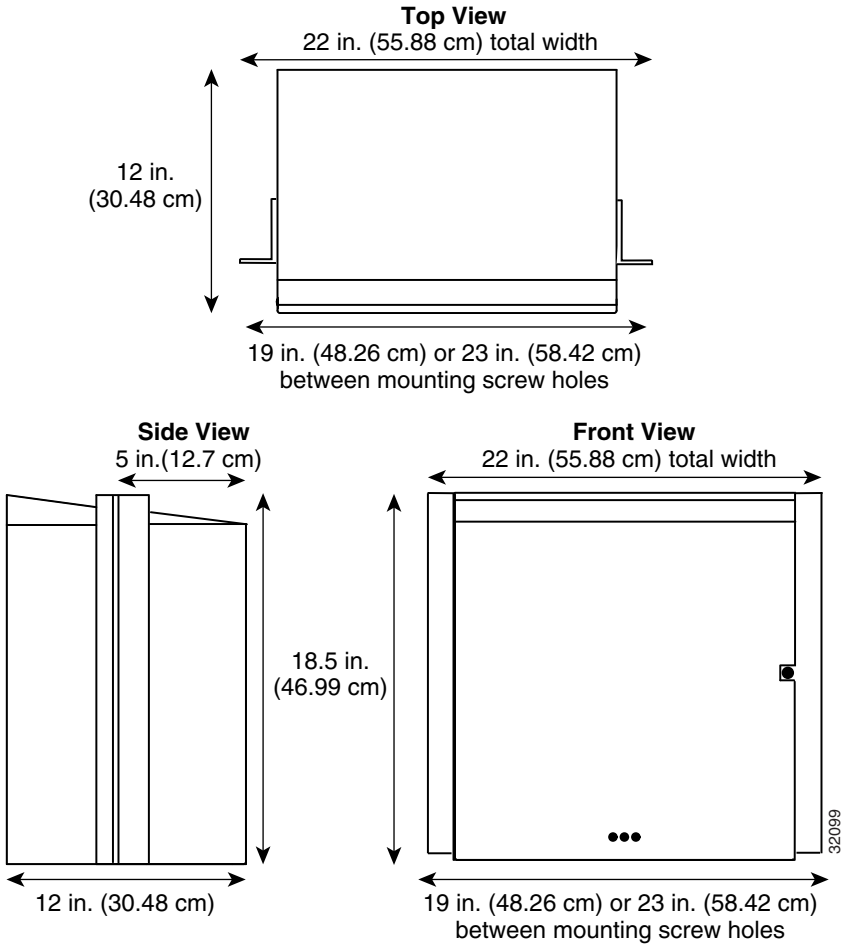

13.2.1 Reversible Mounting Bracket

Caution Use only the fastening hardware provided with the ONS 15454 ANSI shelf to prevent loosening, deterioration, and electromechanical corrosion of the hardware and joined material.

Caution When mounting the ONS 15454 ANSI shelf in a frame with a nonconductive coating (such as paint, lacquer, or enamel) either use the thread-forming screws provided with the ONS 15454 ANSI shipping kit, or remove the coating from the threads to ensure electrical continuity.

The shelf assembly comes preset for installation in a 23-inch (584.2 mm) rack, but you can reverse the mounting bracket to fit the smaller 19-inch (482.6 mm) rack.

13.2.2 Mounting a Single Node

Mounting the ONS 15454 ANSI shelf in a rack requires a minimum of 18.5 inches (469.9 mm) of vertical rack space and one additional inch (25.4 mm) for air flow. To ensure the mounting is secure, use two to four #12-24 mounting screws for each side of the shelf assembly. Figure 13-2 shows the rack mounting position for the ONS 15454 ANSI shelf.

Figure 13-2 Mounting an ONS 15454 ANSI Shelf in a Rack

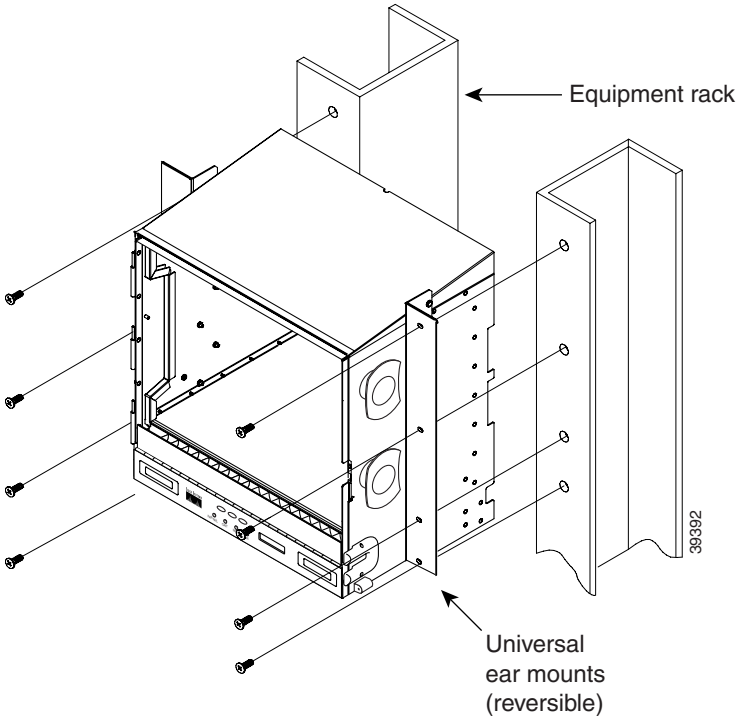

Two people should install the shelf assembly; however, one person can install it using the temporary set screws included. The shelf assembly should be empty for easier lifting. The front door can also be removed to lighten the shelf assembly.

13.2.3 Mounting Multiple Nodes

Most standard (Telcordia GR-63-CORE, 19-inch [482.6-mm] or 23-inch [584.2-mm]) seven-foot (2,133-mm) racks can hold four ONS 15454 ANSI shelves and a fuse and alarm panel. However, unequal flange racks are limited to three ONS 15454 ANSI shelves and a fuse and alarm panel, or four ONS 15454 ANSI shelves using a fuse and alarm panel from an adjacent rack.

If you are using the external (bottom) brackets to install the fan-tray air filter, you can install three shelf assemblies in a standard seven-foot (2.133-m) rack. If you are not using the external (bottom) brackets, you can install four shelf assemblies in a rack. The advantage of using the bottom brackets is that you can replace the filter without removing the fan tray.

13.2.4 ONS 15454 ANSI Bay Assembly

The Cisco ONS 15454 ANSI bay assembly simplifies ordering and installing the ONS 15454 ANSI shelf because it allows you to order shelf assemblies preinstalled in a seven-foot (2,133 mm) rack. The bay assembly is available in a three- or four-shelf configuration. The three-shelf configuration includes three ONS 15454 ANSI shelf assemblies, a prewired fuse and alarm panel, and two cable-management trays. The four-shelf configuration includes four ONS 15454 ANSI shelf assemblies and a prewired fuse and alarm panel. You can order optional fiber channels with either configuration. Installation procedures are included in the *Unpacking and Installing the Cisco ONS 15454 Four-Shelf and Zero-Shelf Bay Assembly* document that ships with the bay assembly.

13.3 ONS 15454 ETSI Rack Installation

Warning **To prevent the equipment from overheating, do not operate it in an area that exceeds the maximum recommended ambient temperature of 131°F (55°C) unless configured for industrial temperature (I-temp). All I-temp rated components are –40°F to +149°F (–40°C to +65°C). To prevent airflow restriction, allow at least 1 inch (25.4 mm) of clearance around the ventilation openings.**

The ONS 15454 ETSI (15454-SA-ETSI) is mounted in a 600 x 600-mm (23-inch) or 600 x 300-mm (11.8-inch) equipment cabinet/rack. The shelf assembly projects 240 mm (9.45 inches) from the front of the rack. It mounts in ETSI-standard racks. The shelf assembly is a total of 435 mm (17.35 inches) wide with no mounting ears attached. Ring runs are not provided by Cisco and might hinder side-by-side installation of shelves where space is limited.

The ONS 15454 ETSI measures 616.5 mm (24.27 inches) high, 535 mm (21.06 inches) wide, and 280 mm (11.02 inches) deep. You can install up to three ONS 15454 ETSI shelves in a seven-foot (2133.6 mm) equipment rack. The ONS 15454 ETSI must have one inch (25.4 mm) of airspace below the installed shelf assembly to allow air flow to the fan intake. If a second ONS 15454 ETSI is installed underneath the first shelf assembly, an ETSI air ramp unit must be assembled between the two shelves to ensure adequate air flow.

Figure 13-3 provides the dimensions of the ONS 15454 ETSI.

Caution The standard ETSI racks can hold three ONS 15454 ETSI shelf assemblies and two air ramps. When mounting a shelf assembly in a partially filled rack, load the rack from the bottom to the top with the heaviest component at the bottom of the rack. If the rack is provided with stabilizing devices, install the stabilizers before mounting or servicing the unit in the rack.

Caution The ONS 15454 ETSI must have 1 inch (25.4 mm) of airspace below the installed shelf assembly to allow air flow to the fan intake. The air ramp (the angled piece of sheet metal on top of the shelf assembly) provides this spacing and should not be modified in any way.

Figure 13-3 ONS 15454 ETSI Dimensions

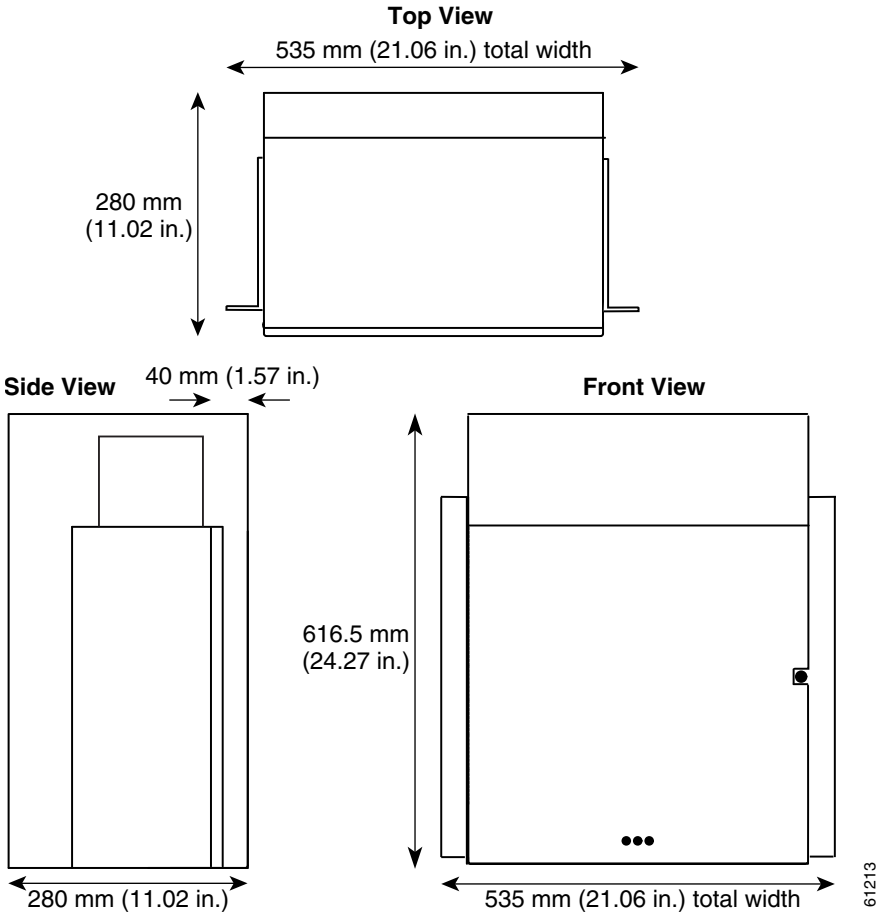

13.3.1 Mounting a Single Node

The ONS 15454 ETSI requires 616.5 mm (24.24 inch) minimum of vertical rack space and 25 mm (1 inch) below the installed shelf assembly to allow air flow to the fan intake. If a second ONS 15454 ETSI is installed above a shelf assembly, the air ramp between the shelves provides space for air flow. To ensure the mounting is secure, use two to four M6 mounting screws for each side of the shelf assembly. A shelf assembly should be mounted at the bottom of the rack if it is the only unit in the rack.

Figure 13-4 shows the rack mounting position for the ONS 15454 ETSI shelf.

Figure 13-4 Mounting an ONS 15454 ETSI Shelf in a Rack

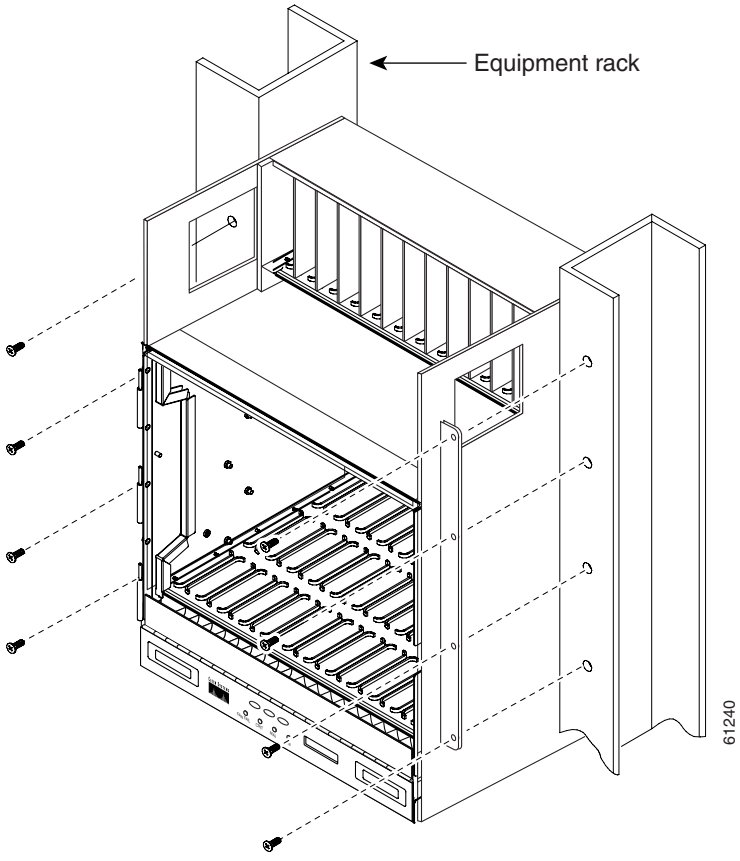

Two people should install the shelf assembly; however, one person can install it using the temporary set screws included. The shelf assembly should be empty for easier lifting. The front door can also be removed to lighten the shelf assembly.

13.3.2 Mounting Multiple Nodes

Most standard (Telcordia GR-63-CORE, 23-inch [584.2 mm]) seven-foot (2,133 mm) racks can hold three ONS 15454 ETSI shelves, two air ramps, and a fuse and alarm panel. Figure 13-5 shows a three-shelf ONS 15454 ETSI bay assembly.

Figure 13-5 Three-Shelf ONS 15454 ETSI Bay Assembly

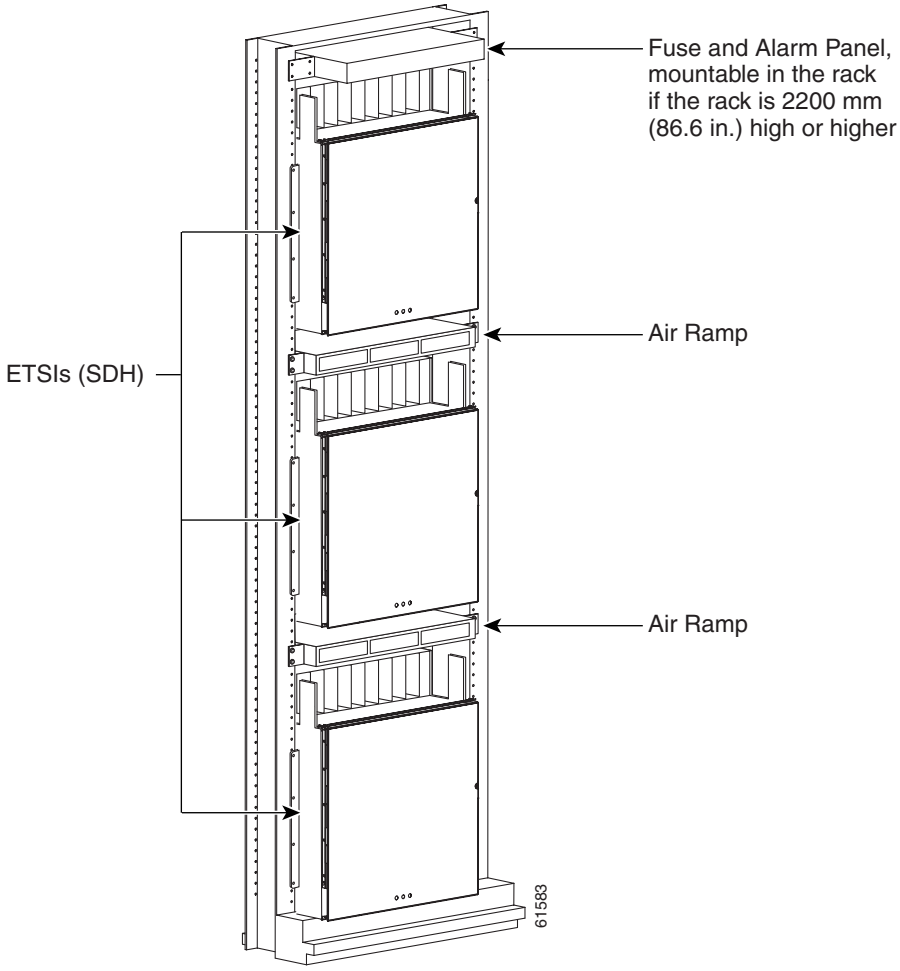

13.4 FlexLayer and Y-Cable Protection

The Cisco ONS 15454 FlexLayer DWDM system includes the following components:

- Two-channel add or drop flex module
- FlexLayer shelf assembly
- Y-cable FlexLayer module

The FlexLayer shelf assembly is 1 rack unit (RU) high and can be mounted in a 19-inch (482.6-mm) or 23-inch (584.2-mm) rack (two-way mounting brackets). The FlexLayer shelf assembly is used to house the FlexLayer and Y-Cable modules.

13.4.1 FlexLayer Modules

The two-channel add/drop FlexLayer module is a completely passive unidirectional component that allows the insertion or the extraction of two channels within the ONS 15454 channel plan. This module is used only in point-to-point, one-channel, amplified system configurations.

Sixteen specific modules are available to cover the whole 32-channel bandwidth. Table 13-1 shows how the FlexLayer add/drop modules are grouped in relation to the supported channels.

Table 13-1 ONS 15454 R4.7 100-GHz Channel Plan

ITU	Channel ID	Frequency (THz)	Wavelength (nm)	Two-Channel A/D Flex Module
59	30.3	195.9	1530.33	15216-FLB-2-31.1=
58	31.1	195.8	1531.12	
57	31.9	195.7	1531.90	15216-FLB-2-32.6=
56	32.6	195.6	1532.68	
54	34.2	195.4	1534.25	15216-FLB-2-35.0=
53	35.0	195.3	1535.04	
52	35.8	195.2	1535.82	15216-FLB-2-36.6=
51	36.6	195.1	1536.61	
49	38.1	194.9	1538.19	15216-FLB-2-38.9=
48	38.9	194.8	1538.98	
47	39.7	194.7	1539.77	15216-FLB-2-40.5=
46	40.5	194.6	1540.56	
44	42.1	194.4	1542.14	15216-FLB-2-42.9=
43	42.9	194.3	1542.94	
42	43.7	194.2	1543.73	15216-FLB-2-44.5=
41	44.5	194.1	1544.53	
39	46.1	193.9	1546.12	15216-FLB-2-46.9=
38	46.9	193.8	1546.92	
37	47.7	193.7	1547.72	15216-FLB-2-48.5=
36	48.5	193.6	1548.51	
34	50.1	193.4	1550.12	15216-FLB-2-50.9=
33	50.9	193.3	1550.92	
32	51.7	193.2	1551.72	15216-FLB-2-52.5=
31	52.5	193.1	1552.52	
29	54.1	192.9	1554.13	15216-FLB-2-54.9=
28	54.9	192.8	1554.94	
27	55.7	192.7	1555.75	15216-FLB-2-56.5=
26	56.5	192.6	1556.55	

Table 13-1 ONS 15454 R4.7 100-GHz Channel Plan (continued)

ITU	Channel ID	Frequency (THz)	Wavelength (nm)	Two-Channel A/D Flex Module
24	58.1	192.4	1558.17	15216-FLB-2-58.9=
23	58.9	192.3	1558.98	
22	59.7	192.2	1559.79	15216-FLB-2-60.6=
21	60.6	192.1	1560.61	

Figure 13-6 shows the unit functional block diagram. In Figure 13-6, the signal flows from left to right when the card is used as a drop component and from right to left when the card is used as an add component.

Figure 13-6 Two-Channel Add/Drop FlexLayer Module Block Diagram

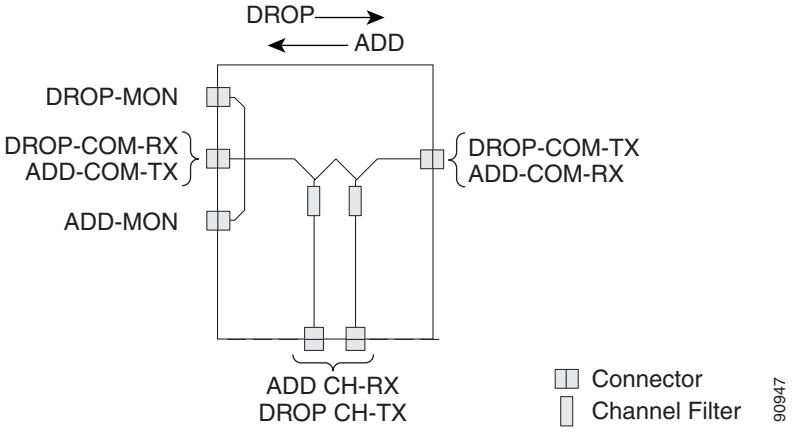

When the unit is used as a drop component, the wave-division multiplexing (WDM) composite signal coming from the DROP-COM-RX port is filtered sequentially by two filters and the filtered channels are dropped at the two DROP-CH-TX ports. The rest of the WDM composite signal is sent to the DROP-COM-TX port. A two-percent tap coupler, DROP-MON, is used to monitor the input WDM composite signal.

When the unit is used as an add component, the added channels coming from the two ADD-CH-RX ports are combined with the WDM composite signal coming from the ADD-COM-RX port. The multiplexed WDM composite signal is sent to the ADD-COM-TX port. A two-percent tap coupler, ADD-MON, is used to monitor the multiplexed WDM composite signal.

Figure 13-7 shows the physical appearance of the ONS 15454 two-channel add/drop FlexLayer module.

Figure 13-7 ONS 15454 Two-Channel Optical Add/Drop FlexLayer Module

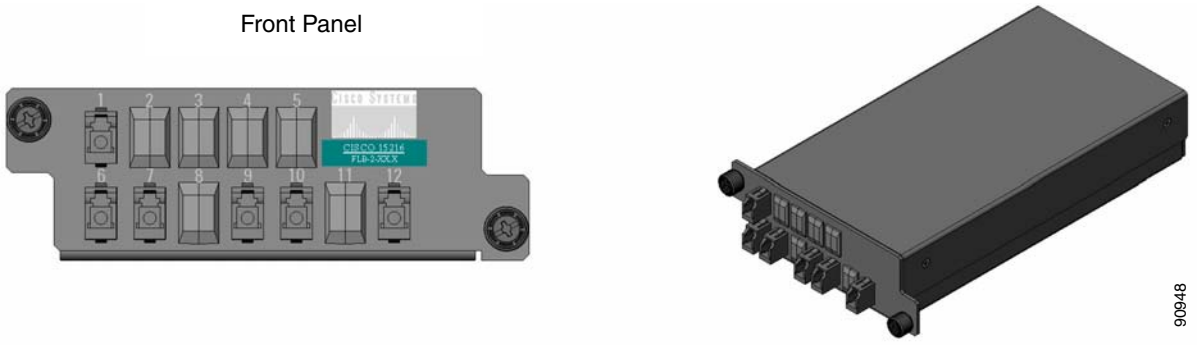

Labels are provided to show how the unit ports are mapped. It is the end user's responsibility to label the unit for its intended use (drop or add component).

Figure 13-8 shows how the connectors are mapped and labeled on the front panel when the component is used as a drop component. The COM-RX is mapped to Port 1, the COM-TX is mapped to Port 12, and the two dropped channel TX ports are mapped to Ports 9 and 10. The two-percent tap MON port is mapped to Port 6. Port 7 is not active.

Figure 13-8 Two-Channel Drop Component Connector Mapping and Labeling

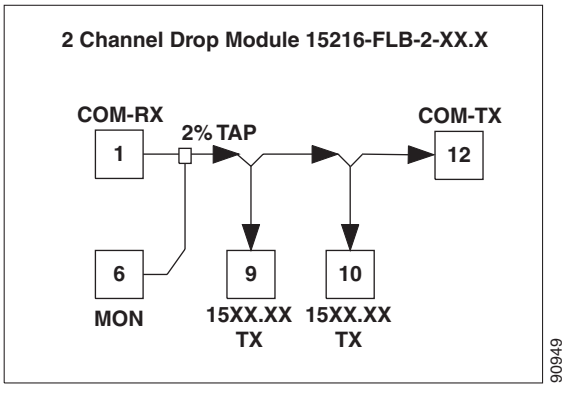

Figure 13-9 shows how the connectors are mapped and labeled in the front panel when the component is used as an add component. The COM-TX is mapped to Port 1, the COM-RX is mapped to Port 12, and the added channels are mapped to the two RX Ports 9 and 10. The two-percent tap MON port is mapped to Port 7. Port 6 is not active.

Figure 13-9 Two-Channel Add Component Connector Mapping and Labeling

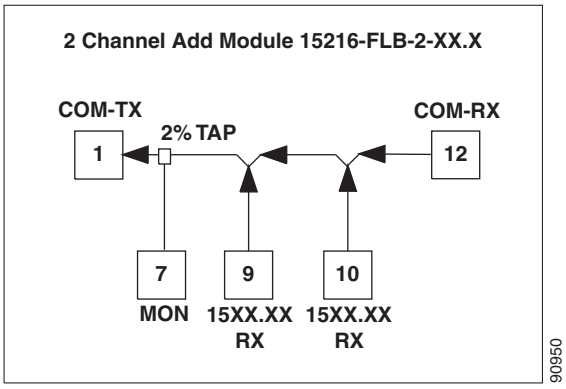

13.4.2 Y-Cable Protection Module

The Y-cable protection module is a bidirectional module. It is equipped with two passive star couplers: one that is used as a splitter and one that is used as a coupler.

Note Neither this unit nor the other modules of this equipment release can be used for video on demand (VoD) applications.

The purpose of this module is to provide Y-cable protection for transponder cards such as the ONS 15454 multirate and 10-Gbps transponders. (See Figure 13-10.) There are two versions of this unit, one for multimode applications (CS-MM-Y) and one for single-mode applications (CS-SM-Y).

Figure 13-10 Typical Y-Cable Protection Module Configuration

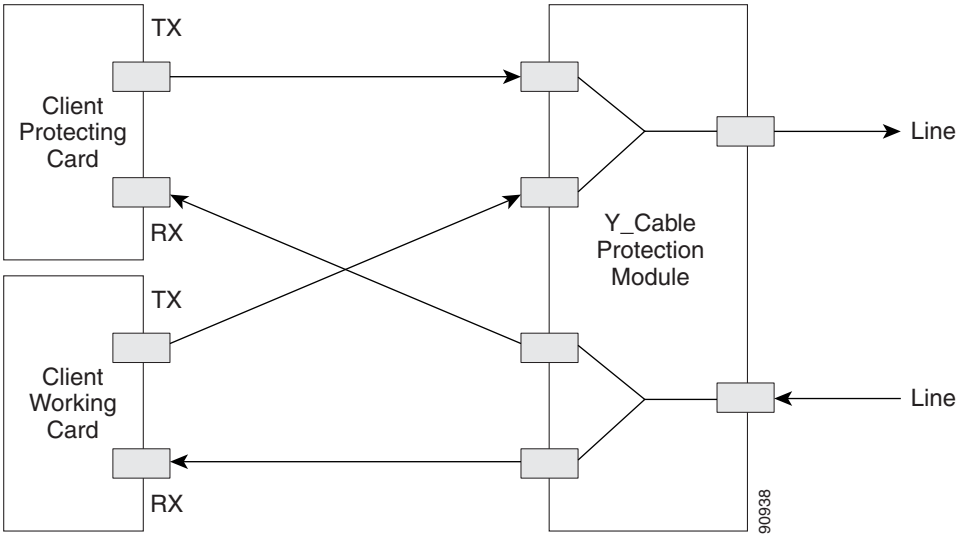

When the module is used in the coupler direction, the individual signals enter the module from the CPL-RX*n* ports and pass through a passive star coupler to the CPL-TX port.

The coupler is not meant to combine both the protect and working client card signals. The module allows a path for the working client transmit interface to connect to the network in the event the opposite interface in the protection pair should fail (the protect interface switches to the working interface).

When the module is used in the splitter direction, the signal enters the module from the SPL-RX port and is split through a passive star coupler to the SPL-TX*n* ports. This module, although designed to pass wavelengths associated with the ONS 15454 32-channel plan, is not selective to specific wavelengths (units do not filter wavelengths).

Figure 13-11 shows the unit block diagram of the Y-cable protection module.

Figure 13-11 1:2 Splitter and 2:1 Coupler (Y-Cable Protection) Module Block Diagram

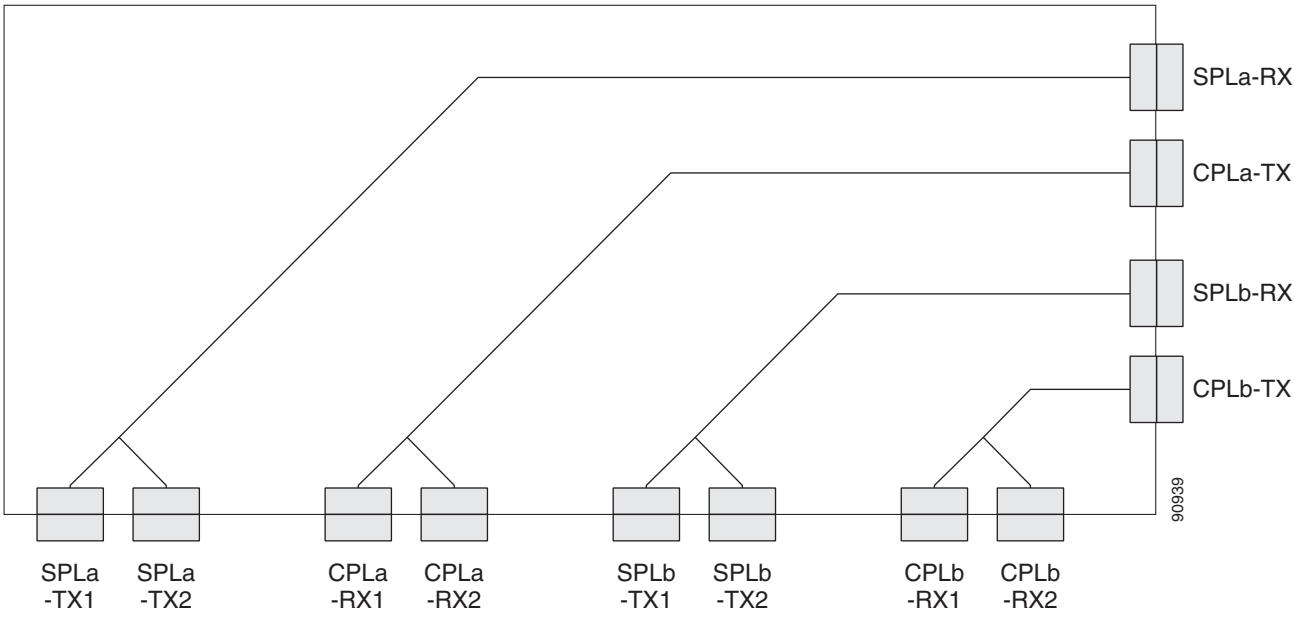

Figure 13-12 and Figure 13-13 show the physical appearance of the ONS 15454 Y-Cable Protection FlexLayer Module. This module has two versions, one for single-mode applications and the other for multimode applications.

Figure 13-12 ONS 15454 Y-Cable Protection FlexLayer Module (Single Mode)

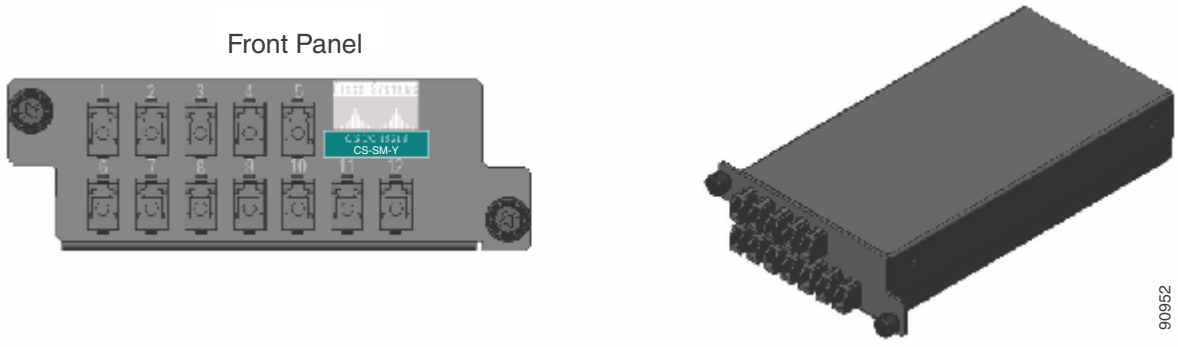

Figure 13-13 ONS 15454 Y-Cable Protection FlexLayer Module (Multimode)

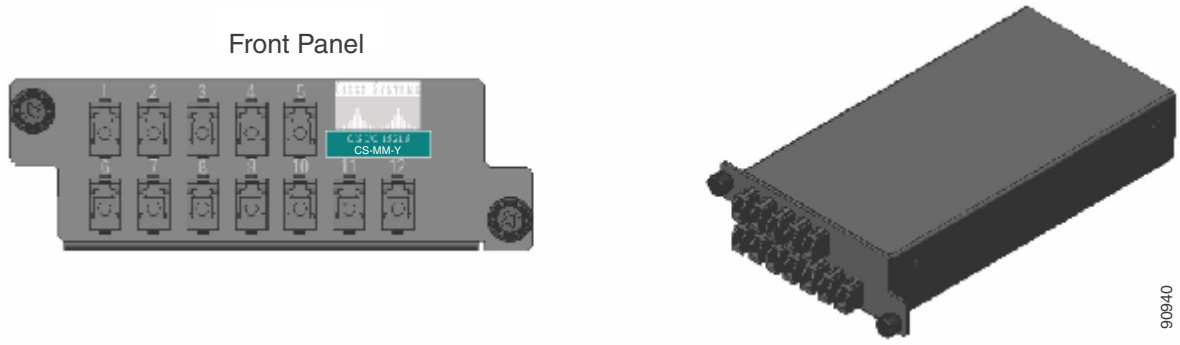

Figure 13-14 shows how the module front panel ports are mapped and labeled. The multimode unit is mapped and labeled the same as the single mode unit.

Figure 13-14 Y-Cable Protection Component Connector Mapping and Labeling

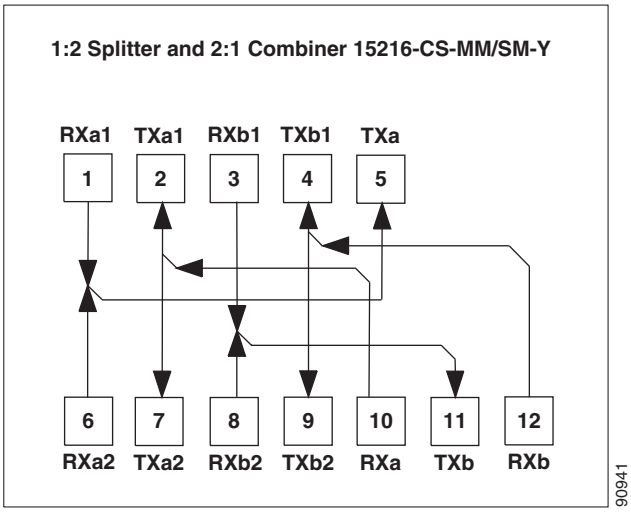

The following muxponder and transponder cards can use Y-cable protection:

- MXP_2.5_10G
- MXP_2.5_10E
- MXP_MR_2.5G
- TXP_MR_10G
- TXP_MR_10E
- TXP_MR_2.5G

13.5 Typical DWDM Rack Layouts

Typical dense wavelength division multiplexing (DWDM) applications might include:

- 3 ONS 15454 shelves

- 1 Dispersion Compensating Unit (DCU)
- 7 patch panels (or fiber storage tray[s])

Or, alternatively:

- 3 ONS 15454 shelves
- 2 DCUs
- 6 patch panels (or fiber storage tray[s])

See Figure 13-15 for a typical rack layout.

Figure 13-15 Typical DWDM Equipment Layout in an ONS 15454 ANSI Rack

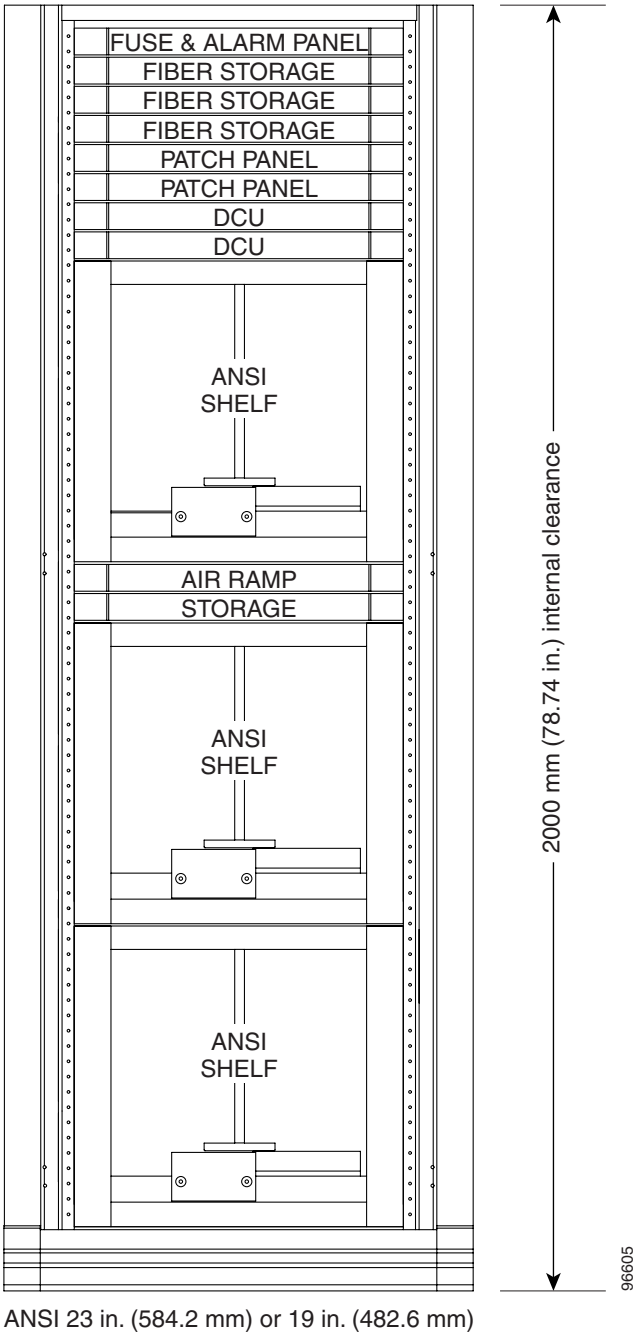

If you are installing a patch panel or fiber storage tray below the ONS 15454 shelf, you must install the air ramp between the shelf and patch panel/fiber tray or leave one rack unit (RU) space open.

13.6 Front Door

The Critical, Major, and Minor alarm LEDs visible through the front door indicate whether a critical, major, or minor alarm is present anywhere on the ONS 15454 shelf. These LEDs must be visible so technicians can quickly determine if any alarms are present on the ONS 15454 shelf or the network. You can use the LCD to further isolate alarms. The front door (Figure 13-16) provides access to the shelf assembly, cable-management tray, fan-tray assembly, and LCD screen.

Figure 13-16 The ONS 15454 Front Door

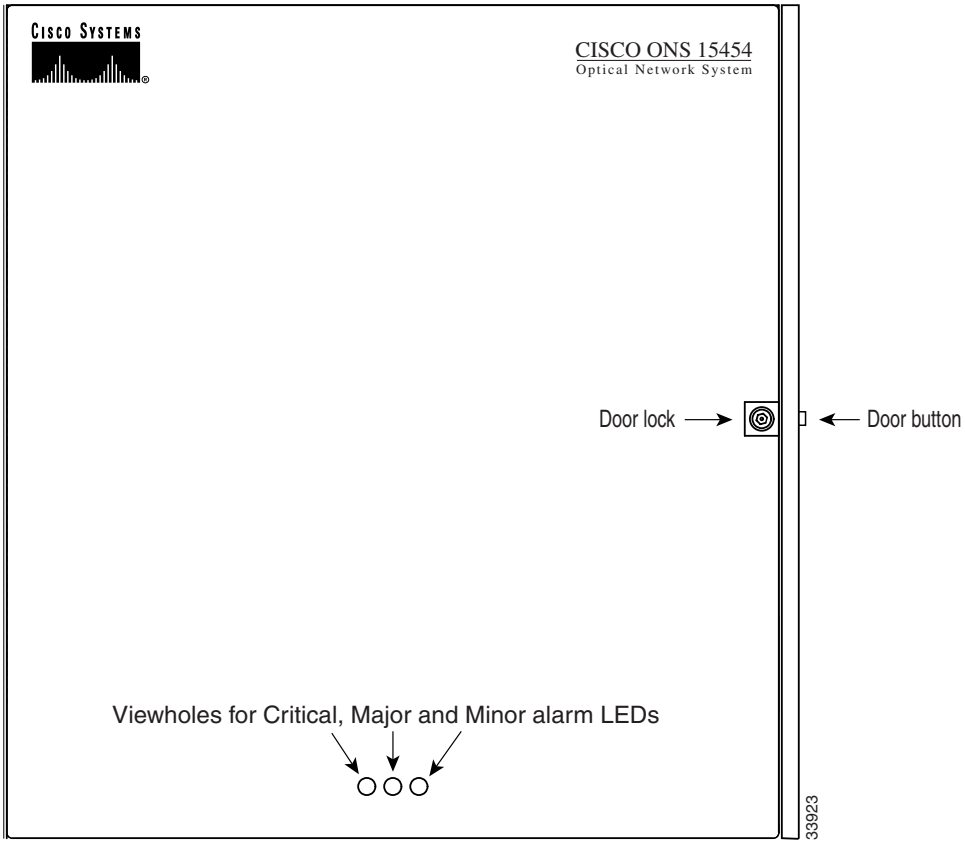

The ONS 15454 ANSI ships with a standard door but can also accommodate a deep door and extended fiber clips (15454-DOOR-KIT) to provide additional room for cabling (Figure 13-17). The ONS 15454 ETSI does not support the deep door.

Figure 13-17 Cisco ONS 15454 ANSI Deep Door

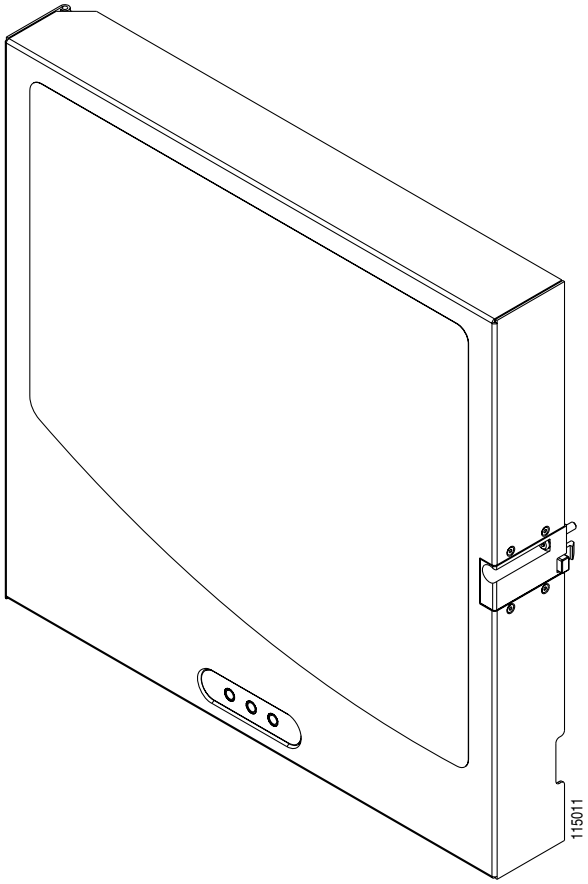

The ONS 15454 door locks with a pinned hex key that ships with the shelf assembly. A button on the right side of the shelf assembly releases the door. You can remove the front door to provide unrestricted access to the front of the shelf assembly.

Before you remove the ONS 15454 front door, you must remove the ground strap of the front door (Figure 13-18).

Figure 13-18 ONS 15454 ANSI Front Door Ground Strap

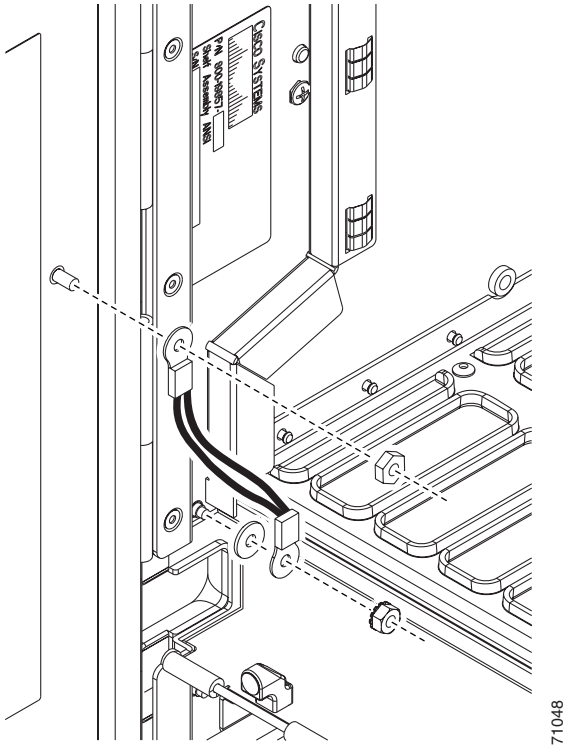

Figure 13-19 shows how to remove the ONS 15454 ANSI front door.

Figure 13-19 Removing the ONS 15454 ANSI Front Door

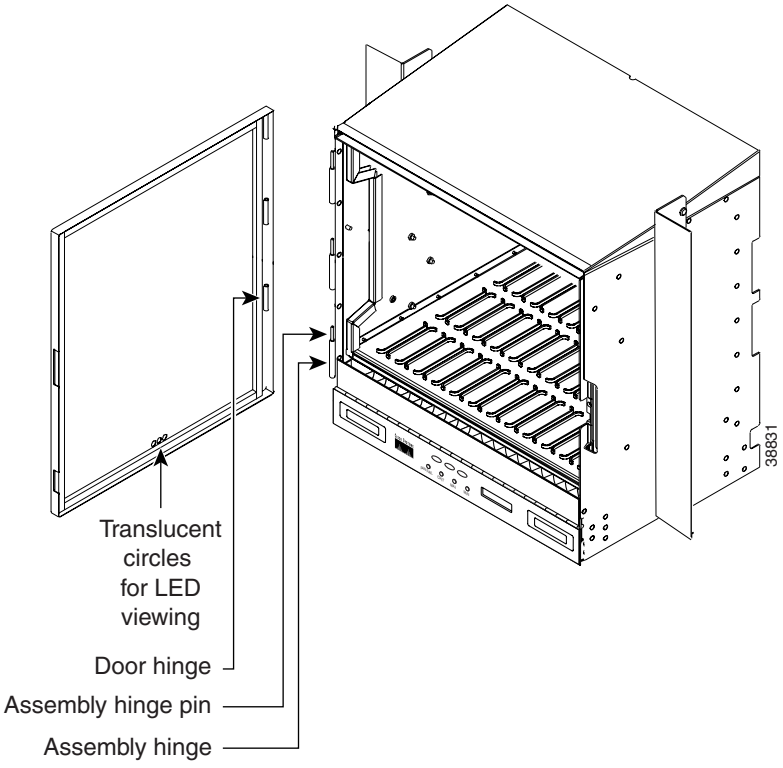

Figure 13-20 shows how to remove the ONS 15454 ETSI front door.

Figure 13-20 Removing the ONS 15454 ETSI Front Door

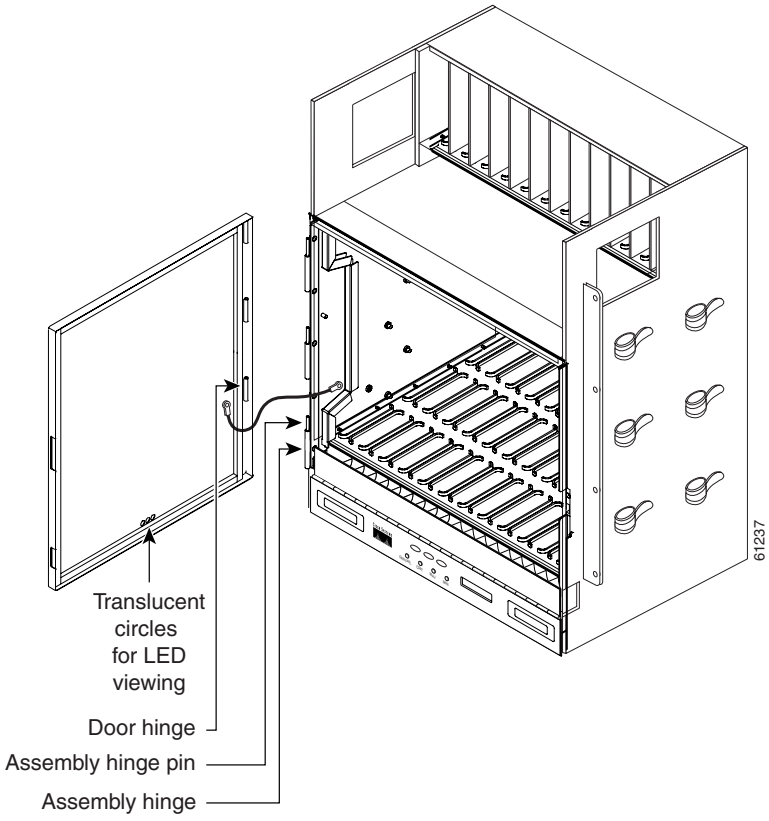

An erasable label is pasted on the inside of the front door. You can use the label to record slot assignments, port assignments, card types, node ID, rack ID, and serial number for the ONS 15454. Figure 13-21 shows the erasable label on the ONS 15454 ANSI shelf.

Figure 13-21 ONS 15454 ANSI Front-Door Erasable Label

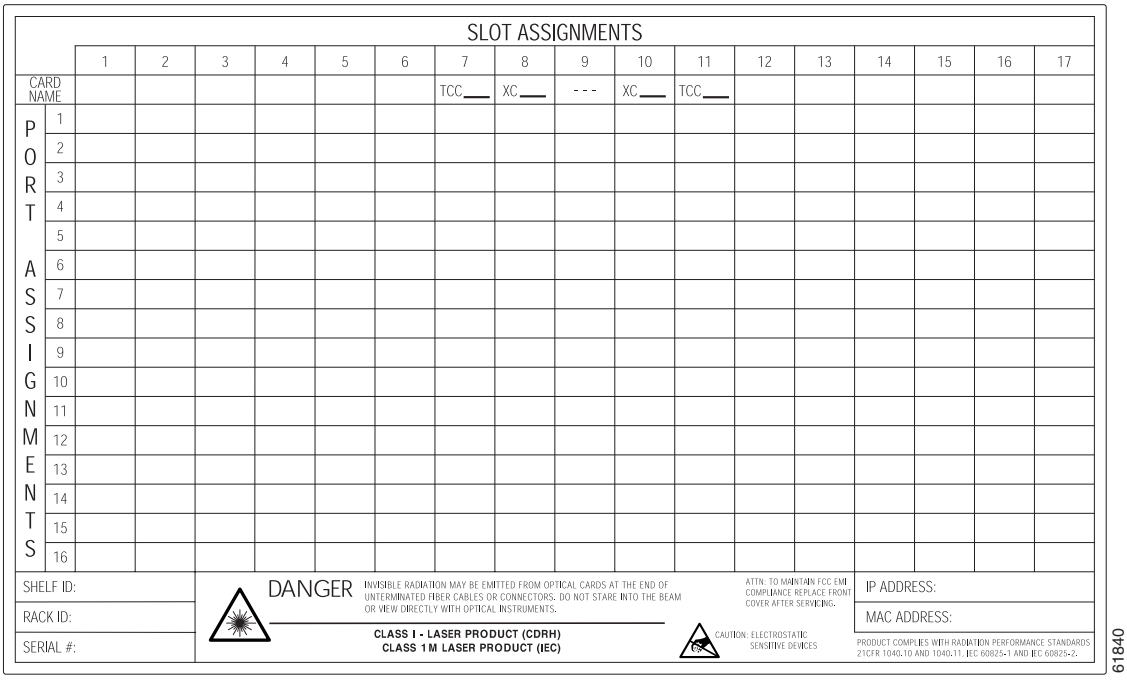

Figure 13-22 shows the erasable label on the ONS 15454 ETSI shelf.

Figure 13-22 ONS 15454 ETSI Front-Door Erasable Label

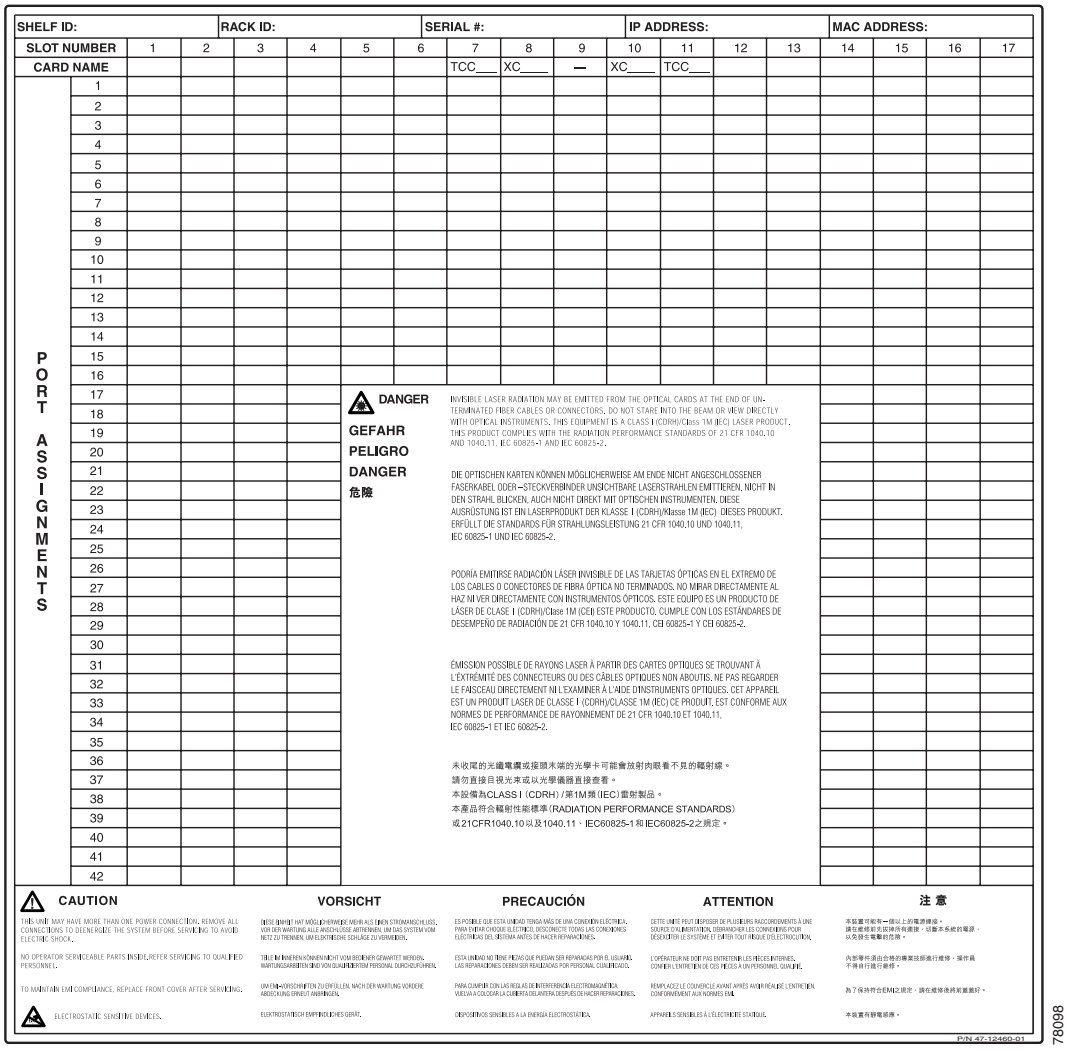

The front door label also includes the Class I and Class 1M laser warning. See Figure 13-23 for the ONS 15454 ANSI laser warning and Figure 13-24 for the ONS 15454 ETSI laser warning.

Figure 13-23 Laser Warning on the ONS 15454 ANSI Front-Door Label

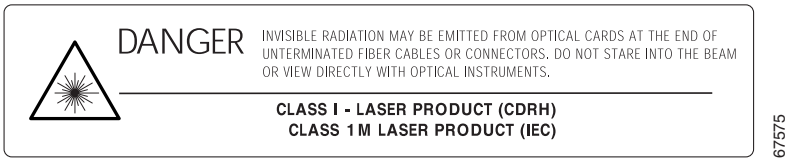

Figure 13-24 Laser Warning on the ONS 15454 ETSI Front-Door Label

DANGER

INVISIBLE LASER RADIATION MAY BE EMITTED FROM THE OPTICAL CARDS AT THE END OF UN-TERMINATED FIBER CABLES OR CONNECTORS. DO NOT STARE INTO THE BEAM OR VIEW DIRECTLY WITH OPTICAL INSTRUMENTS. THIS EQUIPMENT IS A CLASS I (CDRH)/Class 1M (IEC) LASER PRODUCT. THIS PRODUCT COMPLIES WITH THE RADIATION PERFORMANCE STANDARDS OF 21 CFR 1040.10 AND 1040.11, IEC 60825-1 AND IEC 60825-2.

GEFAHR

DIE OPTISCHEN KARTEN KÖNNEN MÖGLICHERWEISE AM ENDE NICHT ANGESCHLOSSENER FASERKABEL ODER –STECKVERBINDER UNSICHTBARE LASERSTRAHLEN EMITTIEREN. NICHT IN DEN STRAHL BLICKEN, AUCH NICHT DIREKT MIT OPTISCHEN INSTRUMENTEN. DIESE AUSRÜSTUNG IST EIN LASERPRODUKT DER KLASSE I (CDRH)/Klasse 1M (IEC) DIESES PRODUKT. ERFÜLLT DIE STANDARDS FÜR STRAHLUNGSLEISTUNG 21 CFR 1040.10 UND 1040.11, IEC 60825-1 UND IEC 60825-2.

PELIGRO

PODRÍA EMITIRSE RADIACIÓN LÁSER INVISIBLE DE LAS TARJETAS ÓPTICAS EN EL EXTREMO DE LOS CABLES O CONECTORES DE FIBRA ÓPTICA NO TERMINADOS. NO MIRAR DIRECTAMENTE AL HAZ NI VER DIRECTAMENTE CON INSTRUMENTOS ÓPTICOS. ESTE EQUIPO ES UN PRODUCTO DE LÁSER DE CLASE I (CDRH)/Clase 1M (CEI) ESTE PRODUCTO. CUMPLE CON LOS ESTÁNDARES DE DESEMPEÑO DE RADIACIÓN DE 21 CFR 1040.10 Y 1040.11, CEI 60825-1 Y CEI 60825-2.

DANGER

ÉMISSION POSSIBLE DE RAYONS LASER À PARTIR DES CARTES OPTIQUES SE TROUVANT À L'ÉXTRÉMITÉ DES CONNECTEURS OU DES CÂBLES OPTIQUES NON ABOUTIS. NE PAS REGARDER LE FAISCEAU DIRECTEMENT NI L'EXAMINER À L'AIDE D'INSTRUMENTS OPTIQUES. CET APPAREIL EST UN PRODUIT LASER DE CLASSE I (CDRH)/CLASSE 1M (IEC) CE PRODUIT. EST CONFORME AUX NORMES DE PERFORMANCE DE RAYONNEMENT DE 21 CFR 1040.10 ET 1040.11, IEC 60825-1 ET IEC 60825-2.

危險

未收尾的光纖電纜或接頭末端的光學卡可能會放射肉眼看不見的輻射線。
請勿直接目視光束或以光學儀器直接查看。
本設備為CLASS I（CDRH）/第1M類（IEC）雷射製品。
本產品符合輻射性能標準（RADIATION PERFORMANCE STANDARDS）
或21CFR1040.10以及1040.11、IEC60825-1和IEC60825-2之規定。

78099

13.7 ONS 15454 ANSI Backplane Covers

If a backplane does not have an electrical interface assembly (EIA) panel installed, it should have two sheet metal backplane covers (one on each side of the backplane). See Figure 13-25. Each cover is held in place with nine 6-32 x 3/8 inch Phillips screws.

Figure 13-25 Backplane Covers

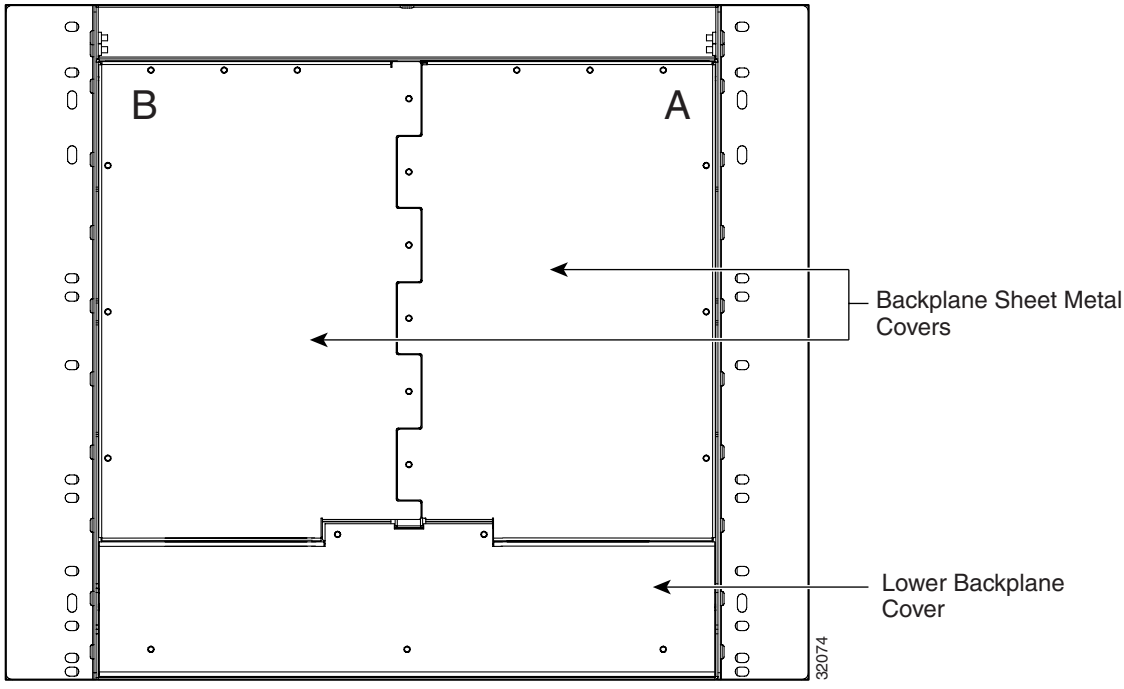

13.7.1 Lower Backplane Cover

The lower section of the ONS 15454 ANSI backplane is covered by either a clear plastic protector (15454-SA-ANSI) or a sheet metal cover (15454-SA-HD), which is held in place by five 6-32 x 1/2 inch screws. Remove the lower backplane cover to access the alarm interface panel (AIP), alarm pin fields, frame ground, and power terminals (Figure 13-26).

Figure 13-26 Removing the Lower Backplane Cover

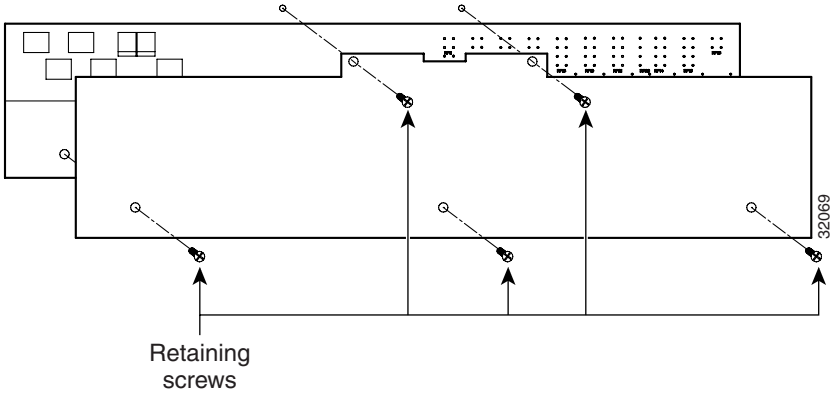

13.7.2 Rear Cover

The ONS 15454 ANSI has an optional clear plastic rear cover. This clear plastic cover provides additional protection for the cables and connectors on the backplane. Figure 13-27 shows the rear cover screw locations.

Figure 13-27 Backplane Attachment for Cover

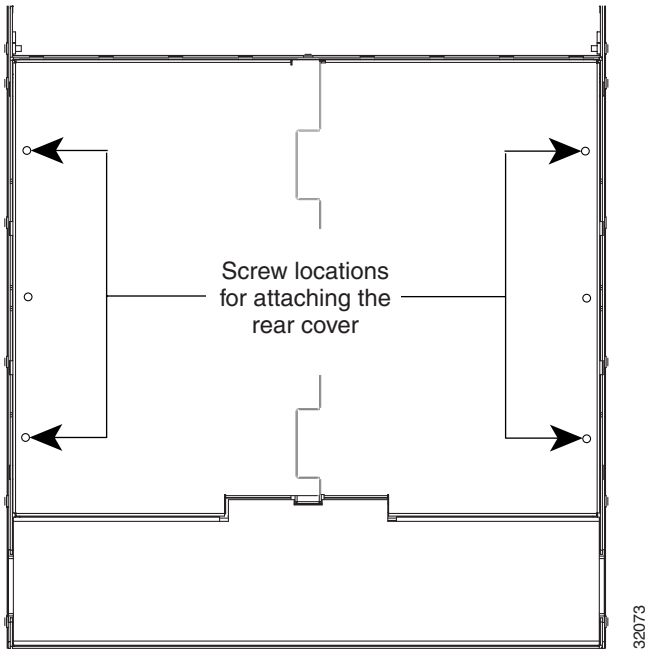

You can also install the optional spacers if more space is needed between the cables and rear cover (Figure 13-28).

Figure 13-28 Installing the Plastic Rear Cover with Spacers

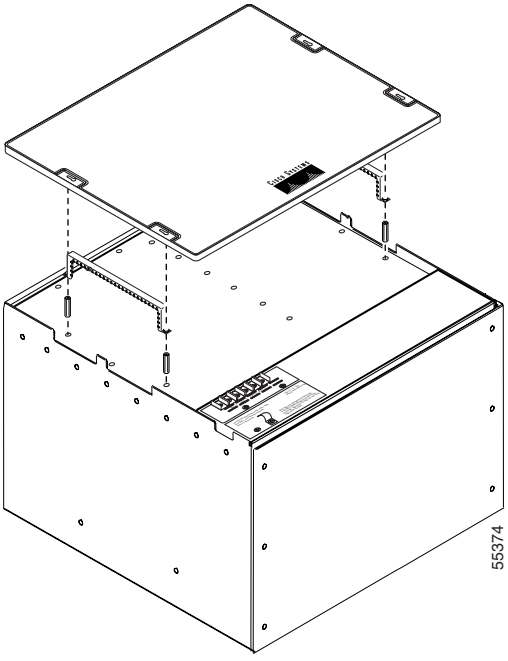

13.7.3 Alarm Interface Panel

The AIP is located above the alarm contacts on the lower section of the backplane. The AIP provides surge protection for the ONS 15454 ANSI. It also provides an interface from the backplane to the fan-tray assembly and LCD. The AIP plugs into the backplane using a 96-pin DIN connector and is held in place with two retaining screws. The panel has a nonvolatile memory chip that stores the unique node address (MAC address).

Note The 5-A AIP (73-7665-XX) is required when installing the new fan-tray assembly (15454-FTA3), which comes preinstalled on the shelf assembly (15454-SA-ANSI or 15454-SA-HD).

Note The MAC address identifies the nodes that support circuits. It allows Cisco Transport Controller (CTC) to determine circuit sources, destinations, and spans. The TCC2 cards in the ONS 15454 ANSI also use the MAC address to store the node database.

Note A blown fuse on the AIP board can cause the LCD display to go blank.

13.7.4 Alarm Interface Panel Replacement

If the AIP fails, a MAC Fail alarm displays on the CTC Alarms menu and/or the LCD display on the fan-tray assembly goes blank. To perform an in-service replacement of the AIP, you must contact the Cisco Technical Assistance Center (Cisco TAC). For contact information, see Obtaining Technical Assistance, page lx.

You can replace the AIP on an in-service system without affecting traffic (except Ethernet traffic on nodes running a software release earlier than Release 4.0). The circuit repair feature allows you to repair circuits affected by MAC address changes on one node at a time. Circuit repair works when all nodes are running the same software version. Each individual AIP upgrade requires an individual circuit repair; if AIPs are replaced on two nodes, the circuit repair must be performed twice. Always replace an AIP during a maintenance window.

Caution Do not use a 2-A AIP with a 5-A fan-tray assembly; doing so causes a blown fuse on the AIP.

Note Ensure that all nodes in the affected network are running the same software version before replacing the AIP and repairing circuits. If you need to upgrade nodes to the same software version, no hardware should be changed or circuit repair performed until after the software upgrade is complete.

13.8 ONS 15454 ETSI Front Mount Electrical Connection

The ONS 15454 ETSI positive and negative power terminals are located on FMEC cards in the Electrical Facility Connection Assembly (EFCA). The ground connection is the grounding receptacle on the side panel of the shelf.

The ONS 15454 ETSI EFCA at the top of the shelf has 12 FMEC slots numbered sequentially from left to right (18 to 29). Slots 18 to 22 and 25 to 29 provide electrical connections. Slots 23 and 24 host the MIC-A/P and MIC-C/T/P cards, respectively. The MIC-A/P and the MIC-C/T/P cards are also used to connect alarm, timing, LAN, and craft connections to the ONS 15454 ETSI.

For more information about the MIC-A/P and MIC-C/T/P, which are required for power supply as well as alarm, timing, and LAN connections, see Chapter 14, “Card Reference.”

13.9 ONS 15454 ANSI Alarm Expansion Panel

The optional ONS 15454 ANSI alarm expansion panel (AEP) can be used with the Alarm Interface Controller–International card (AIC-I) card to provide an additional 48 dry alarm contacts for the ONS 15454 ANSI: 32 inputs and 16 outputs. The AEP is a printed circuit board assembly that is installed on the backplane. Figure 13-29 shows the AEP board; the left connector is the input connector and the right connector is the output connector.

The AIC-I without an AEP already contains direct alarm contacts. These direct AIC-I alarm contacts are routed through the backplane to wire-wrap pins accessible from the back of the shelf. If you install an AEP, you cannot use the alarm contacts on the wire-wrap pins. For further information about the AIC-I, see Chapter 14, “Card Reference.”

Figure 13-29 AEP Printed Circuit Board Assembly

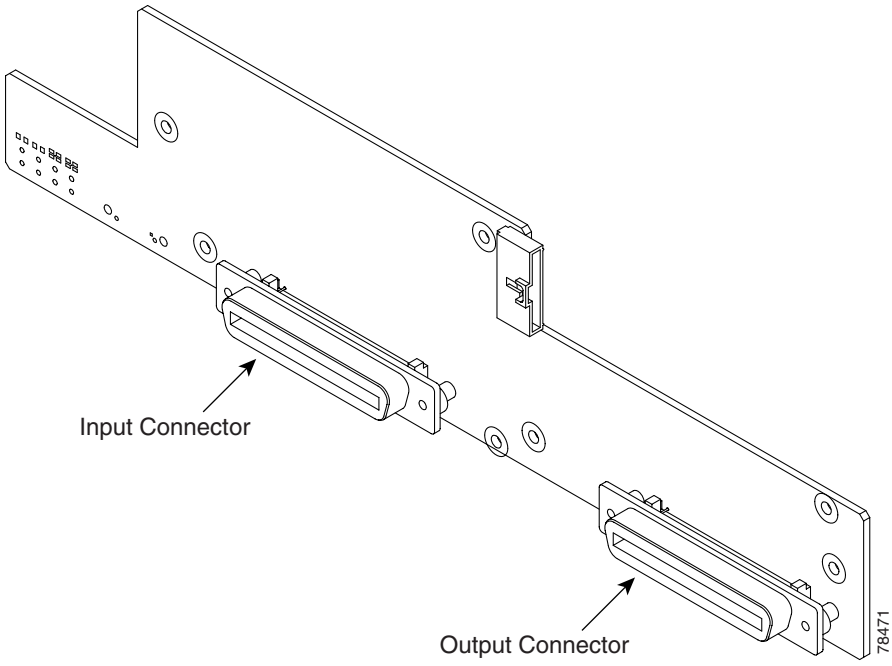

Figure 13-30 shows the AEP block diagram.

Figure 13-30 AEP Block Diagram

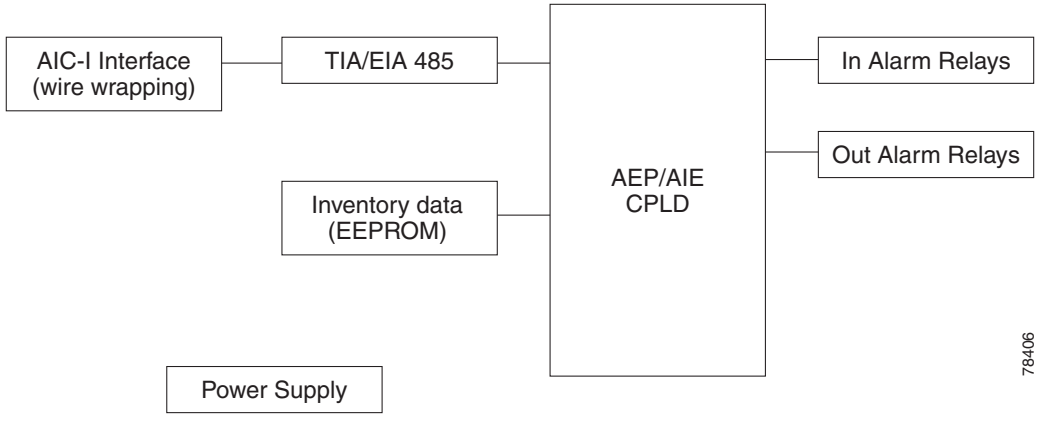

Each AEP alarm input port has provisionable label and severity. The alarm inputs have optocoupler isolation. They have one common 32-VDC output and a maximum of 2 mA per input. Each opto metal oxide semiconductor (MOS) alarm output can operate by definable alarm condition, a maximum open circuit voltage of 60 VDC, anda maximum current of 100 mA. See the "20.7 External Alarms and Controls" section on page 20-13 for further information.

13.9.1 Wire-Wrap and Pin Connections

Figure 13-31 shows the wire-wrapping connections on the backplane.

Figure 13-31 AEP Wire-Wrap Connections to Backplane Pins

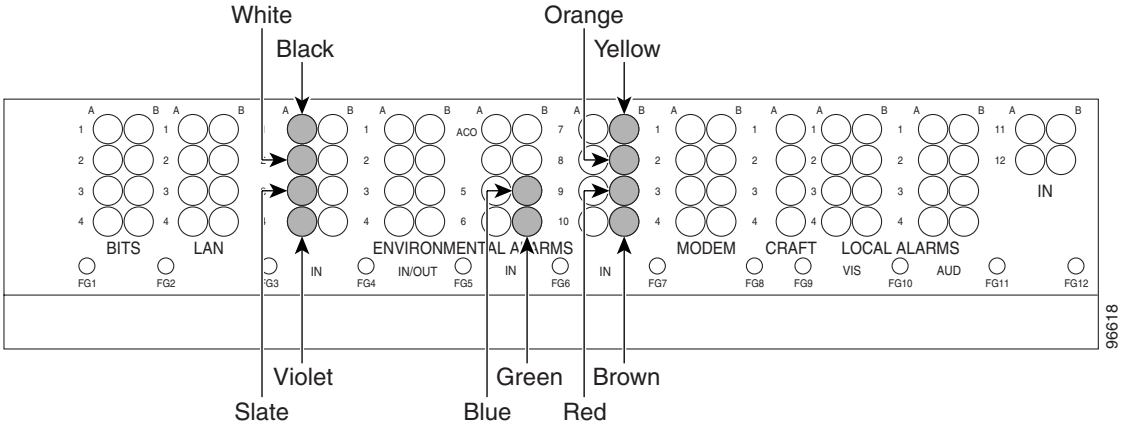

Table 13-2 shows the backplane pin assignments and corresponding signals on the AIC-I and AEP.

Table 13-2 Pin Assignments for the AEP

AEP Cable Wire	Backplane Pin	AIC-I Signal	AEP Signal
Black	A1	GND	AEP_GND
White	A2	AE_+5	AEP_+5
Slate	A3	VBAT–	VBAT–
Violet	A4	VB+	VB+
Blue	A5	AE_CLK_P	AE_CLK_P
Green	A6	AE_CLK_N	AE_CLK_N
Yellow	A7	AE_DIN_P	AE_DOUT_P
Orange	A8	AE_DIN_N	AE_DOUT_N
Red	A9	AE_DOUT_P	AE_DIN_P
Brown	A10	AE_DOUT_N	AE_DIN_N

Figure 13-32 is a circuit diagram of the alarm inputs. (Inputs 1 and 32 are shown in the example.)

Figure 13-32 Alarm Input Circuit Diagram

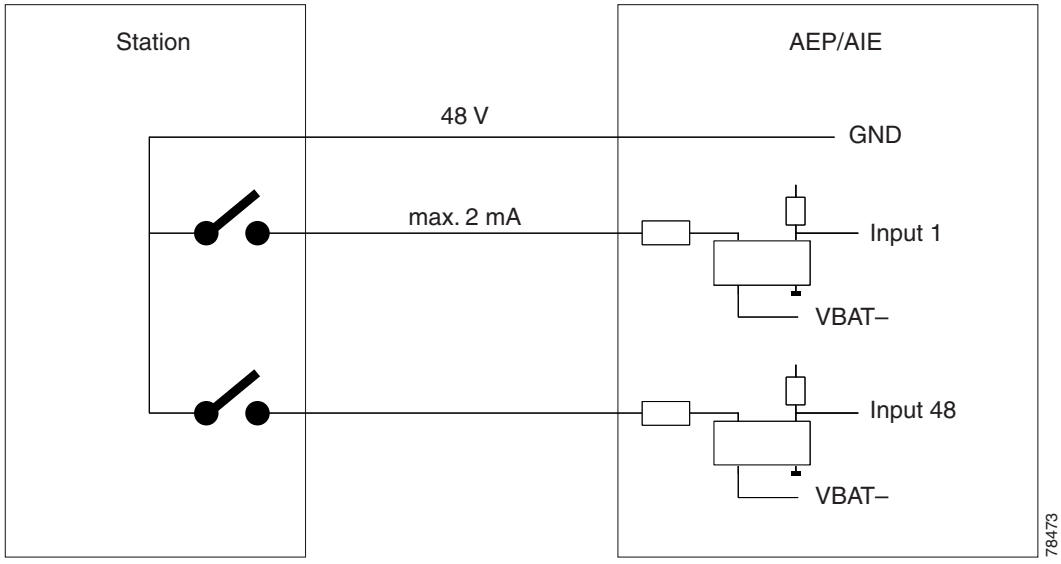

Table 13-3 lists the connections to the external alarm sources.

Table 13-3 Alarm Input Pin Association

AMP Champ Pin Number	Signal Name	AMP Champ Pin Number	Signal Name
1	ALARM_IN_1–	27	GND
2	GND	28	ALARM_IN_2–
3	ALARM_IN_3–	29	ALARM_IN_4–
4	ALARM_IN_5–	30	GND
5	GND	31	ALARM_IN_6–
6	ALARM_IN_7–	32	ALARM_IN_8–
7	ALARM_IN_9–	33	GND
8	GND	34	ALARM_IN_10–
9	ALARM_IN_11–	35	ALARM_IN_12–
10	ALARM_IN_13–	36	GND
11	GND	37	ALARM_IN_14–
12	ALARM_IN_15–	38	ALARM_IN_16–
13	ALARM_IN_17–	39	GND
14	GND	40	ALARM_IN_18–
15	ALARM_IN_19–	41	ALARM_IN_20–
16	ALARM_IN_21–	42	GND
17	GND	43	ALARM_IN_22–
18	ALARM_IN_23–	44	ALARM_IN_24–
19	ALARM_IN_25–	45	GND

Table 13-3 Alarm Input Pin Association (continued)

AMP Champ Pin Number	Signal Name	AMP Champ Pin Number	Signal Name
20	GND	46	ALARM_IN_26–
21	ALARM_IN_27–	47	ALARM_IN_28–
22	ALARM_IN_29–	48	GND
23	GND	49	ALARM_IN_30–
24	ALARM_IN_31–	50	—
25	ALARM_IN_+	51	GND1
26	ALARM_IN_0–	52	GND2

Figure 13-33 is a circuit diagram of the alarm outputs. (Outputs 1 and 16 are shown in the example.)

Figure 13-33 Alarm Output Circuit Diagram

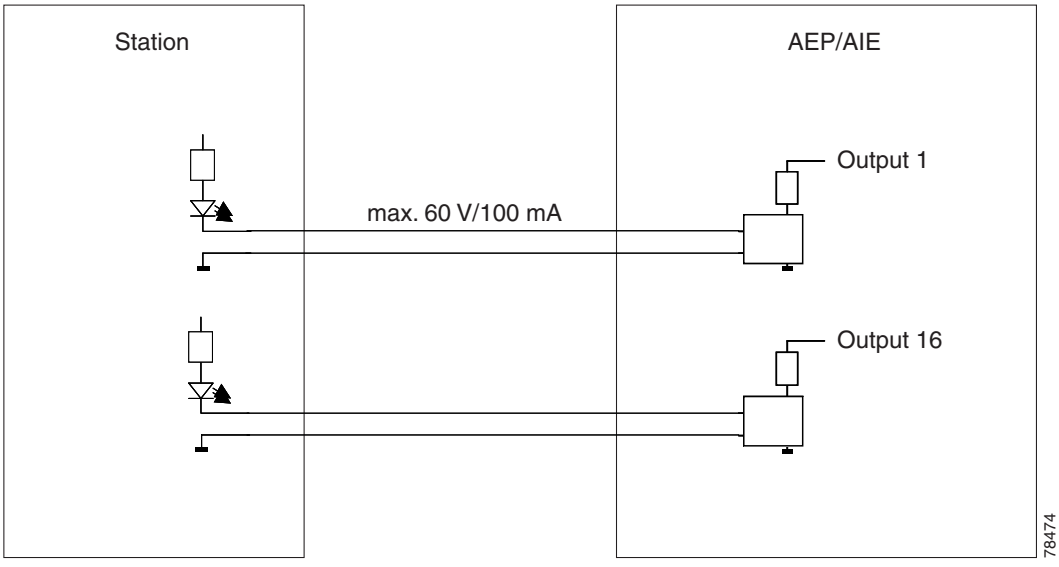

Use the pin numbers in Table 13-4 to connect to the external elements being switched by external controls.

Table 13-4 Pin Association for Alarm Output Pins

AMP Champ Pin Number	Signal Name	AMP Champ Pin Number	Signal Name
1	—	27	COM_0
2	COM_1	28	—
3	NO_1	29	NO_2
4	—	30	COM_2
5	COM_3	31	—
6	NO_3	32	NO_4

Table 13-4 Pin Association for Alarm Output Pins (continued)

AMP Champ Pin Number	Signal Name	AMP Champ Pin Number	Signal Name
7	—	33	COM_4
8	COM_5	34	—
9	NO_5	35	NO_6
10	—	36	COM_6
11	COM_7	37	—
12	NO_7	38	NO_8
13	—	39	COM_8
14	COM_9	40	—
15	NO_9	41	NO_10
16	—	42	COM_10
17	COM_11	43	—
18	NO_11	44	NO_12
19	—	45	COM_12
20	COM_13	46	—
21	NO_13	47	NO_14
22	—	48	COM_14
23	COM_15	49	—
24	NO_15	50	—
25	—	51	GND1
26	NO_0	52	GND2

13.9.2 AEP Specifications

The AEP has the following specifications:

- Alarm inputs
  - Number of inputs: 32
  - Optocoupler isolated
  - Label customer provisionable
  - Severity customer provisionable
  - Common 32 V output for all alarm inputs
  - Each input limited to 2 mA
  - Termination: 50-pin AMP champ connector
- Alarm outputs
  - Number of outputs: 16
  - Switched by opto MOS (metal oxide semiconductor)

  - Triggered by definable alarm condition
  - Maximum allowed open circuit voltage: 60 VDC
  - Maximum allowed closed circuit current: 100 mA
  - Termination: 50-pin AMP champ connector
- Environmental
  - Overvoltage protection: as in ITU-T G.703 Annex B
  - Operating temperature: –40 to +65 degrees Celsius (–40 to +149 degrees Fahrenheit)
  - Operating humidity: 5 to 95%, noncondensing
  - Power consumption: 3.00 W max., from +5 VDC from AIC-I, 10.2 BTU/hr max.
- Dimensions of AEP board
  - Height: 20 mm (0.79 in.)
  - Width: 330 mm (13.0 in.)
  - Depth: 89 mm (3.5 in.)
  - Weight: 0.18 kg (0.4 lb)
- Compliance: Installed ONS 15454 cards comply with these safety standards:

  IEC 60950, EN 60950, UL 60950, CSA C22.2 No. 60950, TS 001, AS/NZS 3260

13.10 Cable Routing and Management

The ONS 15454 cable management facilities include the following:

- Fiber patch panels
- A cable-routing channel (behind the fold-down door) that runs the width of the shelf assembly (Figure 13-34 on page 13-37)
- Plastic horseshoe-shaped fiber guides at each side opening of the cable-routing channel that ensure that the proper bend radius is maintained in the fibers (Figure 13-35 on page 13-38)

  Note You can remove the fiber guide, if necessary, to create a larger opening (if you need to route CAT-5 Ethernet cables out the side, for example). To remove the fiber guide, take out the three screws that anchor it to the side of the shelf assembly.

- A fold-down door that provides access to the cable-management tray
- Cable tie-wrap facilities on EIAs that secure cables to the cover panel (ANSI only)
- Reversible jumper routing fins that enable you to route cables out either side by positioning the fins as desired
- Jumper slack storage reels (2) on each side panel that reduce the amount of slack in cables that are connected to other devices

  Note To remove the jumper slack storage reels, take out the screw in the center of each reel.

- Optional fiber management tray (recommended for DWDM nodes)

- Optional tie-down bar (ANSI only)

Figure 13-34 shows the cable management facilities that you can access through the fold-down front door, including the cable-routing channel and the jumper routing fins.

Figure 13-34 Managing Cables on the Front Panel

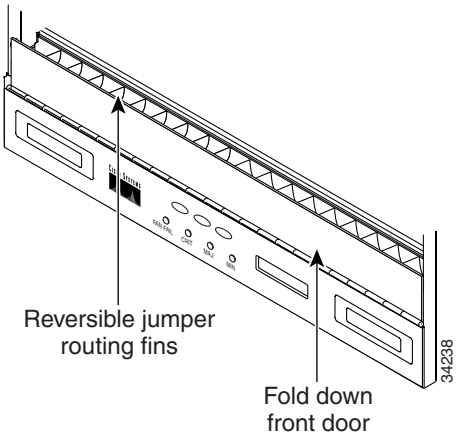

13.10.1 Fiber Management

The jumper routing fins are designed to route fiber jumpers out of both sides of the shelf. Slots 1 to 6 exit to the left, and Slots 12 to 17 exit to the right. Figure 13-35 shows fibers routed from cards in the left slots, down through the fins, then exiting out the fiber channel to the left. The maximum capacity of the fiber routing channel depends on the size of the fiber jumpers.

Figure 13-35 Fiber Capacity

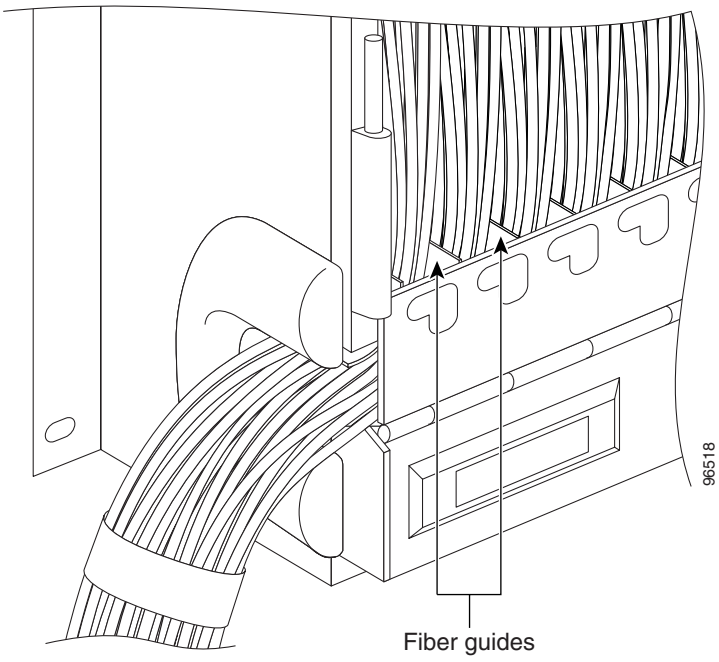

Table 13-5 provides the maximum capacity of the fiber channel for one side of an ANSI shelf, depending on fiber size and number of Ethernet cables running through that fiber channel.

Table 13-5 ANSI Fiber Channel Capacity (One Side of the Shelf)

Fiber Diameter	Maximum Number of Fibers Exiting Each Side		
	No Ethernet Cables	One Ethernet Cable	Two Ethernet Cables
1.6 mm (0.6 inch)	144	127	110
2 mm (0.7 inch)	90	80	70
3 mm (0.11 inch)	40	36	32

Table 13-6 provides the maximum capacity of the fiber channel for one side of an ETSI shelf, depending on fiber size and number of Ethernet cables running through that fiber channel.

Table 13-6 ETSI Fiber Channel Capacity (One Side of the Shelf)

Fiber Diameter	Maximum Number of Fibers Exiting Each Side		
	No Ethernet Cables	One Ethernet Cable	Two Ethernet Cables
1.6 mm (0.6 inch)	126	110	94
2 mm (0.7 inch)	80	70	60
3 mm (0.11 inch)	36	31	26

Plan your fiber size according to the number of cards/ports installed in each side of the shelf. For example, if your port combination requires 36 fibers, 3-mm (0.11-inch) fiber is adequate. If your port combination requires 68 fibers, you must use 2-mm (0.7-inch) or smaller fibers.

13.10.2 Fiber Management Using the Optional Patch-Panel Module

The patch-panel module manages the connections between multiplexer/demultiplexer and transponder modules by splitting patch cords into single connections. The patch-panel shelf assembly consists of a shelf, pull-out drawer, and drop-in patch-panel module. It can host up to eight ribbon cables (with eight fibers each) entering the drawer or 64 cables (with a maximum outer diameter of 2 mm [0.079 inches]).

Because the patch-panel module can host 64 connections, a hub node will typically require two patch-panel modules, and other DWDM nodes typically require one. The module fits 19- and 23-inch (482.6-mm and 584.2-mm) ANSI racks and 600 mm (23.6 inch) x 300 mm (11.8 inch) ETSI racks, using reversible brackets.

Figure 13-36 shows a fully fibered patch-panel module.

Figure 13-36 Patch-Panel Module

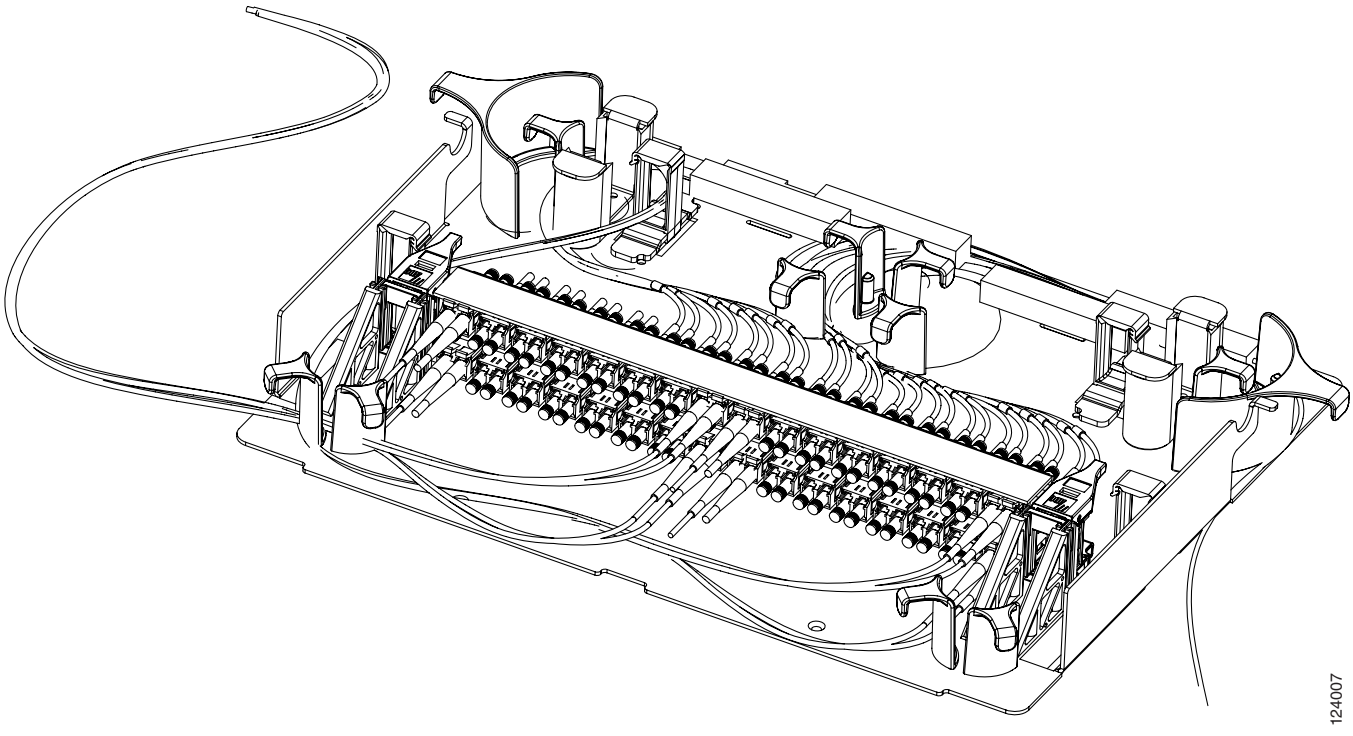

13.10.3 Fiber Management Using the Optional DWDM Fiber Tray

Cisco recommends installing a fiber storage tray in multinode racks to facilitate fiber management for DWDM applications. Refer to Figure 13-15 for typical mounting locations.

Table 13-7 provides the fiber capacity for each tray.

Table 13-7 Fiber Tray Capacity

Fiber Diameter	Maximum Number of Fibers Exiting Each Side
1.6 mm (0.6 inch)	62
2 mm (0.7 inch)	48
3 mm (0.11 inch)	32

Figure 13-37 shows a DWDM fiber tray.

Figure 13-37 DWDM Fiber Tray

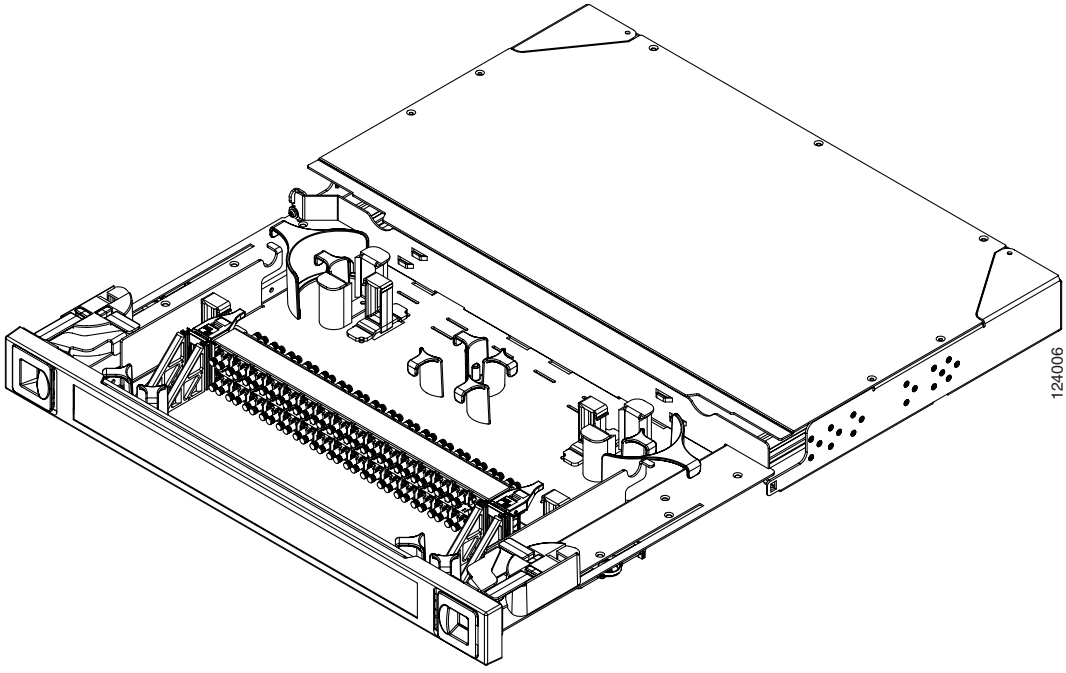

13.10.4 Fiber Management Using the Optional ANSI Tie-Down Bar

You can install a 5-inch (127-mm) tie-down bar on the rear of the ANSI chassis. You can use tie-wraps or other site-specific material to bundle the cabling and attach it to the bar so that you can more easily route the cable away from the rack.

Figure 13-38 shows the tie-down bar, the ONS 15454 ANSI, and the rack.

Figure 13-38 Tie-Down Bar on the Cisco ONS 15454 ANSI Shelf Assembly

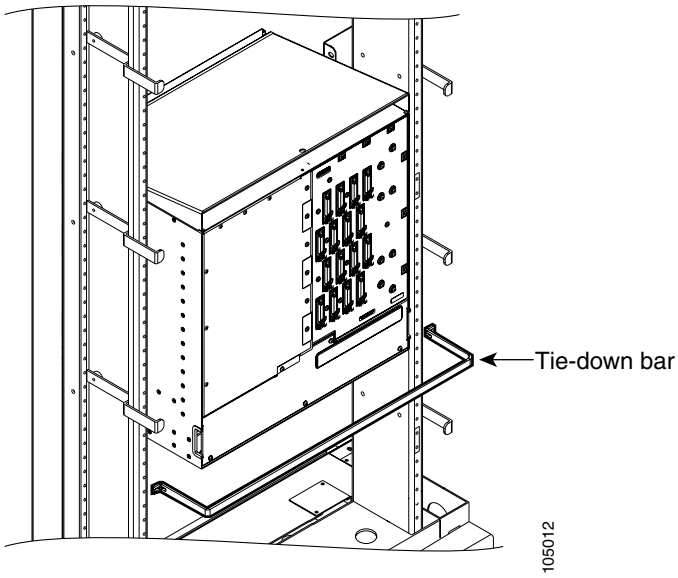

13.11 Fan-Tray Assembly

The fan-tray assembly is located at the bottom of the ONS 15454 shelf assembly. The fan tray is a removable drawer that holds fans and fan-control circuitry for the ONS 15454. The front door can be left in place or removed before installing the fan-tray assembly. After you install the fan tray, you should only need to access it if a fan failure occurs or if you need to replace or clean the fan-tray air filter. Refer to Chapter 11, "Maintain the Node" to clean and replace the fan-tray assembly.

The front of the fan-tray assembly has an LCD screen that provides slot- and port-level information for all card slots, including the number of Critical, Major, and Minor alarms.

The fan-tray assembly features an air filter at the bottom of the tray that you can install and remove by hand. Remove and visually inspect this filter every 30 days and keep spare filters in stock. Refer to Chapter 11, "Maintain the Node," for information about cleaning and maintaining the fan-tray air filter.

Caution Do not operate an ONS 15454 without the mandatory fan-tray air filter.

Caution The 15454-FTA3-T fan-tray assembly can only be installed in ONS 15454 Release 3.1 and later shelf assemblies (15454-SA-ANSI, P/N: 800-19857; 15454-SA-HD, P/N: 800-24848). It includes a pin that does not allow it to be installed in ONS 15454 shelf assemblies released before ONS 15454 Release 3.1 (15454-SA-NEBS3E, 15454-SA-NEBS3, and 15454-SA-R1). Equipment damage can result from attempting to install the 15454-FTA3 in a noncompatible shelf assembly.

Note The 15454-FTA3 is not I-temp compliant. To obtain an I-temp fan tray, install the 15454-FTA3-T fan-tray assembly in an ONS 15454 Release 3.1 shelf assembly (15454-SA-ANSI or 15454-SA-HD). However, do not install the ONS 15454 SONET XC10G cross-connect cards with the 15454-FTA2 fan-tray assembly.

See Figure 13-39 for the position of the ONS 15454 ETSI fan-tray assembly.

Figure 13-39 Position of the ONS 15454 ETSI Fan-Tray Assembly

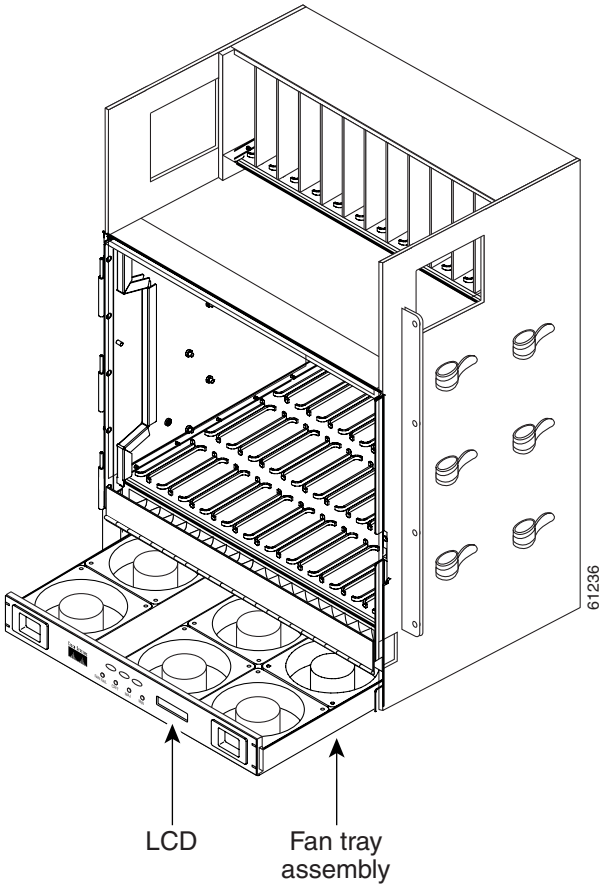

13.11.1 Fan Speed and Power Requirements

Fan speed is controlled by the TCC2 card's temperature sensors. The sensors measure the input air temperature at the fan-tray assembly. Fan speed options are low, medium, and high. If the TCC2 card fails, the fans automatically shift to high speed. The temperature measured by the TCC2 sensors appears on the LCD screen.

Table 13-8 lists power requirements for the fan-tray assembly.

Table 13-8 Fan Tray Assembly Power Requirements

Fan Tray Assembly	Watts	Amps	BTU/Hr
FTA2	53	1.21	198
FTA3 -T	86.4	1.8	295

13.11.2 Fan Failure

If one or more fans fail on the fan-tray assembly, replace the entire assembly. You cannot replace individual fans. The red Fan Fail LED on the front of the fan tray illuminates when one or more fans fail. For fan tray replacement instructions, refer to the *Cisco ONS 15454 SONET and DWDM Troubleshooting Guide*. The red Fan Fail LED clears after you install a working fan tray.

13.11.3 Air Filter

The ONS 15454 contains a reusable air filter (for ANSI: 15454-FTF2; for ETSI: 15454E-ETSI-FTF) that is installed either beneath the fan-tray assembly or, for the ONS 15454 ANSI, in the optional external filter brackets.

The reusable filter is made of a gray, open-cell, polyurethane foam that is specially coated to provide fire and fungi resistance. All versions of the ONS 15454 can use the reusable air filter. Spare filters should be kept in stock. Inspect the air filter every 30 days, and clean the filter every three to six months. Replace the air filter every two to three years. Avoid cleaning the air filter with harsh cleaning agents or solvents.

Earlier versions of the ONS 15454 ANSI shelf used a disposable air filter that is installed beneath the fan-tray assembly only. However, the reusable air filter is backward compatible.

13.12 Power and Ground Description

Ground the equipment according to Telcordia standards or local practices. The following sections describe power and ground for the ONS 15454 shelves.

13.12.1 ONS 15454 ANSI Power and Ground

Cisco recommends the following wiring conventions, but customer conventions prevail:

- Red wire for battery connections (–48 VDC).
- Black wire for battery return connections (0 VDC).
- The battery return connection is treated as DC-I, as defined in Telcordia GR-1089-CORE, Issue 3.

The ONS 15454 ANSI has redundant –48 VDC #8 power terminals on the shelf-assembly backplane. The terminals are labeled BAT1, RET1, BAT2, and RET2 and are located on the lower section of the backplane behind a clear plastic cover.

To install redundant power feeds, use four power cables and one ground cable. For a single power feed, only two power cables (#10 AWG, 2.588 mm² [0.1018 inch], copper conductor, 194°F [90°C]) and one ground cable (#6 AWG, 4.115 mm² [0.162 inch]) are required. Use a conductor with low impedance to ensure circuit overcurrent protection. However, the conductor must have the capability to safely conduct any faulty current that might be imposed.

Note If you are installing power on a Release 3.0 ONS 15454 ANSI shelf assembly (15454-SA-NEBS3E, 15454-SA-NEBS3, and 15454-SA-R1), the #12 to #14 AWG (2.053 to 1.628 mm²) power cable and #14 AWG (1.628 mm²) ground cable are required.

The existing ground post is a #10-32 bolt. The nut provided for a field connection is also a #10 AWG (2.588 mm² [0.1018 inch]), with an integral lock washer. The lug must be a dual-hole type and rated to accept the #6 AWG (4.115 mm² [0.162 inch]) cable. Two posts are provided on the ONS 15454 ANSI to accommodate the dual-hole lug. Figure 13-40 shows the location of the ground posts.

Figure 13-40 Ground Posts on the ONS 15454 ANSI Backplane

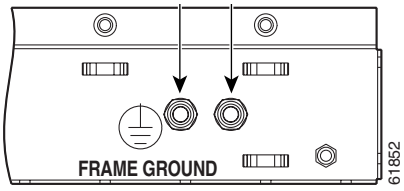

13.12.2 ONS 15454 ETSI Power and Ground

The ONS 15454 ETSI has redundant –48 VDC power connectors on the MIC-A/P and MIC-C/T/P faceplates.

To install redundant power feeds, use the two power cables shipped with the ONS 15454 ETSI and one ground cable.

For details, see the "14.3.1 MIC-A/P FMEC" section on page 14-21 and the "14.3.2 MIC-C/T/P FMEC" section on page 14-24.

Caution Only use the power cables shipped with the ONS 15454 ETSI.

13.13 ONS 15454 ANSI Alarm, Timing, LAN, and Craft Pin Connections

Pin connections are provided on the ONS 15454 ANSI backplane. For information about ONS 15454 ETSI connections, see the "13.8 ONS 15454 ETSI Front Mount Electrical Connection" section on page 13-30.

Caution Always use the supplied ESD wristband when working with a powered ONS 15454. Plug the wristband cable into the ESD jack located on the lower-right outside edge of the shelf assembly.

The ONS 15454 ANSI has a backplane pin field located at the bottom of the backplane. The backplane pin field provides 0.045 $inch^2$ (29 mm^2) wire-wrap pins for enabling external alarms, timing input and output, and craft interface terminals. This section describes the backplane pin field and the pin assignments for the field. Figure 13-41 shows the wire-wrap pins on the backplane pin field. Beneath each wire-wrap pin is a frame ground pin. Frame ground pins are labeled FG1, FG2, FG3, etc. Install the ground shield of the cables connected to the backplane to the ground pin that corresponds to the pin field used.

Note The AIC-I requires a shelf assembly running Software Release 3.4.0 or later. The backplane of the ANSI shelf contains a wire-wrap field with pin assignment according to the layout in Figure 13-41. The shelf assembly might be an existing shelf that has been upgraded to R3.4 or later. In this case the backplane pin labeling appears as indicated in Figure 13-42 on page 13-47, but you must use the pin assignments provided by the AIC-I as shown in Figure 13-41.

Figure 13-41 ONS 15454 ANSI Backplane Pinouts (Release 3.4 or Later)

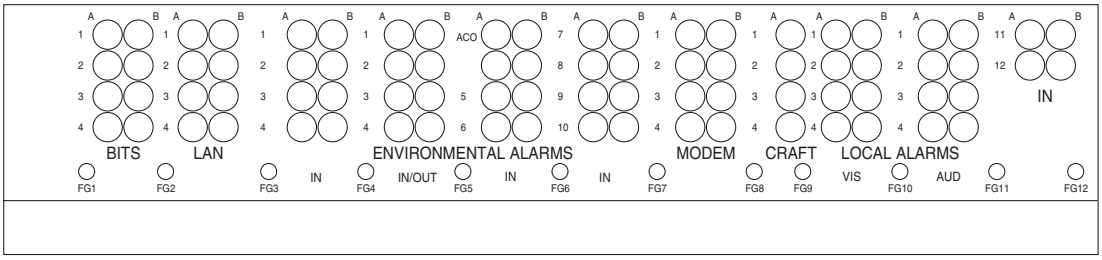

Field	Pin	Function
BITS	A1	BITS Output 2 negative (–)
	B1	BITS Output 2 positive (+)
	A2	BITS Input 2 negative (–)
	B2	BITS Input 2 positive (+)
	A3	BITS Output 1 negative (–)
	B3	BITS Output 1 positive (+)
	A4	BITS Input 1 negative (–)
	B4	BITS Input 1 positive (+)
LAN	Connecting to a hub, or switch	
	A1	RJ-45 pin 6 RX–
	B1	RJ-45 pin 3 RX+
	A2	RJ-45 pin 2 TX–
	B2	RJ-45 pin 1 TX+
	Connecting to a PC/Workstation or router	
	A1	RJ-45 pin 2 RX–
	B1	RJ-45 pin 1 RX+
	A2	RJ-45 pin 6 TX–
	B2	RJ-45 pin 3 TX+
ENVIR ALARMS IN	A1	Alarm input pair number 1: Reports closure on connected wires.
	B1	
	A2	Alarm input pair number 2: Reports closure on connected wires.
	B2	
	A3	Alarm input pair number 3: Reports closure on connected wires.
	B3	
	A4	Alarm input pair number 4: Reports closure on connected wires.
	B4	
	A5	Alarm input pair number 5: Reports closure on connected wires.
	B5	
	A6	Alarm input pair number 6: Reports closure on connected wires.
	B6	
	A7	Alarm input pair number 7: Reports closure on connected wires.
	B7	
	A8	Alarm input pair number 8: Reports closure on connected wires.
	B8	
	A9	Alarm input pair number 9: Reports closure on connected wires.
	B9	
	A10	Alarm input pair number 10: Reports closure on connected wires.
	B10	
	A11	Alarm input pair number 11: Reports closure on connected wires.
	B11	
	A12	Alarm input pair number 12: Reports closure on connected wires.
	B12	

Field	Pin	Function
ENVIR ALARMS IN/OUT N/O	A1/A13	Normally open output pair number 1
	B1/B13	
	A2/A14	Normally open output pair number 2
	B2/B14	
	A3/A15	Normally open output pair number 3
	B3/B15	
	A4/A16	Normally open output pair number 4
	B4/B16	
ACO	A1	Normally open ACO pair
	B1	
CRAFT	A1	Receive (PC pin #2)
	A2	Transmit (PC pin #3)
	A3	Ground (PC pin #5)
	A4	DTR (PC pin #4)
LOCAL ALARMS AUD (Audible) N/O	A1	Alarm output pair number 1: Remote audible alarm.
	B1	
	A2	Alarm output pair number 2: Critical audible alarm.
	B2	
	A3	Alarm output pair number 3: Major audible alarm.
	B3	
	A4	Alarm output pair number 4: Minor audible alarm.
	B4	
LOCAL ALARMS VIS (Visual) N/O	A1	Alarm output pair number 1: Remote visual alarm.
	B1	
	A2	Alarm output pair number 2: Critical visual alarm.
	B2	
	A3	Alarm output pair number 3: Major visual alarm.
	B3	
	A4	Alarm output pair number 4: Minor visual alarm.
	B4	

If you are using an AIC-I card, contacts provisioned as OUT are 1-4. Contacts provisioned as IN are 13-16.

83020

Figure 13-42 ONS 15454 ANSI Backplane Pinouts

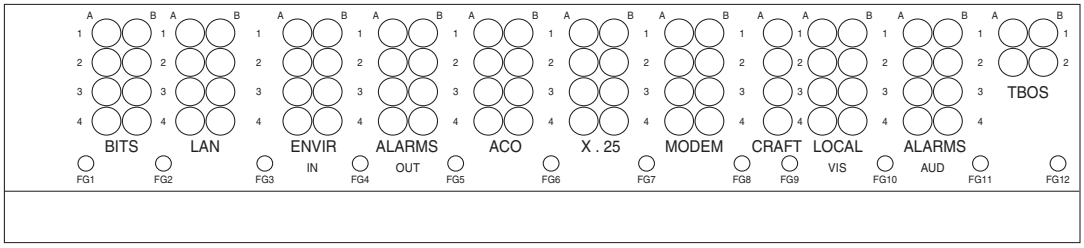

Field	Pin	Function
BITS	A1	BITS Output 2 negative (-)
	B1	BITS Output 2 positive (+)
	A2	BITS Input 2 negative (-)
	B2	BITS Input 2 positive (+)
	A3	BITS Output 1 negative (-)
	B3	BITS Output 1 positive (+)
	A4	BITS Input 1 negative (-)
	B4	BITS Input 1 positive (+)
LAN	Connecting to a hub, or switch	
	A1	RJ-45 pin 6 RX-
	B1	RJ-45 pin 3 RX+
	A2	RJ-45 pin 2 TX-
	B2	RJ-45 pin 1 TX+
	Connecting to a PC/Workstation or router	
	A1	RJ-45 pin 2 RX-
	B1	RJ-45 pin 1 RX+
	A2	RJ-45 pin 6 TX-
	B2	RJ-45 pin 3 TX+
ENVIR ALARMS IN	A1	Alarm input pair number 1: Reports closure on connected wires.
	B1	
	A2	Alarm input pair number 2: Reports closure on connected wires.
	B2	
	A3	Alarm input pair number 3: Reports closure on connected wires.
	B3	
	A4	Alarm input pair number 4: Reports closure on connected wires.
	B4	

Field	Pin	Function
ENVIR ALARMS OUT N/O	A1	Normally open output pair number 1
	B1	
	A2	Normally open output pair number 2
	B2	
	A3	Normally open output pair number 3
	B3	
	A4	Normally open output pair number 4
	B4	
ACO	A1	Normally open ACO pair
	B1	
CRAFT	A1	Receive (PC pin #2)
	A2	Transmit (PC pin #3)
	A3	Ground (PC pin #5)
	A4	DTR (PC pin #4)
LOCAL ALARMS AUD (Audible) N/O	A1	Alarm output pair number 1: Remote audible alarm.
	B1	
	A2	Alarm output pair number 2: Critical audible alarm.
	B2	
	A3	Alarm output pair number 3: Major audible alarm.
	B3	
	A4	Alarm output pair number 4: Minor audible alarm.
	B4	
LOCAL ALARMS VIS (Visual) N/O	A1	Alarm output pair number 1: Remote visual alarm.
	B1	
	A2	Alarm output pair number 2: Critical visual alarm.
	B2	
	A3	Alarm output pair number 3: Major visual alarm.
	B3	
	A4	Alarm output pair number 4: Minor visual alarm.
	B4	

38533

13.13.1 Alarm Contact Connections

The alarm pin field supports up to 17 alarm contacts, including four audible alarms, four visual alarms, one alarm cutoff (ACO), and four user-definable alarm input and output contacts.

Audible alarm contacts are in the LOCAL ALARM AUD pin field and visual contacts are in the LOCAL ALARM VIS pin field. Both of these alarms are in the LOCAL ALARMS category. User-definable contacts are in the ENVIR ALARM IN (external alarm) and ENVIR ALARM OUT (external control) pin fields. These alarms are in the ENVIR ALARMS category; you must have the AIC card installed to use the ENVIR ALARMS. Alarm contacts are Normally Open (N/O), meaning that the system closes the alarm contacts when the corresponding alarm conditions are present. Each alarm contact consists of two wire-wrap pins on the shelf assembly backplane. Visual and audible alarm contacts are classified as Critical, Major, Minor, and Remote. Figure 13-42 on page 13-47 shows alarm pin assignments.

Visual and audible alarms are typically wired to trigger an alarm light or bell at a central alarm collection point when the corresponding contacts are closed. You can use the ACO pins to activate a remote ACO for audible alarms. You can also activate the ACO function by pressing the ACO button on the TCC2 card faceplate. The ACO function clears all audible alarm indications. After clearing the audible alarm indication, the alarm is still present and viewable in the Alarms tab in CTC.

13.13.2 Timing Connections

The ONS 15454 ANSI backplane supports two building integrated timing supply (BITS) clock pin fields. The first four BITS pins, rows 3 and 4, support output and input from the first external timing device. The last four BITS pins, rows 1 and 2, perform the identical functions for the second external timing device. Table 13-9 lists the pin assignments for the BITS timing pin fields.

Note For timing connection, use 100-ohm shielded BITS clock cable pair #22 or #24 AWG (0.51 mm² [0.020 inch] or 0.64 mm² [0.0252 inch]), twisted-pair T1-type.

Table 13-9 BITS External Timing Pin Assignments

External Device	Contact	Tip and Ring	Function
First external device	A3 (BITS 1 Out)	Primary ring (–)	Output to external device
	B3 (BITS 1 Out)	Primary tip (+)	Output to external device
	A4 (BITS 1 In)	Secondary ring (–)	Input from external device
	B4 (BITS 1 In)	Secondary tip (+)	Input from external device
Second external device	A1 (BITS 2 Out)	Primary ring (–)	Output to external device
	B1 (BITS 2 Out)	Primary tip (+)	Output to external device
	A2 (BITS 2 In)	Secondary ring (–)	Input from external device
	B2 (BITS 2 In)	Secondary tip (+)	Input from external device

Note Refer to Telcordia SR-NWT-002224 for rules about provisioning timing references.

13.13.3 LAN Connections

Use the LAN pins on the ONS 15454 ANSI backplane to connect the ONS 15454 ANSI to a workstation or Ethernet LAN, or to a LAN modem for remote access to the node. You can also use the LAN port on the TCC2 faceplate to connect a workstation or to connect the ONS 15454 ANSI to the network. Table 13-10 shows the LAN pin assignments.

Before you can connect an ONS 15454 ANSI to other ONS 15454 ANSI shelves or to a LAN, you must change the default IP address that is shipped with each ONS 15454 ANSI (192.1.0.2).

Table 13-10 LAN Pin Assignments

Pin Field	Backplane Pins	RJ-45 Pins
LAN 1 Connecting to data circuit-terminating equipment (DCE[1], a hub or switch)	B2	1
	A2	2
	B1	3
	A1	6
LAN 1 Connecting to data terminal equipment (DTE) (a PC/workstation or router)	B1	1
	A1	2
	B2	3
	A2	6

1. The Cisco ONS 15454 ANSI is DCE.

13.13.4 TL1 Craft Interface Installation

You can use the craft pins on the ONS 15454 ANSI backplane or the EIA/TIA-232 port on the TCC2 faceplate to create a VT100 emulation window to serve as a TL1 craft interface to the ONS 15454 ANSI. Use a straight-through cable to connect to the EIA/TIA-232 port. Table 13-11 shows the pin assignments for the CRAFT pin field.

Note You cannot use the craft backplane pins and the EIA/TIA-232 port on the TCC2 card simultaneously.

Table 13-11 Craft Interface Pin Assignments

Pin Field	Contact	Function
Craft	A1	Receive
	A2	Transmit
	A3	Ground
	A4	DTR

13.14 Cards and Slots

ONS 15454 cards have electrical plugs at the back that plug into electrical connectors on the shelf assembly backplane. When the ejectors are fully closed, the card plugs into the assembly backplane. Figure 13-43 shows card installation for an ONS 15454 ANSI shelf.

Figure 13-43 Installing Cards in the ONS 15454 ANSI

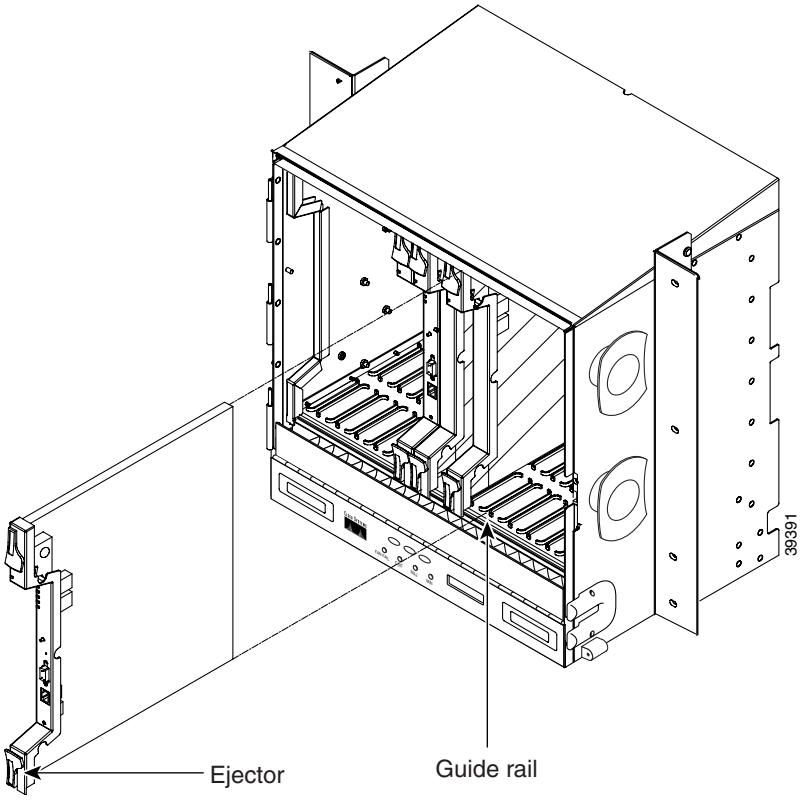

Figure 13-44 shows card installation in the ONS 15454 ETSI shelf.

Figure 13-44 Installing Cards in the ONS 15454 ETSI Shelf

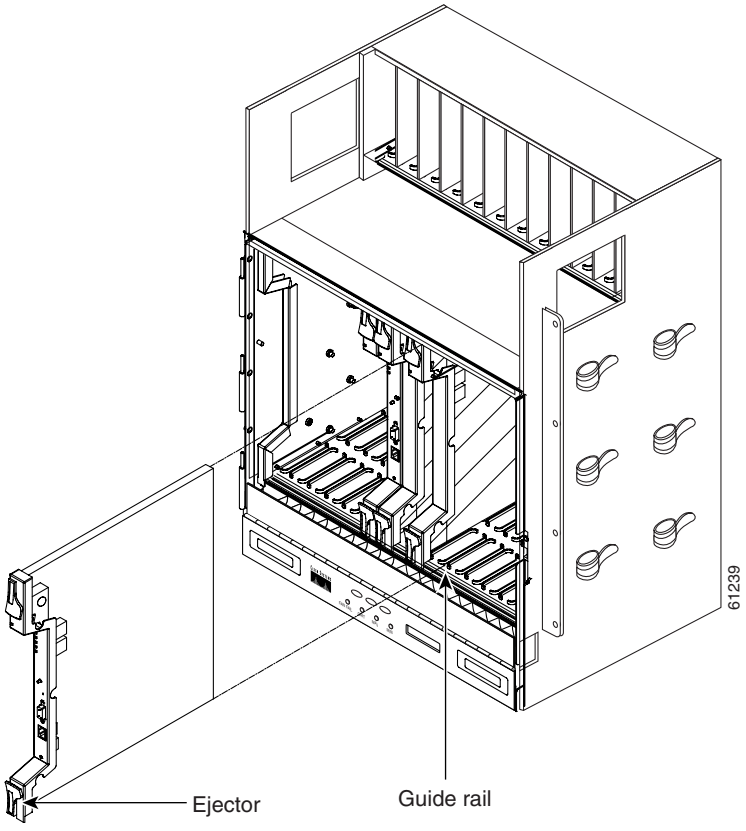

13.14.1 Card Slot Requirements

The ONS 15454 shelf assemblies have 17 card slots numbered sequentially from left to right. Slots 7 and 11 are dedicated to TCC2 cards. Slot 9 is reserved for the optional AIC or AIC-I card.

Caution Do not operate the ONS 15454 with a single TCC2 card. Always operate the shelf assembly with one working and one protect card of the same type.

Shelf assembly slots have symbols indicating the type of cards that you can install in them. Each ONS 15454 card has a corresponding symbol. The symbol on the card must match the symbol on the slot.

Table 13-12 shows the slot and card symbol definitions.

Table 13-12 Slot and Card Symbols

Symbol Color/Shape	Definition
Orange/Circle	Slots 1 to 6 and 12 to 17. Only install cards with a circle symbol on the faceplate.
Blue/Triangle	Slots 5, 6, 12, and 13. Only install cards with circle or a triangle symbol on the faceplate.

Table 13-12 Slot and Card Symbols (continued)

Symbol Color/Shape	Definition
Purple/Square	TCC2 slot, Slots 7 and 11. Only install cards with a square symbol on the faceplate.
Green/Cross	Cross-connect (XC/XCVT/XC10G) slot, Slots 8 and 10. Only install ONS 15454 cards with a cross symbol on the faceplate.
Red/P	Protection slot in 1:N protection schemes.
Red/Diamond	AIC/AIC-I slot, Slot 9. Only install cards with a diamond symbol on the faceplate.
Gold/Star	Slots 1 to 4 and 14 to 17. Only install cards with a star symbol on the faceplate.
Blue/Hexagon	(Only used with the 15454-SA-HD shelf assembly.) Slots 3 and 15. Only install ONS 15454 ANSI cards with a blue hexagon symbol on the faceplate.

13.14.2 Card Replacement

To replace an ONS 15454 card with another card of the same type, you do not need to make any changes to the database; remove the old card and replace it with a new card. To replace a card with a card of a different type, physically remove the card and replace it with the new card, then delete the original card from CTC. For specifics, see Chapter 11, "Maintain the Node."

Caution Removing any active card from the ONS 15454 can result in traffic interruption. Use caution when replacing cards and verify that only inactive or standby cards are being replaced. If the active card needs to be replaced, switch it to standby prior to removing the card from the node. For traffic switching procedures, refer to the "DLP-G179 Apply a Force Y-Cable or Splitter Protection Switch" task on page 9-24.

Note An improper removal (IMPROPRMVL) alarm is raised whenever a card pull (reseat) is performed, unless the card is deleted in CTC first. The alarm clears after the card replacement is complete.

Warning **Do not reach into a vacant slot or chassis while you install or remove a module or a fan. Exposed circuitry could constitute an energy hazard.**

13.15 Ferrites (ANSI Only)

Place third-party ferrites on certain cables to dampen electromagnetic interference (EMI) from the ONS 15454 ANSI. Ferrites must be added to meet the requirements of Telcordia GR-1089-CORE. Refer to the ferrite manufacturer documentation for proper use and installation of the ferrites. Ferrite placements on the ONS 15454 ANSI can include power cables, AMP Champ connectors, baluns, BNC/SMB connectors, and the wire-wrap pin field.

Card Reference

Note The terms "Unidirectional Path Switched Ring" and "UPSR" may appear in Cisco literature. These terms do not refer to using Cisco ONS 15xxx products in a unidirectional path switched ring configuration. Rather, these terms, as well as "Path Protected Mesh Network" and "PPMN," refer generally to Cisco's path protection feature, which may be used in any topological network configuration. Cisco does not recommend using its path protection feature in any particular topological network configuration.

This chapter describes Cisco ONS 15454 dense wavelength division multiplexing (DWDM) card and client card features and functions. It also describes the common control cards needed to support them as well as the optical plug-in modules (SFPs). For installation and card turn-up procedures, refer to Chapter 3, "Turn Up a Node." For card safety and compliance information, refer to the *Cisco Optical Transport Products Safety and Compliance Information* document.

Note Unless otherwise specified, "ONS 15454" refers to both ANSI and ETSI shelf assemblies.

Chapter topics include:

- 14.1 Card Overview, page 14-2
- 14.2 Common Control Cards, page 14-11
- 14.3 Front Mount Electrical Connections, page 14-21
- 14.4 Optical Service Channel Cards, page 14-26
- 14.5 Optical Amplifier Cards, page 14-35
- 14.6 Multiplexer and Demultiplexer Cards, page 14-44
- 14.7 Optical Add/Drop Multiplexer Cards, page 14-62
- 14.8 Transponder and Muxponder Cards, page 14-86
- 14.9 Transponder and Muxponder Protection, page 14-119
- 14.10 Far-End Laser Control (FELC), page 14-121
- 14.11 Transponder and Muxponder Jitter Considerations, page 14-121
- 14.12 Transponder and Muxponder Termination Modes, page 14-122
- 14.13 SFP Modules, page 14-123

14.1 Card Overview

The card overview section lists the cards described in this chapter and summarizes card functions, power consumption, and temperature ranges of the optical cards covered in this reference section.

Note Each card is marked with a symbol that corresponds to a slot (or slots) on the ONS 15454 shelf assembly. The cards are then installed into slots displaying the same symbols. See the "13.14.1 Card Slot Requirements" section on page 13-51 for a list of slots and symbols.

14.1.1 Common Control Cards

The following common control cards are needed to support the functions of the DWDM, transponder, and muxponder cards:

- TCC2
- AIC-I
- AIC (ANSI only)

14.1.2 Front Mount Electrical Connections (ETSI only)

The following front mount electrical connections (FMECs) are needed to support the functions of the DWDM, transponder, and muxponder cards:

- MIC-A/P
- MIC-C/T/P

14.1.3 DWDM Cards

ONS 15454 DWDM cards are grouped into the following categories:

- Optical service channel cards—These cards provide bidirectional channels that connect ONS 15454 DWDM nodes and transport general-purpose information (including CTC management) without affecting the client traffic. ONS 15454 optical service channel cards include the Optical Service Channel Module (OSCM) and the Optical Service Channel and Combiner/Separator Module (OSC-CSM).
- Optical amplifier cards—These cards are used in amplified DWDM nodes, including hub nodes, amplified OADM nodes, and line amplified nodes. Optical amplifier cards include the Optical Preamplifier (OPT-PRE) and Optical Booster (OPT-BST) amplifier.
- Dispersion compensation units—These cards are installed in the ONS 15454 dispersion compensation shelf when optical preamplifier cards are installed in the DWDM node. Each DCU module can compensate a maximum of 65 km of single-mode fiber (SMF-28) span. DCUs can be cascaded to extend the compensation to 130 km.
- Multiplexer and demultiplexer cards—These cards multiplex and demultiplex DWDM optical channels. ONS 15454 multiplexer and demultiplexer cards include the 32-Channel Multiplexer (32MUX-O), the 32-Channel Demultiplexer (32DMX-O), the single-slot 32-Channel Demultiplexer (32DMX), and the 4-Channel Multiplexer/Demultiplexer (4MD-xx.x).

- Optical Add/Drop Multiplexer (OADM) cards—These cards are mainly divided into two groups: band OADM and channel OADM cards. Band OADM cards add and drop one or four bands of adjacent channels; they include the 4-Band OADM (AD-4B-xx.x) and the 1-Band OADM (AD-1B-xx.x). Channel OADM cards add and drop one, two, or four adjacent channels; they include the 4-Channel OADM (AD-4C-xx.x), the 2-Channel OADM (AD-2C-xx.x), and the 1-Channel OADM (AD-1C-xx.x). This section also covers the 32-Channel Wavelength Selective Switch (32WSS) used to implement Reconfigurable OADM (ROADM) functionality.

14.1.4 Transponder and Muxponder Cards

The purpose of a transponder (TXP) or muxponder (MXP) card is to convert the "gray" optical client interface signals into trunk signals that operate in the "colored" DWDM wavelength range[1]. Transponding or muxponding is the process of converting the signals between the client and trunk wavelengths.

A muxponder generally handles several client signals. It aggregates, or multiplexes, lower rate client signals together and sends them out over a higher rate trunk port. Likewise, it demultiplexes optical signals coming in on a trunk and sends them out to individual client ports. A transponder converts a single client signal to a single trunk signal and converts a single incoming trunk signal to a single client signal.

All of the TXP and MXP cards perform optical to electrical to optical (OEO) conversion. As a result, they are not optically transparent cards. The reason for this is that the cards must operate on the signals passing through them, so it is necessary to do an OEO conversion.

On the other hand, the termination mode for all of the TXPs and MXPs, which is done at the electrical level, can be configured to be transparent. In this case, neither the Line nor the Section overhead is terminated. The cards can also be configured so that either Line or Section overhead can be terminated, or both can be terminated.

Note The MXP_2.5G_10G card, by design, when configured in the transparent termination mode, actually does terminate some of the bytes. See Table 14-66 on page 14-122 for details.

14.1.5 Card Summary

Table 14-1 lists and summarizes the functions of each Cisco ONS 15454 DWDM and client card.

Table 14-1 DWDM and Client Cards for the ONS 15454

Card	Port Description	For Additional Information
Optical Service Channel Cards		
OSCM	The OSCM has one set of optical ports and one Ethernet port located on the faceplate. It operates in Slots 8 and 10.	See the "14.4.1 OSCM Card" section on page 14-26.

1. Client-facing gray optical signals generally operate at shorter wavelengths, whereas DWDM colored optical signals are in the longer wavelength range (for example, 1490 nm = violet; 1510 nm = blue; 1530 nm = green; 1550 nm = yellow; 1570 nm = orange; 1590 nm = red; 1610 nm = brown). Some of the newer client-facing SFPs, however, operate in the colored region.

Table 14-1 DWDM and Client Cards for the ONS 15454 (continued)

Card	Port Description	For Additional Information
OSC-CSM	The OSC-CSM has three sets of optical ports and one Ethernet port located on the faceplate. It operates in Slots 1 to 6 and 12 to 17.	See the "14.4.2 OSC-CSM Card" section on page 14-30.
Optical Amplifier Cards		
OPT-PRE	The OPT-PRE amplifier has five optical ports (three sets) located on the faceplate. It operates in Slots 1 to 6 and 12 to 17.	See the "14.5.1 OPT-PRE Amplifier" section on page 14-35.
OPT-BST	The OPT-BST amplifier has four sets of optical ports located on the faceplate. It operates in Slots 1 to 6 and 12 to 17.	See the "14.5.2 OPT-BST Amplifier Card" section on page 14-39.
Multiplexer and Demultiplexer Cards		
32MUX-O	The 32MUX-O has five sets of ports located on the faceplate. It operates in Slots 1 to 5 and 12 to 16.	See the "14.6.1 32MUX-O Card" section on page 14-44.
32DMX-O	The 32DMX-O has five sets of ports located on the faceplate. It operates in Slots 1 to 5 and 12 to 16	See the "14.6.2 32DMX-O Card" section on page 14-48.
32DMX	The 32DMX has five sets of ports located on the faceplate. It operates in Slots 1 to 6 and 12 to 17	See the 14.6.3 32DMX Card, page 14-52
4MD-xx.x	The 4MD-xx.x card has five sets of ports located on the faceplate. It operates in Slots 1 to 6 and 12 to 17.	See the "14.6.4 4MD-xx.x Card" section on page 14-57.
Optical Add/Drop Multiplexer Cards		
AD-1C-xx.x	The AD-1C-xx.x card has three sets of ports located on the faceplate. It operates in Slots 1 to 6 and 12 to 17.	See the "14.7.1 AD-1C-xx.x Card" section on page 14-62.
AD-2C-xx.x	The AD-2C-xx.x card has four sets of ports located on the faceplate. It operates in Slots 1 to 6 and 12 to 17.	See the "14.7.2 AD-2C-xx.x Card" section on page 14-65.
AD-4C-xx.x	The AD-4C-xx.x card has six sets of ports located on the faceplate. It operates in Slots 1 to 6 and 12 to 17.	See the "14.7.3 AD-4C-xx.x Card" section on page 14-69.
AD-1B-xx.x	The AD-1B-xx.x card has three sets of ports located on the faceplate. It operates in Slots 1 to 6 and 12 to 17.	See the "14.7.4 AD-1B-xx.x Card" section on page 14-74.
AD-4B-xx.x	The AD-4B-xx.x card has six sets of ports located on the faceplate. It operates in Slots 1 to 6 and 12 to 17.	See the "14.7.5 AD-4B-xx.x Card" section on page 14-78.
32WSS	The 32WSS card has seven sets of ports located on the faceplate. It operates in Slots 1 to 5 and 12 to 16.	See the 14.7.6 32WSS Card, page 14-81
Transponder and Muxponder Cards		
TXP_MR_10G	The TXP_MR_10G card has two sets of ports located on the faceplate.	See the 14.8.1 TXP_MR_10G Card, page 14-87

Table 14-1 DWDM and Client Cards for the ONS 15454 (continued)

Card	Port Description	For Additional Information
TXP_MR_10E	The TXP_MR_10E card has two sets of ports located on the faceplate.	See the 14.8.2 TXP_MR_10E Card, page 14-90
TXP_MR_2.5G	The TXP_MR_2.5G card has two sets of ports located on the faceplate.	See the 14.8.3 TXP_MR_2.5G and TXPP_MR_2.5G Cards, page 14-94
TXPP_MR_2.5G	The TXPP_MR_2.5G card has three sets of ports located on the faceplate.	See the 14.8.3 TXP_MR_2.5G and TXPP_MR_2.5G Cards, page 14-94
MXP_2.5G_10G	The MXP_2.5G_10G card has 9 sets of ports located on the faceplate.	See the 14.8.4 MXP_2.5G_10G Card, page 14-101.
MXP_2.5G_10E	The MXP_2.5G_10E card has 9 sets of ports located on the faceplate.	See the 14.8.5 MXP_2.5G_10E Card, page 14-104
MXP_MR_2.5G	The MXP_MR_2.5G card has 9 sets of ports located on the faceplate.	See the 14.8.6 MXP_MR_2.5G and MXPP_MR_2.5G Cards, page 14-113
MXPP_MR_2.5G	The MXPP_MR_2.5G card has 10 sets of ports located on the faceplate.	See the 14.8.6 MXP_MR_2.5G and MXPP_MR_2.5G Cards, page 14-113

14.1.6 Card Compatibility

Table 14-2 lists the Cisco Transport Controller (CTC) software compatibility for each DWDM and client card.

Table 14-2 DWDM and Client Card CTC Software Release Compatibility

	Compatibility		
Card Type	**R4.5**	**R4.6**	**R4.7**
Optical Service Channel Cards	Yes	Yes	Yes
OSCM	Yes	Yes	Yes
OSC-CSM	Yes	Yes	Yes
Optical Amplifier Cards	Yes	Yes	Yes
OPT-PRE	Yes	Yes	Yes
OPT-BST	Yes	Yes	Yes
Multiplexer and Demultiplexer Cards	Yes	Yes	Yes
32MUX-O	Yes	Yes	Yes
32DMX-O	Yes	Yes	Yes
32DMX	No	No	Yes
4MD-xx.x	Yes	Yes	Yes
Optical Add/Drop Multiplexer Cards	Yes	Yes	Yes
AD-1C-xx.x	Yes	Yes	Yes
AD-2C-xx.x	Yes	Yes	Yes
AD-4C-xx.x	Yes	Yes	Yes
AD-1B-xx.x	Yes	Yes	Yes
AD-4B-xx.x	Yes	Yes	Yes
32WSS	No	No	Yes
Transponder and Muxponder Cards	Yes	Yes	Yes
TXP_MR_10G	Yes	Yes	Yes
TXP_MR_10E	No	No	Yes
TXP_MR_2.5G	Yes	Yes	Yes
TXPP_MR_2.5G	Yes	Yes	Yes
MXP_2.5G_10G	Yes	Yes	Yes
MXP_2.5G_10E	No	No	Yes
MXP_MR_2.5G	No	No	Yes
MXPP_MR_2.5G	No	No	Yes

14.1.7 Multiplexer, Demultiplexer, and OADM Card Interface Classes

The 32MUX-O, 32WSS, 32DMX, 32DMX-O, 4MD-xx.x, AD-1C-xx.x, AD-2C-xx.x, and AD-4C-xx.x cards have different input and output optical channel signals, depending upon the interface card where the input signal originates. The input interface cards have been grouped in classes listed in Table 14-3. The subsequent tables list the optical performances and output power of each interface class.

Table 14-3 ONS 15454 Card Interfaces Assigned to Input Power Classes

Input Power Class	Card
A	10 Gbps multirate transponder (TXP_MR_10G or TXP_MR_10E) with forward error correction (FEC) enabled or 10 Gbps muxponder (MXP_2.5G_10G or MXP_2.5G_10E) with FEC enabled
B	10 Gbps multirate transponder (TXP_MR_10G) without FEC or 10 Gbps muxponder (MXP_2.5G_10G) with FEC disabled
C	OC-192 LR ITU, TXP_MR_10E without FEC
D	2.5-Gbps multirate transponder (TXP_MR_2.5G), both protected and unprotected, with FEC enabled
E	2.5-Gbps multirate transponder (TXP_MR_2.5G), both protected and unprotected, with FEC disabled and reshape, regenerate, and retime (3R) mode enabled, or OC-48 100 GHz DWDM muxponder (MXP_MR_2.5G)
F	2.5-Gbps multirate transponder (TXP_MR_2.5G), both protected and unprotected, in regenerate and reshape (2R) mode
G	OC-48 ELR 100 GHz
H	2/4 port GbE Transponder (GBIC WDM 100GHz)
I	TXP_MR_10E with extended FEC (E-FEC) or MXP_2.5G_10E with E-FEC

10-Gbps cards that provide signal input to OADM cards have the optical performances listed in Table 14-4. 2.5-Gbps card interface performances are listed in Table 14-5 on page 14-8 and Table 14-6 on page 14-9.

Table 14-4 10-Gbps Interface Optical Performances

Parameter	Class A		Class B		Class C	Class I	
Type	Power limited	OSNR[1] limited	Power limited	OSNR limited	OSNR limited	Power limited	OSNR limited
Maximum bit rate	10 Gbps		10 Gbps		10 Gbps	10 Gbps	
Regeneration	3R[2]		3R		3R	3R	
FEC	Yes		No		No	Yes (E-FEC)	
Threshold	Optimum		Average		Average	Optimum	
Maximum BER[3]	10^{-15}		10^{-12}		10^{-12}	10^{-15}	
OSNR[1] sensitivity	23 dB	9 dB	23 dB	19 dB	19 dB	20 dB	8 dB
Power sensitivity	–24 dBm	–18 dBm	–21 dBm	–20 dBm	–22 dBm	–26 dBm	–18 dBm
Power overload	-8 dBm		-8 dBm		-9 dBm	-8 dBm	

Table 14-4 10-Gbps Interface Optical Performances (continued)

Parameter	Class A		Class B		Class C	Class I	
Type	Power limited	OSNR[1] limited	Power limited	OSNR limited	OSNR limited	Power limited	OSNR limited
Transmitted Power Range[4]							
10-Gbps multirate transponder/10Gbps FEC transponder (TXP_MR_10G)	+2.5 to 3.5 dBm		+2.5 to 3.5 dBm		–	–	
OC-192 LR ITU	–		–		+3.0 to 6.0 dBm	–	
10-Gbps multirate transponder/10Gbps FEC transponder (TXP_MR_10E)	+3.0 to 6.0 dBm		+3.0 to 6.0 dBm		–	+3.0 to 6.0 dBm	
Dispersion compensation tolerance	±800 ps/nm		±1,000 ps/nm		±1,000 ps/nm	±800 ps/nm	

1. OSNR = optical signal-to-noise ratio
2. 3R = retime, reshape, and regenerate
3. BER = bit error rate
4. These values, decreased by patch cord and connector losses, are also the input power values for the OADM cards.

Table 14-5 2.5-Gbps Interface Optical Performances (Part 1)

Parameter	Class D		Class E		Class F	Class G	
Type	Power limited	OSNR[1] limited	Power limited	OSNR limited	OSNR limited	Power limited	OSNR limited
Maximum bit rate	2.5 Gbps		2.5 Gbps		2.5 Gbps	2.5 Gbps	
Regeneration	3R[2]		3R		2R	3R	
FEC	Yes		No		No	No	
Threshold	Average		Average		Average	Average	
Maximum BER[3]	10^{-15}		10^{-12}		10^{-12}	10^{-12}	
OSNR[1] sensitivity	14 dB	6 dB	14 dB	10 dB	15 dB	14 dB	11 dB
Power sensitivity	–31 dBm	–25 dBm	–30 dBm	–23 dBm	–24 dBm	–27 dBm	–33 dBm
Power overload	-9 dBm		-9 dBm		-9 dBm	-9 dBm	
Transmitted Power Range[4]							

Table 14-5 2.5-Gbps Interface Optical Performances (continued) (Part 1)

Parameter	Class D		Class E		Class F	Class G	
Type	Power limited	OSNR[1] limited	Power limited	OSNR limited	OSNR limited	Power limited	OSNR limited
TXP_MR_2.5G	–1.0 to 1.0 dBm		–1.0 to 1.0 dBm		–1.0 to 1.0 dBm	–2.0 to 0 dBm	
TXPP_MR_2.5G	–4.5 to –2.5 dBm		–4.5 to –2.5 dBm		–4.5 to –2.5 dBm		
MXP_MR_2.5G	–		+2.0 to +4.0 dBm		–		
MXPP_MR_2.5G	–		-1.5 to +0.5 dBm		–		
Dispersion compensation tolerance	-1200 to +5400 ps/nm		-1200 to +5400 ps/nm		-1200 to +3300 ps/nm	-1200 to +3300 ps/nm	

1. OSNR = optical signal-to-noise ratio
2. 3R = retime, reshape, and regenerate
3. BER = bit error rate
4. These values, decreased by patch cord and connector losses, are also the input power values for the OADM cards.

Table 14-6 2.5-Gbps Interface Optical Performances (Part 2)

Parameter	Class H		Class J
Type	Power limited	OSNR[1] limited	Power limited
Maximum bit rate	1.25 Gbps		2.5 Gbps
Regeneration	3R[2]		3R
FEC	No		No
Threshold	Average		Average
Maximum BER[3]	10^{-12}		10^{-12}
OSNR[1] sensitivity	13 dB	8 dB	12 dB
Power sensitivity	–28 dBm	–18 dBm	–26 dBm
Power overload	-7 dBm		-17 dBm
Transmitted Power Range			
2/4 port GbE Transponder (GBIC WDM 100GHz)	+2.5 to 3.5 dBm		–
Dispersion compensation tolerance	-1000 to +3600 ps/nm		-1000 to +3200 ps/nm

1. OSNR = optical signal-to-noise ratio
2. 3R = retime, reshape, and regenerate
3. BER = bit error rate

14.1.8 DWDM Card Channel Allocation Plan

ONS 15454 DWDM multiplexers, demultiplexers, channel OADM, and band OADM cards are designed for use with specific channels. In most cases, the channels for these cards are either numbered (1 to 32) or delimited (odd or even). Client interfaces must comply with these channel assignments to be compatible with ONS 15454.

Table 14-7 lists the channel IDs and wavelengths assigned to the DWDM channels.

Table 14-7 DWDM Channel Allocation Plan

Channel Number	Channel ID	Frequency (THz)	Wavelength (nm)
1	30.3	195.9	1530.33
2	31.2	195.8	1531.12
3	31.9	195.7	1531.90
4	32.6	195.6	1532.68
5	34.2	195.4	1534.25
6	35.0	195.3	1535.04
7	35.8	195.2	1535.82
8	36.6	195.1	1536.61
9	38.1	194.9	1538.19
10	38.9	194.8	1538.98
11	39.7	194.7	1539.77
12	40.5	194.6	1540.56
13	42.1	194.4	1542.14
14	42.9	194.3	1542.94
15	43.7	194.2	1543.73
16	44.5	194.1	1544.53
17	46.1	193.9	1546.12
18	46.9	193.8	1546.92
19	47.7	193.7	1547.72
20	48.5	193.6	1548.51
21	50.1	193.4	1550.12
22	50.9	193.3	1550.92
23	51.7	193.2	1551.72
24	52.5	193.1	1552.52
25	54.1	192.9	1554.13
26	54.9	192.8	1554.94
27	55.7	192.7	1555.75
28	56.5	192.6	1556.55
29	58.1	192.4	1558.17
30	58.9	192.3	1558.98
31	59.7	192.2	1559.79
32	60.6	192.1	1560.61

14.2 Common Control Cards

This section describes the common control cards (TCC2, AIC, and AIC-I).

14.2.1 TCC2 Card

The Advanced Timing, Communications, and Control (TCC2) card performs system initialization, provisioning, alarm reporting, maintenance, diagnostics, IP address detection/resolution, SONET section overhead (SOH) data communications channel/generic communications channel (DCC/GCC) termination, optical service channel (OSC) DWDM data communications network (DCN) termination, and system fault detection for the ONS 15454. The TCC2 also ensures that the system maintains Stratum 3 (Telcordia GR-253-CORE) timing requirements. It monitors the supply voltage of the system.

Note The TCC2 card requires Software Release 4.0.0 or later.

Note The LAN interface of the TCC2 card meets the standard Ethernet specifications by supporting a cable length of 328 ft (100 m) at temperatures from 32 to 149 degrees Fahrenheit (0 to 65 degrees Celsius).

Figure 14-1 shows the faceplate and block diagram for the TCC2.

Figure 14-1 TCC2 Faceplate and Block Diagram

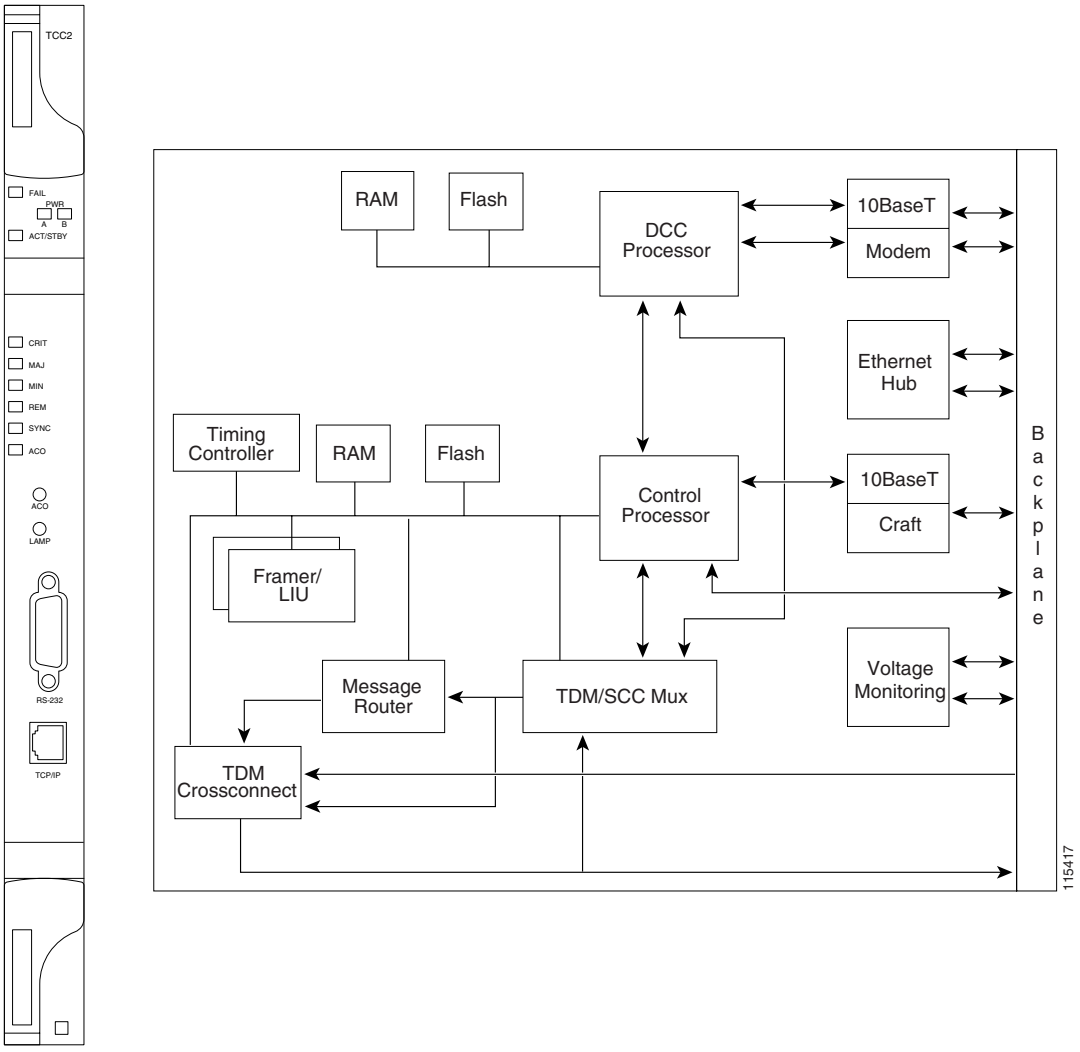

14.2.1.1 TCC2 Functionality

The TCC2 card terminates up to 32 DCCs. The TCC2 hardware is prepared for 84 DCCs, which will be available in a future software release.

The node database, IP address, and system software are stored in TCC2 nonvolatile memory, which allows quick recovery in the event of a power or card failure.

The TCC2 performs all system-timing functions for each ONS 15454. The TCC2 monitors the recovered clocks from each traffic card and two building integrated timing supply (BITS) ports for frequency accuracy. The TCC2 selects a recovered clock, a BITS, or an internal Stratum 3 reference as the system-timing reference. You can provision any of the clock inputs as primary or secondary timing sources. A slow-reference tracking loop allows the TCC2 to synchronize with the recovered clock, which provides holdover if the reference is lost.

The TCC2 monitors both supply voltage inputs on the shelf. An alarm is generated if one of the supply voltage inputs has a voltage out of the specified range.

Install TCC2 cards in Slots 7 and 11 for redundancy. If the active TCC2 fails, traffic switches to the protect TCC2.

The TCC2 card has two built-in interface ports for accessing the system: an RJ-45 10BaseT LAN interface and an EIA/TIA-232 ASCII interface for local craft access. It also has a 10BaseT LAN port for user interfaces via the backplane.

Note Cisco does not support operation of the ONS 15454 with only one TCC2 card. For full functionality and to safeguard your system, always operate with two TCC2 cards.

Note When a second TCC2 card is inserted into a node, it synchronizes its software, its backup software, and its database with the active TCC2. If the software version of the new TCC2 does not match the version on the active TCC2, the newly inserted TCC2 copies from the active TCC2, taking about 15 to 20 minutes to complete. If the backup software version on the new TCC2 does not match the version on the active TCC2, the newly inserted TCC2 copies the backup software from the active TCC2 again, taking about 15 to 20 minutes. Copying the database from the active TCC2 takes about 3 minutes. Depending on the software version and backup version the new TCC2 started with, the entire process can take between 3 and 40 minutes.

14.2.1.2 TCC2 Card-Level Indicators

The TCC2 faceplate has eight LEDs. Table 14-8 describes the two card-level LEDs on the TCC2 faceplate.

Table 14-8 TCC2 Card-Level Indicators

Card-Level LEDs	Definition
Red FAIL LED	This LED is on during reset. The FAIL LED flashes during the boot and write process. Replace the card if the FAIL LED persists.
ACT/STBY LED Green (Active) Yellow (Standby)	Indicates the TCC2 is active (green) or in standby (yellow) mode. The ACT/STBY LED also provides the timing reference and shelf control. When the active TCC2 is writing to its database or to the standby TCC2 database, the card LEDs blink. To avoid memory corruption, do not remove the TCC2 when the active or standby LED is blinking.

14.2.1.3 Network-Level Indicators

Table 14-9 describes the six network-level LEDs on the TCC2 faceplate.

Table 14-9 TCC2 Network-Level Indicators

System-Level LEDs	Definition
Red CRIT LED	Indicates critical alarms in the network at the local terminal.
Red MAJ LED	Indicates major alarms in the network at the local terminal.
Yellow MIN LED	Indicates minor alarms in the network at the local terminal.
Red REM LED	Provides first-level alarm isolation. The remote (REM) LED turns red when an alarm is present in one or more of the remote terminals.

Table 14-9 TCC2 Network-Level Indicators (continued)

System-Level LEDs	Definition
Green SYNC LED	Indicates that node timing is synchronized to an external reference.
Green ACO LED	After pressing the alarm cutoff (ACO) button, the ACO LED turns green. The ACO button opens the audible alarm closure on the backplane. ACO is stopped if a new alarm occurs. After the originating alarm is cleared, the ACO LED and audible alarm control are reset.

14.2.2 AIC Card

The optional Alarm Interface Controller (AIC) card provides customer-defined alarm input/output (I/O) and supports local and express orderwire. Figure 14-2 shows the AIC faceplate and a block diagram of the card.

Figure 14-2 AIC Faceplate and Block Diagram

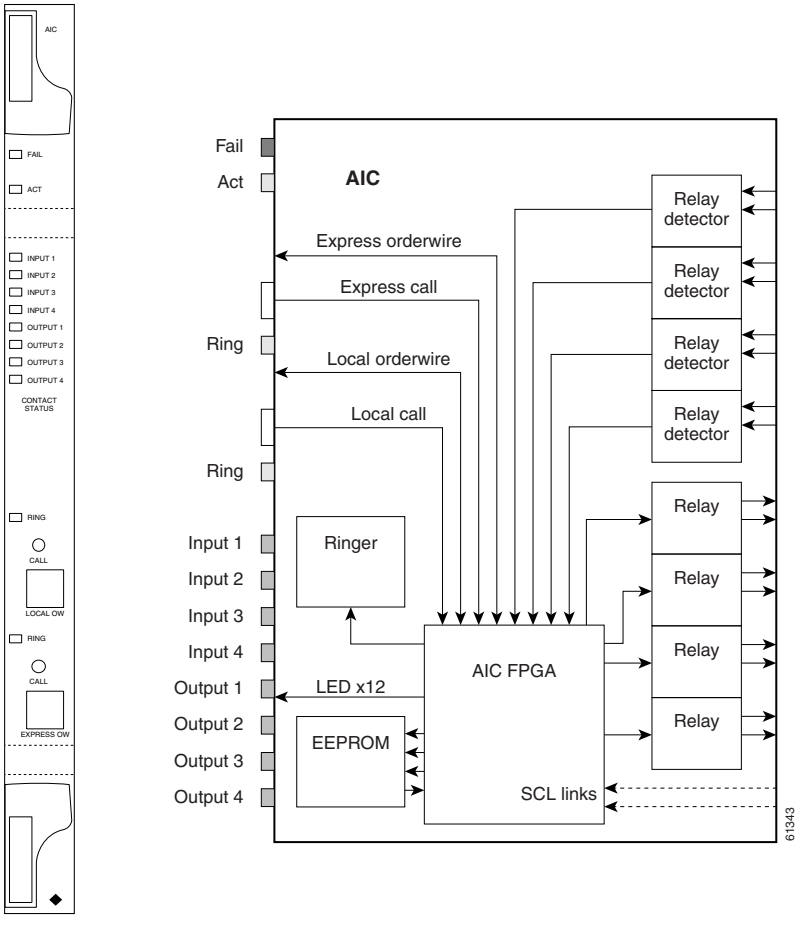

14.2.2.1 External Alarms and Controls

The AIC card provides provisionable input/output alarm contact closures for up to four external alarms and four external controls. The physical connections are made using the backplane wire-wrap pins. The alarms are defined using CTC and Transaction Language One (TL1). For instructions, see the "DLP-G23 Install Alarm Wires on the Backplane (ANSI Only)" task on page 1-53.

Each alarm contact has a corresponding LED on the front panel of the AIC that indicates the status of the alarm. External alarms (input contacts) are typically used for external sensors such as open doors, temperature sensors, flood sensors, and other environmental conditions. External controls (output contacts) are typically used to drive visual or audible devices such as bells and lights, but they can control other devices such as generators, heaters, and fans.

You can program each of the four input alarm contacts separately. Choices include:

- Alarm on Closure or Alarm on Open
- Alarm severity of any level (Critical, Major, Minor, Not Alarmed, Not Reported)
- Service Affecting or Non-Service Affecting alarm-service level
- 63-character alarm description for CTC display in the alarm log. You cannot assign the fan-tray abbreviation for the alarm; the abbreviation reflects the generic name of the input contacts. The alarm condition remains raised until the external input stops driving the contact or you provision the alarm input.

The output contacts can be provisioned to close on a trigger or to close manually. The trigger can be a local alarm severity threshold, a remote alarm severity, or a virtual wire:

- Local NE alarm severity: A hierarchy of Not Reported, Not Alarmed, Minor, Major, and Critical alarm severities that you set to cause output closure. For example, if the trigger is set to Minor, a Minor alarm or above is the trigger.
- Remote NE alarm severity: Same as the local NE alarm severity but applies to remote alarms only.
- Virtual wire entities: You can provision any environmental alarm input to raise a signal on any virtual wire on external outputs 1 through 4 when the alarm input is an event. You can provision a signal on any virtual wire as a trigger for an external control output.

You can also program the output alarm contacts (external controls) separately. In addition to provisionable triggers, you can manually force each external output contact to open or close. Manual operation takes precedence over any provisioned triggers that might be present.

14.2.2.2 Orderwire

Orderwire allows a craftsperson to plug a phoneset into an ONS 15454 and communicate with craftspeople working at other ONS 15454s or other facility equipment. The orderwire is a pulse code modulation (PCM) encoded voice channel that uses E1 or E2 bytes in section/line overhead.

The AIC allows simultaneous use of both local (section overhead signal) and express (line overhead channel) orderwire channels on a SONET ring or particular optics facility. Local orderwire also allows communication at regeneration sites when the regenerator is not a Cisco device.

You can provision orderwire functions with CTC similar to the current provisioning model for DCC/GCC channels. In CTC, you provision the orderwire communications network during ring turn-up so that all NEs on the ring can reach one another. Orderwire terminations (that is, the optics facilities that receive and process the orderwire channels) are provisionable. Both express and local orderwire can be configured as on or off on a particular SONET facility. The ONS 15454 supports up to four orderwire

channel terminations per shelf, which allow linear, single ring, dual ring, and small hub-and-spoke configurations. Orderwire is not protected in ring topologies such as bidirectional line switch ring (BLSR) and path protection.

Caution Do not configure orderwire loops. Orderwire loops cause feedback that disables the orderwire channel.

The ONS 15454 implementation of both local and express orderwire is broadcast in nature. The line acts as a party line. There is no signaling for private point-to-point connections. Anyone who picks up the orderwire channel can communicate with all other participants on the connected orderwire subnetwork. The local orderwire party line is separate from the express orderwire party line. Up to four OC-N facilities for each local and express orderwire are provisionable as orderwire paths.

The AIC supports a “call” button on the module front panel which, when pressed, causes all ONS 15454 AICs on the orderwire subnetwork to “ring.” The ringer/buzzer resides on the AIC. There is also a “ring” LED that mimics the AIC ringer. It flashes when any “call” button is pressed on the orderwire subnetwork. The “call” button and ringer LED allow a remote craftsperson to get the attention of craftspeople across the network.

Table 14-10 shows the pins on the orderwire ports that correspond to the tip and ring orderwire assignments.

Table 14-10 Orderwire Pin Assignments

RJ-11 Pin Number	Description
1	Four-wire receive ring
2	Four-wire transmit tip
3	Two-wire ring
4	Two-wire tip
5	Four-wire transmit ring
6	Four-wire receive tip

When provisioning the orderwire subnetwork, make sure that an orderwire loop does not exist. Loops cause oscillation and an unusable orderwire channel. Figure 14-3 shows the standard RJ-11 orderwire pins.

Figure 14-3 RJ-11 Connector

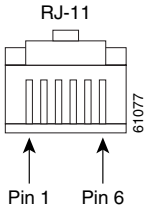

14.2.3 AIC-I Card

The optional Alarm Interface Controller–International (AIC-I) card provides customer-defined (environmental) alarms and controls and supports local and express orderwire. It provides 12 customer-defined input and 4 customer-defined input/output contacts. The physical connections are via the backplane wire-wrap pin terminals. If you use the additional alarm expansion panel (AEP), the AIC-I card can support up to 32 inputs and 16 outputs, which are connected on the AEP connectors. A power monitoring function monitors the supply voltage (–48 VDC). Figure 14-4 shows the AIC-I faceplate and a block diagram of the card.

Note After you have upgraded a shelf to the AIC-I card and set new attributes, you cannot downgrade the shelf back to the AIC card.

Figure 14-4 AIC-I Faceplate and Block Diagram

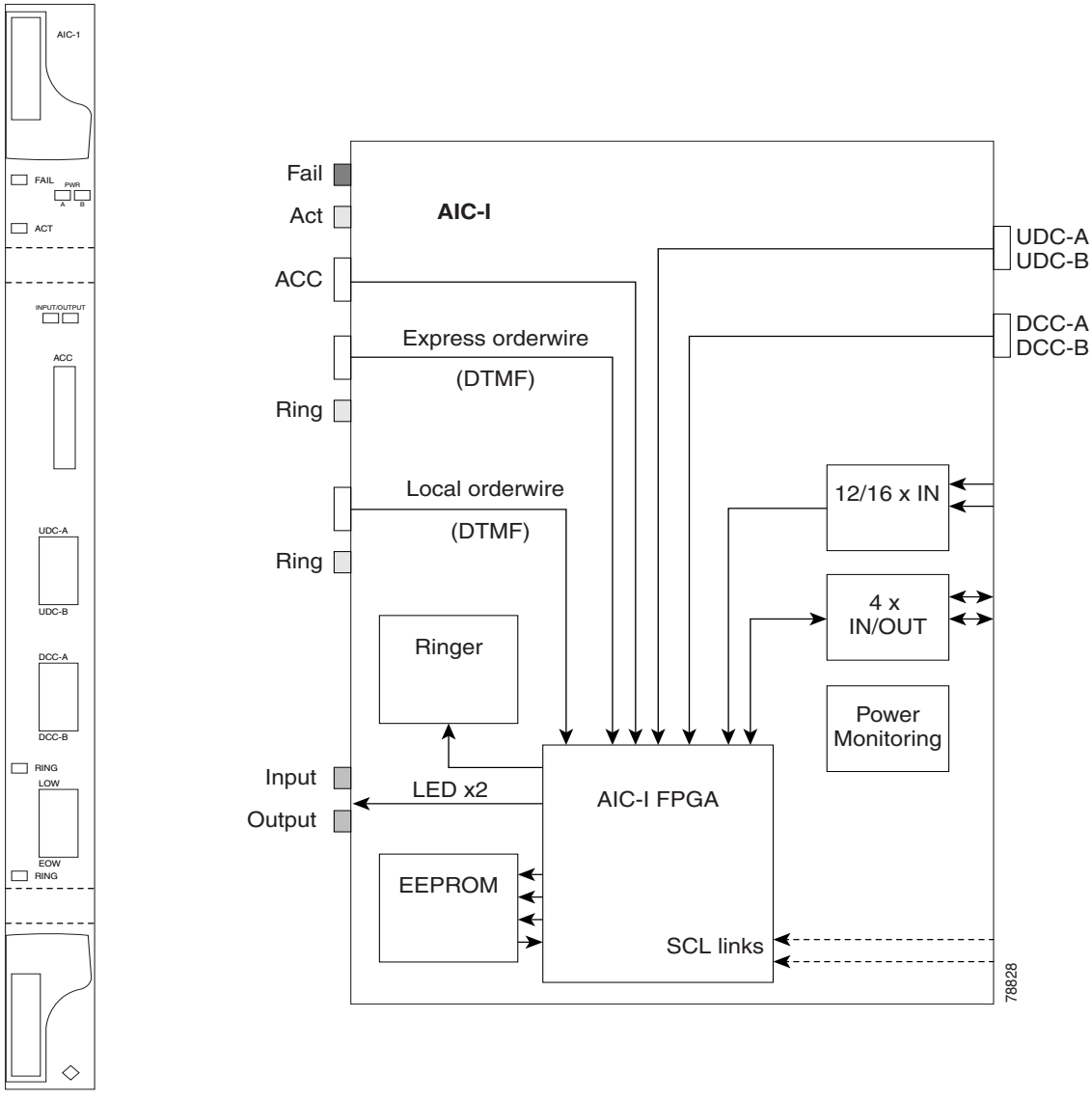

14.2.3.1 AIC-I Card-Level Indicators

Table 14-11 describes the eight card-level LEDs on the AIC-I card faceplate.

Table 14-11 AIC-I Card-Level Indicators

Card-Level LEDs	Description
Red FAIL LED	Indicates that the card's processor is not ready. The FAIL LED is on during Reset and flashes during the boot process. Replace the card if the red FAIL LED persists.
Green ACT LED	Indicates the AIC-I card is provisioned for operation.
Green/red PWR A LED	The PWR A LED is green when a supply voltage within a specified range has been sensed on supply input A. It is red when the input voltage on supply input A is out of range.
Green/red PWR B LED	The PWR B LED is green when a supply voltage within a specified range has been sensed on supply input B. It is red when the input voltage on supply input B is out of range.
Yellow INPUT LED	The INPUT LED is yellow when there is an alarm condition on at least one of the alarm inputs.
Yellow OUTPUT LED	The OUTPUT LED is yellow when there is an alarm condition on at least one of the alarm outputs.
Green RING LED	The RING LED on the local orderwire (LOW) side is flashing green when a call is received on the LOW.
Green RING LED	The RING LED on the express orderwire (EOW) side is flashing green when a call is received on the EOW.

14.2.3.2 External Alarms and Controls

The AIC-I card provides input/output alarm contact closures. You can define up to 12 external alarm inputs and 4 external alarm inputs/outputs (user configurable). The physical connections are made using the backplane wire-wrap pins or FMEC connections. See the "13.9 ONS 15454 ANSI Alarm Expansion Panel" section on page 13-30 for information about increasing the number of input/output contacts.

LEDs on the front panel of the AIC-I indicate the status of the alarm lines, one LED representing all of the inputs and one LED representing all of the outputs. External alarms (input contacts) are typically used for external sensors such as open doors, temperature sensors, flood sensors, and other environmental conditions. External controls (output contacts) are typically used to drive visual or audible devices such as bells and lights, but they can control other devices such as generators, heaters, and fans.

You can program each of the twelve input alarm contacts separately. You can program each of the sixteen input alarm contacts separately. Choices include:

- Alarm on Closure or Alarm on Open
- Alarm severity of any level (Critical, Major, Minor, Not Alarmed, Not Reported)
- Service Affecting or Non-Service Affecting alarm-service level
- 63-character alarm description for CTC display in the alarm log. You cannot assign the fan-tray abbreviation for the alarm; the abbreviation reflects the generic name of the input contacts. The alarm condition remains raised until the external input stops driving the contact or you unprovision the alarm input.

You cannot assign the fan-tray abbreviation for the alarm; the abbreviation reflects the generic name of the input contacts. The alarm condition remains raised until the external input stops driving the contact or you provision the alarm input.

The output contacts can be provisioned to close on a trigger or to close manually. The trigger can be a local alarm severity threshold, a remote alarm severity, or a virtual wire:

- Local NE alarm severity: A hierarchy of Not Reported, Not Alarmed, Minor, Major, or Critical alarm severities that you set to cause output closure. For example, if the trigger is set to Minor, a Minor alarm or above is the trigger.
- Remote NE alarm severity: Same as the local NE alarm severity but applies to remote alarms only.
- Virtual wire entities: You can provision any environmental alarm input to raise a signal on any virtual wire on external outputs 1 through 4 when the alarm input is an event. You can provision a signal on any virtual wire as a trigger for an external control output.

You can also program the output alarm contacts (external controls) separately. In addition to provisionable triggers, you can manually force each external output contact to open or close. Manual operation takes precedence over any provisioned triggers that might be present.

Note The number of inputs and outputs can be increased using the AEP. The AEP is connected to the shelf backplane and requires an external wire-wrap panel.

14.2.3.3 Orderwire

Orderwire allows a craftsperson to plug a phoneset into an ONS 15454 and communicate with craftspeople working at other ONS 15454s or other facility equipment. The orderwire is a pulse code modulation (PCM) encoded voice channel that uses E1 or E2 bytes in section/line overhead.

The AIC-I allows simultaneous use of both local (section overhead signal) and express (line overhead channel) orderwire channels on a SONET ring or particular optics facility. Express orderwire also allows communication via regeneration sites when the regenerator is not a Cisco device.

You can provision orderwire functions with CTC similar to the current provisioning model for DCC/GCC channels. In CTC, you provision the orderwire communications network during ring turn-up so that all NEs on the ring can reach one another. Orderwire terminations (that is, the optics facilities that receive and process the orderwire channels) are provisionable. Both express and local orderwire can be configured as on or off on a particular SONET facility. The ONS 15454 supports up to four orderwire channel terminations per shelf. This allows linear, single ring, dual ring, and small hub-and-spoke configurations. Keep in mind that orderwire is not protected in ring topologies such as BLSR and Path Protection.

Caution Do not configure orderwire loops. Orderwire loops cause feedback that disables the orderwire channel.

The ONS 15454 implementation of both local and express orderwire is broadcast in nature. The line acts as a party line. Anyone who picks up the orderwire channel can communicate with all other participants on the connected orderwire subnetwork. The local orderwire party line is separate from the express orderwire party line. Up to four OC-N facilities for each local and express orderwire are provisionable as orderwire paths.

Note The OC3 IR 4/STM1 SH 1310 card does not support the express orderwire channel.

The AIC-I supports selective dual tone multifrequency (DTMF) dialing for telephony connectivity, which causes one AIC-I card or all ONS 15454 AIC-I cards on the orderwire subnetwork to "ring." The ringer/buzzer resides on the AIC-I. There is also a "ring" LED that mimics the AIC-I ringer. It flashes when a call is received on the orderwire subnetwork. A party line call is initiated by pressing ***0000** on the DTMF pad. Individual dialing is initiated by pressing * and the individual four-digit number on the DTMF pad.

Table 14-12 shows the pins on the orderwire connector that correspond to the tip and ring orderwire assignments.

Table 14-12 Orderwire Pin Assignments

RJ-11 Pin Number	Description
1	Four-wire receive ring
2	Four-wire transmit tip
3	Two-wire ring
4	Two-wire tip
5	Four-wire transmit ring
6	Four-wire receive tip

When provisioning the orderwire subnetwork, make sure that an orderwire loop does not exist. Loops cause oscillation and an unusable orderwire channel.

Figure 14-5 shows the standard RJ-11 connectors used for orderwire ports.

Figure 14-5 RJ-11 Connector

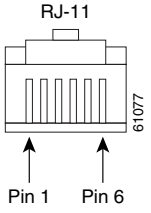

14.2.3.4 Power Monitoring

The AIC-I card provides a power monitoring circuit that monitors the supply voltage of –48 VDC for presence, undervoltage, or overvoltage.

14.2.3.5 User Data Channel

The user data channel (UDC) features a dedicated data channel of 64 kbps (F1 byte) between two nodes in an ONS 15454 network. Each AIC-I card provides two user data channels, UDC-A and UDC-B, through separate RJ-11 connectors on the front of the AIC-I card. Each UDC can be routed to an individual optical interface in the ONS 15454. For instructions, refer to the *Cisco ONS 15454 Procedure Guide*.

The UDC ports are standard RJ-11 receptacles. Table 14-13 lists the UDC pin assignments.

Table 14-13 UDC Pin Assignments

RJ-11 Pin Number	Description
1	For future use
2	TXN
3	RXN
4	RXP
5	TXP
6	For future use

14.2.3.6 Data Communications Channel

The DCC features a dedicated data channel of 576 kbps (D4 to D12 bytes) between two nodes in an ONS 15454 network. Each AIC-I card provides two data communications channels, DCC-A and DCC-B, through separate RJ-45 connectors on the front of the AIC-I card. Each DCC can be routed to an individual optical interface in the ONS 15454. For instructions, see the "DLP-G110 Create a User Data Channel Circuit" task on page 6-16.

The DCC ports are standard RJ-45 receptacles. Table 14-14 lists the DCC pin assignments.

Table 14-14 DCC Pin Assignments

RJ-45 Pin Number	Description
1	TCLKP
2	TCLKN
3	TXP
4	TXN
5	RCLKP
6	RCLKN
7	RXP
8	RXN

14.3 Front Mount Electrical Connections

This section describes the front mount electrical connections (FMECs), MIC-A/P and MIC-C/T/P, that provide power, external alarm, and timing connections for the ONS 15454 ETSI shelf.

14.3.1 MIC-A/P FMEC

The MIC-A/P FMEC provides connection for the BATTERY B input, one of the two possible redundant power supply inputs. It also provides connection for eight alarm outputs (coming from the TCC2 card), sixteen alarm inputs, and four configurable alarm inputs/outputs. Its position is in Slot 23 in the center of the subrack Electrical Facility Connection Assembly (EFCA) area. Figure 14-6 shows the MIC-A/P faceplate and block diagram.

Figure 14-6 MIC-A/P Faceplate and Block Diagram

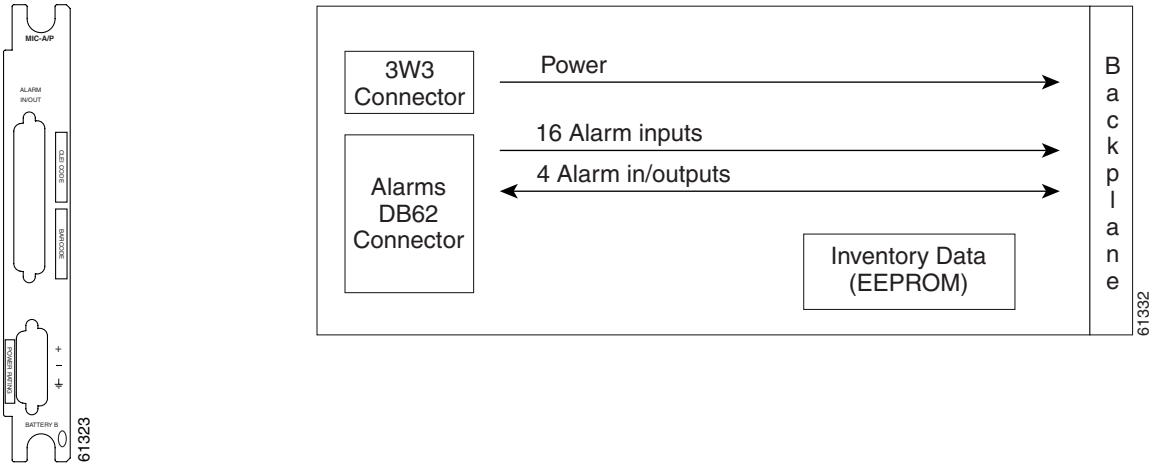

The MIC-A/P FMEC has the following features:

- Connection for one of the two possible redundant power supply inputs
- Connection for eight alarm outputs (coming from the TCC2 card)
- Connection for four configurable alarm inputs/outputs
- Connection for sixteen alarm inputs
- Storage of manufacturing and inventory data

Note For proper system operation, both the MIC-A/P and MIC-C/T/P FMECs must be installed in the ONS 15454 ETSI shelf.

14.3.1.1 MIC-A/P Connector Pinouts

Table 14-15 shows the alarm interface pinouts on the MIC-A/P DB-62 connector.

Table 14-15 Alarm Interface Pinouts on the MIC-A/P DB-62 Connector

Pin No.	Signal Name	Signal Description
1	ALMCUTOFF N	Alarm cutoff, normally open ACO pair
2	ALMCUTOFF P	Alarm cutoff, normally open ACO pair
3	ALMINP0 N	Alarm input pair 1, reports closure on connected wires
4	ALMINP0 P	Alarm input pair 1, reports closure on connected wires
5	ALMINP1 N	Alarm input pair 2, reports closure on connected wires
6	ALMINP1 P	Alarm input pair 2, reports closure on connected wires
7	ALMINP2 N	Alarm input pair 3, reports closure on connected wires
8	ALMINP2 P	Alarm input pair 3, reports closure on connected wires
9	ALMINP3 N	Alarm input pair 4, reports closure on connected wires
10	ALMINP3 P	Alarm input pair 4, reports closure on connected wires

Table 14-15 Alarm Interface Pinouts on the MIC-A/P DB-62 Connector (continued)

Pin No.	Signal Name	Signal Description
11	EXALM0 N	External customer alarm 1
12	EXALM0 P	External customer alarm 1
13	GND	Ground
14	EXALM1 N	External customer alarm 2
15	EXALM1 P	External customer alarm 2
16	EXALM2 N	External customer alarm 3
17	EXALM2 P	External customer alarm 3
18	EXALM3 N	External customer alarm 4
19	EXALM3 P	External customer alarm 4
20	EXALM4 N	External customer alarm 5
21	EXALM4 P	External customer alarm 5
22	EXALM5 N	External customer alarm 6
23	EXALM5 P	External customer alarm 6
24	EXALM6 N	External customer alarm 7
25	EXALM6 P	External customer alarm 7
26	GND	Ground
27	EXALM7 N	External customer alarm 8
28	EXALM7 P	External customer alarm 8
29	EXALM8 N	External customer alarm 9
30	EXALM8 P	External customer alarm 9
31	EXALM9 N	External customer alarm 10
32	EXALM9 P	External customer alarm 10
33	EXALM10 N	External customer alarm 11
34	EXALM10 P	External customer alarm 11
35	EXALM11 N	External customer alarm 12
36	EXALM11 P	External customer alarm 12
37	ALMOUP0 N	Normally open output pair 1
38	ALMOUP0 P	Normally open output pair 1
39	GND	Ground
40	ALMOUP1 N	Normally open output pair 2
41	ALMOUP1 P	Normally open output pair 2
42	ALMOUP2 N	Normally open output pair 3
43	ALMOUP2 P	Normally open output pair 3
44	ALMOUP3 N	Normally open output pair 4
45	ALMOUP3 P	Normally open output pair 4
46	AUDALM0 N	Normally open Minor audible alarm

Table 14-15 Alarm Interface Pinouts on the MIC-A/P DB-62 Connector (continued)

Pin No.	Signal Name	Signal Description
47	AUDALM0 P	Normally open Minor audible alarm
48	AUDALM1 N	Normally open Major audible alarm
49	AUDALM1 P	Normally open Major audible alarm
50	AUDALM2 N	Normally open Critical audible alarm
51	AUDALM2 P	Normally open Critical audible alarm
52	GND	Ground
53	AUDALM3 N	Normally open Remote audible alarm
54	AUDALM3 P	Normally open Remote audible alarm
55	VISALM0 N	Normally open Minor visual alarm
56	VISALM0 P	Normally open Minor visual alarm
57	VISALM1 N	Normally open Major visual alarm
58	VISALM1 P	Normally open Major visual alarm
59	VISALM2 N	Normally open Critical visual alarm
60	VISALM2 P	Normally open Critical visual alarm
61	VISALM3 N	Normally open Remote visual alarm
62	VISALM3 P	Normally open Remote visual alarm

14.3.2 MIC-C/T/P FMEC

The MIC-C/T/P FMEC provides connection for the BATTERY A input, one of the two possible redundant power supply inputs. It also provides connection for system management serial port, system management LAN port, modem port (for future use), and system timing inputs and outputs. Install the MIC-C/T/P in Slot 24. Figure 14-7 shows the MIC-C/T/P FMEC faceplate and block diagram.

Figure 14-7 MIC-C/T/P Faceplate and Block Diagram

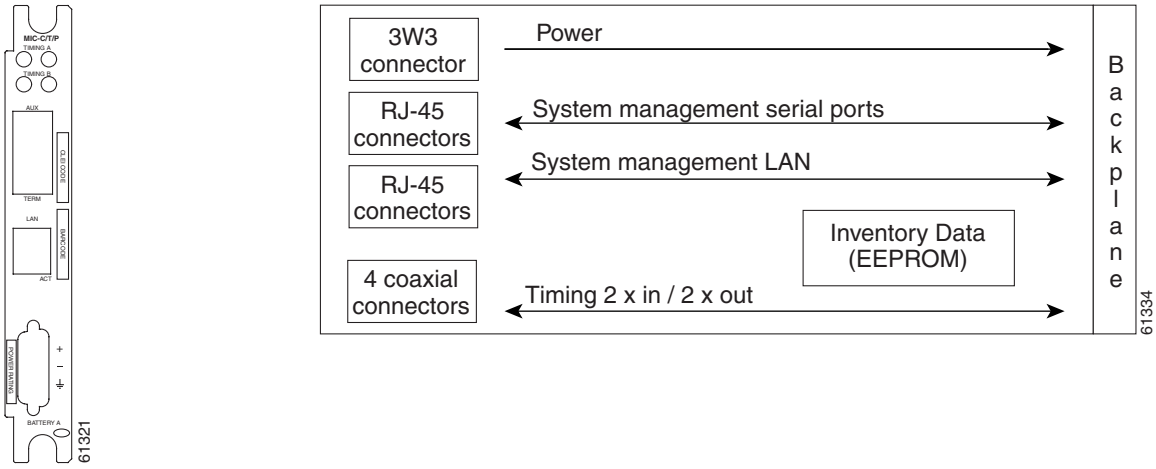

The MIC-C/T/P FMEC has the following features:

- Connection for one of the two possible redundant power supply inputs
- Connection for two serial ports for local craft/modem (for future use)
- Connection for one LAN port
- Connection for two system timing inputs
- Connection for two system timing outputs
- Storage of manufacturing and inventory data

Note For proper system operation, both the MIC-A/P and MIC-C/T/P FMECs must be installed in the shelf.

14.3.2.1 MIC-C/T/P Port-Level Indicators

The MIC-C/T/P FMEC has one pair of LEDs located on the RJ45 LAN connector. The green LED is on when a link is present, and the amber LED is on when data is being transferred.

14.4 Optical Service Channel Cards

This section describes the optical service channel cards. An optical service channel (OSC) is a bidirectional channel connecting two adjacent nodes in a DWDM ring. For every DWDM node (except terminal nodes), two different OSC terminations are present, one for the West side and another for the East side. The channel transports OSC overhead that is used to manage ONS 15454 DWDM networks. An OSC signal uses the 1510-nm wavelength and does not affect client traffic. The primary purpose of this channel is to carry clock synchronization and orderwire channel communications for the DWDM network. It also provides transparent links between each node in the network. The OSC is an OC-3 formatted signal.

There are two versions of the OSC modules: the OSCM, and the OSC-CSM, which contains the OSC wavelength combiner and separator component in addition to the OSC module.

14.4.1 OSCM Card

This section describes the OSCM card.

14.4.1.1 Faceplate

Figure 14-8 shows the OSCM faceplate.

Figure 14-8 OSCM Faceplate

14.4.1.2 Block Diagram

Figure 14-9 shows the OSCM block diagram.

Figure 14-9 OSCM Block Diagram

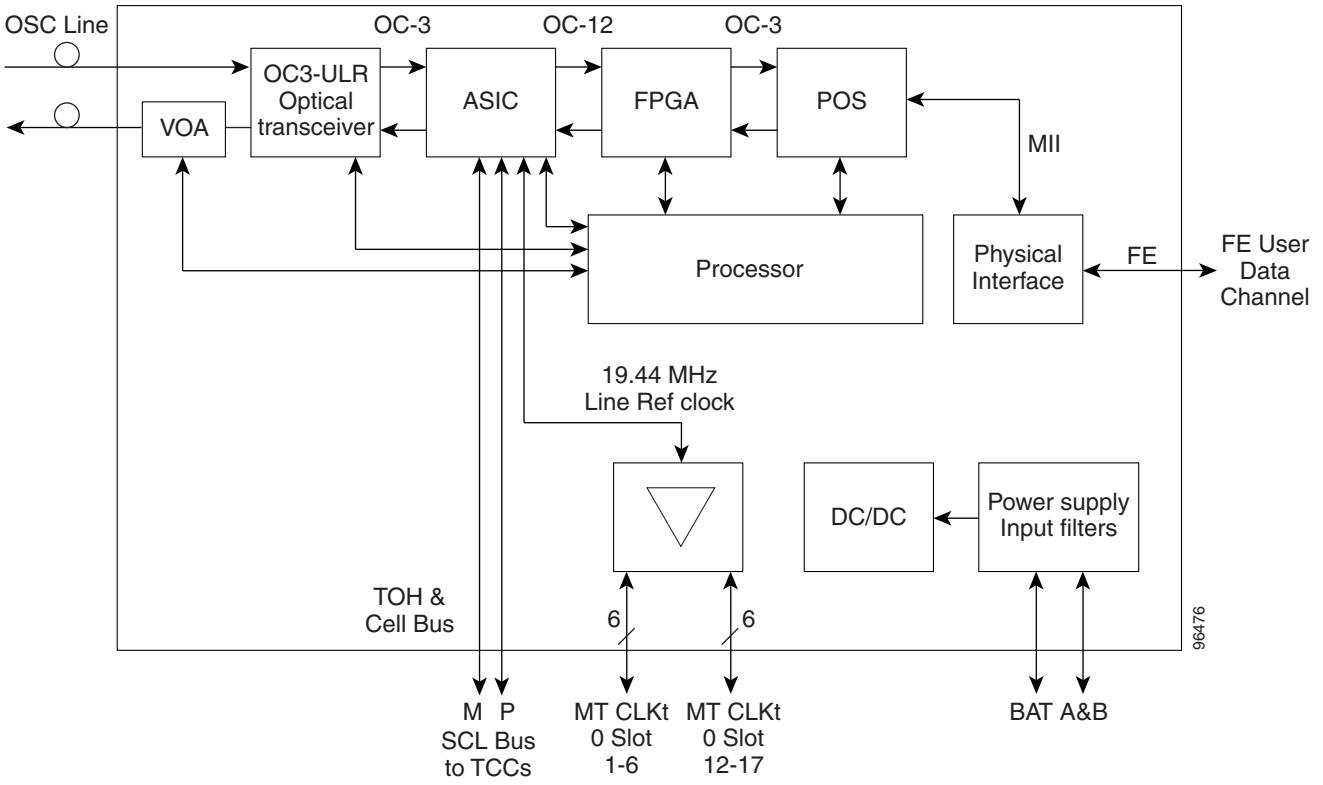

The OSCM is used in amplified nodes that include the OPT-BST booster amplifier. The OPT-BST includes the required OSC wavelength combiner and separator component. The OSCM cannot be used in nodes where you use OC-N cards, electrical cards, or cross-connect cards. The OSCM uses Slots 8 and 10, which are also cross-connect card slots.

The OSCM supports the following features:

- OC-3 formatted OSC
- Supervisory data channel (SDC) forwarded to the TCC2 cards for processing
- Distribution of the synchronous clock to all nodes in the ring
- 100BaseT far-end (FE) user data channel (UDC)
- Monitoring functions such as orderwire support and optical safety

The OC-3 section data communications channel (SDCC) overhead bytes are used for network communications. An optical transceiver terminates the OC-3, then it is regenerated and converted into an electrical signal. The SDCC bytes are forwarded to the active and standby TCC2 cards for processing via the system communication link (SCL) bus on the backplane. Orderwire bytes (E1, E2, F1) are also forwarded via the SCL bus to the TCC2 for forwarding to the AIC-I card.

The payload portion of the OC-3 is used to carry the fast Ethernet UDC. The frame is sent to a packet-over-SONET (POS) processing block that extracts the Ethernet packets and makes them available at the RJ-45 connector.

The OSCM, which resides in the cross-connect slots and follows the ONS 15454 backplane architecture, distributes the reference clock information by removing it from the incoming OC-3 signal and then sending it to the DWDM cards. The DWDM cards then forward the clock information to the active and standby TCC2 cards.

Figure 14-10 shows the block diagram of the VOA within the OSCM.

Figure 14-10 OSCM VOA Optical Module Functional Block Diagram

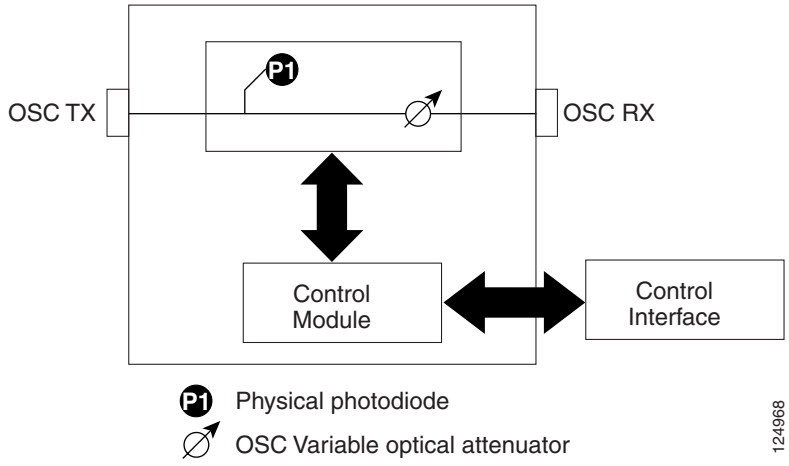

14.4.1.3 Power Monitoring

Physical photodiode P1 monitors the power for the OSCM card. The returned power level value is calibrated to the OSC TX port. See Table 14-16.

Table 14-16 OSCM VOA Port Calibration

Photodiode	CTC "Type" Name	Calibrated to Port
P1	Output OSC	OSC TX

14.4.1.4 OSCM Card-Level Indicators

The OSCM card has three card-level LED indicators, described in Table 14-17.

Table 14-17 OSCM Card-Level Indicators

Card-Level Indicators	Description
Red FAIL LED	The red FAIL LED indicates that the card's processor is not ready or that there is an internal hardware failure. Replace the card if the red FAIL LED persists.
Green ACT LED	The green ACT LED indicates that the OSCM is carrying traffic or is traffic-ready.
Amber SF LED	The amber SF LED indicates a signal failure or condition such as loss of signal (LOS), loss of frame alignment (LOF), line alarm indication signal (AIS-L), or high BER on one or more of the card's ports. The amber signal fail (SF) LED also illuminates when the transmit and receive fibers are incorrectly connected. When the fibers are properly connected, the light turns off.

14.4.1.5 OSCM Port-Level Indicators

You can find the status of the card ports using the LCD screen on the ONS 15454 fan-tray assembly. Use the LCD to view the status of any port or card slot; the screen displays the number and severity of alarms for a given port or slot. The OSCM has one OC-3 optical port located on the faceplate. One long-reach OSC transmits and receives the OSC to and from another DWDM node. Both data communications network (DCN) data and FE payload are carried on this link.

14.4.2 OSC-CSM Card

This section describes the OSC-CSM card.

14.4.2.1 Faceplate

Figure 14-11 shows the OSC-CSM faceplate.

Figure 14-11 OSC-CSM Faceplate

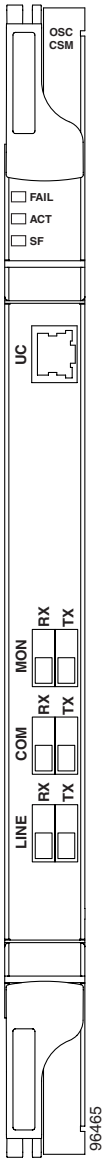

14.4.2.2 Block Diagram

Figure 14-12 shows the OSC-CSM block diagram.

Figure 14-12 OSC-CSM Block Diagram

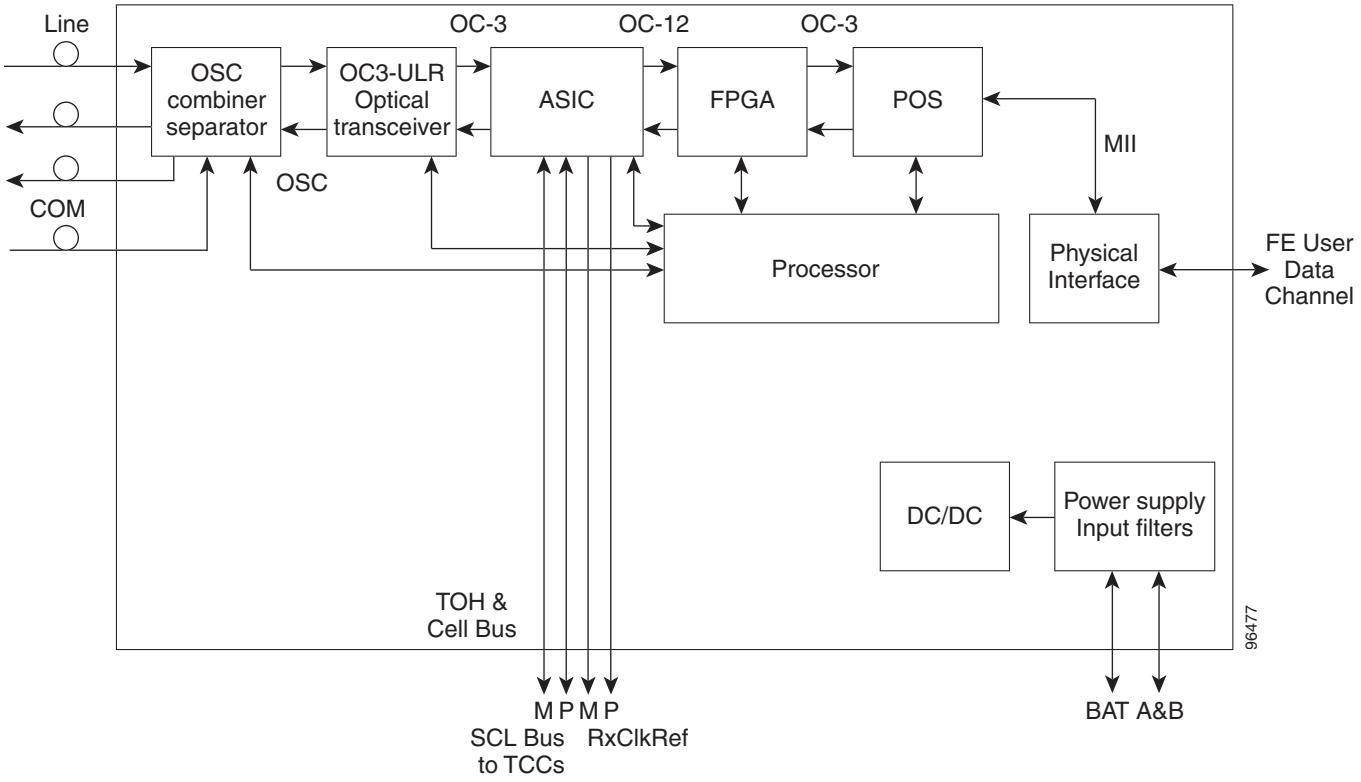

Figure 14-13 shows the OSC-CSM optical module functional block diagram.

Figure 14-13 OSC-CSM Optical Module Functional Block Diagram

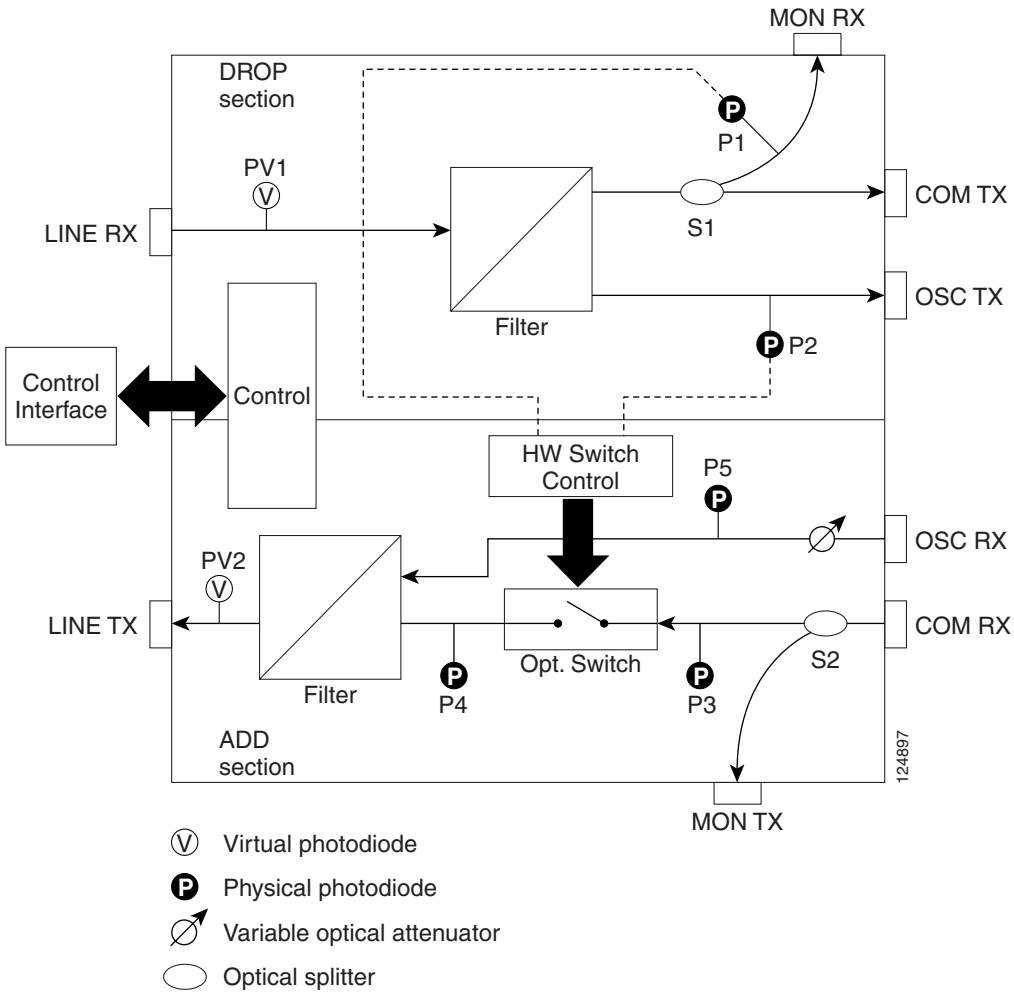

The OSC-CSM is used in unamplified nodes. This means that the booster amplifier with the OSC wavelength combiner and separator is not required for OSC-CSM operation. The OSC-CSM can be installed in Slots 1 to 6 and 12 to 17. The cross-connect cards enable functionality on the OC-N cards and electrical cards.

The OSC-CSM supports the following features:

- Optical combiner and separator module for multiplexing and demultiplexing the optical service channel to or from the wavelength division multiplexing (WDM) signal
- OC-3 formatted OSC
- SDC forwarded to the TCC2 cards for processing
- Distribution of the synchronous clock to all nodes in the ring
- 100BaseT FE UDC
- Monitoring functions such as orderwire support
- Optical safety: Signal loss detection and alarming, fast transmitted power shut down by means of an optical 1x1 switch
- Optical safety remote interlock (OSRI), a feature capable of shutting down the optical output power

- Automatic laser shutdown (ALS), a safety mechanism used in the event of a fiber cut

The wave division multiplexing (WDM) signal coming from the line is passed through the OSC combiner and separator, where the OSC signal is extracted from the WDM signal. The WDM signal is sent along with the remaining channels to the COM port (label on the front panel) for routing to the OADM or amplifier units, while the OSC signal is sent to an optical transceiver.

The OSC is an OC-3 formatted signal. The OC-3 SDCC overhead bytes are used for network communications. An optical transceiver terminates the OC-3, and then it is regenerated and converted into an electrical signal. The SDCC bytes are forwarded to the active and standby TCC2 cards for processing via the SCL bus on the backplane. Orderwire bytes (E1, E2, F1) are also forwarded via the SCL bus to the TCC2 for forwarding to the AIC-I card.

The payload portion of the OC-3 is used to carry the fast Ethernet UDC. The frame is sent to a POS processing block that extracts the Ethernet packets and makes them available at the RJ-45 front panel connector.

The OSC-CSM distributes the reference clock information by removing it from the incoming OC-3 signal and then sending it to the active and standby TCC2s. The clock distribution is different form the OSCM card because the OSC-CSM does not use Slot 8 or 10 (cross-connect card slots).

Note S1 and S2 (see Figure 14-13) are optical splitters with a splitter ratio of 2:98. The result is that the power at the MON TX port is about 17 dB lower than the relevant power at the COM RX port, and the power at the MON RX port is about 20 dB lower than the power at the COM TX port. The difference is due to the presence of a tap coupler for the P1 photodiode.

14.4.2.3 Power Monitoring

Physical photodiodes P1, P2, P3, and P5 monitor the power for the OSC-CSM card. Their function is as follows:

- P1 and P2: The returned power value is calibrated to the LINE RX port, including the insertion loss of the previous filter (the reading of this power dynamic range has been brought backward towards the LINE RX output).
- P3: The returned value is calibrated to the COM RX port.
- P5: The returned value is calibrated to the LINE TX port, including the insertion loss of the subsequent filter.

The returned power level values are calibrated to the ports as shown in Table 14-18.

Table 14-18 OSC-CSM Port Calibration

Photodiode	CTC "Type" Name	Calibrated to Port
P1	Out Com	LINE RX
P2	Input OSC	LINE RX
P3	In Com	COM RX
P5	Output Osc	LINE TX

14.4.2.4 OSC-CSM Card-Level Indicators

The OSC-CSM card has three card-level LED indicators, described in Table 14-19.

Table 14-19 OSC-CSM Card-Level Indicators

Card-Level Indicators	Description
Red FAIL LED	The red FAIL LED indicates that the card's processor is not ready or that there is an internal hardware failure. Replace the card if the red FAIL LED persists.
Green ACT LED	The green ACT LED indicates that the OSC-CSM is carrying traffic or is traffic-ready.
Amber SF LED	The amber SF LED indicates a signal failure or condition such as LOS, LOF, AIS-L, or high BER on one or more of the card's ports. The amber SF LED also illuminates when the transmit and receive fibers are incorrectly connected. When the fibers are properly connected, the light turns off.

14.4.2.5 OSC-CSM Port-Level Indicators

You can find the status of the card ports using the LCD screen on the ONS 15454 fan-tray assembly. Use the LCD to view the status of any port or card slot; the screen displays the number and severity of alarms for a given port or slot. The OSC-CSM has a OC3 port and three other sets of ports located on the faceplate.

14.5 Optical Amplifier Cards

This section describes the optical amplifier cards. Optical amplifiers are used in amplified nodes, such as hub nodes, amplified OADM nodes, and line amplifier nodes. There are two forms of amplifiers, the Optical Preamplifier (OPT-PRE) and the Optical Booster (OPT-BST) amplifier. The optical amplifier card architecture includes an optical plug-in module with a controller that manages optical power, laser current, and temperature control loops. The amplifier also manages communication with the TCC2, and operations, administration, maintenance, and provisioning (OAM&P) functions such as provisioning, controls, and alarms.

Optical amplifiers have a linear power feature that enables them to be kept in the constant gain mode if the gain is less than 28 dB. However, for longer span solutions it is necessary to place the amplifier in constant power mode. In constant power mode, automatic power control (APC) requirements change. This is because span loss degradation does not affect the system and amplifiers are not able to automatically modify the output power for variations in the number of channels when provisioning changes and a failure occurs.

14.5.1 OPT-PRE Amplifier

This section describes the OPT-PRE Amplifier card.

14.5.1.1 Faceplate

Figure 14-14 shows the OPT-PRE amplifier faceplate.

Figure 14-14 OPT-PRE Faceplate

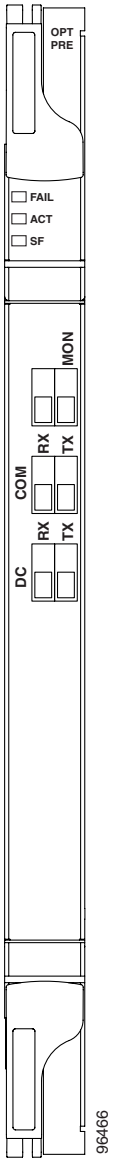

14.5.1.2 Block Diagrams

Figure 14-15 shows the OPT-PRE block diagram.

Figure 14-15 OPT-PRE Block Diagram

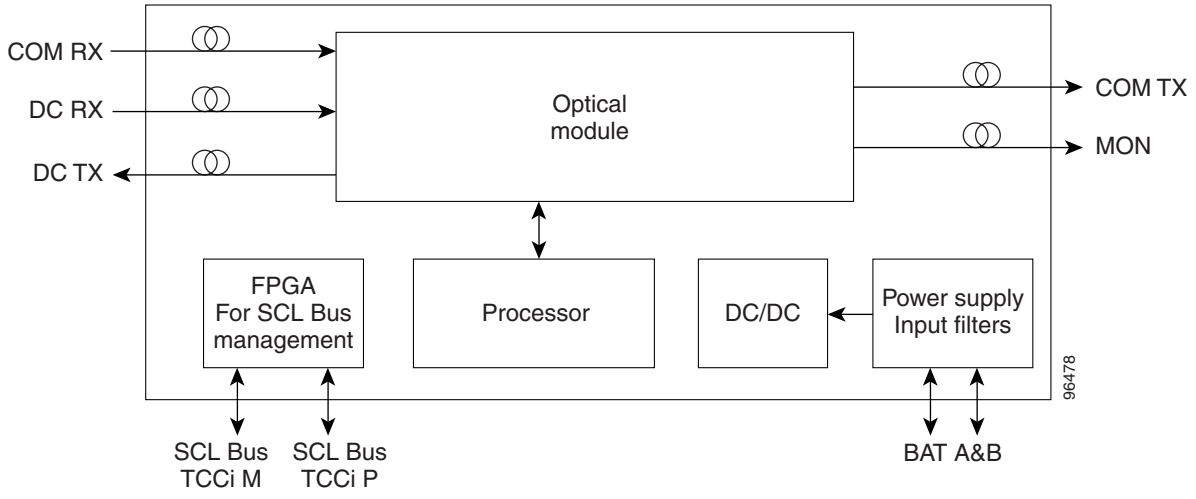

Figure 14-16 shows the OPT-PRE optical module functional block diagram.

Figure 14-16 OPT-PRE Optical Module Functional Block Diagram

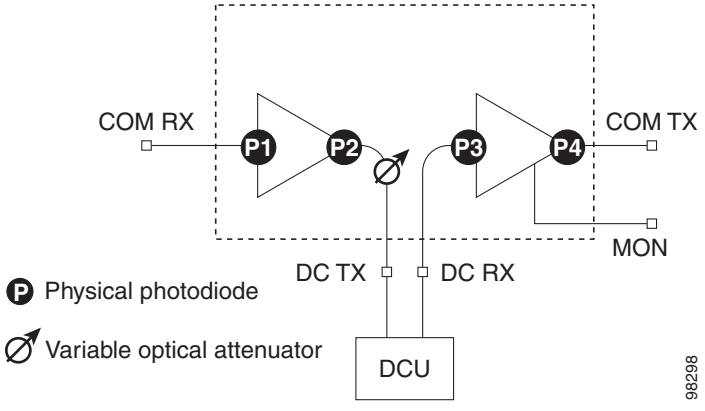

The OPT-PRE is designed to support 64 channels at 50-GHz channel spacing, but currently limited to 32 channels at 100 GHz. The OPT-PRE is a C-band DWDM, two-stage erbium-doped fiber amplifier (EDFA) with mid-amplifier loss (MAL) for allocation to a dispersion compensation unit (DCU). To control the gain tilt, the OPT-PRE is equipped with a built-in VOA. The VOA can also be used to pad the DCU to a reference value. You can install the OPT-PRE in Slots 1 to 6 and 12 to 17.

The OPT-PRE features:

- Fixed gain mode with programmable tilt
- True variable gain
- Fast transient suppression
- Nondistorting low-frequency transfer function
- Settable maximum output power
- Fixed output power mode (mode used during provisioning)
- MAL for fiber-based DCU

- Amplified spontaneous emissions (ASE) compensation in fixed gain mode
- Full monitoring and alarm handling with settable thresholds
- Optical safety features that include signal loss detection and alarming, fast power down control and reduced maximum output power in safe power mode
- Four signal photodiodes to monitor the input and output optical power of the two amplifier stages through CTC
- An optical output port for external monitoring

Note The optical splitter has a ratio of 1:99. The result is that the power at the MON port is about 20 dB lower than the power at the COM TX port.

14.5.1.3 Power Monitoring

Physical photodiodes P1, P2, P3, and P4 monitor the power for the OPT-PRE card. The returned power level values are calibrated to the ports as shown in Table 14-20.

Table 14-20 OPT-PRE Port Calibration

Photodiode	CTC "Type" Name	Calibrated to Port
P1	Input Com	COM RX
P2	Output DC	DC TX
P3	Input DC	DC RX
P4	Output COM (Total Output)	COM TX
	Output COM (Signal Output)	

14.5.1.4 OPT-PRE Amplifier Card-Level Indicators

The OPT-PRE amplifier has three card-level LED indicators, described in Table 14-21.

Table 14-21 OPT-PRE Amplifier Card-Level Indicators

Card-Level Indicators	Description
Red FAIL LED	The red FAIL LED indicates that the card's processor is not ready or that there is an internal hardware failure. Replace the card if the red FAIL LED persists.
Green ACT LED	The green ACT LED indicates that the OPT-PRE is carrying traffic or is traffic-ready.
Amber SF LED	The amber SF LED indicates a signal failure or condition such as LOS on one or more of the card's ports. The amber SF LED also illuminates when the transmit and receive fibers are incorrectly connected. When the fibers are properly connected, the light turns off.

14.5.1.5 OPT-PRE Port-Level Indicators

You can find the status of the card ports using the LCD screen on the ONS 15454 fan-tray assembly. Use the LCD to view the status of any port or card slot; the screen displays the number and severity of alarms for a given port or slot. The OPT-PRE amplifier has five optical ports located on the faceplate. MON is the output monitor port. COM Rx (receive) is the input signal port. COM Tx (transmit) is the output signal port. DC Rx is the MAL input signal port. DC Tx is the MAL output signal port.

14.5.2 OPT-BST Amplifier Card

This section describes the OPT_BST Amplifier card. The OPT-BST gain range is 5 to 20 dB in constant gain mode and output power mode.

14.5.2.1 Faceplate

Figure 14-17 shows the OPT-BST amplifier faceplate.

Figure 14-17 OPT-BST Faceplate

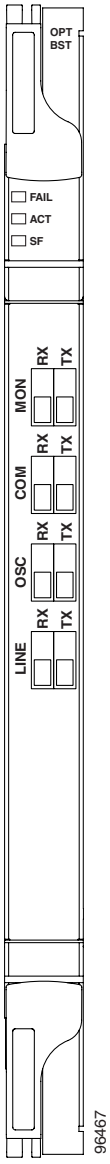

14.5.2.2 Block Diagrams

Figure 14-18 shows the OPT-BST amplifier block diagram.

Figure 14-18 OPT-BST Block Diagram

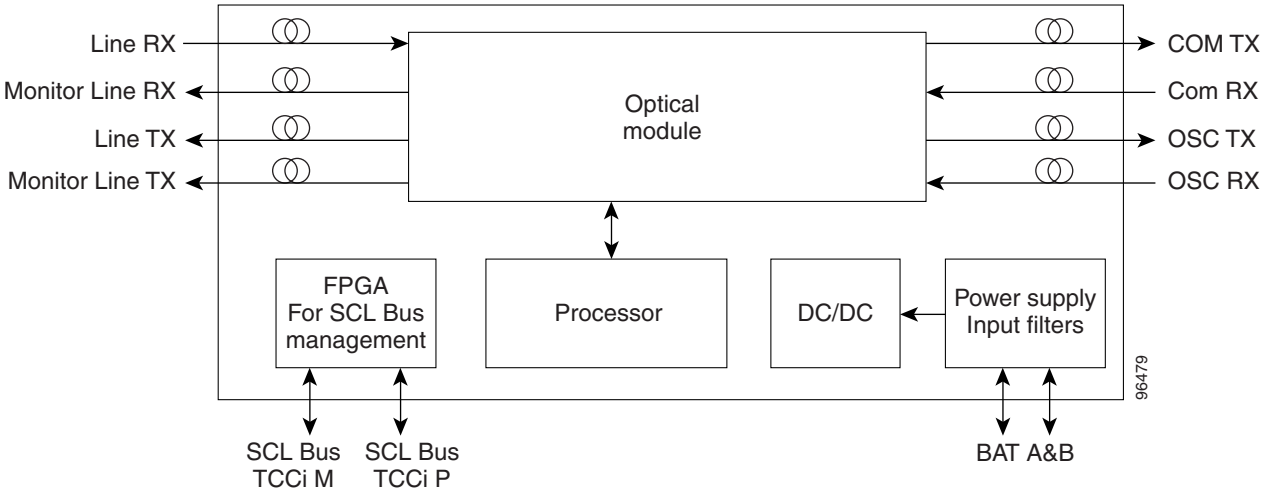

Figure 14-19 shows the OPT-BST optical module functional block diagram.

Figure 14-19 OPT-BST Optical Module Functional Block Diagram

The OPT-BST is designed to support 64 channels at 50-GHz channel spacing, but currently is limited to 32 channels at 100 GHz. The OPT-BST is a C-band DWDM EDFA with OSC add-and-drop capability. When an ONS 15454 has an OPT-BST installed, it is only necessary to have the OSCM to process the OSC. You can install the OPT-BST in Slots 1 to 6 and 12 to 17. To control the gain tilt, the OPT-BST is equipped with a built-in VOA.

The OPT-BST features include:

- Fixed gain mode (with programmable tilt)
- True variable gain

- Fast transient suppression
- Nondistorting low-frequency transfer function
- Settable maximum output power
- Fixed output power mode (mode used during provisioning)
- ASE compensation in fixed gain mode
- Full monitoring and alarm handling with settable thresholds
- Optical safety features, including signal loss detection and alarming, fast power down control, and reduced maximum output power in safe power mode
- OSRI, which is a software feature capable (through CTC) of shutting down the optical output power or reducing the power to a safe level (automatic power reduction)
- ALS, which is a safety mechanism used in the event of a fiber cut

Note The optical splitters each have a ratio of 1:99. The result is that the power at the MON TX and MON RX ports is about 20 dB lower than the power at the COM TX and COM RX ports.

14.5.2.3 Power Monitoring

Physical photodiodes P1, P2, P3, and P4 monitor the power for the OPT-BST card. The returned power level values are calibrated to the ports as shown in Table 14-22.

Table 14-22 OPT-BST Port Calibration

Photodiode	CTC "Type" Name	Calibrated to Port
P1	Input Com	COM RX
P2	Output Line (Total Output)	LINE TX
	Output Line (Signal Output)	
P3	Output COM	LINE RX
P4	Output OSC	

14.5.2.4 OPT-BST Amplifier-Level Indicators

The OPT-BST amplifier has three card-level LED indicators, described in Table 14-23.

Table 14-23 OPT-BST Card-Level Indicators

Card-Level Indicators	Description
Red FAIL LED	The red FAIL LED indicates that the card's processor is not ready or that there is an internal hardware failure. Replace the card if the red FAIL LED persists.
Green ACT LED	The green ACT LED indicates that the OPT-BST is carrying traffic or is traffic-ready.
Amber SF LED	The amber SF LED indicates a signal failure or condition such as LOS on one or more of the card's ports. The amber SF LED also illuminates when the transmit and receive fibers are incorrectly connected. When the fibers are properly connected, the light turns off.

14.5.2.5 OPT-BST Port-Level Indicators

You can find the status of the card ports using the LCD screen on the ONS 15454 fan-tray assembly. Use the LCD to view the status of any port or card slot; the screen displays the number and severity of alarms for a given port or slot. The OPT-BST amplifier has eight optical ports located on the faceplate. MON RX is the output monitor port (receive section). MON TX is the output monitor port. COM RX is the input signal port. LINE TX is the output signal port. LINE RX is the input signal port (receive section). COM TX is the output signal port (receive section). OSC RX is the OSC add input port. OSC TX is the OSC drop output port.

14.6 Multiplexer and Demultiplexer Cards

This section describes the multiplexer and demultiplexer cards.

14.6.1 32MUX-O Card

The 32-Channel Multiplexer (32MUX-O) card multiplexes 32 100-GHz-spaced channels identified in the channel plan. The 32MUX-O card takes up two slots in an ONS 15454 and can be installed in Slots 1 to 5 and 12 to 16.

The 32MUX-O is typically used in hub nodes and provides the multiplexing of 32 channels, spaced at 100 GHz, into one fiber before their amplification and transmission along the line. The channel plan is shown in Table 14-24.

Table 14-24 32MUX_O Channel Plan

Channel Number[1]	Channel ID	Frequency (GHz)	Wavelength (nm)
1	30.3	195.9	1530.33
2	31.2	195.8	1531.12
3	31.9	195.7	1531.90
4	32.6	195.6	1532.68
5	34.2	195.4	1534.25
6	35.0	195.3	1535.04
7	35.8	195.2	1535.82
8	36.6	195.1	1536.61
9	38.1	194.9	1538.19
10	38.9	194.8	1538.98
11	39.7	194.7	1539.77
12	40.5	194.6	1540.56
13	42.1	194.4	1542.14
14	42.9	194.3	1542.94
15	43.7	194.2	1543.73
16	44.5	194.1	1544.53
17	46.1	193.9	1546.12
18	46.9	193.8	1546.92
19	47.7	193.7	1547.72
20	48.5	193.6	1548.51
21	50.1	193.4	1550.12
22	50.9	193.3	1550.92
23	51.7	193.2	1551.72
24	52.5	193.1	1552.52
25	54.1	192.9	1554.13

Table 14-24 32MUX_O Channel Plan

Channel Number[1]	Channel ID	Frequency (GHz)	Wavelength (nm)
26	54.9	192.8	1554.94
27	55.7	192.7	1555.75
28	56.5	192.6	1556.55
29	58.1	192.4	1558.17
30	58.9	192.3	1558.98
31	59.7	192.2	1559.79
32	60.6	192.1	1560.61

1. Channel # is only for reference purposes. The channel ID is consistent with ONS 15454 and will be used in unit identification.

14.6.1.1 Key Features

The 32MUX-O features include:

- Arrayed waveguide grating (AWG) device that enables full multiplexing functions for the channels.
- Each single-channel port is equipped with VOAs for automatic optical power regulation prior to multiplexing. In the case of electrical power failure, the VOA is set to its maximum attenuation for safety purposes. A manual VOA setting is also available.
- Each single-channel port is monitored using a photodiode to enable automatic power regulation.
- An additional optical monitoring port with 1/99 splitting ratio is available.

14.6.1.2 Faceplate

Figure 14-20 shows the 32MUX-O faceplate.

Figure 14-20 32MUX-O Faceplate

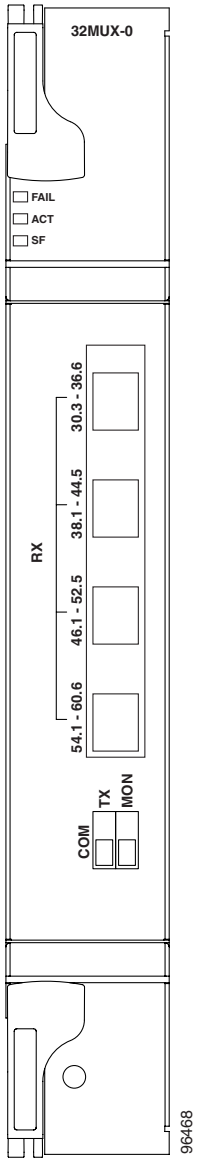

The 32MUX-O has four multifiber push-on (MPO) 8-fiber optical ribbon connectors on its front panel for the client input interfaces and two LC-PC-II optical connectors, one for the main output and the other for the monitor port.

14.6.1.3 Block Diagrams

Figure 14-21 shows the 32MUX-O block diagram.

Figure 14-21 32MUX-O Block Diagram

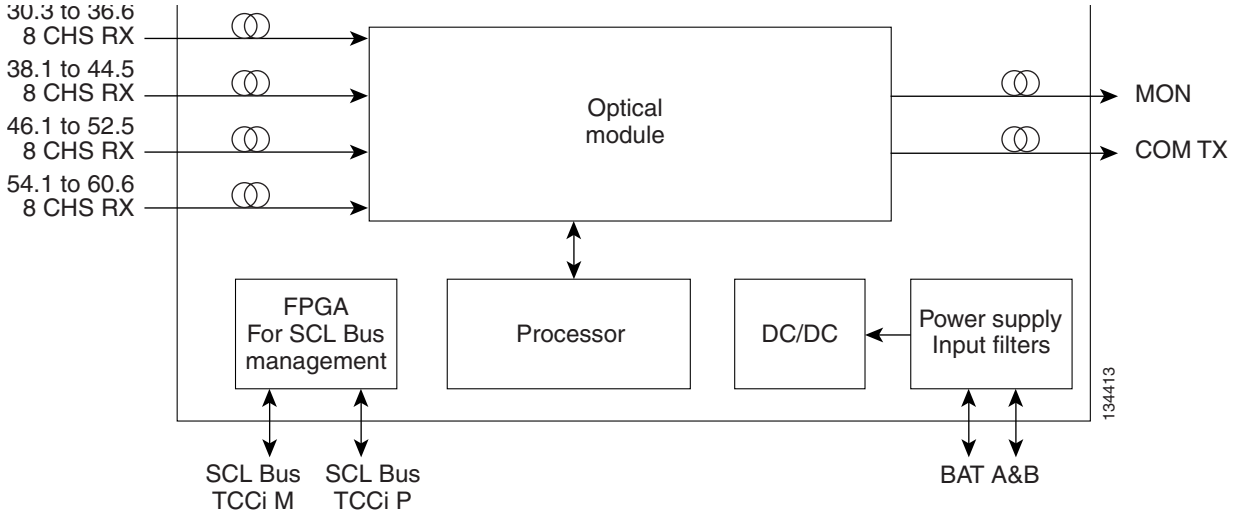

Figure 14-22 shows the 32MUX-O optical module functional block diagram.

Figure 14-22 32MUX-O Optical Module Functional Block Diagram

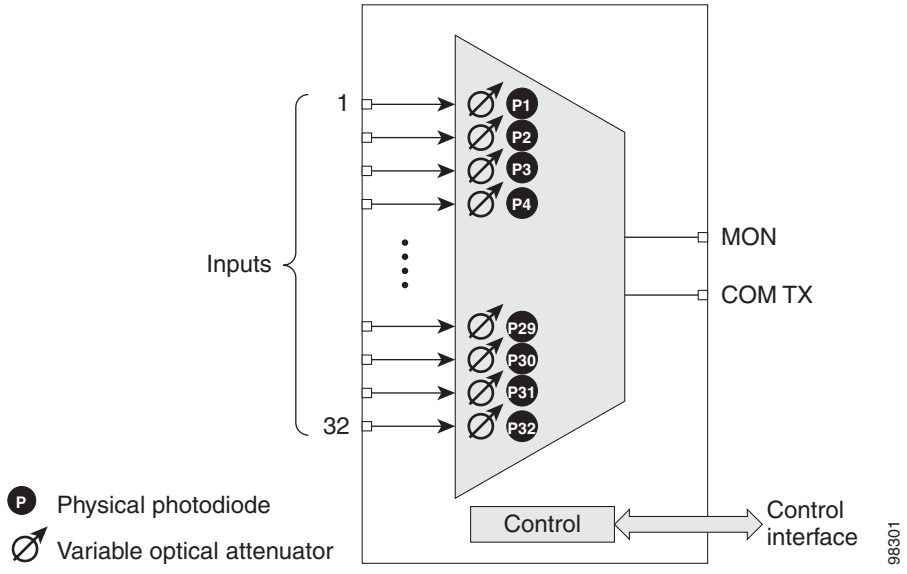

14.6.1.4 Power Monitoring

Physical photodiodes P1 through P32 monitor the power for the 32MUX-O card. The returned power level values are calibrated to the ports as shown in Table 14-25.

Table 14-25 32MUX-O Port Calibration

Photodiode	CTC "Type" Name	Calibrated to Port
P1 - P32	ADD	COM TX

14.6.1.5 32MUX-O Card-Level Indicators

The 32MUX-O card has three card-level LED indicators, described in Table 14-26.

Table 14-26 32MUX-O Card-Level Indicators

Card-Level Indicators	Description
Red FAIL LED	The red FAIL LED indicates that the card's processor is not ready or that there is an internal hardware failure. Replace the card if the red FAIL LED persists.
Green ACT LED	The green ACT LED indicates that the 32MUX-O is carrying traffic or is traffic-ready.
Amber SF LED	The amber SF LED indicates a signal failure on one or more of the card's ports. The amber SF LED also illuminates when the transmit and receive fibers are incorrectly connected. When the fibers are properly connected, the light turns off.

14.6.1.6 32MUX-O Port-Level Indicators

You can find the status of the card ports using the LCD screen on the ONS 15454 fan-tray assembly. Use the LCD to view the status of any port or card slot; the screen displays the number and severity of alarms for a given port or slot. The 32MUX-O card has five sets of ports located on the faceplate.

COM Tx is the line output. MON is the optical monitoring port. The xx.x-yy.y RX ports represent the four groups of eight channels ranging from xx.x wavelength to yy.y wavelength according to the channel plan.

14.6.2 32DMX-O Card

The 32-Channel Demultiplexer (32DMX-O) card demultiplexes 32 100-GHz-spaced channels identified in the channel plan. The 32DMX-O takes up two slots in an ONS 15454 and can be installed in Slots 1 to 5 and 12 to 16.

14.6.2.1 Key Features

The DMX-O features include:

- AWG that enables channel demultiplexing functions.

- Each single-channel port is equipped with VOAs for automatic optical power regulation after demultiplexing. In the case of electrical power failure, the VOA is set to its maximum attenuation for safety purposes. A manual VOA setting is also available.

Note In contrast, the single-slot 32DMX card does not have VOAs on each drop port for optical power regulation. The 32DMX optical demultiplexer module is used in conjunction with the 32-Channel Wavelength Selective Switch (32WSS) card in ONS 15454 Multiservice Transport Platform (MSTP) nodes.

- Each single-channel port is monitored using a photodiode to enable automatic power regulation.

14.6.2.2 Faceplate

Figure 14-23 shows the 32DMX-O card faceplate.

Figure 14-23 32DMX-O Faceplate

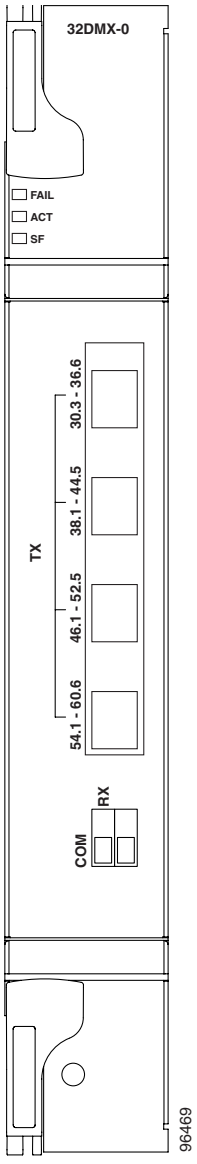

14.6.2.3 Block Diagrams

Figure 14-24 shows the 32DMX-O block diagram.

Figure 14-24 32DMX-O Block Diagram

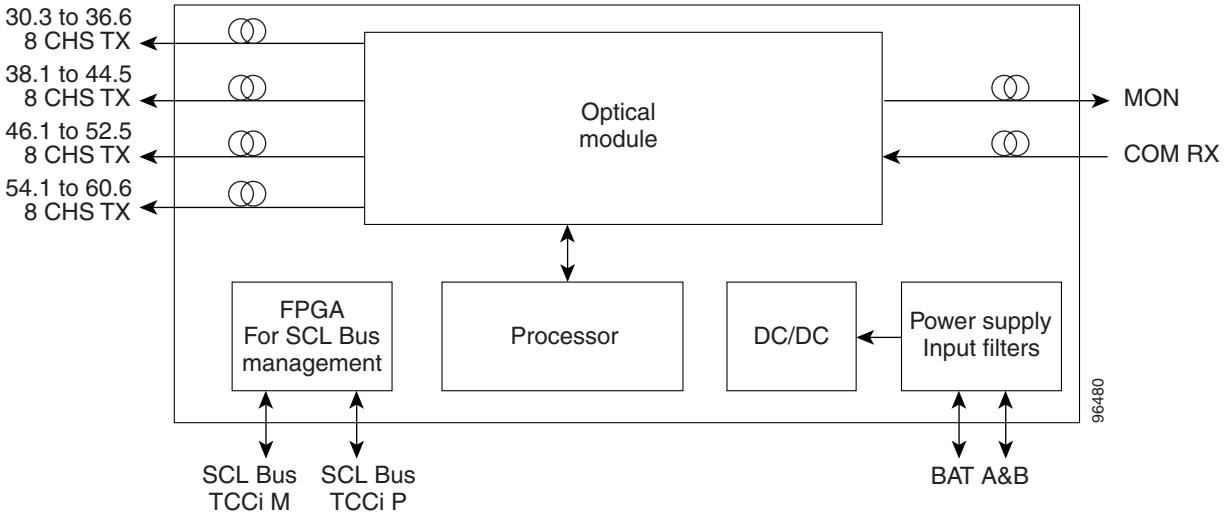

Figure 14-25 shows the 32DMX-O optical module functional block diagram.

Figure 14-25 32DMX-O Optical Module Functional Block Diagram

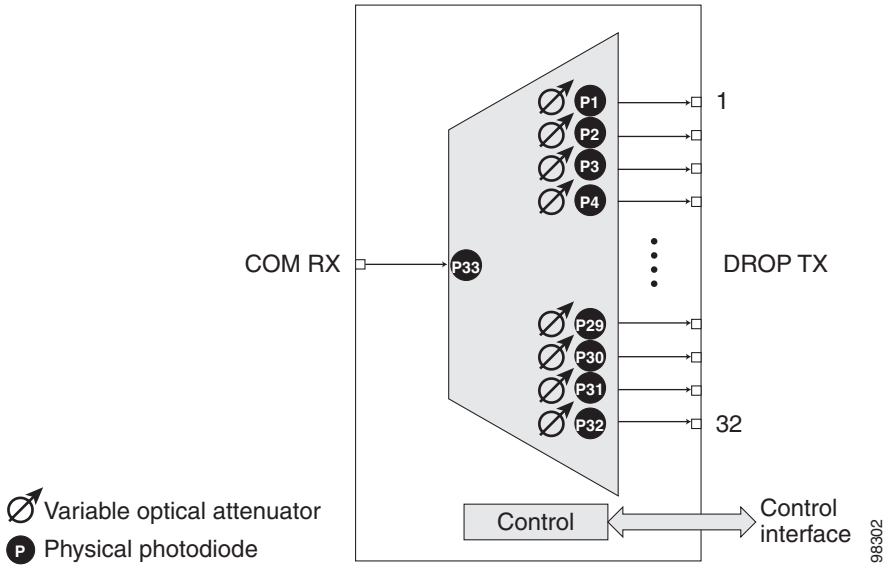

14.6.2.4 Power Monitoring

Physical photodiodes P1 through P32 and P33 monitor the power for the 32DMX-O card. The returned power level values are calibrated to the ports as shown in Table 14-27.

Table 14-27 32DMX-O Port Calibration

Photodiode	CTC "Type" Name	Calibrated to Port
P1 - P32	DROP	DROP TX
P33	INPUT COM	COM RX

14.6.2.5 32DMX-O Card-Level Indicators

The 32DMX-O card has three card-level LED indicators, described in Table 14-28.

Table 14-28 32DMX-O Card-Level Indicators

Card-Level Indicators	Description
Red FAIL LED	The red FAIL LED indicates that the card's processor is not ready or that there is an internal hardware failure. Replace the card if the red FAIL LED persists.
Green ACT LED	The green ACT LED indicates that the 32DMX-O is carrying traffic or is traffic-ready.
Amber SF LED	The amber SF LED indicates a signal failure on one or more of the card's ports. The amber SF LED also illuminates when the transmit and receive fibers are incorrectly connected. When the fibers are properly connected, the light turns off.

14.6.2.6 32DMX-O Port-Level Indicators

You can find the status of the card ports using the LCD screen on the ONS 15454 fan-tray assembly. Use the LCD to view the status of any port or card slot; the screen displays the number and severity of alarms for a given port or slot. The 32DMX-O card has five sets of ports located on the faceplate. MON is the output monitor port. COM RX is the line input. The xx.x-yy.y Tx ports represent the four groups of eight channels ranging from xx.x wavelength to yy.y wavelength according to the channel plan.

14.6.3 32DMX Card

The 32-Channel Demultiplexer card (32DMX) is a single-slot optical demultiplexer. The card receives an aggregate optical signal on its COM RX port and demultiplexes it into to 32 100-GHz-spaced channels. The 32DMX card can be installed in Slots 1 to 6 and in Slots 12 to 17.

The 32DMX card is designed specifically for use in ONS 15454 DWDM nodes. The 32DMX card works in conjunction with the 32WSS card to create a software-controlled network element with ROADM functionality. ROADM functionality requires two 32DMX single-slot cards and two 32WSS double-slot cards (six slots in the ONS 15454 chassis).

Equipped with ROADM functionality, ONS 15454 MSTP nodes can be configured at the optical channel level using CTC, Cisco MetroPlanner, and Cisco Transport Manager (CTM). Both the 32DMX card and 32WSS card utilize planar lightwave circuit (PLC) technology to perform wavelength-level processing.

14.6.3.1 Key Features

The 32DMX includes these high-level features:

- COM RX port: COM RX is the input port for the aggregate optical signal being demultiplexed. This port is supported by both a VOA for optical power regulation and a photodiode for optical power monitoring.
- DROP ports (1-32): On its output, the 32DMX provides 32 drop ports that are typically used for dropping channels within the ROADM node. Each drop port has a photodiode for optical power monitoring. Unlike the two-slot 32DMX-O demultiplexer, the drop ports on the 32DMX do not have a VOA per channel for optical power regulation.

A terminal site can be configured using only a 32WSS card and a 32DMX card plugged into the east or west side of the shelf.

14.6.3.2 Faceplate

Figure 14-26 shows the 32DMX card front panel and the basic traffic flow through the ports.

Figure 14-26 32DMX Faceplate and Ports

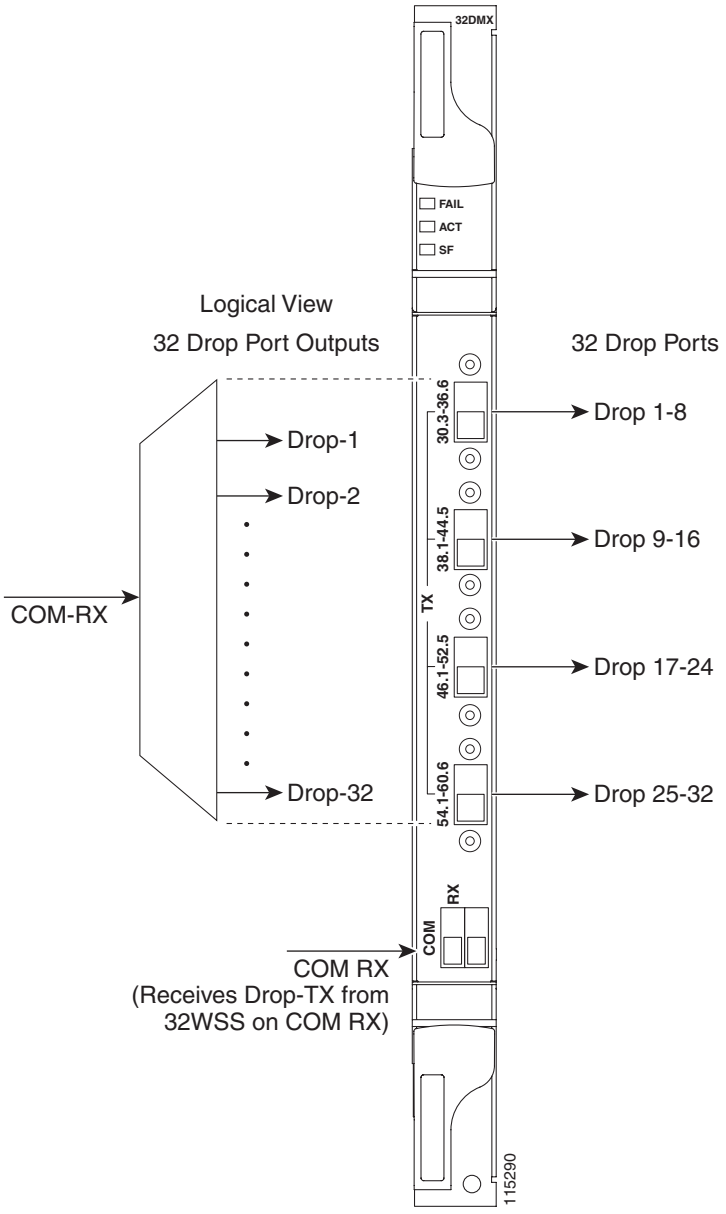

The 32DMX front panel has connectors for 32 DROP TX ports. These ports are connected using four 8-fiber multifiber push-on (MPO) ribbon connectors. The incoming optical signal to the demultiplexer comes into the COM RX. This input port is connected using a single LC duplex optical connector.

14.6.3.3 Block Diagrams

A block diagram of the 32DMX card is shown in Figure 14-27.

Figure 14-27 32DMX Block Diagram

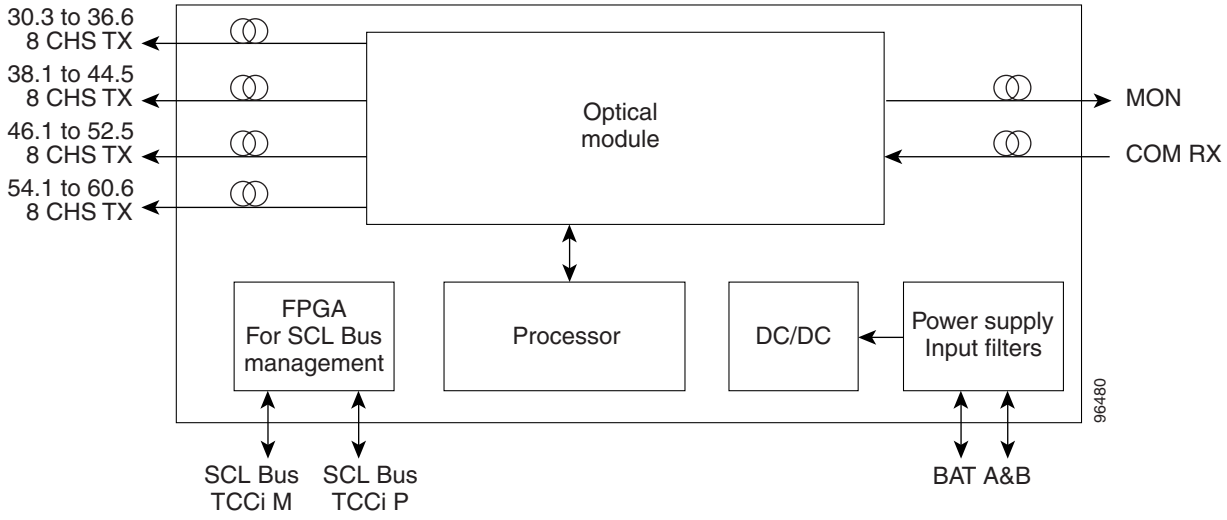

Figure 14-28 shows the 32DMX optical module functional block diagram.

Figure 14-28 32DMX Optical Module Functional Block Diagram

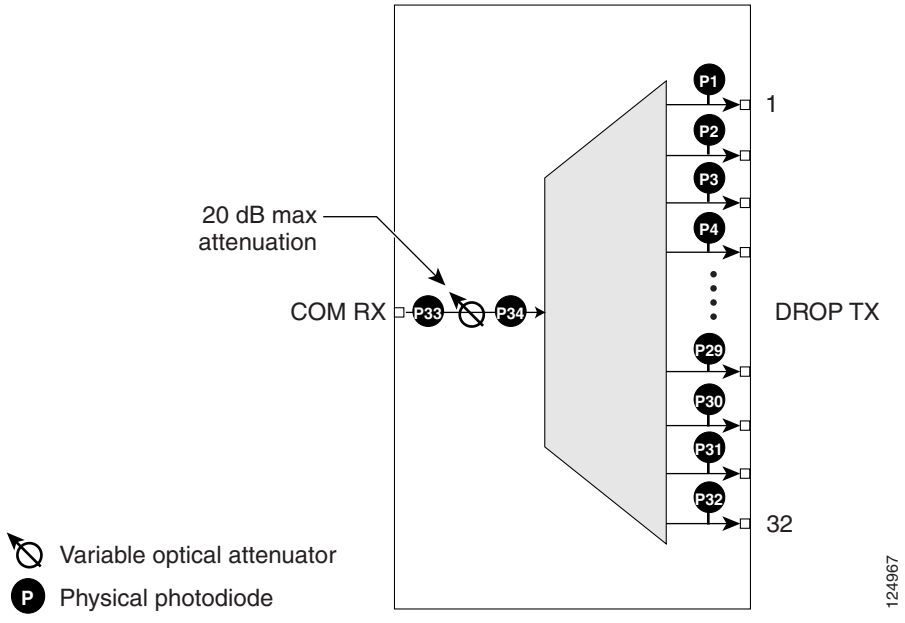

14.6.3.4 Power Monitoring

Physical photodiodes P1 through P32 and P33 monitor the power for the 32DMX card. The returned power level values are calibrated to the ports as shown in Table 14-29.

Table 14-29 32DMX Port Calibration

Photodiode	CTC "Type" Name	Calibrated to Port
P1 - P32	DROP	DROP TX Channel
P33	INPUT COM	COM RX

14.6.3.5 32DMX Card-Level Indicators

Table 14-30 describes the three card-level LED indicators on the 32DMX card.

Table 14-30 32DMX Card-Level Indicators

Card-Level Indicators	Description
Red FAIL LED	The red FAIL LED indicates that the card's processor is not ready or that there is an internal hardware failure. Replace the card if the red FAIL LED persists.
Green ACT LED	The green ACT LED indicates that the 32DMX card is carrying traffic or is traffic-ready.
Amber SF LED	The amber SF LED indicates a signal failure on one or more of the card's ports. The amber SF LED also illuminates when the transmit and receive fibers are incorrectly connected. When the fibers are properly connected, the light turns off.

14.6.3.6 32DMX Port-Level Indicators

You can find the status of the 32DMX ports using the LCD screen on the ONS 15454 fan-tray assembly. Use the LCD to view the status of any port or card slot; the screen displays the number and severity of alarms for a given port or slot.

The 32DMX card has five ports located on the faceplate. The port labeled COM RX is the line input (it typically receives DROP TX from the 32WSS module). The TX ports are 32 drop ports. The connectors provide four groups of eight channels ranging from xx.x wavelength to yy.y wavelength according to the channel plan.

14.6.4 4MD-xx.x Card

The 4-Channel Multiplexer/Demultiplexer (4MD-xx.x) card multiplexes and demultiplexes four 100-GHz-spaced channels identified in the channel plan. The 4MD-xx.x card is designed to be used with band OADMs (both AD-1B-xx.x and AD-4B-xx.x).

The card is bidirectional. The demultiplexer and multiplexer functions are implemented in two different sections of the same card. In this way, the same card can manage signals flowing in opposite directions.

There are eight versions of this card that correspond with the eight sub-bands specified in Table 14-31. The 4MD-xx.x can be installed in Slots 1 to 6 and 12 to 17.

14.6.4.1 Key Features

The 4MD-xx.x has the following features implemented inside a plug-in optical module:

- Passive cascade of interferential filters perform the channel multiplex/demultiplex function.
- Software controlled VOAs at every port of the multiplex section to regulate the optical power of each multiplexed channel.
- Software monitored photodiodes at the input and output multiplexer and demultiplexer ports for power control and safety purposes.
- Software-monitored “virtual photodiodes” at the common DWDM output and input ports. A “virtual photodiode” is a firmware calculation of the optical power at that port. This calculation is based on the single channel photodiode reading and insertion losses of the appropriated paths.

Table 14-31 shows the band IDs and the add/drop channel IDs for the 4MD-xx.x card.

Table 14-31 4MD-xx.x Channel Sets

Band ID	Add/Drop Channel IDs
Band 30.3 (A)	30.3, 31.2, 31.9, 32.6
Band 34.2 (B)	34.2, 35.0, 35.8, 36.6
Band 38.1 (C)	38.1, 38.9, 39.7, 40.5
Band 42.1 (D)	42.1, 42.9, 43.7, 44.5
Band 46.1 (E)	46.1, 46.9, 47.7, 48.5
Band 50.1 (F)	50.1, 50.9, 51.7, 52.5
Band 54.1 (G)	54.1, 54.9, 55.7, 56.5
Band 58.1 (H)	58.1, 58.9, 59.7, 60.6

14.6.4.2 Faceplate

Figure 14-29 shows the 4MD-xx.x faceplate.

Figure 14-29 4MD-xx.x Faceplate

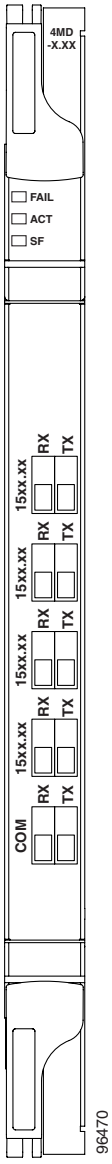

14.6.4.3 Block Diagrams

Figure 14-30 shows the 4MD-xx.x block diagram.

Figure 14-30 4MD-xx.x Block Diagram

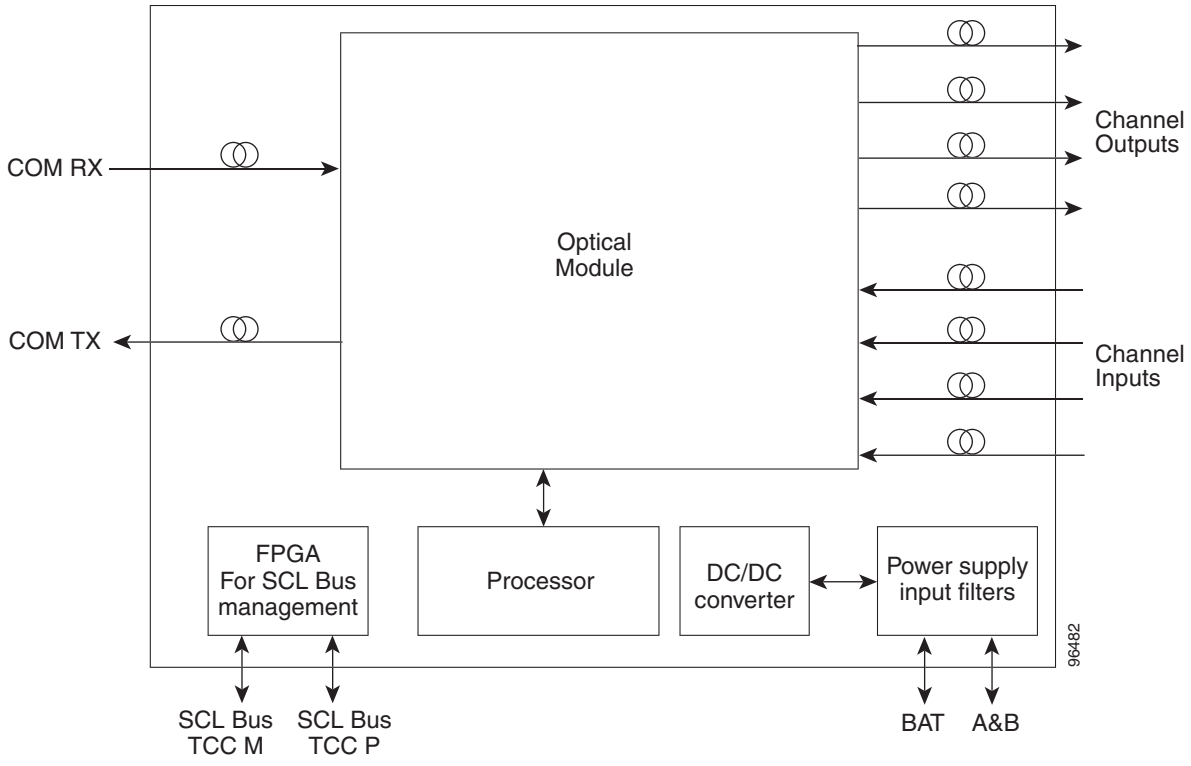

Figure 14-31 shows the 4MD-xx.x optical module functional block diagram.

Figure 14-31 4MD-xx.x Optical Module Functional Block Diagram

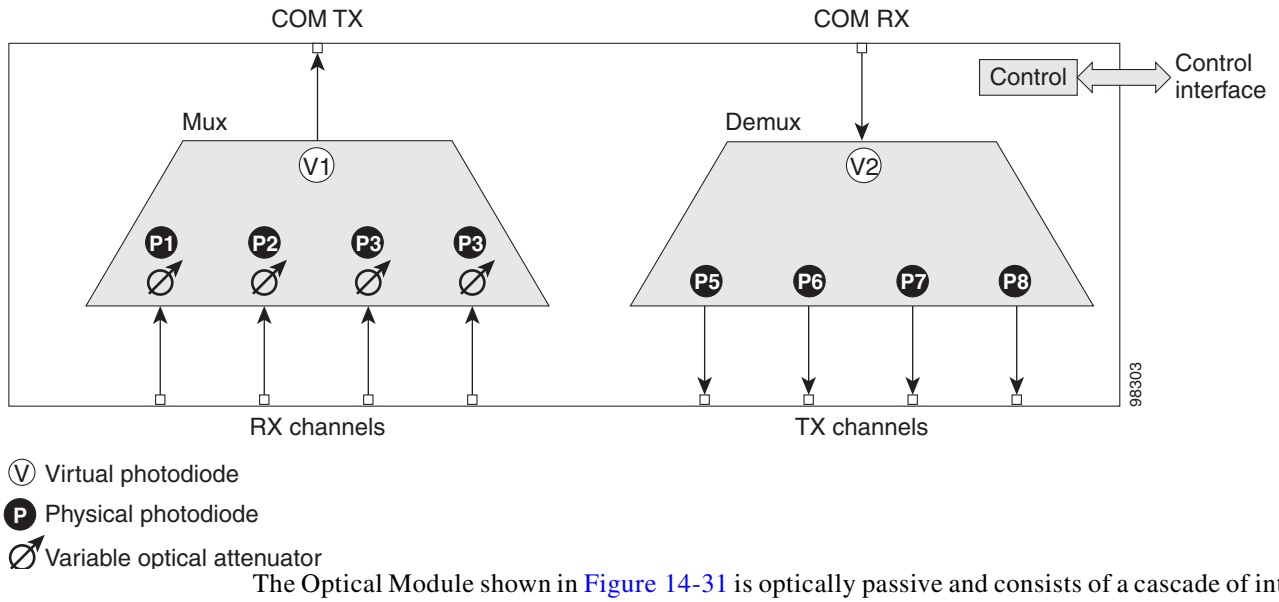

The Optical Module shown in Figure 14-31 is optically passive and consists of a cascade of interferential filters that perform the channel mux/demux functions.

VOAs are present in every input path of the multiplex section in order to regulate the optical power of each multiplexed channel. Some optical input and output ports are monitored by means of photodiodes implemented both for power control and for safety purposes. An internal control manages VOA settings and functionality as well as photodiode detection and alarm thresholds. The power at the main output and input ports is monitored through the use of "virtual photodiodes." A virtual photodiode is implemented in the firmware of the plug-in module. This firmware calculates the power on a port, summing the measured values from all single channel ports (and applying the proper path insertion loss) then providing the TCC2 with the obtained value.

14.6.4.4 Power Monitoring

Physical photodiodes P1 through P8, and virtual photodiodes V1 and V2 monitor the power for the 4MD-xx.x card. The returned power level values are calibrated to the ports as shown in Table 14-32.

Table 14-32 4MD-xx.x Port Calibration

Photodiode	CTC "Type" Name	Calibrated to Port
P1 - P4	ADD	COM TX
P5 - P8	DROP	DROP TX Channel
V1	OUT COM	COM TX
V2	IN COM	COM RX

14.6.4.5 4MD-xx.x Card-Level Indicators

The 4MD-xx.x card has three card-level LED indicators, described in Table 14-33.

Table 14-33 4MD-xx.x Card-Level Indicators

Card-Level Indicators	Description
Red FAIL LED	The red FAIL LED indicates that the card's processor is not ready or that there is an internal hardware failure. Replace the card if the red FAIL LED persists.
Green ACT LED	The green ACT LED indicates that the 4MD-xx.x card is carrying traffic or is traffic-ready.
Amber SF LED	The amber SF LED indicates a signal failure on one or more of the card's ports. The amber SF LED also illuminates when the transmit and receive fibers are incorrectly connected. When the fibers are properly connected, the light turns off.

14.6.4.6 4MD-xx.x Port-Level Indicators

You can find the status of the card ports using the LCD screen on the ONS 15454 fan-tray assembly. Use the LCD to view the status of any port or card slot; the screen displays the number and severity of alarms for a given port or slot. The 4MD-xx.x card has five sets of ports located on the faceplate. COM RX is the line input. COM TX is the line output. The 15xx.x TX ports represent demultiplexed channel outputs 1 to 4. The 15xx.x RX ports represent multiplexed channel inputs 1 to 4.

14.7 Optical Add/Drop Multiplexer Cards

This section discusses the optical add/drop multiplexer cards.

14.7.1 AD-1C-xx.x Card

The 1-Channel OADM (AD-1C-xx.x) card passively adds or drops one of the 32 channels utilized within the 100-GHz-spacing of the DWDM card system. Thirty-two versions of this card—each designed only for use with one wavelength—are used in the ONS 15454 DWDM system. Each wavelength version of the card has a different part number.

The AD-1C-xx.x can be installed in Slots 1 to 6 and 12 to 17.

The AD-1C-xx.x has the following internal features:

- Two cascaded passive optical interferential filters perform the channel add and drop functions.
- One software-controlled VOA regulates the optical power of the inserted channel.
- Software-controlled VOA regulates the insertion loss of the express optical path.
- Internal control of the VOA settings and functions, photodiode detection, and alarm thresholds.
- Software-monitored virtual photodiodes (firmware calculations of port optical power) at the common DWDM output and input ports.

14.7.1.1 Faceplate

Figure 14-32 shows the AD-1C-xx.x faceplate.

Figure 14-32 AD-1C-xx.x Faceplate

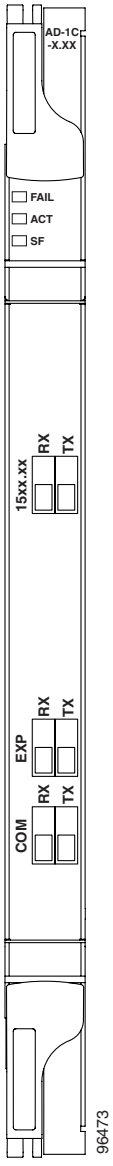

14.7.1.2 Block Diagrams

Figure 14-33 shows the AD-1C-xx.x block diagram.

Figure 14-33 AD-1C-xx.x Block Diagram

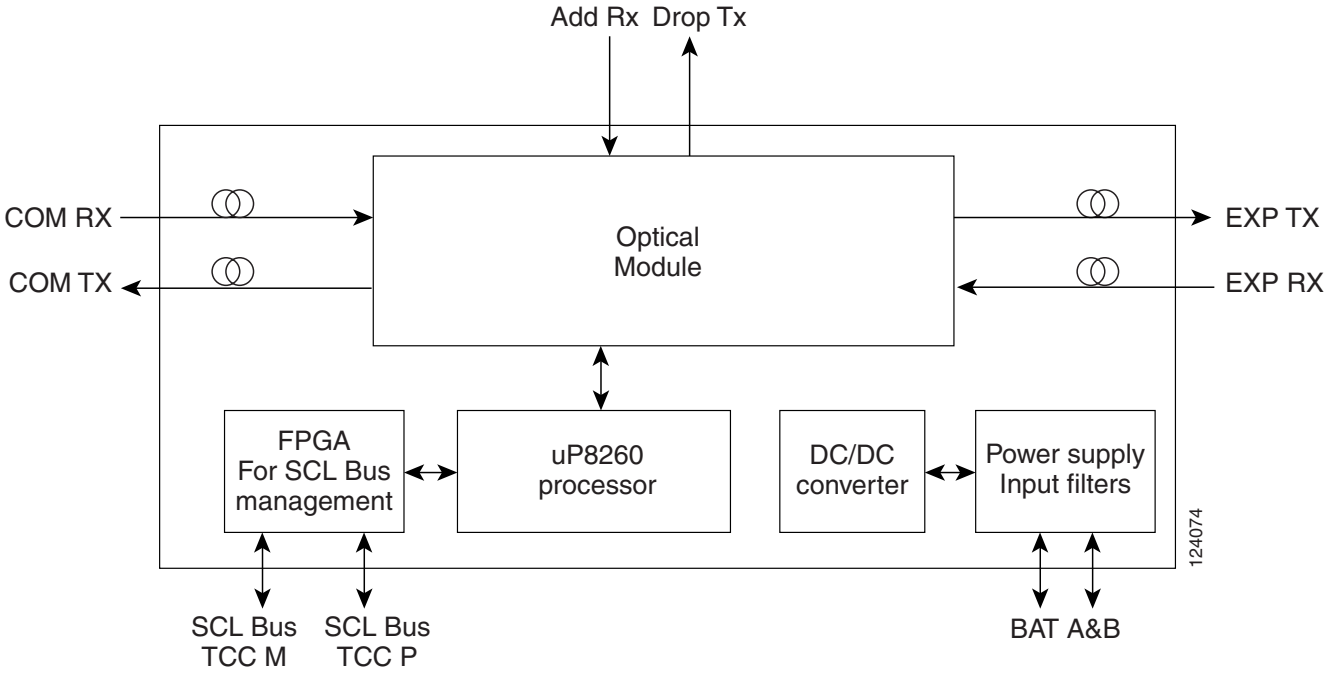

Figure 14-34 shows the AD-1C-xx.x optical module functional block diagram.

Figure 14-34 AD-1C-xx.x Optical Module Functional Block Diagram

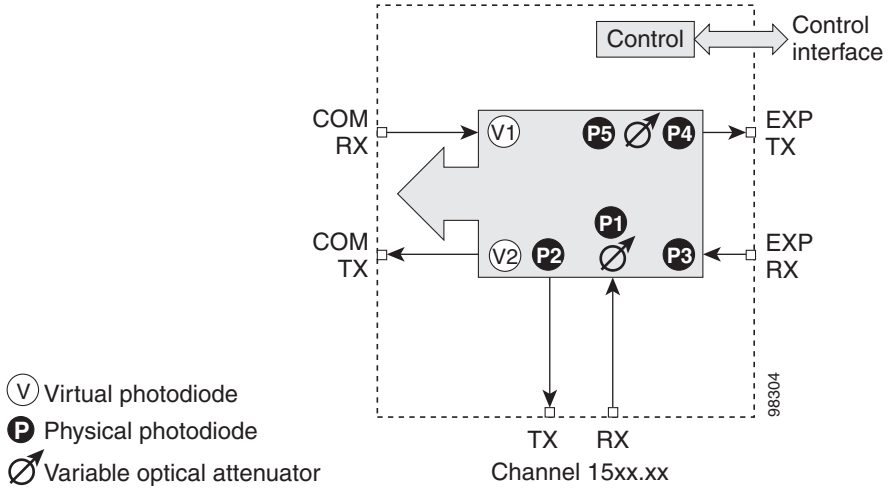

14.7.1.3 Power Monitoring

Physical photodiodes P1 through P4, and virtual photodiodes V1 and V2 monitor the power for the AD-1C-xx.x card. The returned power level values are calibrated to the ports as shown in Table 14-34.

Table 14-34 AD-1C-xx.x Port Calibration

Photodiode	CTC "Type" Name	Calibrated to Port
P1	ADD	COM TX
P2	DROP	DROP TX Channel
P3	IN EXP	EXP RX
P4	OUT EXP	EXP TX
V1	IN COM	COM RX
V2	OUT COM	COM TX

14.7.1.4 AD-1C-xx.x Card-Level Indicators

The AD-1C-xx.x card has three card-level LED indicators, described in Table 14-35.

Table 14-35 AD-1C-xx.x Card-Level Indicators

Card-Level Indicators	Description
Red FAIL LED	The red FAIL LED indicates that the card's processor is not ready or that there is an internal hardware failure. Replace the card if the red FAIL LED persists.
Green ACT LED	The green ACT LED indicates that the AD-1C-xx.x card is carrying traffic or is traffic-ready.
Amber SF LED	The amber SF LED indicates a signal failure. The SF LED also illuminates when the transmitting and receiving fibers are incorrectly connected. When the fibers are properly connected, the LED turns off.

14.7.1.5 AD-1C-xx.x Port-Level Indicators

You can find the status of the card port using the LCD screen on the ONS 15454 fan-tray assembly. Use the LCD to view the status of any port or card slot; the screen displays the number and severity of alarms for a given port or slot. The AD-1C-xx.x has six LC-PC-II optical ports: two for add/drop channel client input and output, two for express channel input and output, and two for communication.

14.7.2 AD-2C-xx.x Card

The 2-Channel OADM (AD-2C-xx.x) card passively adds or drops two adjacent 100-GHz channels within the same band. Sixteen versions of this card—each designed for use with one pair of wavelengths—are used in the ONS 15454 DWDM system. The card bidirectionally adds and drops in two different sections on the same card to manage signal flow in both directions. Each version of the card has a different part number.

14.7.2.1 Key Features

The AD-2C-xx.x has the following features:

- Passive cascade of interferential filters perform the channel add and drop functions.
- Two software-controlled VOAs in the add section, one for each add port, regulate the optical power of inserted channels.
- Software-controlled VOAs regulate insertion loss on express channels.
- Internal control of the VOA settings and functions, photodiode detection, and alarm thresholds.
- Software-monitored virtual photodiodes (firmware calculation of port optical power) at the common DWDM output and input ports.

The AD-2C-xx.x cards are provisioned for the wavelength pairs in Table 14-36. In this table, channel IDs are given rather than wavelengths. To compare channel IDs with the actual wavelengths they represent, see Table 14-7 on page 14-10.

Table 14-36 AD-2C-xx.x Channel Pairs

Band ID	Add/Drop Channel ID
Band 30.3 (A)	30.3, 31.2
	31.9, 32.6
Band 34.2 (B)	34.2, 35.0
	35.8, 36.6
Band 38.1 (C)	38.1, 38.9
	39.7, 40.5
Band 42.1 (D)	42.1, 42.9
	43.7, 44.5
Band 46.1 (E)	46.1, 46.9
	47.7, 48.5
Band 50.1 (F)	50.1, 50.9
	51.7, 52.5
Band 54.1 (G)	54.1, 54.9
	55.7, 56.5
Band 58.1 (H)	58.1, 58.9
	59.7, 60.6

14.7.2.2 Faceplate

Figure 14-35 shows the AD-2C-xx.x faceplate.

Figure 14-35 AD-2C-xx.x Faceplate

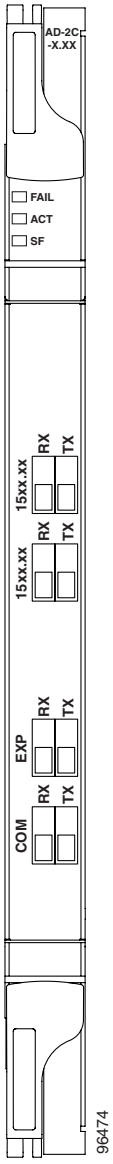

14.7.2.3 Block Diagrams

Figure 14-36 shows the AD-2C-xx.x block diagram.

Figure 14-36 AD-2C-xx.x Block Diagram

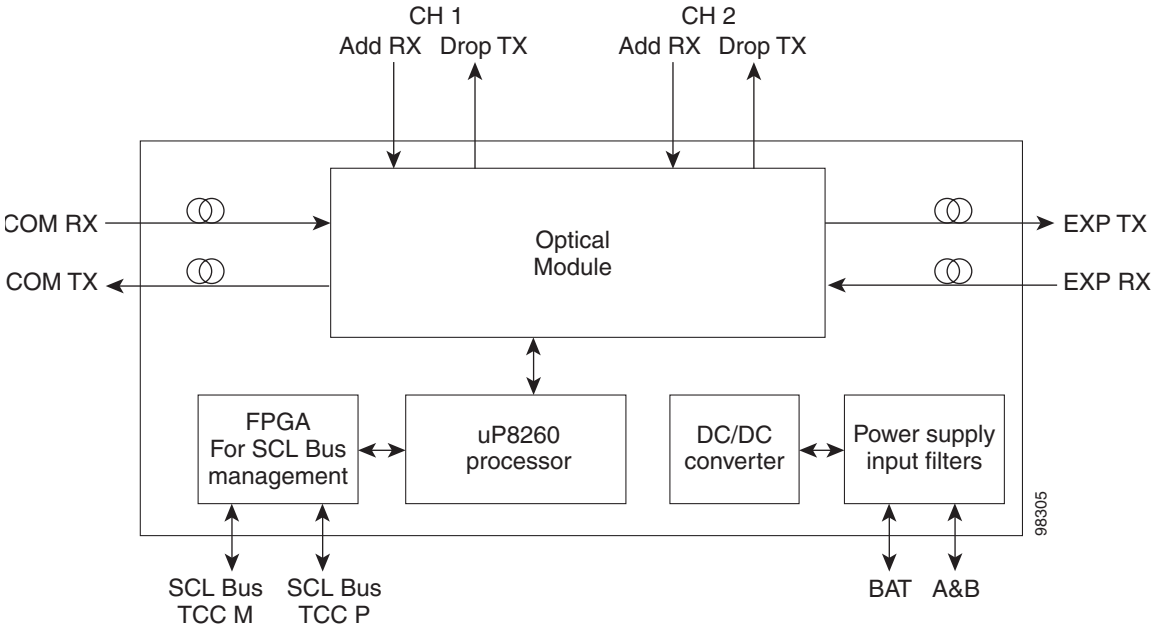

Figure 14-37 shows the AD-2C-xx.x optical module functional block diagram.

Figure 14-37 AD-2C-xx.x Optical Module Functional Block Diagram

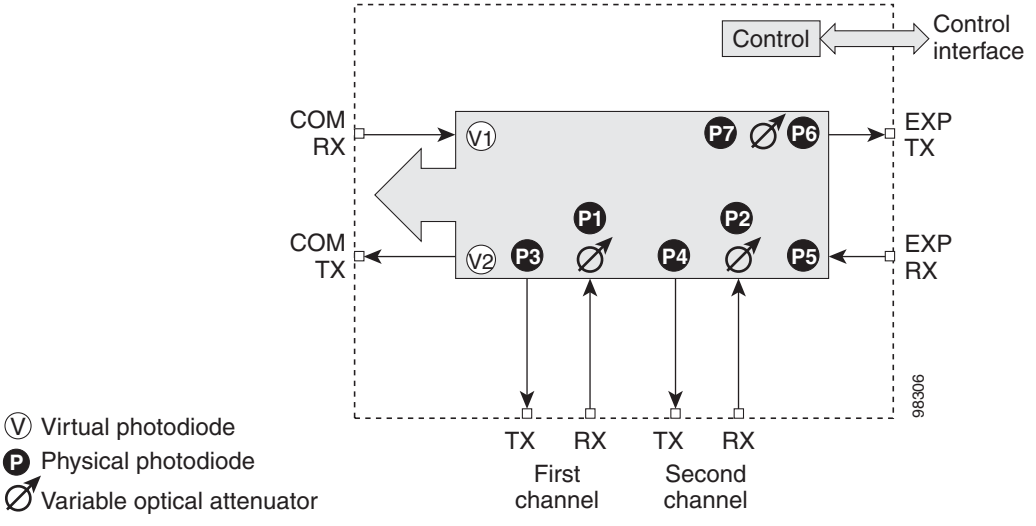

14.7.2.4 Power Monitoring

Physical photodiodes P1 through P6, and virtual photodiodes V1 and V2 monitor the power for the AD-2C-xx.x card. The returned power level values are calibrated to the ports as shown in Table 14-37.

Table 14-37 AD-2C-xx.x Port Calibration

Photodiode	CTC "Type" Name	Calibrated to Port
P1 and P2	ADD	COM TX
P3 and P4	DROP	DROP TX Channel
P5	IN EXP	EXP RX
P6	OUT EXP	EXP TX
V1	IN COM	COM RX
V2	OUT COM	COM TX

14.7.2.5 AD-2C-xx.x Card-Level Indicators

The AD-2C-xx.x card has three card-level LED indicators, described in Table 14-38.

Table 14-38 AD-2C-xx.x Card-Level Indicators

Card-Level Indicators	Description
Red FAIL LED	The red FAIL LED indicates that the card's processor is not ready or that there is an internal hardware failure. Replace the card if the red FAIL LED persists.
Green ACT LED	The green ACT LED indicates that the AD-2C-xx.x card is carrying traffic or is traffic-ready.
Amber SF LED	The amber SF LED indicates a signal failure. The amber SF LED also illuminates when the transmit and receive fibers are incorrectly connected. When the fibers are properly connected, the light turns off.

14.7.2.6 AD-2C-xx.x Port-Level Indicators

You can find the status of the card port using the LCD screen on the ONS 15454 fan-tray assembly. Use the LCD to view the status of any port or card slot; the screen displays the number and severity of alarms for a given port or slot. The AD-2C-xx.x card has eight LC-PC-II optical ports: four for add/drop channel client input and output, two for express channel input and output, and two for communication.

14.7.3 AD-4C-xx.x Card

The 4-Channel OADM (AD-4C-xx.x) card passively adds or drops all four 100-GHz-spaced channels within the same band. Eight versions of this card—each designed for use with one band of wavelengths—are used in the ONS 15454 DWDM system. The card bidirectionally adds and drops in two different sections on the same card to manage signal flow in both directions. There are eight versions of this card with eight part numbers.

14.7.3.1 Key Features

The AD-4C-xx.x has the following features:

- Passive cascade of interferential filters perform the channel add and drop functions.
- Four software-controlled VOAs in the add section, one for each add port, regulate the optical power of inserted channels.
- Two software-controlled VOAs regulate insertion loss on express and drop path, respectively.
- Internal control of the VOA settings and functions, photodiode detection, and alarm thresholds.
- Software-monitored virtual photodiodes (firmware calculation of port optical power) at the common DWDM output and input ports.

The AD-4C-xx.x cards are provisioned for the wavelength pairs in Table 14-39 on page 14-70. In this table, channel IDs are given rather than wavelengths. To compare channel IDs with the actual wavelengths they represent, see Table 14-7 on page 14-10.

Table 14-39 AD-4C-xx.x Channel Sets

Band ID	Add/Drop Channel IDs
Band 30.3 (A)	30.3, 31.2, 31.9, 32.6
Band 34.2 (B)	34.2, 35.0, 35.8, 36.6
Band 38.1 (C)	38.1, 38.9, 39.7 40.5
Band 42.1 (D)	42.1, 42.9, 43.7, 44.5
Band 46.1 (E)	46.1, 46.9, 47.7, 48.5
Band 50.1 (F)	50.1, 50.9, 51.7, 52.5
Band 54.1 (G)	54.1, 54.9, 55.7, 56.5
Band 58.1 (H)	58.1, 58.9, 59.7, 60.6

14.7.3.2 Faceplate

Figure 14-38 shows the AD-4C-xx.x faceplate.

Figure 14-38 AD-4C-xx.x Faceplate

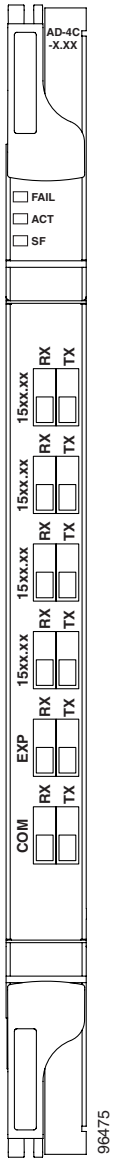

14.7.3.3 Block Diagram

Figure 14-39 shows the AD-4C-xx.x block diagram.

Figure 14-39 AD-4C-xx.x Block Diagram

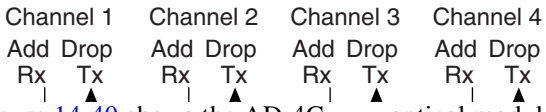

Figure 14-40 shows the AD-4C-xx.x optical module functional block diagram.

Figure 14-40 AD-4C-xx.x Optical Module Functional Block Diagram

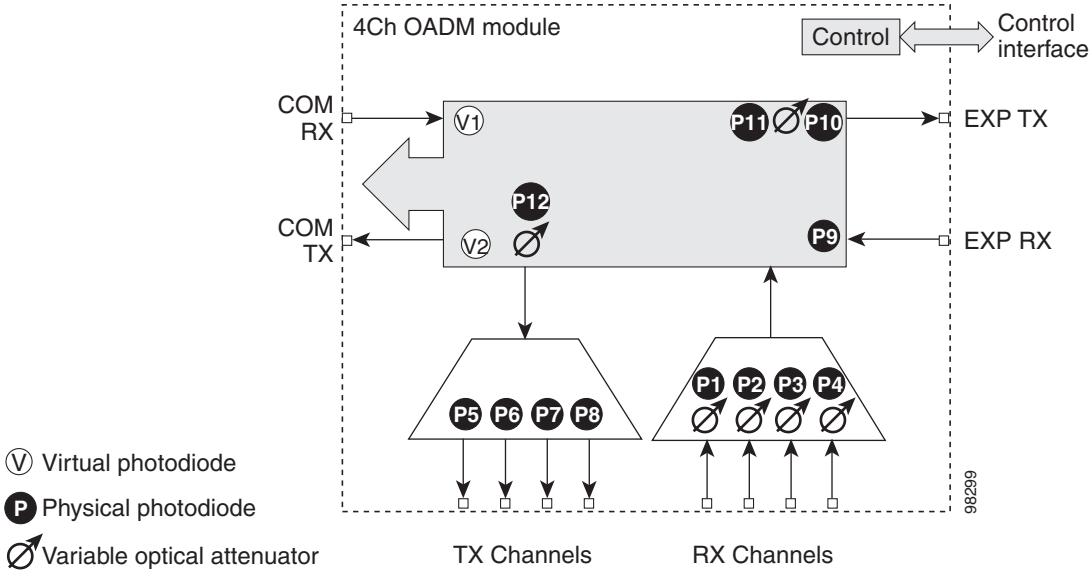

14.7.3.4 Power Monitoring

Physical photodiodes P1 through P10, and virtual photodiodes V1 and V2 monitor the power for the AD-4C-xx.x card. The returned power level values are calibrated to the ports as shown in Table 14-40.

Table 14-40 AD-4C-xx.x Port Calibration

Photodiode	CTC "Type" Name	Calibrated to Port
P1 - P4	ADD	COM TX
P5 - P8	DROP	DROP TX Channel
P9	IN EXP	EXP RX
P10	OUT EXP	EXP TX
V1	IN COM	COM RX
V2	OUT COM	COM TX

14.7.3.5 AD-4C-xx.x Card-Level Indicators

The AD-4C-xx.x card has three card-level LED indicators, described in Table 14-41.

Table 14-41 AD-4C-xx.x Card-Level Indicators

Card-Level Indicators	Description
Red FAIL LED	The red FAIL LED indicates that the card's processor is not ready or that there is an internal hardware failure. Replace the card if the red FAIL LED persists.
Green ACT LED	The green ACT LED indicates that the AD-4C-xx.x card is carrying traffic or is traffic-ready.
Amber SF LED	The amber SF LED indicates a signal failure or condition. The amber SF LED also illuminates when the transmit and receive fibers are incorrectly connected. When the fibers are properly connected, the light turns off.

14.7.3.6 AD-4C-xx.x Port-Level Indicators

You can find the status of the card port using the LCD screen on the ONS 15454 fan-tray assembly. Use the LCD to view the status of any port or card slot; the screen displays the number and severity of alarms for a given port or slot. The AD-4C-xx.x card has 12 LC-PC-II optical ports: eight for add/drop channel client input and output, two for express channel input and output, and two for communication.

14.7.4 AD-1B-xx.x Card

The 1-Band OADM (AD-1B-xx.x) card passively adds or drops a single band of four adjacent 100-GHz-spaced channels. Eight versions of this card with eight different part numbers—each version designed for use with one band of wavelengths—are used in the ONS 15454 DWDM system. The card bidirectionally adds and drops in two different sections on the same card to manage signal flow in both directions. This card can be used when there is asymmetric adding and dropping on each side (east or west) of the node; a band can be added or dropped on one side but not on the other.

The AD-1B xx.x can be installed in Slots 1 to 6 and 12 to17.

14.7.4.1 Key Features

The AD-1B-xx.x has the following features:

- Passive cascaded interferential filters perform the channel add and drop functions.
- Two software-controlled VOAs regulate the optical power flowing in the express and drop OADM paths (drop section).
- Output power of the dropped band is set by changing the attenuation of the VOA drop.
- The VOA express is used to regulate the insertion loss of the express path.
- Internal controlled VOA settings and functions, photodiode detection, and alarm thresholds.
- Software-monitored virtual photodiode (firmware calculation of port optical power) at the common DWDM output.

14.7.4.2 Faceplate

Figure 14-41 shows the AD-1B-xx.x faceplate.

Figure 14-41 AD-1B-xx.x Faceplate

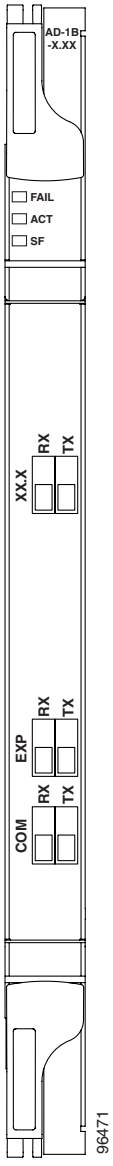

14.7.4.3 Block Diagram

Figure 14-33 shows the AD-1B-xx.x block diagram.

Figure 14-42 AD-1B-xx.x Block Diagram

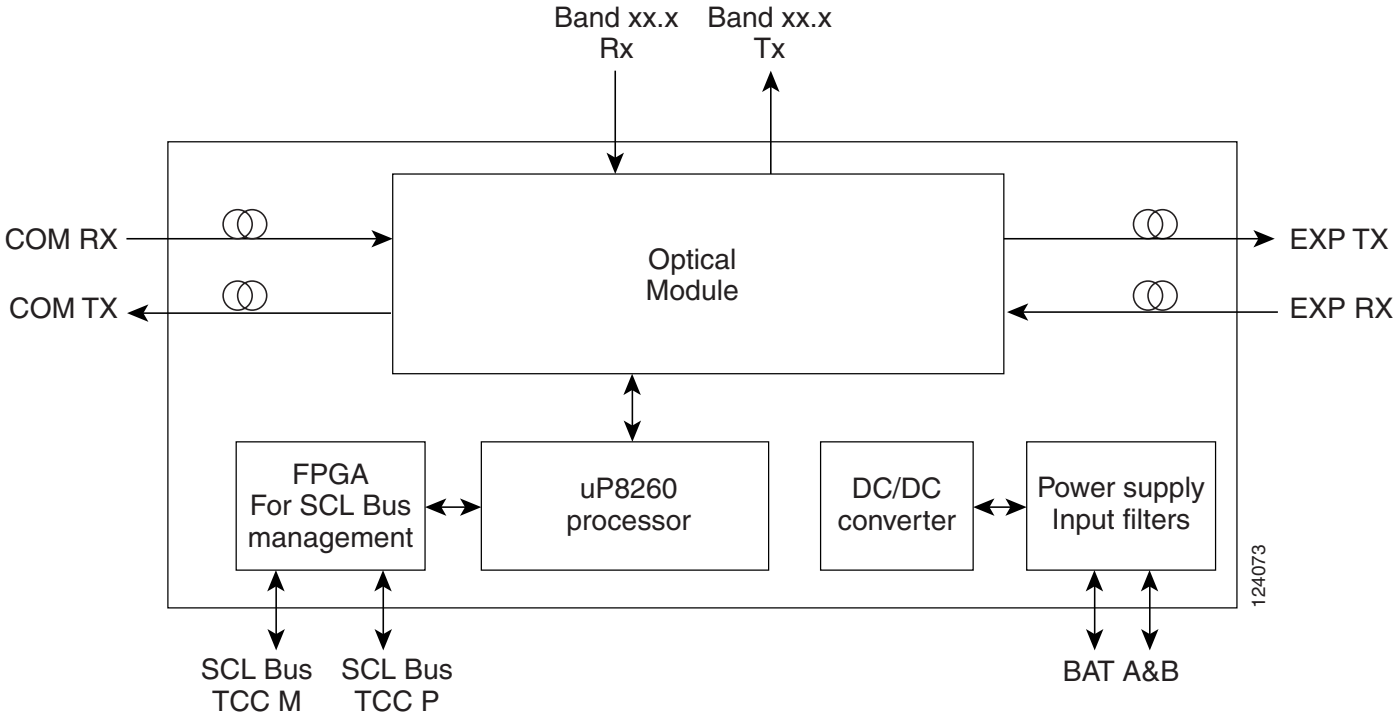

Figure 14-43 shows the AD-1B-xx.x optical module functional block diagram.

Figure 14-43 AD-1B-xx.x Optical Module Functional Block Diagram

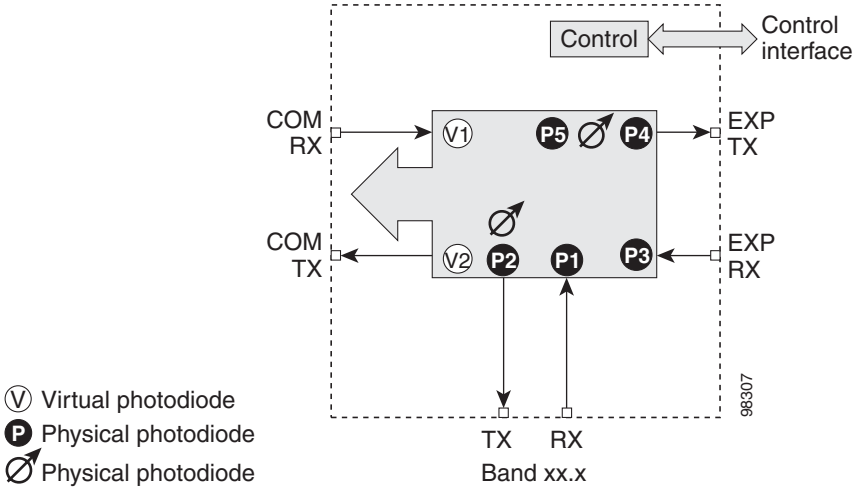

14.7.4.4 Power Monitoring

Physical photodiodes P1 through P4, and virtual photodiodes V1 and V2 monitor the power for the AD-1B-xx.x card. The returned power level values are calibrated to the ports as shown in Table 14-42.

Table 14-42 AD-1B-xx.x Port Calibration

Photodiode	CTC "Type" Name	Calibrated to Port
P1	ADD	BAND RX
P2	DROP	BAND TX
P3	IN EXP	EXP RX
P4	OUT EXP	EXP TX
V1	IN COM	COM RX
V2	OUT COM	COM TX

14.7.4.5 AD-1B-xx.x Card-Level Indicators

The AD-1B-xx.x card has three card-level LED indicators, described in Table 14-43.

Table 14-43 AD-1B-xx.x Card-Level Indicators

Card-Level Indicators	Description
Red FAIL LED	The red FAIL LED indicates that the card's processor is not ready or that there is an internal hardware failure. Replace the card if the red FAIL LED persists.
Green ACT LED	The green ACT LED indicates that the AD-1B-xx.x card is carrying traffic or is traffic-ready.
Amber SF LED	The amber SF LED indicates a signal failure. The amber SF LED also illuminates when the transmit and receive fibers are incorrectly connected. When the fibers are properly connected, the light turns off.

14.7.4.6 AD-1B-xx.x Port-Level Indicators

You can find the status of the card port using the LCD screen on the ONS 15454 fan-tray assembly. Use the LCD to view the status of any port or card slot; the screen displays the number and severity of alarms for a given port or slot. The AD-1B-xx.x has six LC-PC-II optical ports: two for add/drop channel client input and output, two for express channel input and output, and two for communication.

14.7.5 AD-4B-xx.x Card

The 4-Band OADM (AD-4B-xx.x) card passively adds or drops four bands of four adjacent 100-GHz-spaced channels. Two versions of this card with different part numbers—each version designed for use with one set of bands—are used in the ONS 15454 DWDM system. The card bidirectionally adds and drops in two different sections on the same card to manage signal flow in both directions. This card can be used when there is asymmetric adding and dropping on each side (east or west) of the node; a band can be added or dropped on one side but not on the other.

The AD1B-xx.x can be installed in Slots 1 to 6 and 12 to 17.

14.7.5.1 Key Features

The AD-4B-xx.x has the following features:

- Five software-controlled VOAs regulate the optical power flowing in the OADM paths.
- Output power of each dropped band is set by changing the attenuation of each VOA drop.
- The VOA express is used to regulate the insertion loss of the express path.
- Internal controlled VOA settings and functions, photodiode detection, and alarm thresholds.
- Software-monitored virtual photodiode (firmware calculation of port optical power) at the common DWDM output port.

14.7.5.2 Faceplate

Figure 14-44 shows the AD-4B-xx.x faceplate.

Figure 14-44 AD-4B-xx.x Faceplate

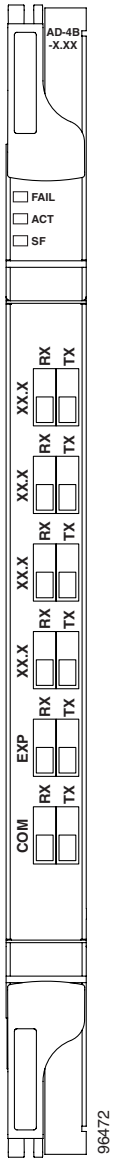

14.7.5.3 Block Diagram

Figure 14-45 shows the AD-4B-xx.x block diagram.

Figure 14-45 AD-4B-xx.x Block Diagram

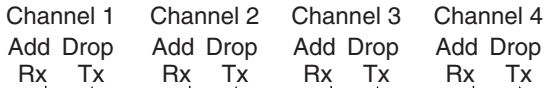

Figure 14-46 shows the AD-4B-xx.x optical module functional block diagram.

Figure 14-46 AD-4B-xx.x Optical Module Functional Block Diagram

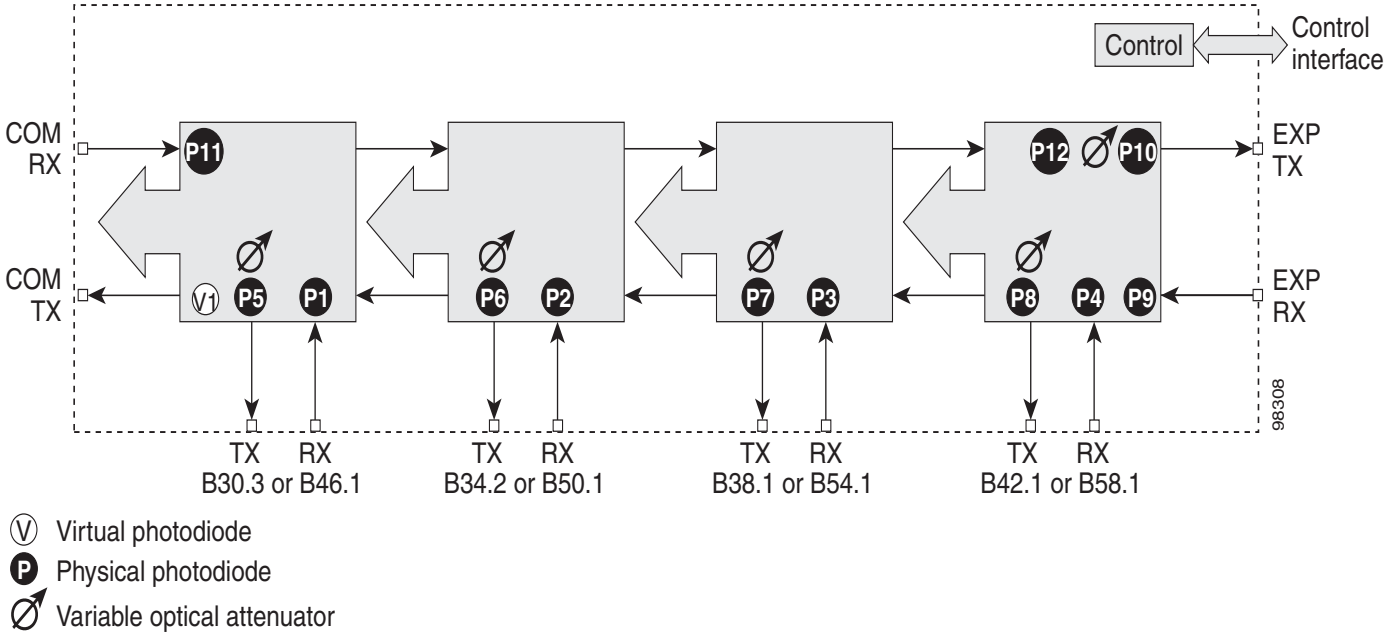

14.7.5.4 Power Monitoring

Physical photodiodes P1 through P11, and virtual photodiode V1 monitor the power for the AD-4B-xx.x card. The returned power level values are calibrated to the ports as shown in Table 14-44.

Table 14-44 AD-4B-xx.x Port Calibration

Photodiode	CTC "Type" Name	Calibrated to Port
P1 - P4	ADD	COM TX
P5 - P8	DROP	DROP Channel TX
P9	IN EXP	EXP RX
P10	OUT EXP	EXP TX
P11	IN COM	COM RX
V1	OUT COM	COM TX

14.7.5.5 AD-4B-xx.x Card-Level Indicators

The AD-4B-xx.x card has three card-level LED indicators, described in Table 14-45.

Table 14-45 AD-4B-xx.x Card-Level Indicators

Card-Level Indicators	Description
Red FAIL LED	The red FAIL LED indicates that the card's processor is not ready or that there is an internal hardware failure. Replace the card if the red FAIL LED persists.
Green ACT LED	The green ACT LED indicates that the AD-4B-xx.x card is carrying traffic or is traffic-ready.
Amber SF LED	The amber SF LED indicates a signal failure. The amber SF LED also illuminates when the transmit and receive fibers are incorrectly connected. When the fibers are properly connected, the light turns off.

14.7.5.6 AD-4B-xx.x Port-Level Indicators

You can find the status of the card port using the LCD screen on the ONS 15454 fan-tray assembly. Use the LCD to view the status of any port or card slot; the screen displays the number and severity of alarms for a given port or slot. The AD-4B-xx.x has 12 LC-PC-II optical ports: eight for add/drop band client input and output, two for express channel input and output, and two for communication.

14.7.6 32WSS Card

The 32-Channel Wavelength Selective Switch (32WSS) card performs channel add/drop processing within the ONS 15454 DWDM node. The 32WSS works in conjunction with the 32DMX to implement ROADM functionality. Equipped with ROADM functionality, the ONS 15454 DWDM can be configured to add or drop individual optical channels using CTC, Cisco MetroPlanner, and CTM.

A ROADM network element utilizes two 32WSS cards (two slots each) and two 32DMX cards (one slot each), for a total of six slots in the chassis. For a diagram of a typical ROADM configuration, see "ROADM Node" on page -8. The 32WSS card can be installed in slots 1-2, 3-4, 5-6, or in slots 12-13, 14-15, or 16-17.

The 32WSS has six types of ports:

- ADD RX ports (1-32): These ports are used for adding channels. Each add channel is associated with an individual switch element that selects whether an individual channel is added. Each add port has optical power regulation provided by a VOA.
- EXP RX port: The EXP RX port receives an optical signal from another 32WSS module in the same network element.
- EXP TX port: The EXP TX port sends an optical signal to the other 32WSS module within the network element.
- COM TX port: The COM TX port sends an aggregate optical signal to a booster card (for example, OPT_BST) for transmission outside of the network element.
- COM RX port: The COM RX port receives the optical signal from a pre-amplifier and sends it to the optical splitter.
- DROP TX port: The DROP TX port sends the split off optical signal that contains drop channels to the 32DMX card where the channels are further processed and dropped.

A terminal site can be configured using only a 32WSS card and a 32DMX card plugged into the east or west side of the shelf.

14.7.6.1 Faceplate

Figure 14-47 shows the 32WSS module front panel and identifies the traffic flow through the ports.

Figure 14-47 32WSS Faceplate and Ports

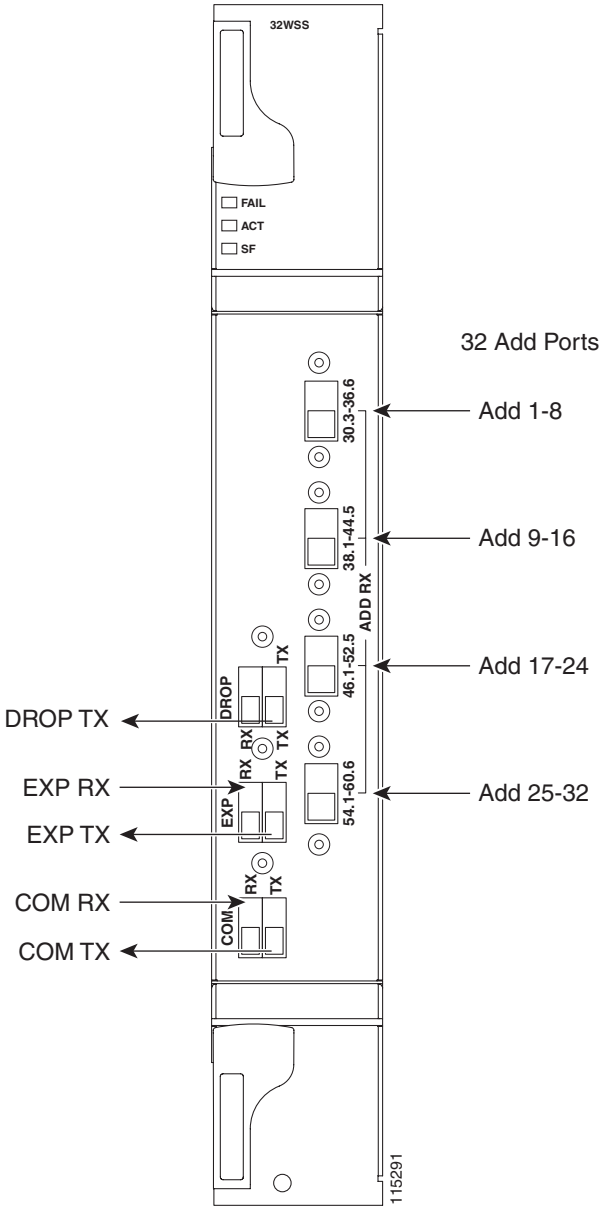

14.7.6.2 Block Diagrams

Figure 14-48 provides a high-level functional block diagram of the 32WSS card.

Figure 14-48 32WSS Block Diagram

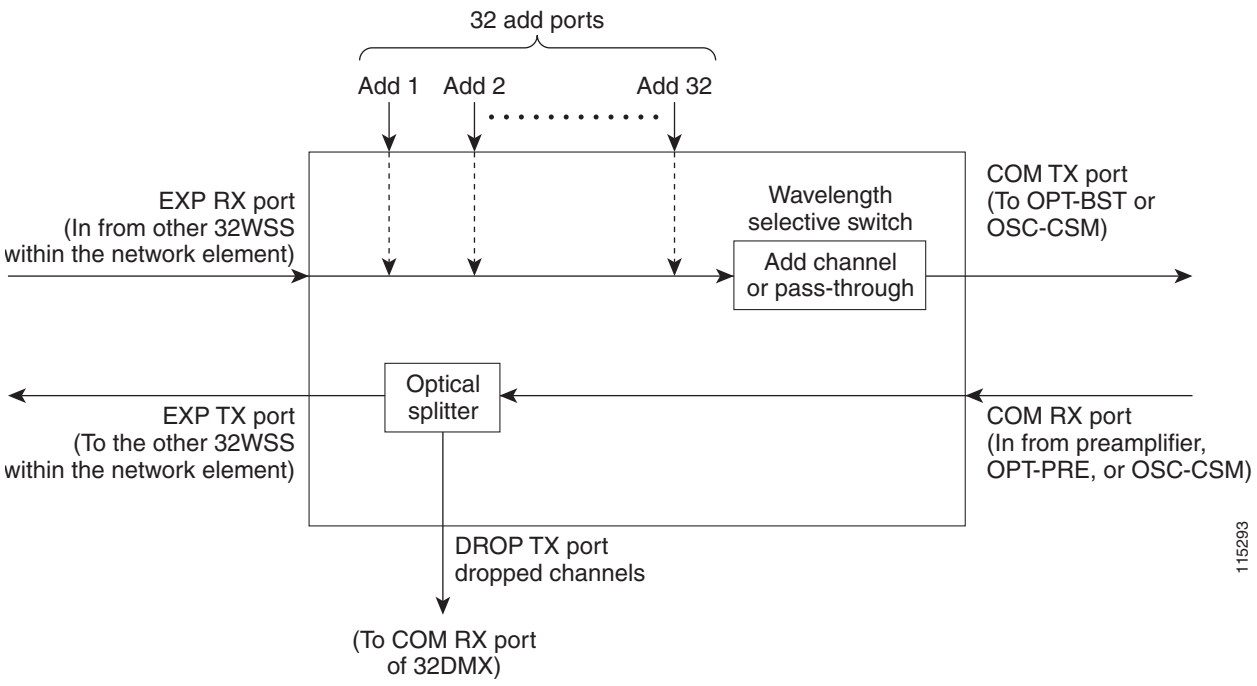

Aggregate optical signals that enter the EXP RX and COM RX port are processed in two ways. The optical processing stages are shown in Figure 14-49, which provides a detailed optical functional diagram of the 32WSS card.

Figure 14-49 32WSS Optical Block Diagram

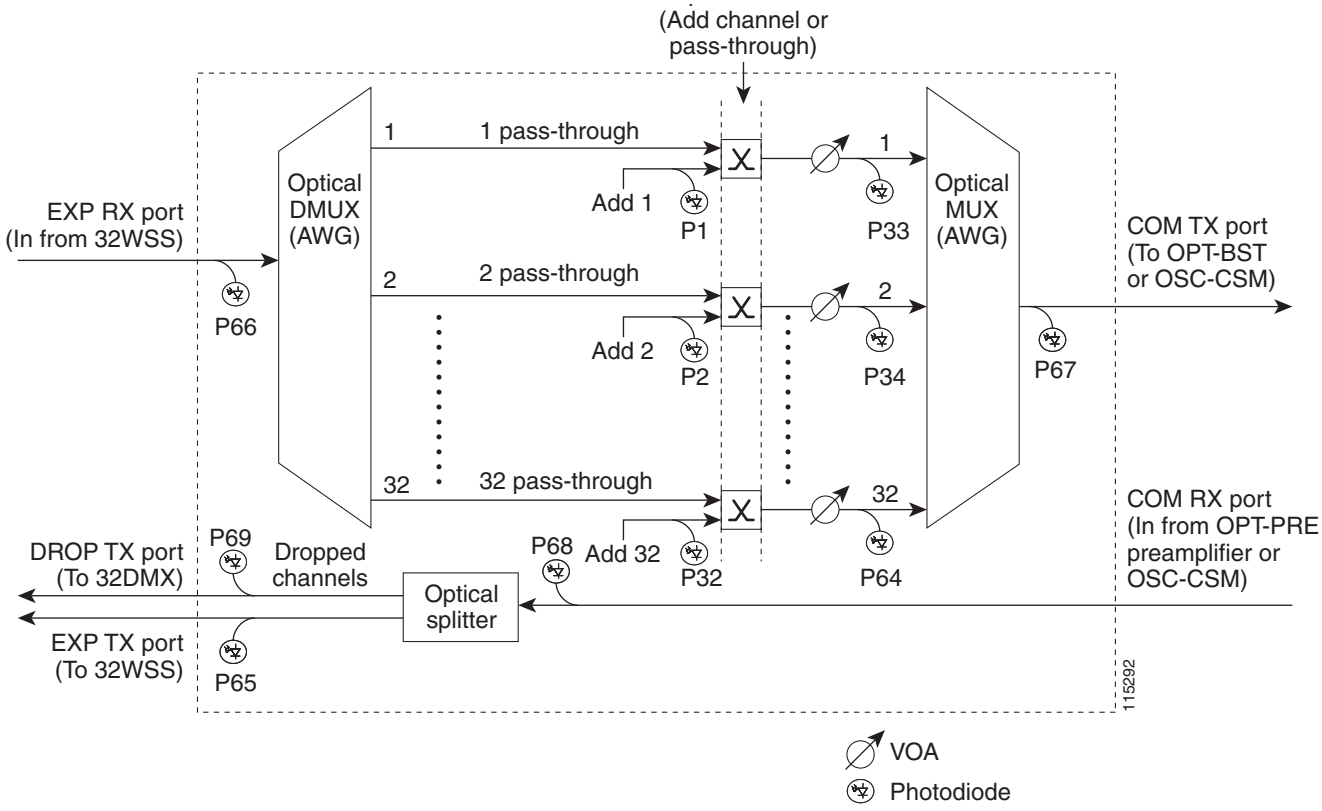

The operation of the EX PORT and COM PORT is as follows:

- EXP RX Port Add Channel/Pass-through Processing

  The incoming optical signal is received at the EXP RX port from the other 32WSS module within the network element. The incoming aggregate optical signal is demultiplexed into its 32 individual wavelength components, or channels. Then each channel is individually processed by the optical switch, which does add/pass-through processing. Under software control, the switch either selects the optical channel coming in from the demultiplexer (the pass-through channel) or it selects the external ADD channel. If the ADD port channel is selected, the optical signal coming from the demultiplexer is blocked, and the ADD channel is transmitted in its place.

  After the optical switch stage, all of the channels are multiplexed together into an aggregate optical signal, which is sent out on the COM TX port. The output is typically connected to an OPT-BST (in the event a booster amplifier is needed) or to an OSC-CSM (if no amplification is needed).

- COM RX Port Optical Splitter Processing

  The incoming optical signal received at the COM RX port and is applied to the optical splitter within the 32WSS. Channels that are designated to be dropped are diverted optically to the DROP TX port by the splitter. The DROP TX port on the 32WSS is typically connected to the COM RX port of the 32DMX where the drop channels are dropped. Channels that are not dropped pass through the optical splitter and flow out of the EXP TX port of the 32WSS. This optical signal is typically connected to the other 32WSS module within the network element.

14.7.6.3 Power Monitoring

Physical photodiodes P1 through P69 monitor the power for the 32WSS card. The returned power level values are calibrated to the ports as shown in Table 14-46.

Table 14-46 32WSS Port Calibration

Photodiode	CTC "Type" Name	Calibrated to Port
P1 - P32	ADD (Power)	COM TX
	ADD (Power ADD)	ADD Channel RX
P33 - P64	PASS THROUGH	COM TX
P65	OUT EXP	EXP TX
P66	IN EXP	EXP RX
P67	OUT COM	COM TX
P68	IN COM	COM RX
P69	DROP	DROP TX

14.7.6.4 32WSS Card-Level Indicators

Table 14-47 describes the three card-level LED indicators on the 32WSS card.

Table 14-47 32WSS Card-Level Indicators

Card-Level Indicators	Description
Red FAIL LED	The red FAIL LED indicates that the card's processor is not ready or that there is an internal hardware failure. Replace the card if the red FAIL LED persists.
Green ACT LED	The green ACT LED indicates that the 32WSS card is carrying traffic or is traffic-ready.
Amber SF LED	The amber SF LED indicates a signal failure on one or more of the card's ports. The amber SF LED also illuminates when the transmit and receive fibers are incorrectly connected. When the fibers are properly connected, the light turns off.

14.7.6.5 32WSS Port-Level Indicators

You can find the status of the 32WSS card's ports using the LCD screen on the ONS 15454 fan-tray assembly. Use the LCD to view the status of any port or card slot; the screen displays the number and severity of alarms for a given port or slot. The 32WSS card has five sets of ports located on the faceplate. COM RX is the line input, COM TX is the line output, EXP RX is the port where a channel can be added or passed through, EXP TX is the port that passes through the channels that are not dropped, and DROP TX is the port for the dropped channels. The xx.x-yy.y TX ports represent the four groups of eight channels ranging from xx.x wavelength to yy.y wavelength according to the channel plan.

14.8 Transponder and Muxponder Cards

This section describes the transponder and muxponder cards.

14.8.1 TXP_MR_10G Card

Warning **High-performance devices on this card can get hot during operation. To remove the card, hold it by the faceplate and bottom edge. Allow the card to cool before touching any other part of it or before placing it in an antistatic bag.**

Warning **Do not reach into a vacant slot or chassis while you install or remove a module or a fan. Exposed circuitry could constitute an energy hazard.**

The 10-Gbps Transponder–100-GHz–Tunable xx.xx-xx.xx card (TXP_MR_10G) processes one 10-Gbps signal (client side) into one 10-Gbps, 100-GHz DWDM signal (trunk side). It provides one 10-Gbps port per card that can be provisioned for an STM64/OC-192 short reach (1310nm) signal, compliant with ITU-T G.707, G.709, ITU-T G.691, Telcordia GR-253-CORE, or to 10 GE BASE-LR, compliant to IEEE 802.3

The TXP_MR_10G card is tunable over two neighboring wavelengths in the 1550-nm, ITU 100-GHz range. It is available in 16 different versions, covering 32 different wavelengths in the 1550-nm range.

Note ITU-T G.709 specifies a form of FEC that uses a “wrapper” approach. The digital wrapper lets you transparently take in a signal on the client side, wrap a frame around it and restore it to its original form. FEC enables longer fiber links because errors caused by the optical signal degrading with distance are corrected.

The trunk port operates at 9.95328 Gbps (or 10.70923 Gbps with ITU-T G.709 Digital Wrapper/FEC) and at 10.3125 Gbps (or 11.095 Gbps with ITU-T G.709 Digital Wrapper/FEC) over unamplified distances up to 80 km(50 miles) with different types of fiber such as C-SMF or dispersion compensated fiber limited by loss and/or dispersion.

Caution Because the transponder has no capability to look into the payload and detect circuits, a TXP_MR_10G card does not display circuits under card view.

For the TXP_MR_10G card, protection is done using Y-cable protection. Two TXP_MR_10G cards can be joined in a Y-cable protection group. In Y-cable protection, the client ports of the two cards are joined by Y-cables. A single incoming Rx client signal is injected into the Rx Y-cable port and is split between the two TXP_MR_10G cards (connected to the Rx client ports) in the protection group. The transmit (Tx) client signals from the two protection group TXP_MR_10G cards are connected to the correspondent ports of the Tx Y-cable. Only the Tx client port of the Active TXP_MR_10G card is turned on and transmits the signal towards the receiving client equipment. See the “14.9 Transponder and Muxponder Protection” section on page 14-119 for more information.

Note If you create a GCC on either card of the protection group, the trunk (span) port stays permanently active, regardless of the switch state. When you provision a GCC, you are provisioning unprotected overhead bytes. The GCC is not protected by the protect group.

14.8.1.1 Faceplate and Block Diagram

Figure 14-51 shows the TXP_MR_10G faceplate and block diagram.

Figure 14-50 TXP_MR_10G Faceplate and Block Diagram

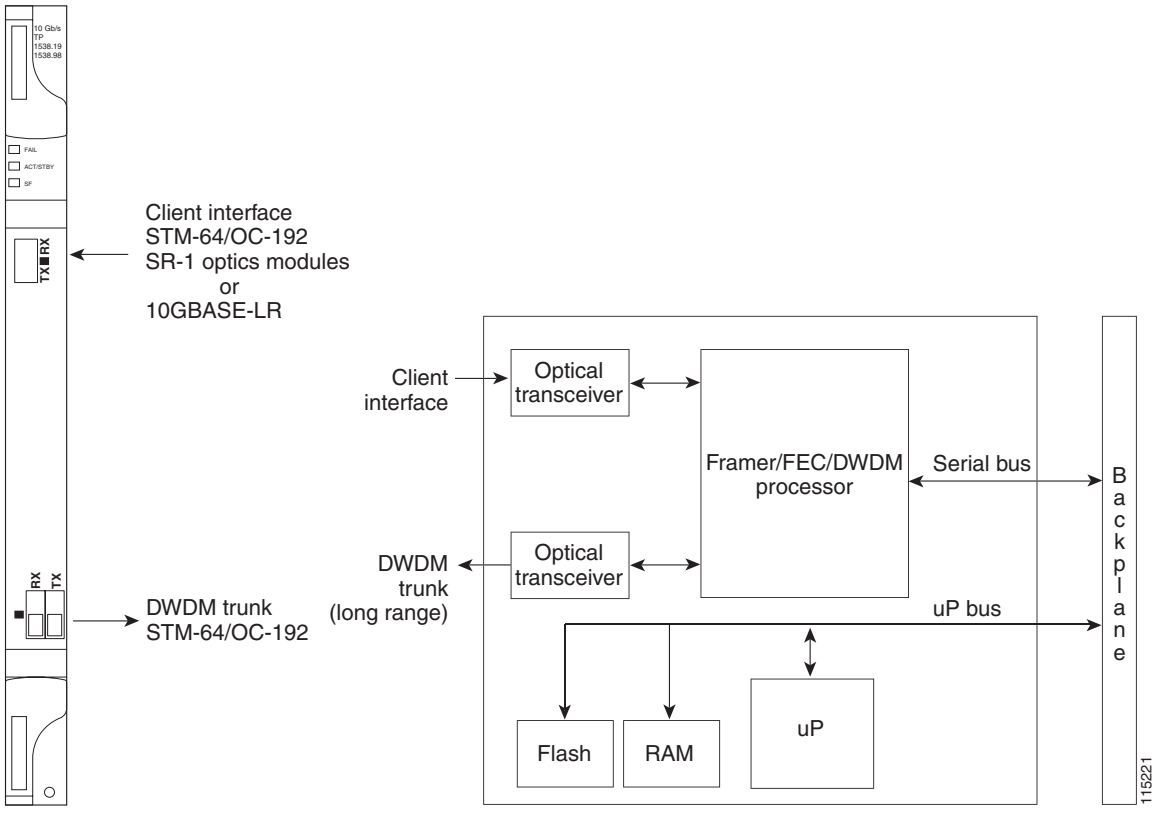

Caution You must use a 15-dB fiber attenuator (10 to 20 dB) when working with the TXP_MR_10G card in a loopback on the trunk port. Do not use direct fiber loopbacks with the TXP_MR_10G card. Using direct fiber loopbacks causes irreparable damage to the TXP_MR_10G card.

You can install TXP_MR_10G cards in Slots 1 to 6 and 12 to 17. You can provision this card in a linear configuration. TXP_MR_10G cards cannot be provisioned as a BLSR, a path protection, or a regenerator. They can be used in the middle of BLSR or 1+1 spans. They can only be used in the middle of BLSR and 1+1 spans when the card is configured for transparent termination mode.

The TXP_MR_10G port features a 1550-nm laser for the trunk port and a 1310-nm laser for the for the client port and contains two transmit and receive connector pairs (labeled) on the card faceplate.

The TXP_MR_10G card detects SF, LOS, or LOF conditions on the optical facility. Refer to the *Cisco ONS 15454 SONET and DWDM Troubleshooting Guide* for a description of these conditions. The card also counts section and line bit interleaved parity (BIP) errors from B1 and B2 byte registers in the section and line overhead.

14.8.1.2 TXP_MR_10G Card-Level Indicators

Table 14-50 lists the three card-level LEDs on the TXP_MR_10G card.

Table 14-48 TXP_MR_10G Card-Level Indicators

Card-Level LED	Description
FAIL LED (Red)	Red indicates that the card's processor is not ready. This LED is on during reset. The FAIL LED flashes during the boot process. Replace the card if the red FAIL LED persists.
ACT/STBY LED **Green (Active)** **Amber (Standby)**	Green indicates that the card is operational (one or both ports active) and ready to carry traffic. Amber indicates that the card is operational and in standby (protect) mode.
SF LED (Amber)	Amber indicates a signal failure or condition such as LOS, LOF, or high BERs on one or more of the card's ports. The amber SF LED is also illuminated if the transmit and receive fibers are incorrectly connected. If the fibers are properly connected and the link is working, the LED turns off.

14.8.1.3 TXP_MR_10G Port-Level Indicators

Table 14-51 lists the four port-level LEDs in the TXP_MR_10G card.

Table 14-49 TXP_MR_10G Port-Level Indicators

Port-Level LED	Description
Green Client LED	The green Client LED indicates that the client port is in service and that it is receiving a recognized signal.
Green DWDM LED	The green DWDM LED indicates that the DWDM port is in service and that it is receiving a recognized signal.
Green Wavelength 1 LED	Each port supports two wavelengths on the DWDM side. Each wavelength LED matches one of the wavelengths. This LED indicates that the card is configured for Wavelength 1.
Green Wavelength 2 LED	Each port supports two wavelengths on the DWDM side. Each wavelength LED matches one of the wavelengths. This LED indicates that the card is configured for Wavelength 2.

14.8.2 TXP_MR_10E Card

Warning **High-performance devices on this card can get hot during operation. To remove the card, hold it by the faceplate and bottom edge. Allow the card to cool before touching any other part of it or before placing it in an antistatic bag.**

Warning **Do not reach into a vacant slot or chassis while you install or remove a module or a fan. Exposed circuitry could constitute an energy hazard.**

The 10-Gbps Transponder–100-GHz–Tunable xx.xx-xx.xx (TXP_MR_10E) card is a multirate transponder for the ONS 15454 platform. The card is fully backward compatible with the TXT_MR_10G card. It processes one 10-Gbps signal (client side) into one 10-Gbps, 100-GHz DWDM signal (trunk side) that is tunable on four wavelength channels (ITU-T 100-GHz grid).

The TXP_MR_10E card can be used in any of the twelve I/O slots in the ONS 15454, including both high-speed and multirate ports (Slots 1 to 6 and Slots 12 to 17 can be used).

You can provision this card in a linear configuration, or as a BLSR, a Path Protection or a regenerator. The card can be used in the middle of BLSR or 1+1 spans when the card is configured for transparent termination mode.

The TXP_MR_10E port features a 1550-nm laser for the trunk port and a ONS-XC-10G-S1 XFP module for the client port and contains two transmit and receive connector pairs (labeled) on the card faceplate.

The TXP_MR_10E card detects SF, LOS, or LOF conditions on the optical facility. Refer to the *Cisco ONS 15454 SONET and DWDM Troubleshooting Guide* for a description of these conditions. The card also counts section and line BIP errors from the B1 and B2 byte registers in the section and line overhead.

14.8.2.1 Key Features

The key features of the TXP_MR_10G card are:

- A tri-rate XFP client interface
  - OC-192 (SR1)
  - 10GE (10GBASE-LR)
  - 10G-FC (1200-SM-LL-L)
- OC-192 to G.709 OTU2 provisionable synchronous and asynchronous mapping

14.8.2.2 Faceplate and Block Diagram

Figure 14-51 shows the TXP_MR_10E faceplate and block diagram.

Figure 14-51 TXP_MR_10E Faceplate and Block Diagram

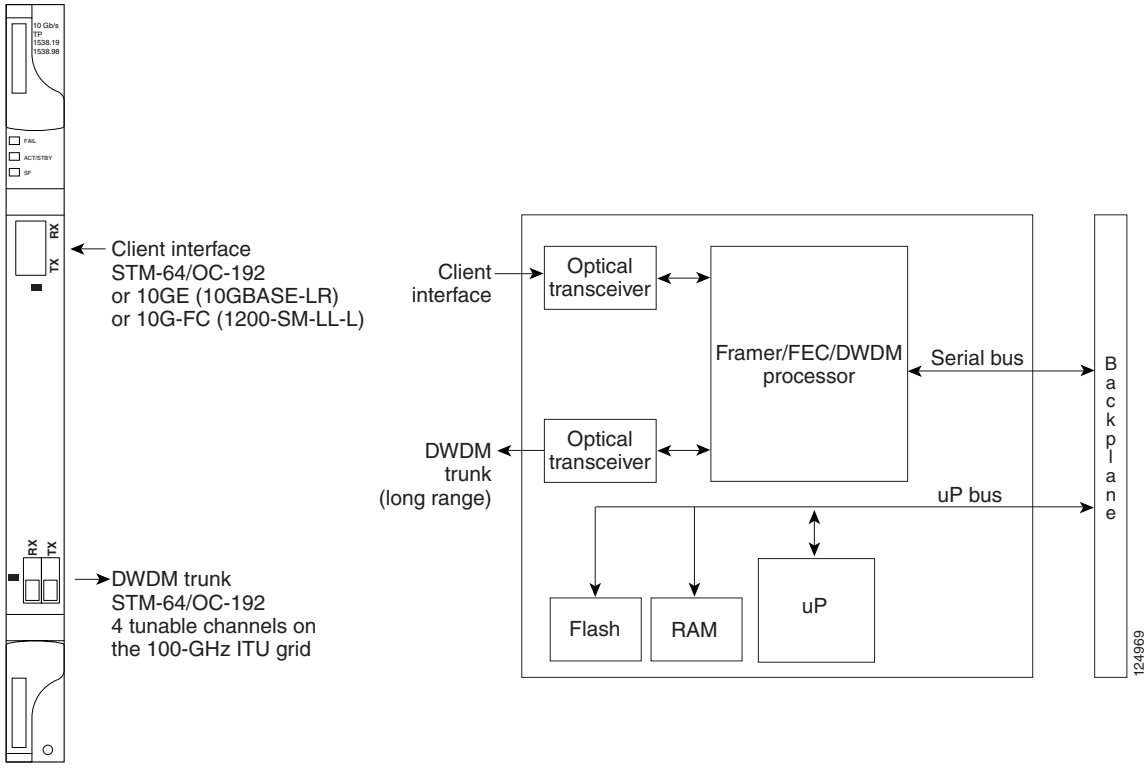

Caution You must use a 15-dB fiber attenuator (10 to 20 dB) when working with the TXP_MR_10E card in a loopback on the trunk port. Do not use direct fiber loopbacks with the TXP_MR_10E card. Using direct fiber loopbacks causes irreparable damage to the TXP_MR_10E card.

14.8.2.3 Client Interface

The client interface is implemented by an on-board XFP module, a tri-rate transponder that provides a single port that can be configured in the field to support STM-64/OC-192 (with an SR-1 optics module that plugs into the XFP module), 10GE (10GBASE-LR), or 10G FC protocols. The XFP module supports 10 GE LAN PHY, 10 GE WAN PHY, STM-64, and OC-192 client signals.

Two types of pluggable client-side optics modules are available for the XFP module on the TXP_MR_10E card: an OC-192 SR-1/I-64.2 interface (ITU-T G.691) or an S-64.2 optical interface (ITU-T G.691). The SR-1 is a 1310-nm optical interface that utilizes LC connectors. SR-1 is typically used in short-reach intra-office applications with ranges typically up to 7 km.

14.8.2.4 DWDM Trunk Interface

On the trunk side, the TXP_MR_10E card provides a 10 Gbps STM-64/OC-192 interface. There are four tunable channels available in the 1550-nm band on the 100-GHz ITU grid for the DWDM interface. The TXP_MR_10E card provides 3R transponder functionality for this 10 Gbps trunk interface. Therefore, the card is suited for use in long range amplified systems. The DWDM interface is complaint with ITU-T G.707, ITU-T G.709, and Telcordia GR-253-CORE standards.

The DWDM trunk port operates at a rate that is dependent on the input signal and the presence or absence of the ITU-T G.709 Digital Wrapper/FEC (see bullet list below). The maximum system reach in filterless applications without the use of optical amplification or regenerators is nominally rated at 23 dB over C-SMF fiber. This rating is not a product specification, but is given for informational purposes, and it is subject to change.

The possible trunk rates are:

- OC192 (9.95328 Gbps)
- OTU2 (10.70923 Gbps)
- 10GE (10.3125 Gbps) or 10GE into OTU2 (non-standard 11.0957 Gbps)
- 10G FC (10.51875 Gbps) or 10G FC into OTU2 (non-standard 11.31764 Gbps).

14.8.2.5 Y-Cable Protection

The TXP_MR_10E card supports Y-cable protection, which provides transponder equipment protection without client terminal equipment interface protection. A single client interface can be split between two transponder cards using a Y-protection device.

With Y-cable protection, two TXP_MR_10E transponder cards can be joined in a Y-cable protection group. In Y-cable protection, the client ports of the two cards are joined by Y-cables. An incoming client signal is injected into the Rx Y-cable port and is split between the two TXP_MR_10E cards (connected to Rx client ports) in the protection group. The Tx client signals from the two protection group TXP_MR_10E cards are connected to the correspondent ports of the Tx Y-cable. Only the Tx client port of the active TXP_MR_10E card is turned on and transmits the signal towards the receiving client equipment. See the “14.9.1 Y-Cable Protection” section on page 14-119 for more details.

Note If you create a GCC using a digital wrapper and apply it to either card of the Y-cable protect group, the DWDM trunk (span) port stays permanently active, regardless of the switch’s state. When you provision a GCC, you are provisioning unprotected overhead (OH) bytes. The GCC is not protected by the protection group.

14.8.2.6 Enhanced FEC (E-FEC) Feature

A key feature of the TXP_MR_10E is the availability to configure the Forward Error correction in three modes: NO FEC, FEC, and E-FEC. The output bit rate are always 10.7092 Gbps as defined in G.709, but the error coding performance can be provisioned as follows:

- NO FEC: no forward error correction
- FEC: standard G.975 Reed-Solomon algorithm

- E-FEC: standard G.975.1 two orthogonally concatenated Bose-Chaudhuri-Hochquenghem (BCH) super FEC code. This FEC scheme contains three parameterizations of the same scheme of two orthogonally interleaved block codes (BCH). The constructed code is decoded iteratively to achieve the expected performance.

14.8.2.7 FEC and E-FEC Modes

As client side traffic passes through the TXP_MR_10E card, it can be digitally wrapped using FEC mode error correction or E-FEC mode error correction (or no error correction at all). The FEC mode setting provides a lower level of error detection and correction than the E-FEC mode setting of the card. As a result, using E-FEC mode allows higher sensitivity (lower OSNR) with a lower bit error rate than FEC mode. E-FEC enables longer distance trunk-side transmission than with FEC.

The E-FEC feature is one of three basic modes of FEC operation. FEC can be turned off, FEC can be turned on, or E-FEC can be turned on to provide greater range and lower bit error rate. The default mode is FEC on and E-FEC off. E-FEC is provisioned using CTC.

Caution Because the transponder has no visibility into the data payload and detect circuits, a TXP_MR_10E card does not display circuits under the card view.

14.8.2.8 Client-to-Trunk Mapping

A key feature of the TXP_MR_10E card is the ability to perform ODU2-to-OCh mapping, which allows operators to provision data payloads in a standard way across 10-Gbps optical links.

Digital wrappers that define client side interfaces are called ODU2 (Optical Data Channel Unit 2) entities in the ITU-T G.709. Digital wrappers that define trunk side interfaces are called OCh (Optical Channels) in ITU-T G.709. ODU2 digital wrappers can include Generalized Multiprotocol Label Switching (G-MPLS) signaling extensions to ITU-T G.709 (such as Least Significant Part (LSP) and Generalized Payload Identifier (G-PID) values) to define client interfaces and payload protocols.

14.8.2.9 TXP_MR_10E Card-Level Indicators

Table 14-50 lists the three card-level LEDs on the TXP_MR_10E card.

Table 14-50 TXP_MR_10E Card-Level Indicators

Card-Level LED	Description
Red FAIL LED	The red FAIL LED indicates that the card's processor is not ready. This LED is on during reset. The FAIL LED flashes during the boot process. Replace the card if the red FAIL LED persists.
ACT/STBY LED **Green (Active)** **Amber (Standby)**	If the ACT/STBY LED is green, the card is operational (one or both ports active) and ready to carry traffic. If the ACT/STBY LED is amber, the card is operational and in standby (protect) mode.
Amber SF LED	The amber SF LED indicates a signal failure or condition such as LOS, LOF, or high BERs on one or more of the card's ports. The amber SF LED is also on if the transmit and receive fibers are incorrectly connected. If the fibers are properly connected and the link is working, the light turns off.

14.8.2.10 TXP_MR_10E Port-Level Indicators

Table 14-51 lists the four port-level LEDs in the TXP_MR_10E card.

Table 14-51 TXP_MR_10E Port-Level Indicators

Port-Level LED	Description
Green Client LED	The green Client LED indicates that the client port is in service and that it is receiving a recognized signal.
Green DWDM LED	The green DWDM LED indicates that the DWDM port is in service and that it is receiving a recognized signal.

14.8.3 TXP_MR_2.5G and TXPP_MR_2.5G Cards

The 2.5-Gbps Multirate Transponder–100-GHz–Tunable xx.xx-xx.xx (TXP_MR_2.5G) card processes one 8-Mbps to 2.488-Gbps signal (client side) into one 8-Mbps to 2.5-Gbps, 100-GHz DWDM signal (trunk side). It provides one long-reach STM-16/OC-48 port per card, compliant with ITU-T G.707, ITU-T G.709, ITU-T G.957, and Telcordia GR-253-CORE.

The 2.5-Gbps Multirate Transponder–Protected–100-GHz–Tunable xx.xx-xx.xx (TXPP_MR_2.5G) card processes one 8-Mbps to 2.488-Gbps signal (client side) into two 8-Mbps to 2.5-Gbps, 100-GHz DWDM signals (trunk side). It provides two long-reach STM-16/OC-48 ports per card, compliant with ITU-T G.707, ITU-T G.957, and Telcordia GR-253-CORE.

The TXP_MR_2.5G and TXPP_MR_2.5G cards are tunable over four wavelengths in the 1550-nm, ITU 100-GHz range. They are available in eight versions, covering 32 different wavelengths in the 1550-nm range.

Note ITU-T G.709 specifies a form of FEC that uses a “wrapper” approach. The digital wrapper lets you transparently take in a signal on the client side, wrap a frame around it, and restore it to its original form. FEC enables longer fiber links because errors caused by the optical signal degrading with distance are corrected.

The trunk/line port operates at up to 2.488 Gbps (or up to 2.66 Gbps with ITU-T G.709 Digital Wrapper/FEC) over unamplified distances up to 360 km (223.7 miles) with different types of fiber such as C-SMF or higher if dispersion compensation is used.

Caution Because the transponder has no capability to look into the payload and detect circuits, a TXP_MR_2.5G or TXPP_MR_2.5G card does not display circuits under card view.

For the TXP_MR_2.5G card, protection is done using Y-cable protection. Two TXP_MR_2.5G cards can be joined in a Y-cable protection group. In Y-cable protection, the client ports of the two cards are joined by Y-cables. A single incoming Rx client signal is injected into the Rx Y-cable port and is split between the two TXP_MR_2.5G cards (connected to the Rx client ports) in the protection group. The transmit (Tx) client signals from the two protection group TXP_MR_2.5G cards are connected to the correspondent ports of the Tx Y-cable. Only the Tx client port of the Active TXP_MR_2.5G card is turned on and transmits the signal towards the receiving client equipment. See the “14.9 Transponder and Muxponder Protection” section on page 14-119 for more information.

Note If you create a GCC on either card of the protect group, the trunk (span) port stays permanently active, regardless of the switch state. When you provision a GCC, you are provisioning unprotected overhead bytes. The GCC is not protected by the protect group.

For the TXPP_MR_2.5G card, protection is done using splitter protection. In splitter protection, the single client signal is injected into the client Rx port. It is then split into two separate signals on the two trunk Tx ports. The two signals are transmitted over diverse paths. The far-end TXPP_MR_2.5G card chooses one of the two trunk Rx port signals and injects it into the Tx client port. The TXPP_MR_2.5G card switches the selected trunk Rx port signal in case of failure. See the "14.9 Transponder and Muxponder Protection" section on page 14-119 for more details.

The TXP_MR_2.5G and TXPP_MR_2.5G cards support 2R and 3R modes of operation where the client signal is mapped into a ITU-T G.709 frame. The mapping function is simply done by placing a digital wrapper around the client signal. Only OC-48/STM-16 client signals are fully ITU-T G.709 compliant, and the output bit rate depends on the input client signal. Table 14-52 shows the possible combinations of client interfaces, input bit rates, 2R and 3R modes, and ITU-T G.709 monitoring.

Table 14-52 2R and 3R Mode and ITU-T G.709 Compliance by Client Interface

Client Interface	Input Bit Rate	3R vs. 2R	ITU-T G.709
OC-48/STM-16	2.488 Gbps	3R	On or Off
DV-6000	2.38 Gbps	2R	—
2 Gigabit Fibre Channel (2G-FC)/FICON	2.125 Gbps	3R[1]	On or Off
High definition television (HDTV)	1.48 Gbps	2R	—
Gigabit Ethernet (GE)	1.25 Gbps	3R	On or Off
1 Gigabit Fibre Channel (1G-FC)/FICON	1.06 Gbps	3R	On or Off
OC-12/STM-4	622 Mbps	3R	On or Off
OC-3/STM-1	155 Mbps	3R	On or Off
ESCON	200 Mbps	2R	—
SDI/D1 video	270 Mbps	2R	—
ISC-1 Compact	1.06 Gbps	3R	Off
ISC-3	1.06 or 2.125 Gbps	2R	—
ETR/CLO	16 Mbps	2R	—

1. No monitoring

The output bit rate is calculated for the trunk bit rate by using the 255/238 ratio as specified in ITU-T G.709 for OTU1. Table 14-53 lists the calculated trunk bit rates for the client interfaces with ITU-T G.709 enabled.

Table 14-53 Trunk Bit Rates With ITU-T G.709 Enabled

Client Interface	ITU-T G.709 Disabled	ITU-T G.709 Enabled
OC-48/STM-16	2.488 Gbps	2.66 Gbps
2G-FC	2.125 Gbps	2.27 Gbps

Table 14-53 Trunk Bit Rates With ITU-T G.709 Enabled (continued)

Client Interface	ITU-T G.709 Disabled	ITU-T G.709 Enabled
GE	1.25 Gbps	1.34 Gbps
1G-FC	1.06 Gbps	1.14 Gbps
OC-12/STM-3	622 Mbps	666.43 Mbps
OC-3/STM-1	155 Mbps	166.07 Mbps

For 2R operation mode, the TXP_MR_2.5G and TXPP_MR_2.5G cards have the ability to pass data through transparently from client side interfaces to a trunk side interface, which resides on an ITU grid. The data might vary at any bit rate from 200-Mbps up to 2.38-Gbps, including Enterprise System Connection (ESCON) and video signals. In this pass-through mode, no performance monitoring (PM) or digital wrapping of the incoming signal is provided, except for the usual PM outputs from the Small Form-factor Pluggable (SFPs). Similarly, this card has the ability to pass data through transparently from the trunk side interfaces to the client side interfaces with bit rates varying from 200-Mbps up to 2.38-Gbps. Again, no performance monitoring or digital wrapping of received signals is available in this pass-through mode.

For 3R operation mode, the TXP_MR_2.5G and TXPP_MR_2.5G cards apply a digital wrapper to the incoming client interface signals (OC-N, 1G-FC, 2G-FC, GE). Performance monitoring is available on all of these signals except for 2G-FC, and varies depending upon the type of signal. For client inputs other than OC-48/STM-16, a digital wrapper might be applied but the resulting signal is not ITU-T G.709 compliant. The card applies a digital wrapper that is scaled to the frequency of the input signal.

The TXP_MR_2.5G and TXPP_MR_2.5G card has the ability to take digitally wrapped signals in from the trunk interface, remove the digital wrapper, and send the unwrapped data through to the client interface. Performance monitoring of the ITU-T G.709 OH and SONET/SDH OH is implemented.

14.8.3.1 Faceplate

Figure 14-52 shows the TXP_MR_2.5G and TXPP_MR_2.5G faceplates.

Figure 14-52 TXP_MR_2.5G and TXPP_MR_2.5G Faceplates

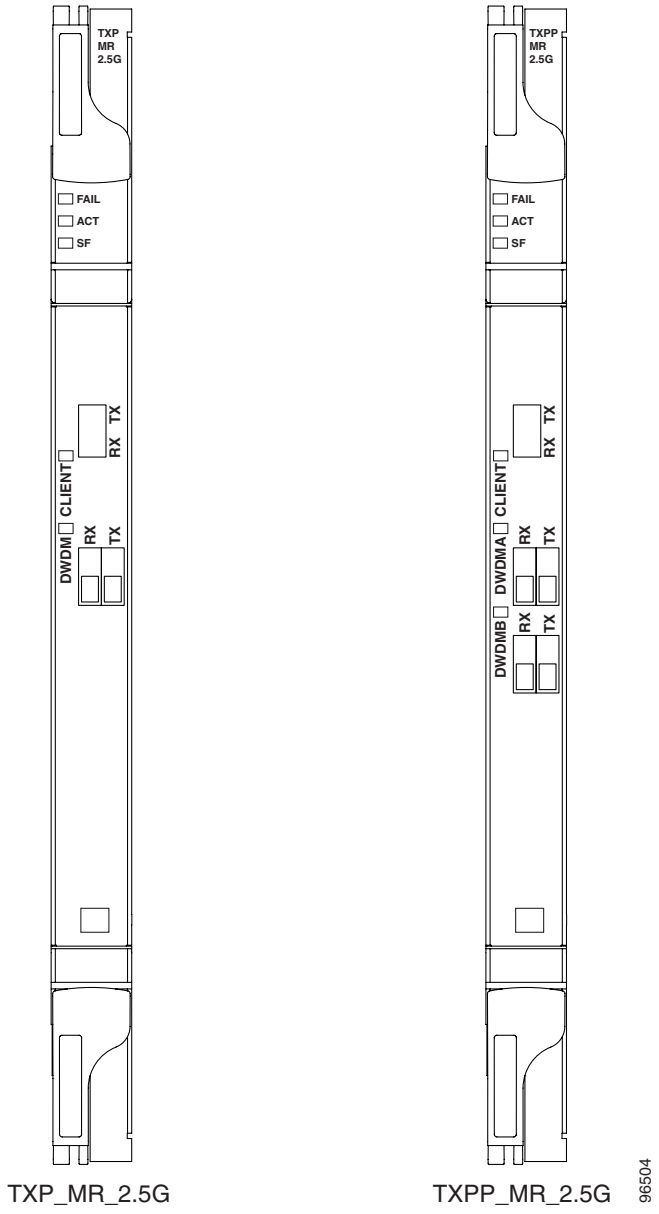

14.8.3.2 Block Diagram

Figure 14-53 shows a block diagram of the TXP_MR_2.5G and TXPP_MR_2.5G cards.

Figure 14-53 TXP_MR_2.5G and TXPP_MR_2.5G Block Diagram

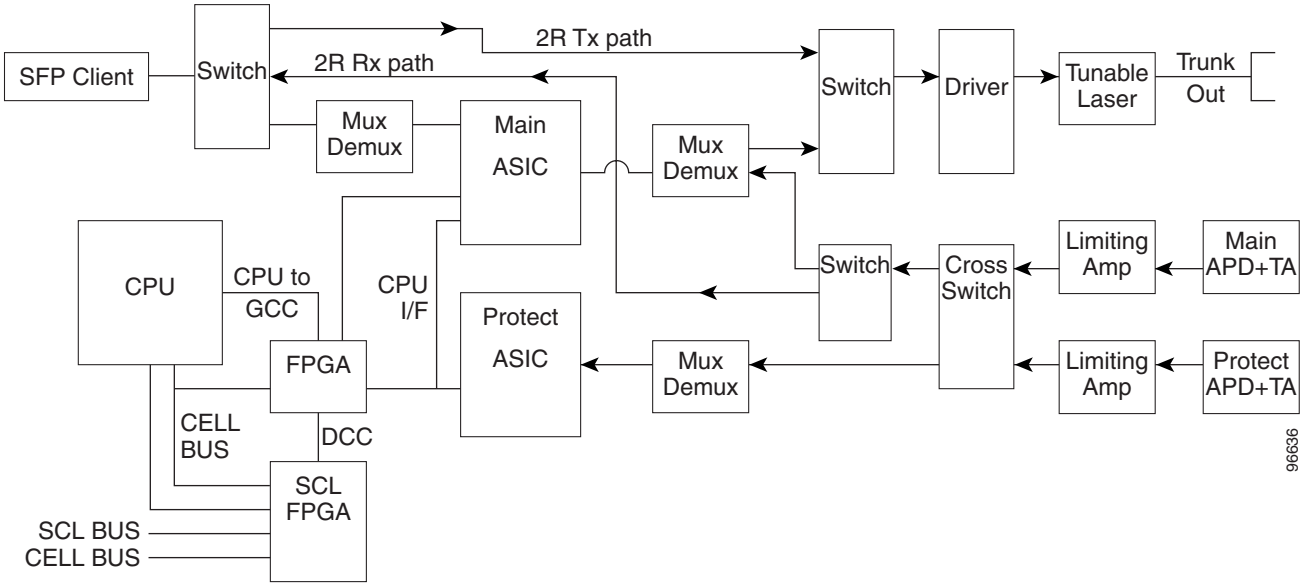

Caution You must use a 20-dB fiber attenuator (15 to 25 dB) when working with the TXP_MR_2.5G and TXPP_MR_2.5G cards in a loopback on the trunk port. Do not use direct fiber loopbacks with the TXP_MR_2.5G and TXPP_MR_2.5G cards. Using direct fiber loopbacks causes irreparable damage to the TXP_MR_2.5G and TXPP_MR_2.5G cards.

You can install TXP_MR_2.5G and TXPP_MR_2.5G cards in Slots 1 to 6 and 12 to 17. You can provision this card in a linear configuration. TXP_MR_10G and TXPP_MR_2.5G cards cannot be provisioned as a BLSR, a path protection, or a regenerator. They can be used in the middle of BLSR or 1+1 spans. They can only be used in the middle of BLSR and 1+1 spans when the card is configured for transparent termination mode.

The TXP_MR_2.5G card features a 1550-nm laser for the trunk/line port and a 1310-nm laser for the client port and contains two transmit and receive connector pairs (labeled) on the card faceplate. The card uses dual LC connectors for optical cable termination.

The TXPP_MR_2.5G card features a 1550-nm laser for the trunk/line port and a 1310-nm or 850-nm laser (depending on the SFP) for the client port and contains three transmit and receive connector pairs (labeled) on the card faceplate. The card uses dual LC connectors for optical cable termination.

The TXP_MR_2.5G and TXPP_MR_2.5G cards detect SF, LOS, or LOF conditions on the optical facility. Refer to the *Cisco ONS 15454 SONET and DWDM Troubleshooting Guide* for a description of these conditions. The card also counts section and line BIP errors from B1 and B2 byte registers in the section and line overhead.

14.8.3.3 TXP_MR_2.5G and TXPP_MR_2.5G Safety Labels

The TXP_MR_2.5G and TXPP_MR_2.5G cards have several safety labels that provide laser radiation and electrical shock warnings.

Figure 14-54 shows the laser radiation warning hazard level label. The faceplate of these cards are clearly labeled with warnings about the equipment radiation level. Personnel must understand all warning labels before working with these cards. The hazard level label warns the personnel against exposure to laser radiation of Class 1 limits calculated in accordance with IEC60825-1 Ed.1.2.

Figure 14-54 Laser Radiation Warning—Hazard Level Label

Figure 14-55 shows the laser source connector label. This label indicates a laser source at the optical connectors where it has been placed.

Figure 14-55 Laser Radiation Warning—Laser Source Connector Label

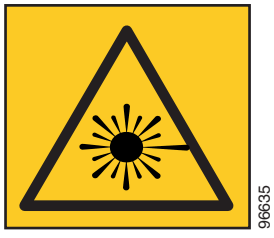

Figure 14-56 shows the FDA compliance label. This label shows the statement of compliance to FDA standards and that the hazard level classification is in accordance with IEC60825-1 Am.2 or Ed.1.2.

Figure 14-56 FDA Compliance Statement Label

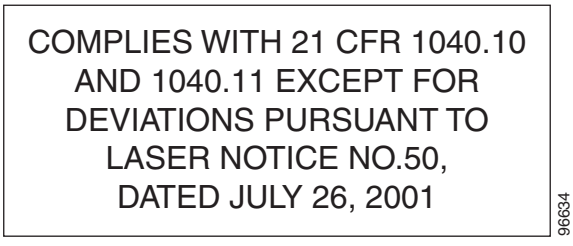

Figure 14-57 shows the electrical energy hazard label. This label alerts personnel to electrical hazards within the card. The potential of shock hazard exists when adjacent cards are removed during maintenance and touching exposed electrical circuitry on the card itself.

Figure 14-57 Electrical Energy Hazard Label

14.8.3.4 TXP_MR_2.5G and TXPP_MR_2.5G Card-Level Indicators

Table 14-54 lists the three card-level LEDs on the TXP_MR_2.5G and TXPP_MR_2.5G cards.

Table 14-54 TXP_MR_10G and TXPP_MR_2.5G Card-Level Indicators

Card-Level LED	Description
Red FAIL LED	The red FAIL LED indicates that the card's processor is not ready. This LED is on during reset. The FAIL LED flashes during the boot process. Replace the card if the red FAIL LED persists.
ACT/STBY LED **Green (Active)** **Amber (Standby)**	If the ACT/STBY LED is green, the card is operational (one or both ports active) and ready to carry traffic. If the ACT/STBY LED is amber, the card is operational and in standby (protect) mode.
Amber SF LED	The amber SF LED indicates a signal failure or condition such as LOS, LOF, or high BERs on one or more of the card's ports. The amber SF LED is also on if the transmit and receive fibers are incorrectly connected. If the fibers are properly connected and the link is working, the light turns off.

14.8.3.5 TXP_MR_2.5G and TXPP_MR_2.5G Port-Level Indicators

Table 14-55 lists the four port-level LEDs on the TXP_MR_2.5G and TXPP_MR_2.5G cards.

Table 14-55 TXP_MR_10G Port-Level Indicators

Port-Level LED	Description
Green Client LED	The green Client LED indicates that the client port is in service and that it is receiving a recognized signal.
Green DWDM LED	The green DWDM LED indicates that the DWDM port is in service and that it is receiving a recognized signal.
Green TX LED	The green TX LED indicates that indicated the DWDM port is in service and that it is currently transmitting a recognized signal.
Green RX LED	The green RX LED indicates that the indicated DWDM port is in service and that it is currently receiving a recognized signal.

14.8.4 MXP_2.5G_10G Card

Warning **High-performance devices on this card can get hot during operation. To remove the card, hold it by the faceplate and bottom edge. Allow the card to cool before touching any other part of it or before placing it in an antistatic bag.**

Warning **Do not reach into a vacant slot or chassis while you install or remove a module or a fan. Exposed circuitry could constitute an energy hazard.**

The 2.5-Gbps–10-Gbps Muxponder–100 GHz–Tunable xx.xx-xx.xx (MXP_2.5G_10G) card multiplexes/demultiplexes four 2.5-Gbps signals (client side) into one 10-Gbps, 100-GHz DWDM signal (trunk side). It provides one extended long-range STM-64/OC-192 port per card on the trunk side (compliant with ITU-T G.707, ITU-T G.709, ITU-T G.957, and Telcordia GR-253-CORE) and four intermediate- or short-range OC-48/STM-16 ports per card on the client side. The port operates at 9.95328 Gbps over unamplified distances up to 80 km (50 miles) with different types of fiber such as C-SMF or dispersion compensated fiber limited by loss and/or dispersion.

Client ports on the MXP_2.5G_10G card are also interoperable with OC-1 (STS-1) fiber optic signals defined in Telcordia GR.252-CORE. An OC-1 signal is the equivalent of one DS-3 channel transmitted across optical fiber. OC-1 is primarily used for trunk interfaces to phone switches in the United States. There is no SDH equivalent for OC-1.

The MXP_2.5G_10G card is tunable over two neighboring wavelengths in the 1550-nm, ITU 100-GHz range. It is available in four different versions, covering eight different wavelengths in the 1550-nm range.

Note ITU-T G.709 specifies a form of FEC that uses a “wrapper” approach. The digital wrapper lets you transparently take in a signal on the client side, wrap a frame around it and restore it to its original form. FEC enables longer fiber links because errors caused by the optical signal degrading with distance are corrected.

The port can also operate at 10.70923 Gbps in ITU-T G.709 Digital Wrapper/FEC mode.

Caution Because the transponder has no capability to look into the payload and detect circuits, an MXP_2.5G_10G card does not display circuits under card view.

14.8.4.1 Y-Cable Protection

For the MXP_2.5G_10G card, protection is done using Y-cable protection. Two MXP_2.5G_10G cards can be joined in a Y-cable protection group. In Y-cable protection, the client ports of the two cards are joined by Y-cables. A single Rx client signal is injected into the Rx Y-cable and is split between the two MXP_2.5G_10G cards in the protection group. The Tx client signals from the two protection group MXP_2.5G_10G cards are connected via the TX Y-cable with only the active card signal passing through as the single TX client signal. See the “14.9.1 Y-Cable Protection” section on page 14-119 for more details.

Note If you create a GCC on either card of the protect group, the trunk port stays permanently active, regardless of the switch state. When you provision a GCC, you are provisioning unprotected overhead bytes. The GCC is not protected by the protect group.

14.8.4.2 Faceplate

Figure 14-58 shows the MXP_2.5G_10G faceplate.

Figure 14-58 MXP_2.5G_10G Faceplate

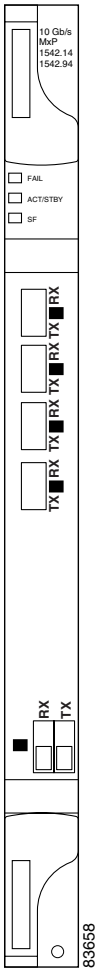

14.8.4.3 Block Diagram

Figure 14-59 shows a block diagram of the MXP_2.5G_10G card.

Figure 14-59 MXP_2.5G_10G Block Diagram

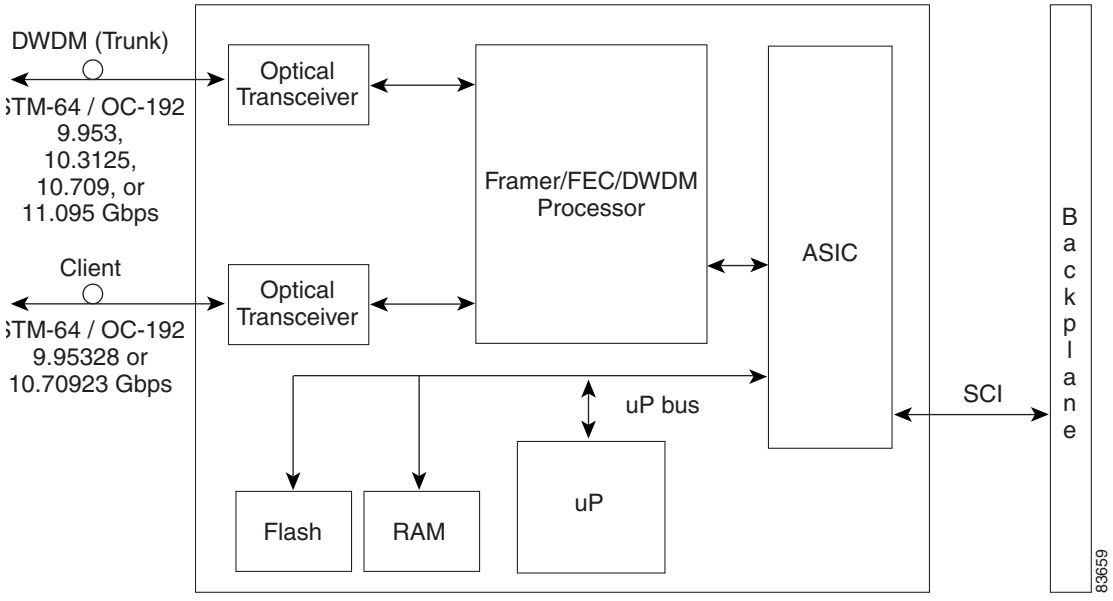

Caution You must use a 20-dB fiber attenuator (15 to 25 dB) when working with the MXP_2.5G_10G card in a loopback on the trunk port. Do not use direct fiber loopbacks with the MXP_2.5G_10G card. Using direct fiber loopbacks causes irreparable damage to the MXP_2.5G_10G card.

You can install MXP_2.5G_10G cards in Slots 1 to 6 and 12 to 17. You can provision this card in a linear configuration. MXP_2.5G_10G cards cannot be provisioned as a BLSR, a path protection, or a regenerator. They can be used in the middle of BLSR or 1+1 spans. They can only be used in the middle of BLSR and 1+1 spans when the card is configured for transparent termination mode.

The MXP_2.5G_10G port features a 1550-nm laser on the trunk port and four 1310-nm lasers on the client ports and contains five transmit and receive connector pairs (labeled) on the card faceplate. The card uses a dual LC connector on the trunk side and SFP connectors on the client side for optical cable termination.

The MXP_2.5G_10G card detects SF, LOS, or LOF conditions on the optical facility. Refer to the *Cisco ONS 15454 SONET and DWDM Troubleshooting Guide* for a description of these conditions. The card also counts section and line BIP errors from B1 and B2 byte registers in the section and line overhead.

14.8.4.4 Timing Synchronization

The MXP_2.5G_10G card is synchronized to the TCC2 clock during normal conditions and transmits the ITU-T G.709 frame using this clock. The TCC2 can operate from an external BITS clock, an internal Stratum 3 clock, or from clock recovered from one of the four valid client clocks. If clocks from both TCC2 cards are not available, the MXP_2.5G_10G card switches automatically (with errors, not hitless) to an internal 19.44 MHz clock that does not meet SONET clock requirements. This will result in a clock alarm.

14.8.4.5 MXP_2.5G_10G Card-Level Indicators

Table 14-59 describes the three card-level LEDs on the MXP_2.5G_10G card.

Table 14-56 MXP_2.5G_10G Card-Level Indicators

Card-Level LED	Description
Red FAIL LED	The red FAIL LED indicates that the card's processor is not ready. This LED is on during reset. The FAIL LED flashes during the boot process. Replace the card if the red FAIL LED persists.
ACT/STBY LED Green (Active) Amber (Standby)	If the ACT/STBY LED is green, the card is operational (one or more ports active) and ready to carry traffic. If the ACT/STBY LED is amber, the card is operational and in standby (protect) mode.
Amber SF LED	The amber SF LED indicates a signal failure or condition such as LOS, LOF, or high BERs on one or more of the card's ports. The amber SF LED is also on if the transmit and receive fibers are incorrectly connected. If the fibers are properly connected and the link is working, the light turns off.

14.8.4.6 MXP_2.5G_10G Port-Level Indicators

Table 14-60 describes the seven port-level LEDs on the MXP_2.5G_10G card.

Table 14-57 MXP_2.5G_10G Port-Level Indicators

Port-Level LED	Description
Green Client LED (four LEDs)	The green Client LED indicates that the client port is in service and that it is receiving a recognized signal. The card has four client ports, and so has four Client LEDs.
Green DWDM LED	The green DWDM LED indicates that the DWDM port is in service and that it is receiving a recognized signal.
Green Wavelength 1 LED	Each port supports two wavelengths on the DWDM side. Each wavelength LED matches one of the wavelengths. This LED indicates that the board is configured for Wavelength 1.
Green Wavelength 2 LED	Each port supports two wavelengths on the DWDM side. Each wavelength LED matches one of the wavelengths. This LED indicates that the board is configured for Wavelength 2.

14.8.5 MXP_2.5G_10E Card

Warning **High-performance devices on this card can get hot during operation. To remove the card, hold it by the faceplate and bottom edge. Allow the card to cool before touching any other part of it or before placing it in an antistatic bag.**

Warning **Do not reach into a vacant slot or chassis while you install or remove a module or a fan. Exposed circuitry could constitute an energy hazard.**

The 2.5-Gbps–10-Gbps Muxponder–100 GHz–Tunable xx.xx-xx.xx (MXP_2.5G_10E) card is a DWDM muxponder for the ONS 15454 platform that supports full optical transparency on the client side. The card multiplexes four 2.5 Gbps client signals (4 x OC48/STM-16 SFP) into a single 10-Gbps DWDM optical signal on the trunk side. The MXP_2.5G_10E provides wavelength transmission service for the four incoming 2.5 Gbps client interfaces. The MXP_2.5G_10E muxponder passes all SONET/SDH overhead bytes transparently.

The digital wrapper function (ITU-T G.709 compliant) formats the DWDM wavelength so that it can be used to set up general communication channels (GCC) for data communications, enable forward error correction, or facilitate performance monitoring.

The MXP_2.5G_10E works with Optical Transparent Network (OTN) devices defined in ITU-T G.709. The card supports Optical Data Channel Unit 1 (ODU1) to Optical Channel Transport Unit (OTU2) multiplexing, an industry standard method for asynchronously mapping a SONET/SDH payload into a digitally wrapped envelope. See the "14.8.5.5 Multiplexing Function" section on page 14-108.

The MXP_2.5G_10E card is not compatible with the MXP_2.5G_10G card, which does not supports full optical transparency. The faceplate designation of the card is "4x2.5G 10E MXP."

You can install MXP_2.5G_10E cards in Slots 1 to 6 and 12 to 17. You can provision this card in a linear configuration, as a BLSR, a path protection, or a regenerator. The card can be used in the middle of BLSR or 1+1 spans when the card is configured for transparent termination mode.

The MXP_2.5G_10E features a 1550-nm laser on the trunk port and four 1310-nm lasers on the client ports and contains five transmit and receive connector pairs (labeled) on the card faceplate. The card uses a dual LC connector on the trunk side and uses SFP modules on the client side for optical cable termination. The SFP pluggable modules are short reach (SR) or intermediate reach (IR) and support an LC fiber connector.

The MXP_2.5G_10E card detects SF, LOS, or LOF conditions on the optical facility. Refer to the *Cisco ONS 15454 SONET and DWDM Troubleshooting Guide* for a description of these conditions. The card also counts section and line BIP errors from B1 and B2 byte registers in the section and line overhead.

14.8.5.1 Key Features

The MXP_2.5G_10E card has the following high level features:

- Four 2.5 Gbps client interfaces (OC-48/STM-16) and one 10 Gbps trunk. The four OC-48 signals are mapped into a ITU-T G.709 OTU2 signal using standard ITU-T G.709 multiplexing.
- Onboard Enhanced Forward Error Correction (E-FEC) processor: The processor supports both standard RS (specified in ITU-T G.709) and E-FEC, which allows an improved gain on trunk interfaces with a resultant extension of the transmission range on these interfaces. The E-FEC functionality increases the correction capability of the transponder to improve performance, allowing operation at a lower OSNR compared to the standard RS (237,255) correction algorithm. A new BCH algorithm implemented in E-FEC allows recovery of an input BER up to 1E-3.
- Pluggable client interface optic modules: The MXP_MP_10E card has modular interfaces. Two types of optics modules can be plugged into the card. These include an OC-48/STM 16 SR-1 interface with a 7 km nominal range (for short range and intra-office applications) and an IR-1 interface with a range up to 40 km. SR-1 is defined in Telcordia GR-253 and in I-16 (ITU- G.957). IR-1 is defined in Telcordia GR-253 and in S-16-1 (ITU G.957).
- High level provisioning support: The MXP_MP_10E card is initially provisioned using Cisco MetroPlanner software. Subsequently, the card may be monitored and provisioned using CTC software.

- Link monitoring and management: The MXP_MP_10E card uses standard OC-48 OH (overhead) bytes to monitor and manage incoming interfaces. The card passes the incoming SDH/SONET data stream and its overhead bytes transparently.
- Control of layered SONET/SDH transport overhead: The card is provisionable to terminate regenerator section overhead. This is used to eliminate forwarding of unneeded layer overhead. It can help reduce the number of alarms and help isolate faults in the network.
- Automatic timing source synchronization: The MXP_MP_10E normally synchronizes from the TCC2 card. If for some reason, such as maintenance or upgrade activity, the TCC2 is not available, the MXP_MP_10E automatically synchronizes to one of the input client interface clocks.
- Configurable squelching policy: The card can be configured to squelch the client interface output if there is LOS at the DWDM receiver or if there is a remote fault. In the event of a remote fault, the card manages multiplex section alarm indication signal (MS-AIS) insertion.

14.8.5.2 Faceplate

Figure 14-60 shows the MXP_2.5G_10E faceplate and ports.

Figure 14-60 MXP_2.5G_10E Faceplate and Ports

14.8.5.3 Client Interfaces

The MXP_2.5G_10E provides four intermediate- or short-range OC-48/STM-16 ports per card on the client side. Both SR-1 or IR-1 optics can be supported and the ports utilize SFP connectors. The client interfaces use four wavelengths in the 1310-nm, ITU 100-MHz spaced channel grid.

14.8.5.4 DWDM Interface

The MXP_MP_10E serves as an OTN multiplexer, transparently mapping four OC-48 channels asynchronously to ODU1 into one 10-Gbps trunk. The DWDM trunk is tunable for transmission over four wavelengths in the 1550-nm, ITU 100-GHz spaced channel grid.

Figure 14-61 shows the block diagram for the MXP_2.5G_10E card.

Figure 14-61 MXP_2.5G_10E Block Diagram

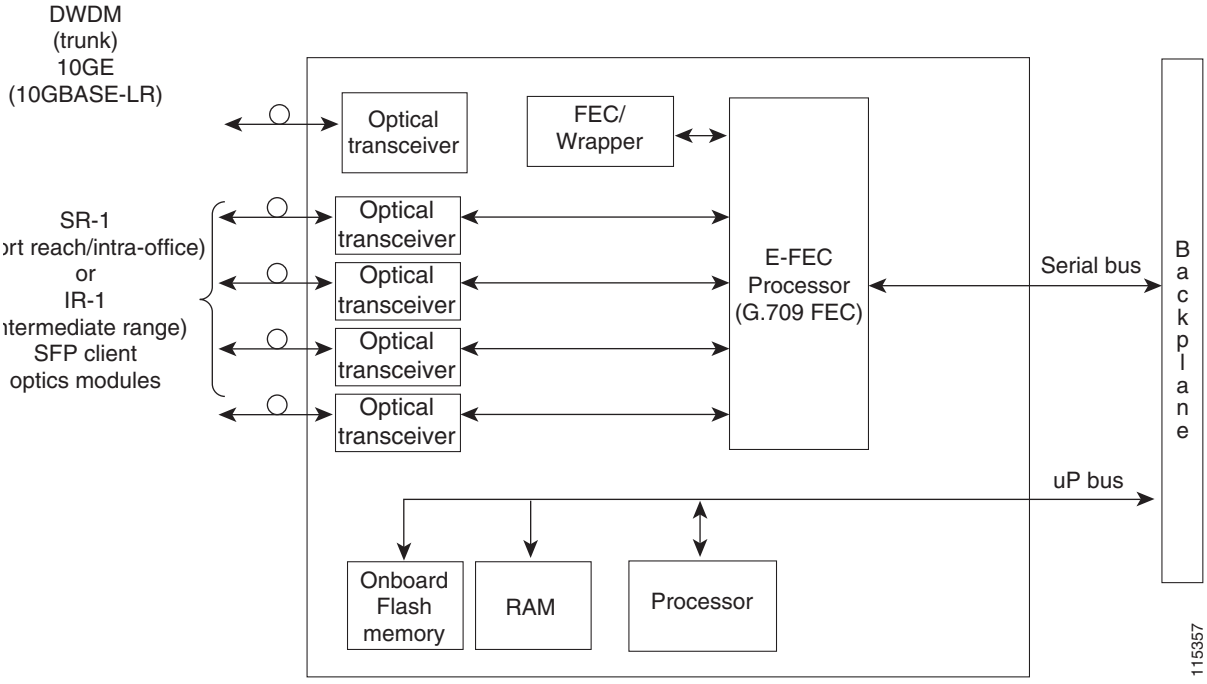

Caution You must use a 20-dB fiber attenuator (15 to 25 dB) when working with the MXP_MP_10E card in a loopback on the trunk port. Do not use direct fiber loopbacks with the MXP_MP_10E card. Using direct fiber loopbacks causes irreparable damage to the MXP_MP_10E card.

14.8.5.5 Multiplexing Function

The muxponder is an integral part of the optically transparent ROADM network in which data payload channels and wavelengths are processed exclusively at the optical level without electrical to optical (E-O) conversion. The key function of MXP_MP_10E is to multiplex 4 OC-48/STM16 signals onto one ITU-T G.709 OTU2 optical signal (DWDM transmission). The multiplexing mechanism allows the signal to be terminated at a far-end node by another MXP_2.5G_10E card.

Optical transparency on the muxponder is configured using OTUx and ODUx OH bytes. The ITU-T G.709 specification defines OH byte formats that are used to configure, set and monitor frame alignment, FEC mode, section monitoring, tandem connection monitoring, and optical transparency.

The MXP_2.5G_10E card performs ODU to OTU multiplexing as defined in ITU-T G.709. The ODU is the framing structure and byte definition (ITU-T G.709 digital wrapper) used to define the data payload coming into one of the SONET/SDH client interfaces on MXP_2.5G_10E. The term ODU1 refers to an ODU that operates at 2.5-Gbps line rate. On the MXP_2.5G_10E, there are four client interfaces that can be defined using ODU1 framing structure and format by asserting a ITU-T G.709 digital wrapper.

The output of the muxponder is a single 10-Gbps DWDM trunk interface defined using OTU2. It is within the OTU2 framing structure that FEC or E-FEC information is appended to enable error checking and correction.

14.8.5.6 Timing Synchronization

The MXP_2.5G_10E card is synchronized to the TCC2 clock during normal conditions and transmits the ITU-T G.709 frame using this clock. No holdover function is implemented. If clocks from both TCC2 cards are not available, the MXP_2.5G_10E switches automatically (hitless) to the first of the four valid client clocks with no time restriction as to how long it can run on this clock. The MXP_2.5G_10E continues to monitor the TCC2. If a TCC2 is restored to working order, the MXP_2.5G_10E reverts to the normal working mode of running from the TCC2 clock. If there is no valid TCC2 clock and all of the client channels become invalid, the card waits (no valid frames processed) until one of the TCC2 cards supplies a valid clock. In addition, the card is allowed to select the recovered clock from one active and valid client channel and supply that clock to the TCC2.

14.8.5.7 Y-Cable Protection

The MXP_2.5G_10E card supports Y-cable protection. Two MXP_2.5G_10E cards can be joined in a Y-cable protection group with one card assigned as the working card and the other defined as the protection card. This protection mechanism provides redundant bidirectional paths. See the "14.9.1 Y-Cable Protection" section on page 14-119 for more detailed information.

The Y-protection mechanism is provisionable and can be set ON or OFF (OFF is the default mode). When a signal fault is detected (LOS, LOF, signal degrade [SD], or SF on the DWDM receiver port in the case of ITU-T G.709 mode) the protection mechanism software automatically switches between paths.

Note If you create a GCC on either card of the protect group, the trunk port stays permanently active, regardless of the switch state. When you provision a GCC, you are provisioning unprotected overhead bytes. The GCC is not protected by the protect group.

14.8.5.8 Enhanced FEC (E-FEC) Capability

A key feature of the MXP_2.5G_10E is the availability to configure the Forward Error correction in three modes: NO FEC, FEC, and E-FEC. The output bit rate are always 10.7092 Gbps as defined in G.709, but the error coding performance can be provisioned as follows:

- NO FEC: no forward error correction
- FEC: standard G.975 Reed-Solomon algorithm
- E-FEC: standard G.975.1 two orthogonally concatenated BCH super FEC code. This FEC scheme contains three parameterizations of the same scheme of two orthogonally interleaved block codes (BCH). The constructed code is decoded iteratively to achieve the expected performance.

14.8.5.9 FEC and E-FEC Modes

As client side traffic passes through the MXP_2.5G_10E card, it can be digitally wrapped using FEC mode error correction or E-FEC mode error correction (or no error correction at all). The FEC mode setting provides a lower level of error detection and correction than the E-FEC mode setting of the card. As a result, using E-FEC mode allows higher sensitivity (lower OSNR) with a lower bit error rate than FEC mode. E-FEC enables longer distance trunk-side transmission than with FEC.

The E-FEC feature is one of three basic modes of FEC operation. FEC can be turned off, FEC can be turned on, or E-FEC can be turned on to provide greater range and lower BER. The default mode is FEC on and E-FEC off. E-FEC is provisioned using CTC.

14.8.5.10 SONET/SDH Overhead Byte Processing

The card passes the incoming SDH/SONET data stream and its overhead bytes for the client signal transparently. The card can be provisioned to terminate regenerator section overhead. This is used to eliminate forwarding of unneeded layer overhead. It can help reduce the number of alarms and help isolate faults in the network.

14.8.5.11 Client Interface Monitoring

The following parameters are monitored on the MXP_2.5G_10E card:

- Laser bias current is measured as a performance monitoring parameter
- LOS is detected and signaled
- Rx and Tx power are monitored

The following parameters are monitored in real time mode (1 second):

- Optical power transmitted (client)
- Optical power received (client)

In case of loss of communication (LOC) at the DWDM receiver or far-end LOS, the client interface behavior is configurable. AIS can be invoked or the client signal can be squelched.

14.8.5.12 Wavelength Identification

The card shall uses trunk lasers that are wave-locked, which allows the trunk transmitter to operate on the ITU grid effectively. Table 14-58 describes the required trunk transmit laser wavelengths. The laser is tunable over eight wavelengths at 50 GHz spacing or four at 100 GHz.

Table 14-58 MXP_2.5G_10E Trunk Wavelengths

Band	Wavelength (nm)
30.3	1530.33
30.3	1531.12
30.3	1531.90
30.3	1532.68
34.2	1534.25
34.2	1535.04
34.2	1535.82
34.2	1536.61
38.1	1538.19
38.1	1538.98
38.1	1539.77
38.1	1540.56
42.1	1542.14
42.1	1542.94
42.1	1543.73

Table 14-58 MXP_2.5G_10E Trunk Wavelengths (continued)

Band	Wavelength (nm)
42.1	1544.53
46.1	1546.12
46.1	1546.92
46.1	1547.72
46.1	1548.51
50.1	1550.12
50.1	1550.92
50.1	1551.72
50.1	1552.52
54.1	1554.13
54.1	1554.94
54.1	1555.75
54.1	1556.55
58.1	1558.17
58.1	1558.98
58.1	1559.79
58.1	1560.61

14.8.5.13 Automatic Laser Shutdown

The automatic laser shutdown (ALS) procedure is supported on both client and trunk interfaces. On the client interface, ALS is be compliant with ITU-T G.664 (6/99). On the data application and trunk interface, the switch on and off pulse duration is greater than 60 seconds. The on and off pulse duration is user-configurable.

14.8.5.14 Jitter

For SONET and SDH signals, the MXP_2.5G_10E card complies to GR-253-CORE, ITU-T G.825, and ITU-T G.873 for jitter generation, jitter tolerance, and jitter transfer.

14.8.5.15 Lamp Test

The MXP_2.5G_10E card supports a lamp test function that is activated from the ONS 15454 front panel or through CTC to ensure that all LEDs are functional.

14.8.5.16 Onboard Traffic Generation

The MXP_2.5G_10E card provides internal traffic generation for testing purposes according to pseudo-random bit sequence (PRBS), SONET/SDH, or ITU-T G.709.

14.8.5.17 MXP_2.5G_10E Card-Level Indicators

Table 14-59 describes the three card-level LEDs on the MXP_2.5G_10E card.

Table 14-59 MXP_2.5G_10E Card-Level Indicators

Card-Level LED	Description
Red FAIL LED	The red FAIL LED indicates that the card's processor is not ready. This LED is on during reset. The FAIL LED flashes during the boot process. Replace the card if the red FAIL LED persists.
ACT/STBY LED Green (Active) Amber (Standby)	If the ACT/STBY LED is green, the card is operational (one or more ports active) and ready to carry traffic. If the ACT/STBY LED is amber, the card is operational and in standby (protect) mode.
Amber SF LED	The amber SF LED indicates a signal failure or condition such as LOS, LOF, or high BERs on one or more of the card's ports. The amber SF LED is also on if the transmit and receive fibers are incorrectly connected. If the fibers are properly connected and the link is working, the light turns off.

14.8.5.18 MXP_2.5G_10E Port-Level Indicators

Table 14-60 describes the seven port-level LEDs on the MXP_2.5G_10E card.

Table 14-60 MXP_2.5G_10E Port-Level Indicators

Port-Level LED	Description
Green Client LED (four LEDs)	The green Client LED indicates that the client port is in service and that it is receiving a recognized signal. The card has four client ports, and so has four Client LEDs.
Green DWDM LED	The green DWDM LED indicates that the DWDM port is in service and that it is receiving a recognized signal.

14.8.6 MXP_MR_2.5G and MXPP_MR_2.5G Cards

The 2.5-Gbps Multirate Muxponder-100 GHz-Tunable 15xx.xx-15yy.yy (MXP_MR_2.5G) card aggregates a mix and match of client Storage Area Network (SAN) service client inputs (GE, FICON, and Fibre Channel) into one 2.5 Gbps STM-16/OC-48 DWDM signal on the trunk side. It provides one long-reach STM-16/OC-48 port per card and is compliant with Telcordia GR-253-CORE.

The 2.5-Gbps Multirate Muxponder–Protected–100 GHz–Tunable 15xx.xx-15yy.yy (MXPP_MR_2.5G) card aggregates various client SAN service client inputs (GE, FICON, and Fibre Channel) into one 2.5 Gbps STM-16/OC-48 DWDM signal on the trunk side. It provides two long-reach STM-16/OC-48 ports per card and is compliant with ITU-T G.957 and Telcordia GR-253-CORE.

Because the cards are tunable to one of four adjacent grid channels on a 100 GHz spacing, each card is available in eight versions, with 15xx.xx representing the first wavelength and 15yy.yy representing the last wavelength of the four available on the board. In total, 32 DWDM wavelengths are covered in accordance with the ITU-T 100GHz grid standard, G.692, and Telcordia GR-2918-CORE, Issue 2. The card versions along with their corresponding wavelengths are shown in Table 14-61.

Table 14-61 Card Versions

Card Version	Frequency Channels at 100 GHz (0.8 nm) Spacing			
1530.33 - 1532.68	1530.33 nm	1531.12 nm	1531.90 nm	1532.68 nm
1534.25 - 1536.61	1534.25 nm	1535.04 nm	1535.82 nm	1536.61 nm
1538.19 - 1540.56	1538.19 nm	1538.98 nm	1539.77 nm	1540.56 nm
1542.14 - 1544.53	1542.14 nm	1542.94 nm	1543.73 nm	1544.53 nm
1546.12 - 1548.51	1546.12 nm	1546.92 nm	1547.72 nm	1548.51 nm
1550.12 - 1552.52	1550.12 nm	1550.92 nm	1551.72 nm	1552.52 nm
1554.13 - 1556.55	1554.13 nm	1554.94 nm	1555.75 nm	1556.55 nm
1558.17 - 1560.61	1558.17 nm	1558.98 nm	1559.79 nm	1560.61 nm

The muxponders are intended to be used in applications with long DWDM metro or regional unregenerated spans. Long transmission distances are achieved through the use of flat gain optical amplifiers.

The client interface supports the following payload types:

- GE
- 1G FC
- 2G FC
- 1G FICON
- 2G FICON

Note Because the client payload cannot oversubscribe the trunk, a mix of client signals can be accepted, up to a maximum limit of 2.5 Gbps.

Table 14-62 shows the input data rate for each client interface, and the encapsulation method. The current version of the Transparent Generic Framing Procedure (GFP-T) G.7041 supports transparent mapping of 8B/10B block-coded protocols, including Gigabit Ethernet, Fibre Channel, and FICON.

In addition to the GFP mapping, 1 Gbps traffic on port 1 or port 2 of the high-speed SERDES is mapped to an STS-24c channel. If two 1 Gbps client signals are present at port 1 and port 2 of the high-speed SERDES, the port 1 signal is mapped into the first STS-24c channel and the port 2 signal into the second STS-24c channel. The two channels are then mapped into an OC-48 trunk channel.

Table 14-62 MXP_MR_2.5G and MXP_MR_2.5G Client Interface Data Rates and Encapsulation

Client Interface	Input Data Rate	GFP-T G.7041 Encapsulation
GE	1.25 Gbps	Yes
1G FC	1.06 Gbps	Yes
2G FC	2.125 Gbps	Yes
1G FICON	1.06 Gbps	Yes
2G FICON	2.125 Gbps	Yes

Table 14-63 shows some of the mix and match possibilities on the various client ports. The table is intended to show the full client payload configurations for the card.

Table 14-63 Client Data Rates and Ports

Mode	Port(s)	Aggregate Data Rate
GE	1, 2	2.5 Gbps
1G FC	1, 2	2.125 Gbps
2G FC	1	2.125 Gbps
1G FICON	1, 2	2.125 Gbps
2G FICON	1	2.125 Gbps

For the MXP_MR_2.5G card, protection is done using Y-cable protection. Two MXP_MR_2.5G cards can be joined in a Y-cable protection group, which provides protection against failures both on the fiber and in the muxponders.

For the MXPP_MR_2.5G card, protection is done using splitter protection, which provides protection against failures due to fiber cuts or unacceptable signal degradation on the trunk side. See the "14.9 Transponder and Muxponder Protection" section on page 14-119 for more detailed information.

Note Switching is performed only if the protect line is error free.

Generic Framing Procedure Transparent Performance Monitoring (GFP-T PM) is available via remote monitoring (RMON), and trunk PM is managed according to Telcordia GR-253 and ITU G.783/826. Client PM is achieved through RMON for FC and GE.

A buffer-to-buffer credit management scheme provides FC flow control. With this feature enabled, a port indicates the number of frames that can be sent to it (its buffer credit), before the sender is required to stop transmitting and wait for the receipt of a "ready" indication The MXP_MR_2.5G and MXPP_MR_2.5 cards support FC credit based flow control with a buffer-to-buffer credit extension of up to 1600 km for 1G FC and up to 800 km for 2G FC. The feature can be enabled or disabled.

14.8.6.1 Faceplates

Figure 14-62 shows the MXP_MR_2.5G and MXPP_MR_2.5G faceplates.

Figure 14-62 MXP_MR_2.5G and MXPP_MR_2.5G Faceplates

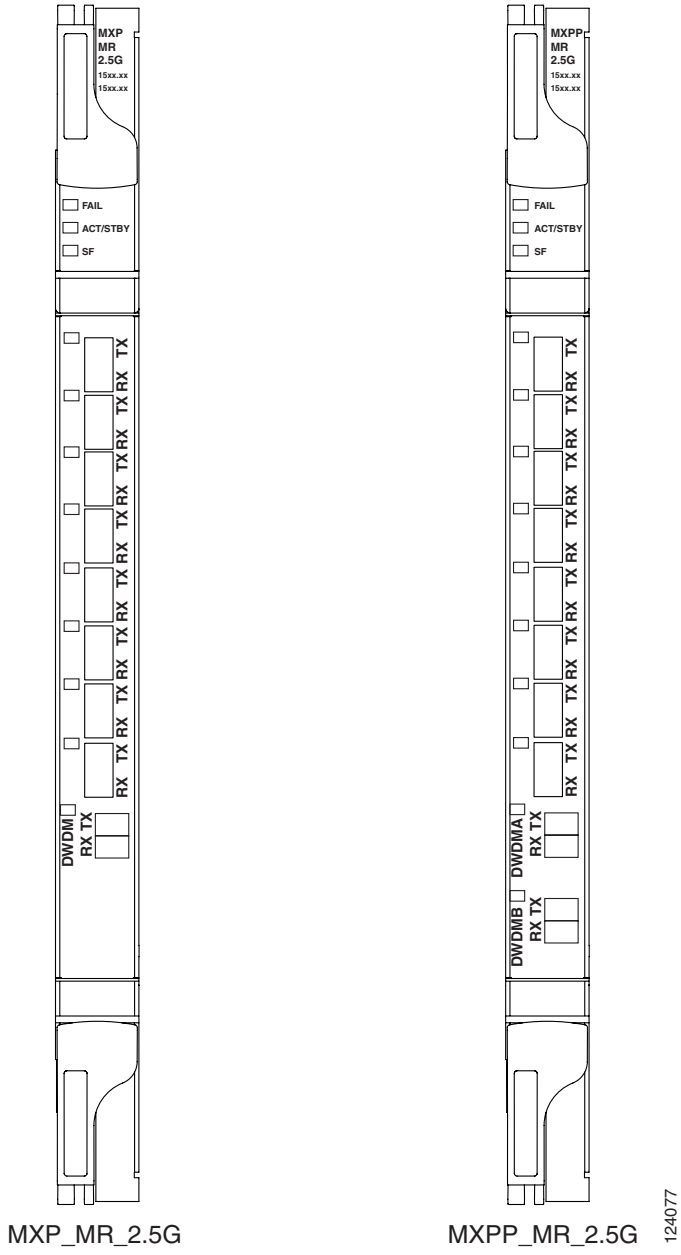

14.8.6.2 Block Diagram

Figure 14-63 shows a block diagram of the MXP_MR_2.5G card. The diagram shows that there are eight SFP client interfaces. Ports 1 and 2 can be used for GE, FC, or FICON. Ports 3 through 8 are for future use. There are two serializer/deserializer (SERDES) blocks dedicated to the high-speed interfaces (GE,

FC, and FICON) and two SERDES blocks for future interfaces. An FPGA is provided to support different configurations for different modes of operation. This FPGA has a Universal Test and Operations Physical Interface for ATM (UTOPIA) interface. A transceiver add-drop multiplexer (TADM) chip supports framing. Finally the output signal is serialized and connected to the trunk front end with a direct modulation laser. The trunk receive signal is converted into an electrical signal with an avalanche photodiode (APD), deserialized, then sent to the TADM framer and FPGA.

The MXPP_MR_2.5G is the same, except at the trunk interface, the output power is split using a 50/50 splitter. On the receive direction, there are two APDs, two SERDES blocks, and two TADM framers. This is necessary to monitor both the Main and Protect paths. A switch selects which of the two paths are connected to the client interfaces.

Figure 14-63 MXP_MR_2.5G and MXPP_MR_2.5G Block Diagram

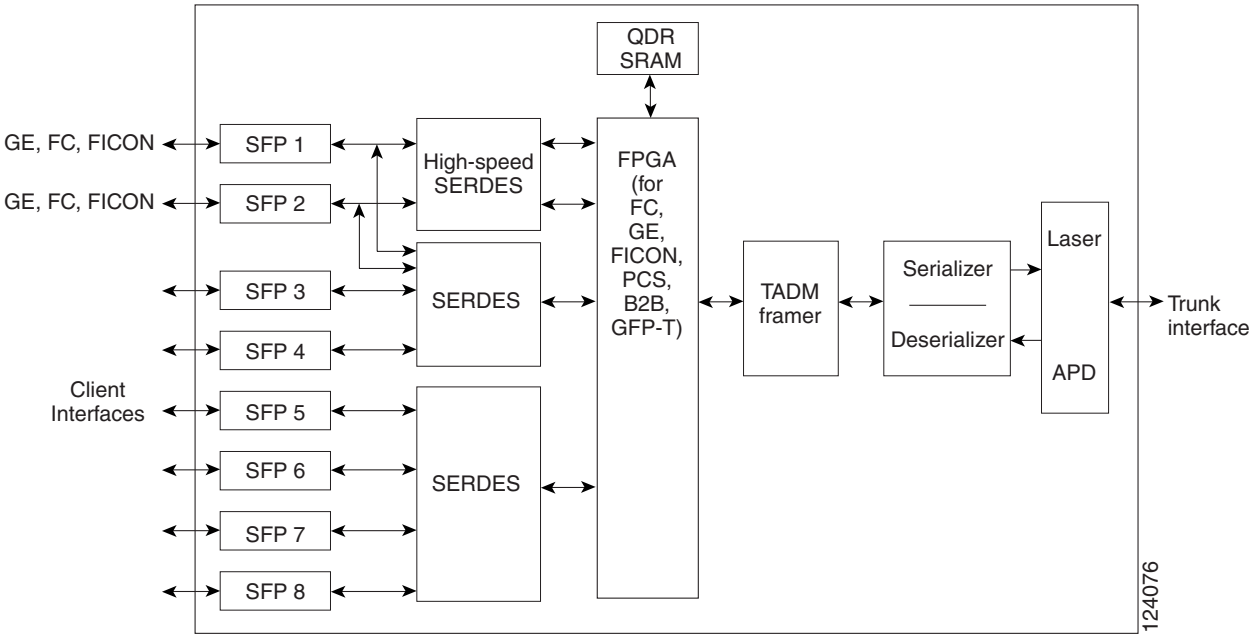

Caution You must use a 20-dB fiber attenuator (15 to 25 dB) when working with the MXP_MR_2.5G and MXPP_MR_2.5G cards in a loopback configuration on the trunk port. Do not use direct fiber loopbacks with the MXP_MR_2.5G and MXPP_MR_2.5G cards. Using direct fiber loopbacks causes irreparable damage to the MXP_MR_2.5G and MXPP_MR_2.5G cards.

You can install MXP_MR_2.5G and MXPP_MR_2.5G cards in Slots 1 to 6 and 12 to 17. The cards must be able to be inserted into any of the transport slots of either the ONS 15454 ANSI or ETSI products. The TCC2 card is the only other card required to be used with these muxponder cards. The XC and XCVT cards are not required. The existence of XC/XCVT/XC10G does not affect the operation of the muxponder cards.

The MXP_MR_2.5G card features a 1550-nm laser for the trunk/line port and a 1310-nm or 850-nm laser (depending on the SFP) for the client ports. The card contains eight 12.5 degree downward tilt SFP modules for the client interfaces. For optical termination, each SFP uses two LC connectors, which are labeled TX and RX on the faceplate. The trunk port is dual LC connector with a 45 degree downward angle.

The MXPP_MR_2.5G card features a 1550-nm laser for the trunk/line port and a 1310-nm or 850-nm laser (depending on the SFP) for the client port. The card contains eight 12.5 degree downward tilt SFP modules for the client interfaces. For optical termination, each SFP uses two LC connectors, which are labeled TX and RX on the faceplate. There are two trunk port connectors (one for working and one for protect). Each is a dual LC connector with a 45 degree downward angle.

The MXP_MR_2.5G and MXPP_MR_2.5G cards detect SF, LOS, or LOF conditions on the trunk interface of the optical facility. Refer to the *Cisco ONS 15454 Troubleshooting Guide* for a description of these conditions. The card also counts section and line BIP errors for the trunk interface from the B1 and B2 byte registers in the section and line overhead.

14.8.6.3 MXP_MR_2.5G and MXPP_MR_2.5G Safety Labels

The MXP_MR_2.5G and MXPP_MR_2.5G cards have several safety labels that provide laser radiation and electrical shock warnings.

Figure 14-64 shows the laser radiation warning hazard level label. The faceplate of these cards are clearly labeled with warnings about the equipment radiation level. Personnel must understand all warning labels before working with these cards. The hazard level label warns the personnel against exposure to laser radiation of Class 1 limits calculated in accordance with IEC60825-1 Ed.1.2.

Figure 14-64 Laser Radiation Warning—Hazard Level Label

Figure 14-65 shows the laser source connector label. This label indicates a laser source at the optical connectors where it has been placed.

Figure 14-65 Laser Radiation Warning—Laser Source Connector Label

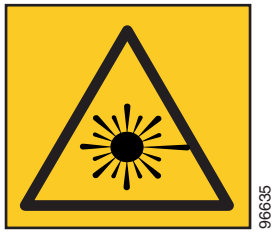

Figure 14-66 shows the FDA compliance label. This label shows the statement of compliance to FDA standards and that the hazard level classification is in accordance with IEC60825-1 Am.2 or Ed.1.2.

Figure 14-66 FDA Compliance Statement Label

COMPLIES WITH 21 CFR 1040.10
AND 1040.11 EXCEPT FOR
DEVIATIONS PURSUANT TO
LASER NOTICE NO.50,
DATED JULY 26, 2001

96634

Figure 14-67 shows the electrical energy hazard label. This label alerts personnel to electrical hazards within the card. The potential of shock hazard exists when adjacent cards are removed during maintenance and touching exposed electrical circuitry on the card itself.

Figure 14-67 Electrical Energy Hazard Label

65541

14.8.6.4 MXP_MR_2.5G and MXPP_MR_2.5G Card-Level Indicators

Table 14-64 lists the four card-level LEDs on the MXP_MR_2.5G and MXPP_MR_2.5G cards.

Table 14-64 MXP_MR_10G and MXPP_MR_2.5G Card-Level Indicators

Card-Level LED	Description
FAIL LED (Red)	Red indicates that the card's processor is not ready. This LED is on during reset. The FAIL LED flashes during the boot process. Replace the card if the red FAIL LED persists.
ACT/STBY LED **Green (Active)** **Amber (Standby)**	Green indicates that the card is operational (one or both ports active) and ready to carry traffic. Amber indicates that the card is operational and in standby (protect) mode.
SF LED (Amber)	Amber indicates a signal failure or condition such as LOS, LOF, or high BERs on one or more of the card's ports. The amber SF LED is also illuminated if the transmit and receive fibers are incorrectly connected. If the fibers are properly connected and the link is working, the LED turns off.
DWDM LED **Green (Active)** **Amber (Protect Traffic)** **Red (LOS)**	Green indicates that the board is carrying traffic (active) on the interface. When the LED is amber, it indicates that the interface is carrying protect traffic in a splitter protection card (MXPP_MR_2.5G). A red LED indicates that the interface has detected an LOS or LOC.

14.8.6.5 MXP_MR_2.5G and MXPP_MR_2.5G Port-Level Indicators

Table 14-65 lists the eight port-level LEDs on the MXP_MR_2.5G and MXPP_MR_2.5G cards.

Table 14-65 MXP_MR_10G and MXPP_MR_2.5G Port-Level Indicators

Port-Level LED	Description
Client LEDs (eight LEDs)	Green indicates that the port is carrying traffic (active) on the interface. Amber indicates that the port is carrying protect traffic (MXPP_MR_2.5G). Red indicates that the port has detected a loss of signal.

14.9 Transponder and Muxponder Protection

Two types of protection are available:

- Y-cable protection
- Splitter protection

14.9.1 Y-Cable Protection

Y-cable protection is available for the following ONS 15454 transponder and muxponder cards:

- TXP_MR_10G
- TXP_MR_2.5G
- MXP_MR_2.5G
- MXP_2.5G_10G

To create Y-cable protection, you create a Y-cable protection group for two TXP or MXP cards using the CTC software, then connect the client ports of the two cards physically with a Y-cable. The single client signal is sent into the Rx Y-cable and is split between the two TXP or MXP cards. The two Tx signals from the client side of the TXP or MXP cards are combined in the TX Y-cable into a single client signal. Only the active card signal passes through as the single TX client signal. The other card must have its laser turned off to avoid signal degradation where the Y-cable joins. Figure 14-68 shows the Y-cable signal flow.

Note Loss of Signal–Payload (LOS-P) alarms, also called Incoming Payload Signal Absent alarms, can occur on a split signal if the ports are not in a Y-cable protection group.

Figure 14-68 Y-Cable Protection

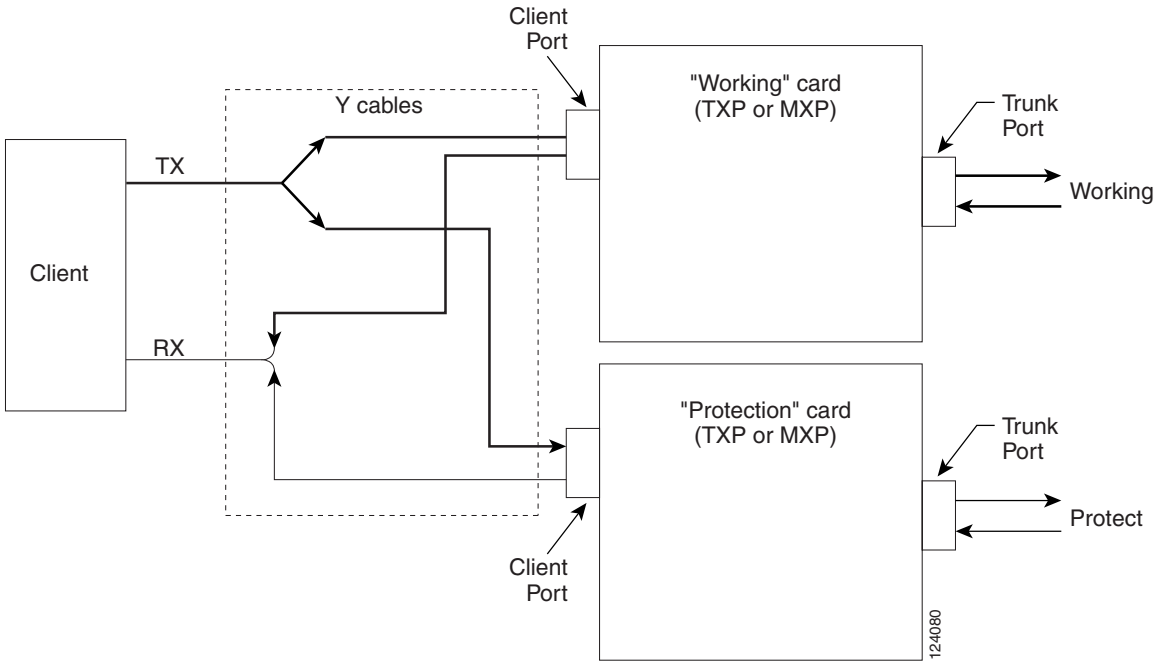

14.9.2 Splitter Protection

Splitter protection, shown in Figure 14-69, is provided with TXPP and MXPP cards. To implement splitter protection, a client injects a single signal into the client Rx port. An optical splitter internal to the card then splits the signal into two separate signals and routes them to the two trunk Tx ports. The two signals are transmitted over diverse optical paths. The far-end MXPP or TXPP card uses an optical switch to choose one of the two trunk Rx port signals and injects it into the Tx client port. When using splitter protection with two MXPP or TXPP cards, there are two different optical signals that flow over diverse paths in each direction. In case of failure. the far-end switch must choose the appropriate signal using its built-in optical switch. The triggers for a protection switch are LOS, LOF, SF, or SD.

Figure 14-69 Splitter Protection

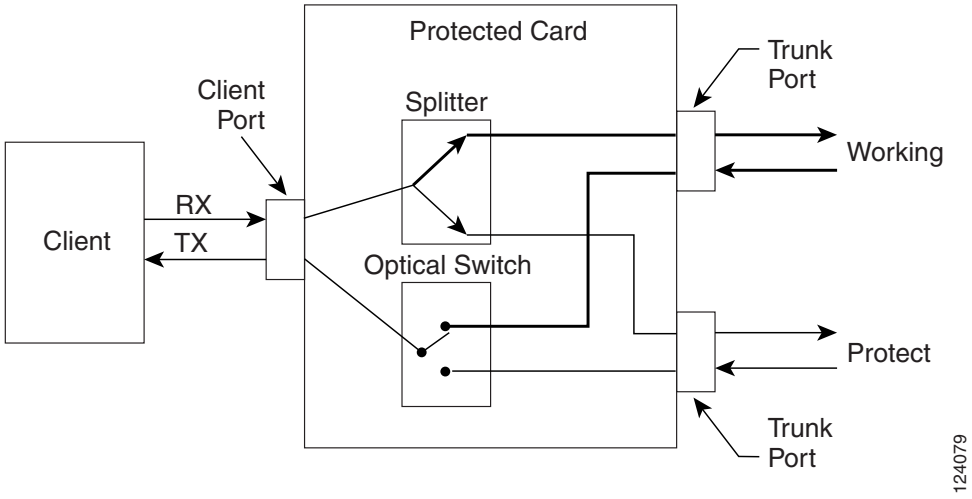

You create and modify protection schemes using CTC software.

14.10 Far-End Laser Control (FELC)

The 15454 DWDM cards provide a transparent mode that accurately conveys the client input signal to the far-end client output signal. The client signal is normally carried as payload over the DWDM signals. Certain client "signals", however, cannot be conveyed as payload. In particular, client LOS or LOF cannot be carried. Far-end laser control is the ability to convey an LOS or LOF from the near-end client input to the far-end client output.

If an LOS is detected on the near-end client input, the near-end trunk sets the appropriate bytes in the OTN overhead of the DWDM line. These bytes are received by the far-end trunk, and cause the far-end client laser to be turned off. When the laser is turned off, it is said to be squelched. If the near-end LOS clears, the near-end trunk clears the appropriate bytes in the OTN overhead, the far-end detects the changed bytes, and the far-end client squelch is removed.

FELC also covers the situation in which the trunk port detects that it has an invalid signal; the client is squelched so as not to propagate the invalid signal.

Some payload types preclude the use of OTN overhead bytes. These modes are the 2R modes. In 2R mode, an LOS on the client port causes the trunk laser to turn off. The far end detects the LOS on its trunk receiver and squelches the client.

FELC is not provisionable. It is always enabled when the DWDM card is in Transparent mode. However, FELC signaling to the far-end is only possible when G.709 is enabled on both ends of the trunk span.

14.11 Transponder and Muxponder Jitter Considerations

Jitter introduced by the SFPs used in the transponders and muxponders must be considered when cascading several cards. In the case of the TXP_MR_2.5G (and TXPP_MR_2.5G), MXP_MR_2.5G (and MXPP_MR_2.5G), and TXP_MR_10E cards, several transponders may be cascaded before the cumulative jitter violates the jitter specification. The recommended limit is 20 cards.

In the case of the TXP_MR_10G cards, you may also cascade several cards, although the recommended limit is 12 cards.

In the case of the MXP_2.5G_10G and MXP_2.5G_10E cards, any number of cards may be cascaded as long as the maximum reach between any two is not exceeded. This is because any time the signal is demultiplexed, the jitter is eliminated as a limiting factor.

The maximum reach between one transponder and the other must be halved if a Y-cable is used. For more information on Y-cable operation, see the "14.9.1 Y-Cable Protection" section on page 14-119.

14.12 Transponder and Muxponder Termination Modes

DWDM transponder and muxponder cards have various SONET and SDH termination modes that can be configured using CTC (see Chapter 10, "Change Card Settings"). The termination modes are summarized in Table 14-66.

Table 14-66 DWDM Transponder and Muxponder Termination Modes

Card	Termination Modes	Description
All TXP and MXP cards, with the exception of the MXP_2.5G_10G card (see next section of this table)	Transparent Termination	All the bytes of the payload pass transparently through the cards.
	Section Termination	The SONET Transport Overhead (TOH) section bytes and the SDH regenerator section overhead bytes are terminated. None of these section overhead bytes are passed through. They are all regenerated, including the SONET TOH section data communication channel (DCC) bytes and the SDH data communications channel regenerator (DCCr) bytes. In the section termination mode, the SONET TOH line and SDH multiplex section overhead bytes are passed transparently.
	Line Termination	In the line termination mode, the section and line overhead bytes for SONET and the overhead bytes for the SDH multiplex and regenerator sections are terminated. None of the overhead bytes are passed through. They are all regenerated, including the SONET SDCC and line data communication channel (LDCC) bytes and the SDH DCCr and data communications channel multiplexer (DCCm) bytes.
MXP_2.5G_10G[1]	Transparent Termination	All of the client bytes pass transparently through except the following: B1 is rebuilt, S1 is rewritten, A1–A2 are regenerated, and H1–H3 are regenerated.
	Section Termination	The SONET TOH section bytes and the SDH regenerator section overhead bytes are terminated. None of these section overhead bytes are passed through. They are all regenerated, including the SONET TOH section DCC bytes and the SDH DCCr bytes. In the section termination mode, the SONET TOH line and SDH multiplex section overhead bytes are passed transparently.
	Line Termination	In the line termination mode, the section and line overhead bytes for SONET and the overhead bytes for the SDH multiplex and regenerator sections are terminated. None of the overhead bytes are passed through. They are all regenerated, including the SONET SDCC and LDCC bytes and the SDH DCCr and DCCm bytes.

1. The clients operating at rates of OC48/STM16 are multiplexed into an OC192/STM64 frame before going to OTN or DWDM.

14.13 SFP Modules

This section describes the small-form factor pluggables (SFPs) that can be used with certain transponder and muxponder cards.

14.13.1 Compatibility by Card

Table 14-67 lists the transponder and muxponder cards and their compatible SFPs.

Caution Only use SFP certified for use in Cisco Optical Networking Systems. The qualified Cisco SFP pluggable module's top assembly numbers (TANs) are provided in Table 14-67.

Table 14-67 SFP Card Compatibility

Card	Compatible SFP (Cisco Product ID)	Cisco Top Assembly Number (TAN)
MXP_2.5G_10G (ONS 15454 SONET/SDH) MXP_2.5G_10E (ONS 15454 SONET/ SDH)	15454-SFP-OC48-IR= ONS-SE-2G-S1=	10-1975-01 10-2017-01
MXP_MR_2.5G MXPP_MR_2.5G	15454-SFP-GE+-LX= 15454E-SFP-GE+-LX= 15454-SFP-GEFC-SX= 15454E-SFP-GEFC-S=	10-1832-03 10-1832-03 10-1833-01 10-1833-02
TXP_MR_2.5G (ONS 15454 SONET/ SDH) TXPP_MR_2.5G (ONS 15454 SONET/ SDH)	15454-SFP3-1-IR= 15454E-SFP-L.1.1= 15454-SFP12-4-IR= 15454E-SFP-L.4.1= 15454-SFP-OC48-IR= 15454E-SFP-L.16.1= ONS-SE-2G-S1= 15454-SFP-200= 15454E-SFP-200= 15454-SFP-GEFC-SX= 15454E-SFP-GEFC-S= 15454-SFP-GE+-LX= 15454E-SFP-GE+-LX=	10-1828-01 10-1828-01 10-1976-01 10-1976-01 10-1975-01 10-1975-01 10-2017-01 10-1750-01 10-1750-01 10-1833-01 10-1833-02 10-1832-01 10-1832-02

14.13.2 SFP Description

SFPs are integrated fiber optic transceivers that provide high-speed serial links from a port or slot to the network. Various latching mechanisms can be utilized on the SFP modules. There is no correlation between the type of latch to the model type (such as SX or LX/LH) or technology type (such as Gigabit Ethernet). See the label on the SFP for technology type and model. One type of latch available is a mylar tab as shown in Figure 14-70, a second type of latch available is an actuator/button (Figure 14-71), and a third type of latch is a bail clasp (Figure 14-72).

SFP dimensions are:

- Height 0.03 in. (8.5 mm)

- Width 0.53 in. (13.4 mm)
- Depth 2.22 in. (56.5 mm)

SFP temperature ranges for are:

- COM—commercial operating temperature range -5°C to 70°C
- EXT—extended operating temperature range -5°C to 85°C
- IND—industrial operating temperature range -40°C to 85°C

Figure 14-70 Mylar Tab SFP

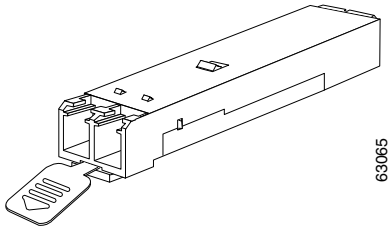

Figure 14-71 Actuator/Button SFP

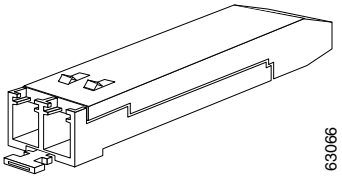

Figure 14-72 Bail Clasp SFP

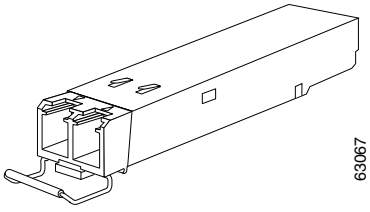

DWDM Node Reference

This chapter explains the ONS 15454 dense wavelength division multiplexing (DWDM) node types that are available for the ONS 15454. The DWDM node type is determined by the type of amplifier and filter cards that are installed in an ONS 15454. The chapter also explains the DWDM automatic power control, ROADM power equalization, span loss verification, and automatic node setup functions.

Note Unless otherwise specified, "ONS 15454" refers to both ANSI and ETSI shelf assemblies.

Chapter topics include:

- 15.1 DWDM Node Configurations, page 15-1
- 15.2 Automatic Power Control, page 15-14
- 15.3 ROADM Power Equalization Monitoring, page 15-18
- 15.4 Span Loss Verification, page 15-18
- 15.5 Automatic Node Setup, page 15-19

15.1 DWDM Node Configurations

The ONS 15454 supports the following DWDM node configurations: hub, terminal, OADM, reconfigurable OADM, anti-ASE, line amplifier, and OSC regeneration line.

Note The Cisco MetroPlanner tool creates a plan for amplifier placement and proper node equipment.

15.1.1 Hub Node

A hub node is a single ONS 15454 node equipped with two TCC2 (Timing Control Card) cards and one of the following combinations:

- Two 32MUX-O (32-Channel Multiplexer) and two 32DMX-O (32-Channel Demultiplexer) or 32DMX cards
- Two 32WSS (32-Channel Wavelength Selective Switch) and two 32DMX or 32DMX-O cards

Note The 32WSS and 32DMX are normally installed in reconfigurable OADM (ROADM) nodes, but they can be installed in hub and terminal nodes. If the cards are installed in a hub node, the 32WSS express (EXP RX and EXP TX) ports are not cabled.

A Dispersion Compensation Unit (DCU) can also be added, if necessary. The hub node does not support both DWDM and time-division multiplexing (TDM) applications since the DWDM slot requirements do not leave room for TDM cards. Figure 15-1 shows a hub node configuration with 32MUX-O and 32DMX-O cards installed.

Note The optical add/drop multiplexing (OADM) AD-xC-xx.x or AD-xB-xx.x cards are not part of a hub node because the 32MUX-O and 32DMX-O cards drop and add all 32 channels; therefore, no other cards are necessary.

Figure 15-1 Hub Node Configuration Example

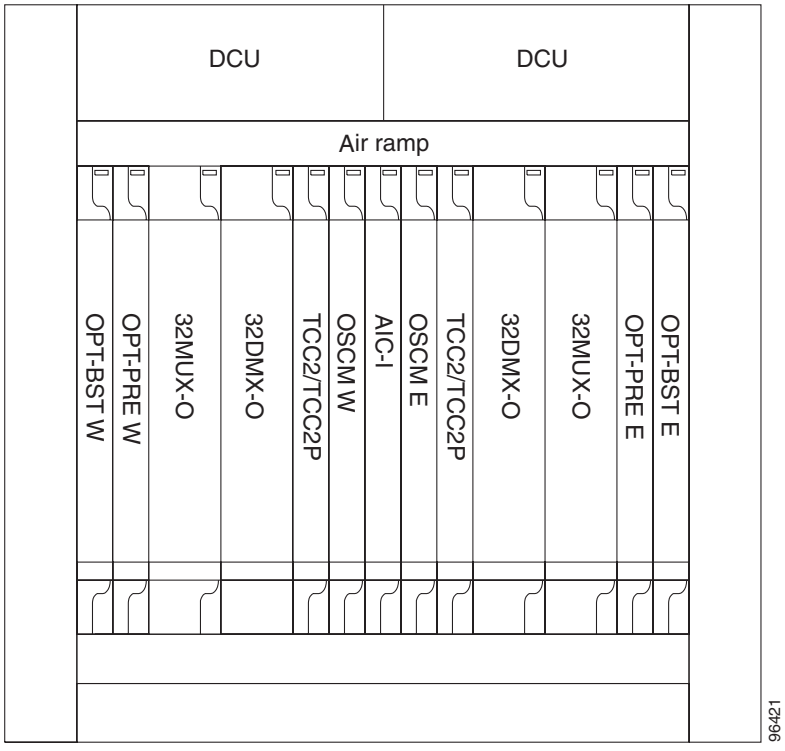

Figure 15-2 shows the channel flow for a hub node. Up to 32-channels from the client ports are multiplexed and equalized onto one fiber using the 32MUX-O card. Then, multiplexed channels are transmitted on the line in the eastward direction and fed to the Optical Booster (OPT-BST) amplifier. The output of this amplifier is combined with an output signal from the Optical Service Channel Modem (OSCM) card, and transmitted toward the east line.

Received signals from the east line port are split between the OSCM card and an Optical Preamplifier (OPT-PRE). Dispersion compensation is applied to the signal received by the OPT-PRE amplifier, and it is then sent to the 32DMX-O card, which demultiplexes and attenuates the input signal. The west receive fiber path is identical through the west OPT-BST amplifier, the west OPT-PRE amplifier, and the west 32DMX-O card.

Figure 15-2 Hub Node Channel Flow Example

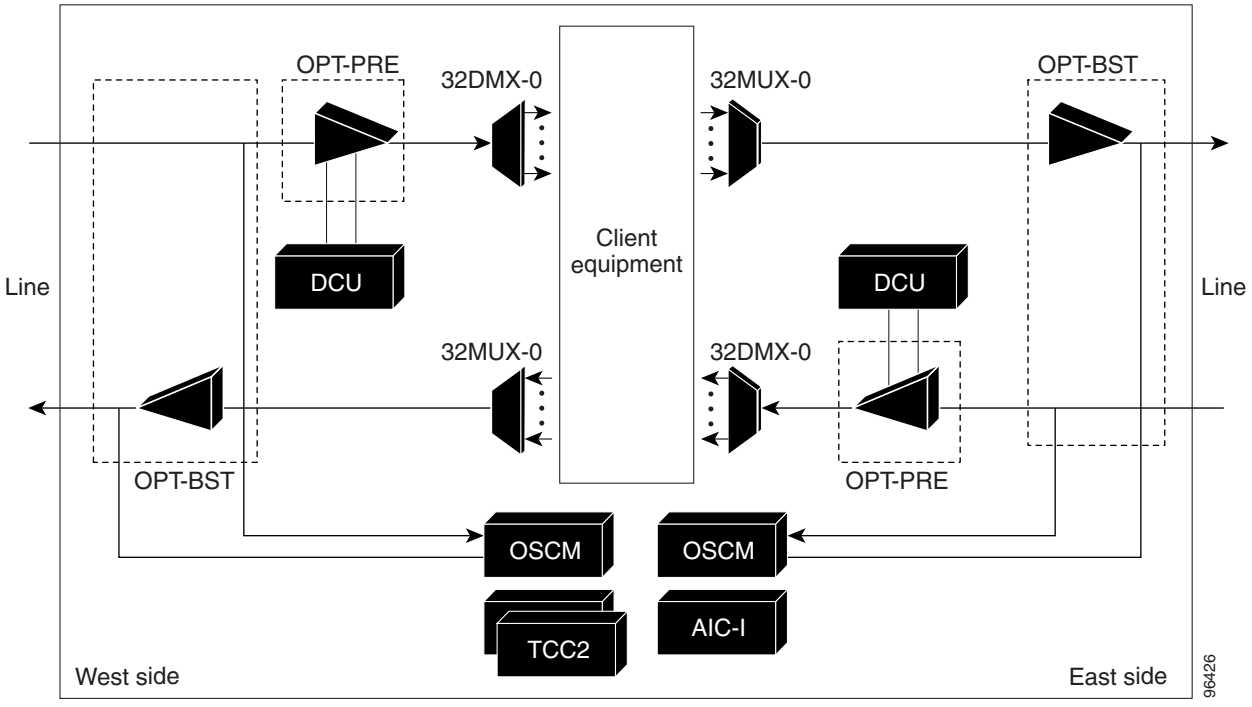

15.1.2 Terminal Node

A terminal node is a single ONS 15454 node equipped with two TCC2 cards and one of the following combinations:

- One 32MUX-O card and one 32DMX-O card
- One 32WSS and either a 32DMX or a 32DMX-O cards

Terminal nodes can be either east or west. In west terminal nodes, the cards are installed in the east slots (Slots 1 through 6). In east terminal nodes, cards are installed in the west slots (Slots 12 through 17). Figure 15-3 shows an example of an east terminal configuration with a 32MUX-O and 32DMX-O cards installed. The channel flow for a terminal node is the same as the hub node (see Figure 15-2).

Figure 15-3 Terminal Node Configuration Example

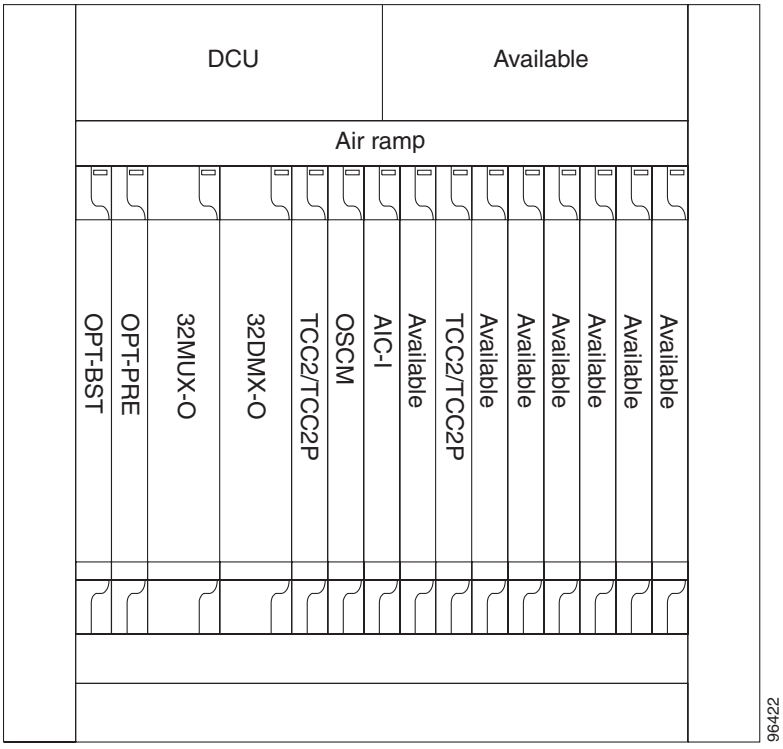

15.1.3 OADM Node

An OADM node is a single ONS 15454 node equipped with cards installed on both sides and at least one AD-xC-xx.x card or one AD-xB-xx.x card and two TCC2 cards. 32MUX-O or 32DMX-O cards cannot be installed in an OADM node. In an OADM node, channels can be added or dropped independently from each direction, and then passed through the reflected bands of all OADMs in the DWDM node (called express path). They can also be passed through one OADM card to another OADM card without using a TDM ITU line card (called optical pass through) if an external patchcord is installed.

Unlike express path, an optical pass-through channel can be converted later to an add/drop channel in an altered ring without affecting another channel. OADM amplifier placement and required card placement is determined by the Cisco MetroPlanner tool or your site plan.

OADM nodes can be amplified or passive. In amplified OADMs, the OPT-PRE and the OPT-BST amplifiers are installed on the east and west sides of the node. Figure 15-4 shows an example of an amplified OADM node configuration.

Figure 15-4 Amplified OADM Node Configuration Example

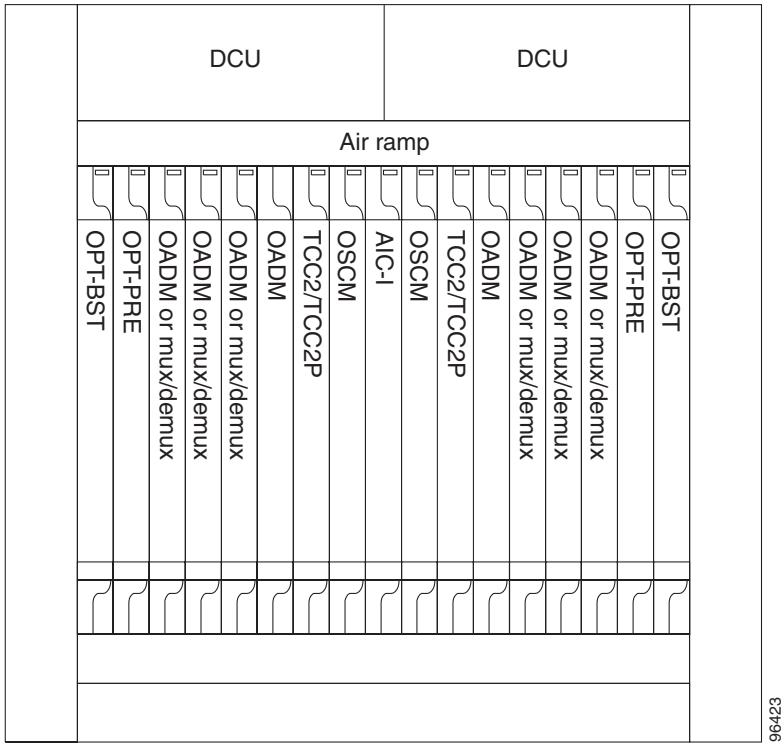

Figure 15-5 shows an example of the channel flow on the amplified OADM node. Since the 32-wavelength plan is based on eight bands (each band contains four channels), optical adding and dropping can be performed at the band level and/or at the channel level (meaning individual channels can be dropped).

Figure 15-5 Amplified OADM Node Channel Flow Example

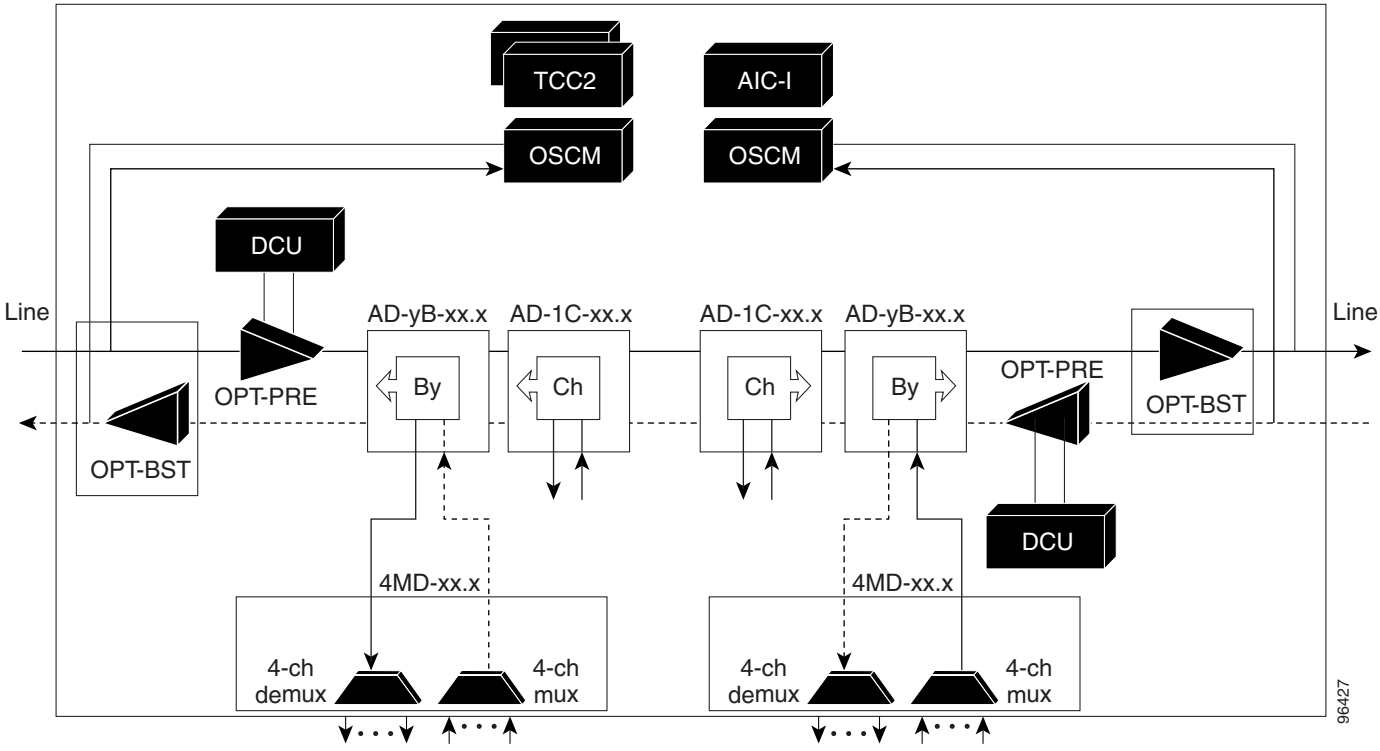

Figure 15-6 shows an example of a passive OADM node configuration. The passive OADM node is equipped with a band filter, one four-channel multiplexer/demultiplexer, and a channel filter on each side of the node.

Figure 15-6 Passive OADM Node Configuration Example

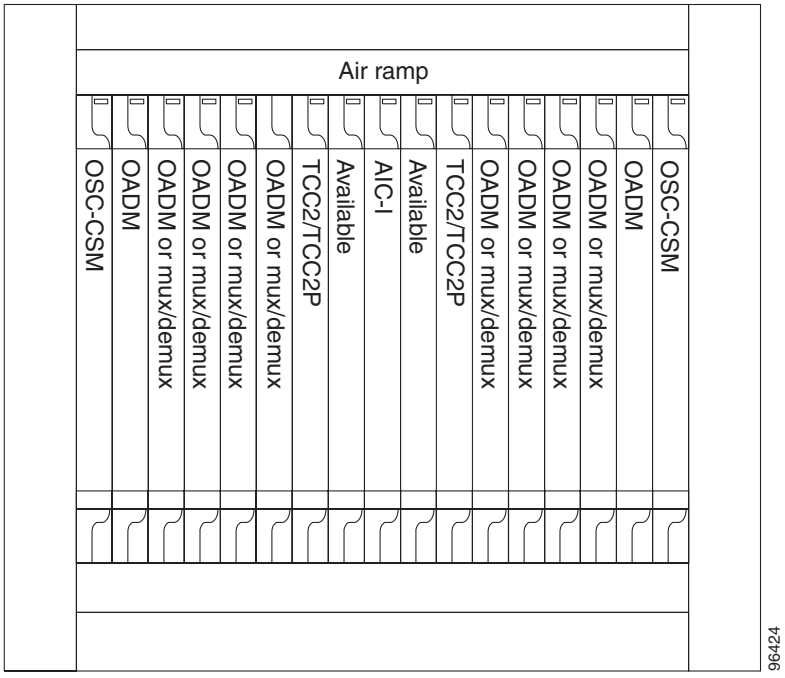

Figure 15-7 shows an example of traffic flow on the passive OADM node. The signal flow of the channels is the same as the amplified OADM, except that the Optical Service Channel and Combiner/Separator Module (OSC-CSM) card is used instead of the OPT-BST amplifier and the OSCM card.

Figure 15-7 Passive OADM Node Channel Flow Example

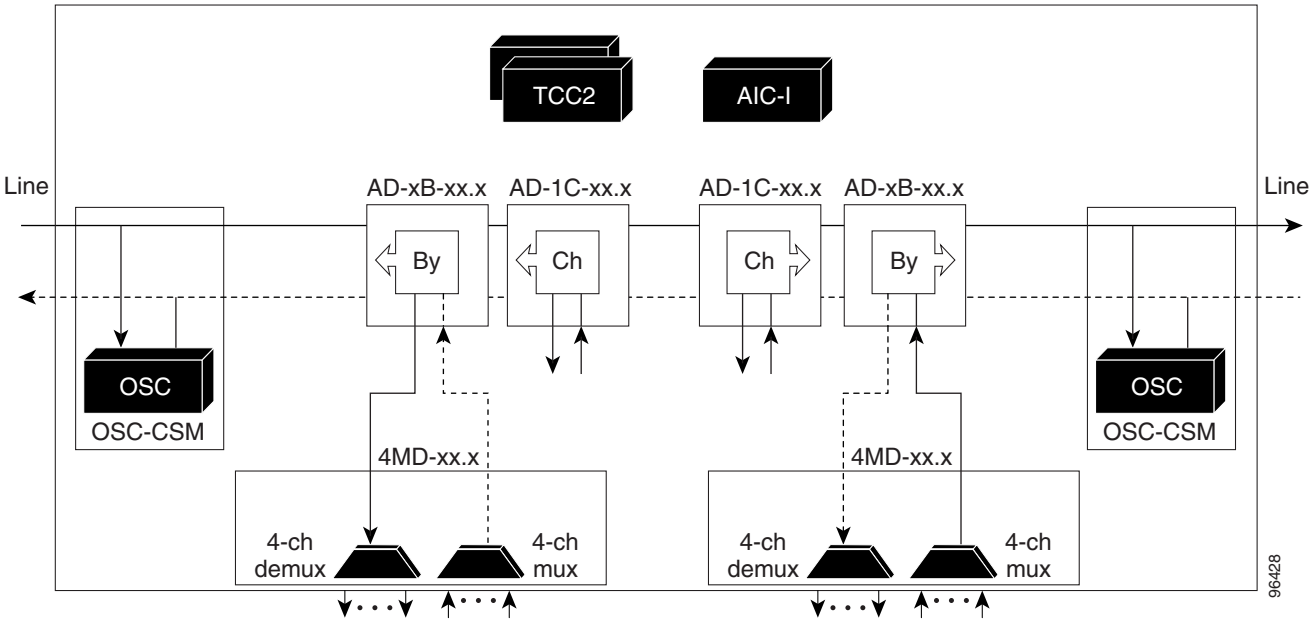

15.1.4 ROADM Node

A reconfigurable OADM (ROADM) node allows you to add and drop wavelengths without changing the physical fiber connections. ROADM nodes are equipped with two 32WSS cards. 32DMX or 32DMX-O demultiplexers are typically installed, but are not required. Transponders (TXPs) and muxponders (MXPs) can be installed in Slots 6 and 12 and, if amplification is not used, in any open slot. Figure 15-4 shows an example of an amplified ROADM node configuration.

Figure 15-8 ROADM Node with BST-PRE, OPT-BST, and 32DMX Cards Installed

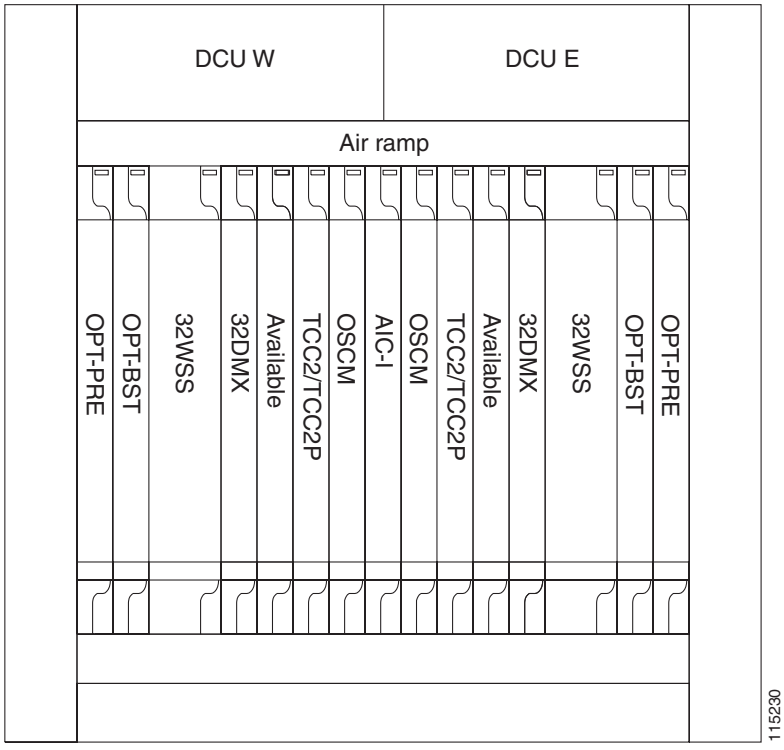

If the ROADM node receives a tilted optical signal, you can replace the single-slot 32DMX card with the double-slot 32DMX-O card to equalize the signal at the optical channel layer instead of the transport section layer. However, if 32DMX-O cards are installed, Slots 6 and 12 cannot be used for TXP or MXP cards. Figure 15-6 shows an example of an ROADM with 32DMX-O cards installed.

Figure 15-9 ROADM Node with BST-PRE, OPT-BST, and 32DMX-O Cards Installed

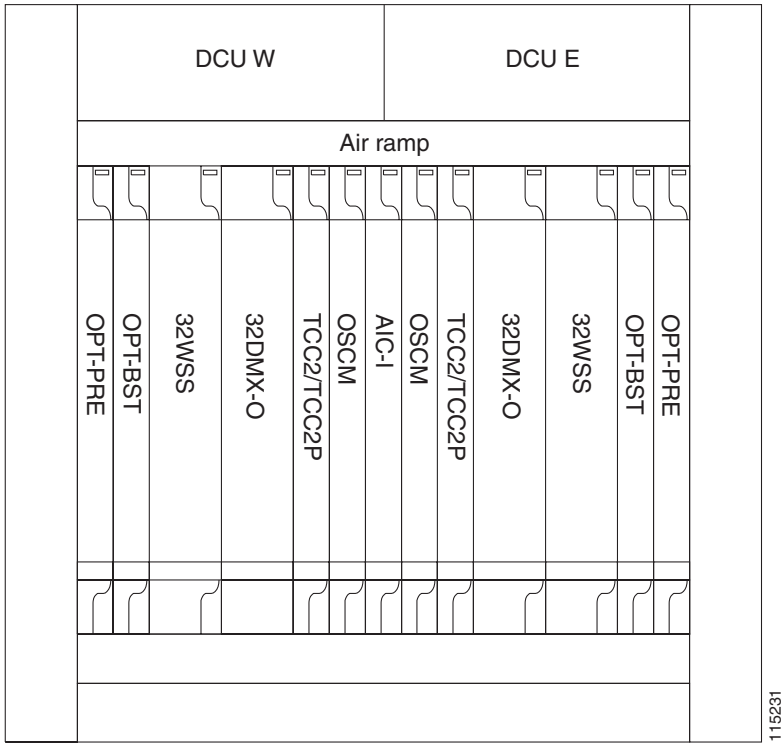

Figure 15-10 shows an example of a reconfigurable OADM east-to-west optical signal flow. The west-to-east optical signal flow follows an identical path through the west OSC-CSM and west 32WSS modules. In this example, OSC-CSM modules are installed so OPT-BST modules are not needed.

Figure 15-10 ROADM East to West Optical Signal Flow Example

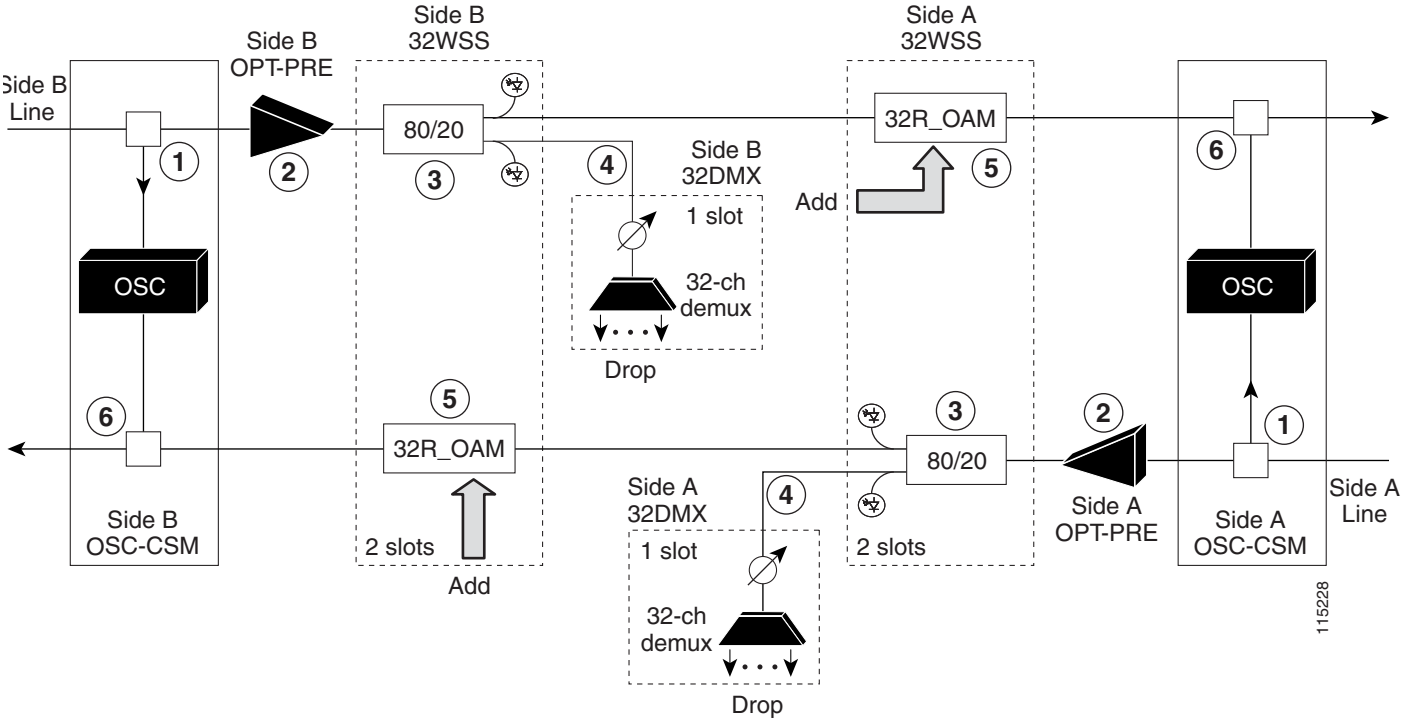

1	The OSC-CSM receives the optical signal. It separates the optical service channel from the optical payload and sends the payload to the OPT-PRE module.
2	The OPT-PRE compensates for chromatic dispersion, amplifies the optical payload, and sends it to the 32WSS.
3	The 32WSS splits the signal into two components, one is sent to the DROP-TX port and the other is sent to the EXP-TX port.
4	The drop component goes to the 32DMX where it is attenuated, de-multiplexed, and dropped.
5	The express wavelength set goes to the 32WSS on the other side where it is de-multiplexed. Channels are stopped or forwarded based upon their switch states. Forwarded wavelengths are multiplexed and sent to the OSC-CSM module.
6	The OSC-CSM combines the multiplexed payload with the OSC and sends the signal out the transmission line.

15.1.5 Anti-ASE Node

In a meshed ring network, the ONS 15454 requires a node configuration that prevents amplified spontaneous emission (ASE) accumulation and lasing. An anti-ASE node can be created by configuring a hub node or an OADM node with some modifications. No channels can travel through the express path, but they can be demultiplexed and dropped at the channel level on one side and added and multiplexed on the other side.

The hub node is the preferred node configuration when some channels are connected in pass-through mode. For rings that require a limited number of channels, combine AD-xB-xx.x and 4MD-xx.x cards, or cascade AD-xC-xx.x cards. See Figure 15-5 on page 15-6.

Figure 15-11 shows an anti-ASE node that uses all wavelengths in the pass-through mode. Use Cisco MetroPlanner to determine the best configuration for anti-ASE nodes.

Figure 15-11 Anti-ASE Node Channel Flow Example

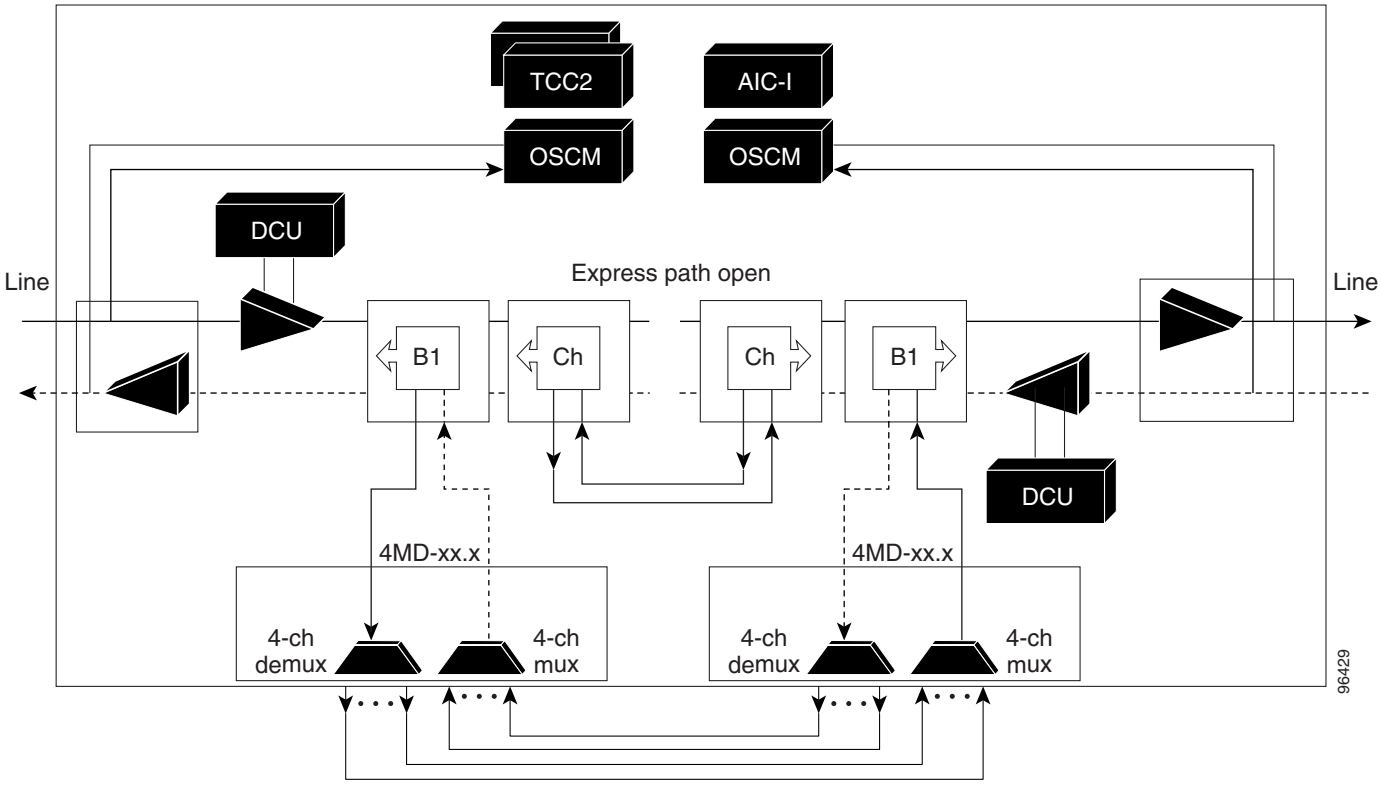

15.1.6 Line Amplifier Node

A line amplifier node is a single ONS 15454 node equipped with OPT-PRE amplifiers or OPT-BST amplifiers and TCC2 cards. Attenuators might also be required between each preamplifier and booster amplifier to match the optical input power value and to maintain the amplifier gain tilt value.

Two OSCM cards are connected to the east or west ports of the booster amplifiers to multiplex the optical service channel (OSC) signal with the pass-though channels. If the node does not contain OPT-BST amplifiers, you must use OSC-CSM cards rather than OSCM cards in your configuration. Figure 15-12 shows an example of a line node configuration.

Figure 15-12 Line Amplifier Node Configuration Example

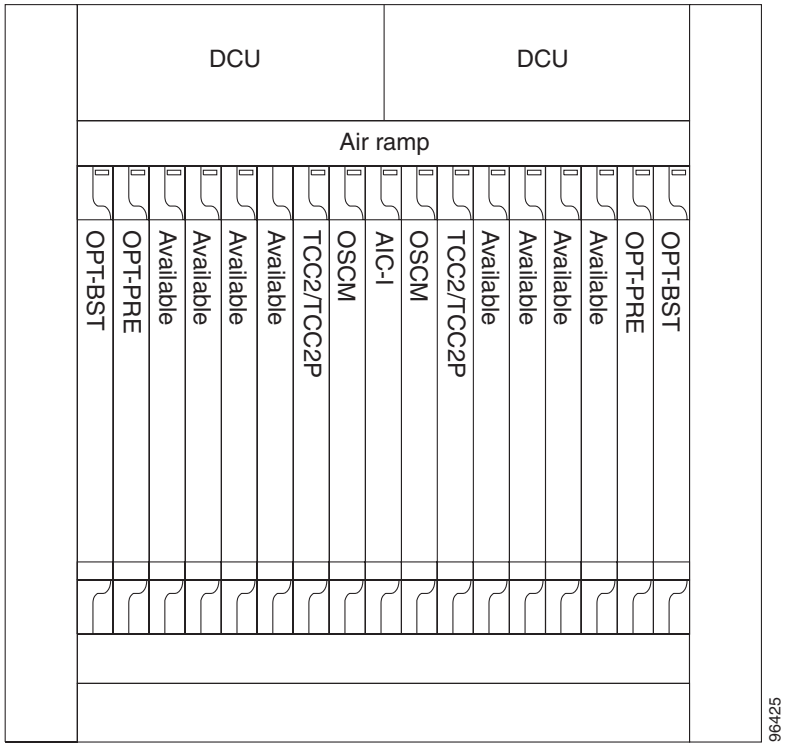

15.1.7 OSC Regeneration Node

The OSC regeneration node is added to the DWDM networks for two purposes:

- To electrically regenerate the OSC channel whenever the span links are 37 dB or longer and payload amplification and add/drop capabilities are not present. Cisco MetroPlanner places an OSC regeneration node in spans longer than 37 dB. 31 dB is the longest span between the OSC regeneration node and the next DWDM network site.
- To add data communications network (DCN) capability wherever needed within the network.

OSC regeneration nodes require two OSC-CSM cards, as shown in Figure 15-13.

Figure 15-13 OSC Regeneration Line Node Configuration Example

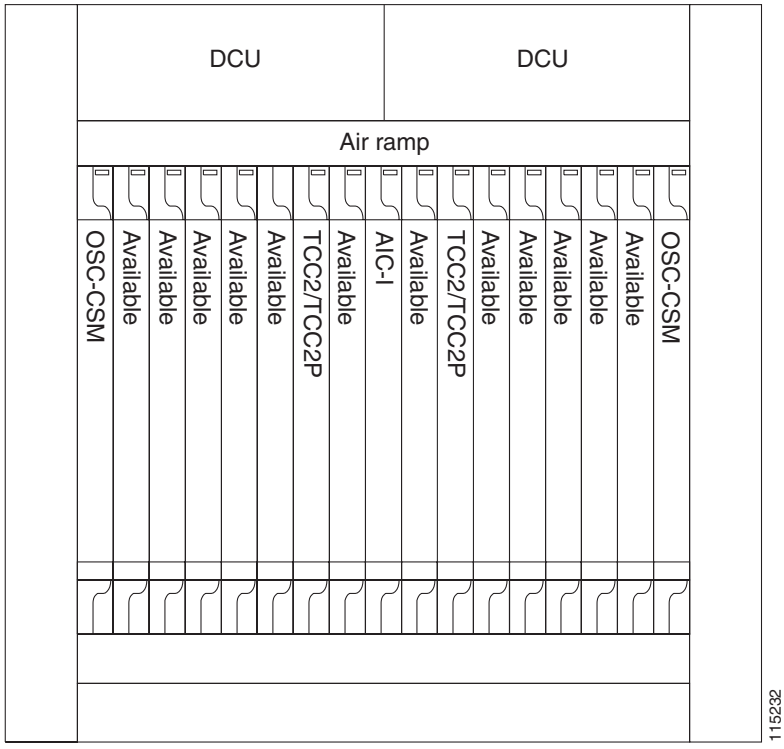

Figure 15-14 shows the OSC regeneration node OSC signal flow.

Figure 15-14 OSC Regeneration Line Site Example

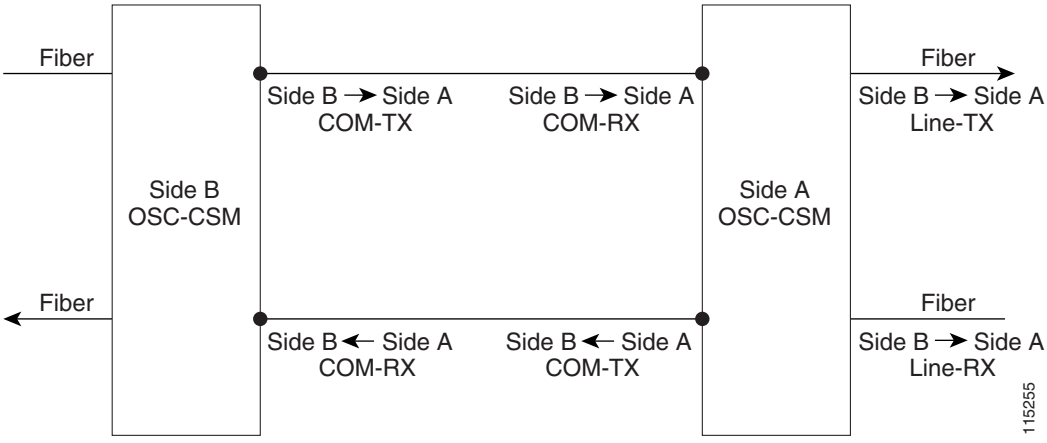

15.2 Automatic Power Control

The ONS 15454 automatic power control (APC) feature performs the following functions:

- Maintains constant per-channel power when changes to the number of channels occur.
- Compensates for optical network degradation (aging effects).
- Simplifies the installation and upgrade of DWDM optical networks by automatically calculating the amplifier setpoints.

Note APC functions are performed by software algorithms on the OPT-BST, OPT-PRE, and TCC2 cards.

Amplifier software uses a control gain loop with fast transient suppression to keep the channel power constant regardless of any changes in the number of channels. Amplifiers monitor the changes to the input power and change the output power according to the calculated gain setpoint. The shelf controller software emulates the control output power loop to adjust for fiber degradation. To perform this function, the TCC2 needs to know the channel distribution, which is provided by a signaling protocol, and the expected per-channel power, which you can provision. The TCC2 compares the actual amplifier output power with the expected amplifier output power and modifies the setpoints if any discrepancies occur.

15.2.1 APC at the Amplifier Card Level

In constant gain mode, the amplifier power out control loop performs the following input and output power calculations, where G represents the gain and t represents time.

Pout (t) = G * Pin (t) (mW)

Pout (t) = G + Pin (t) (dB)

In a power-equalized optical system, the total input power is proportional to the number of channels. The amplifier software compensates for any variation of the input power due to changes in the number of channels carried by the incoming signal.

Amplifier software identifies changes in the read input power in two different instances, t1 and t2 as a change in the carried traffic. The letters m and n in the following formula represent two different channel numbers. Pin/ch represents the per-channel input power:

Pin (t1)= nPin/ch

Pin (t2) = mPin/ch

Amplifier software applies the variation in the input power to the output power with a reaction time that is a fraction of a millisecond. This keeps the power constant on each channel at the output amplifier, even during a channel upgrade or a fiber cut.

Amplifier parameters are configured using east and west conventions for ease of use. Selecting west provisions parameters for the preamplifier receiving from the west and the booster amplifier transmitting to the west. Selecting east provisions parameters for the preamplifiers receiving from the east and the booster amplifier transmitting to the east.

Starting from the expected per-channel power, the amplifiers automatically calculate the gain setpoint after the first channel is provisioned. An amplifier gain setpoint is calculated in order to make it equal to the loss of the span preceding the amplifier itself. After the gain is calculated, the setpoint is no longer changed by the amplifier. Amplifier gain is recalculated every time the number of provisioned channels returns to zero. If you need to force a recalculation of the gain, move the number of channels back to zero.

15.2.2 APC at the Node and Network Levels

The amplifier adjusts the gain to compensate for span loss. Span loss changes due to aging fiber and components, or changes in operating conditions. To correct the gain or express variable optical attenuator (VOA) setpoints, APC calculates the difference between the power value read by the photodiodes and the expected power value. The expected power values is calculated using:

- Provisioned per-channel power value
- Channel distribution (the number of express, add, and drop channels in the node)
- ASE estimation

Channel distribution is determined by the sum of the provisioned and failed channels. Information about provisioned wavelengths is sent to APC on the applicable nodes during circuit creation. Information about failed channels is collected through a signaling protocol that monitors alarms on ports in the applicable nodes and distributes that information to all the other nodes in the network.

ASE calculations purify the noise from the power level reported from the photodiode. Each amplifier can compensate for its own noise, but cascaded amplifiers cannot compensate for ASE generated by preceding nodes. The ASE effect increases when the number of channels decreases; therefore, a correction factor must be calculated in each amplifier of the ring to compensate for ASE build-up.

APC is a network-level feature. The APC algorithm designates a master node that is responsible for starting APC hourly or every time a new circuit is provisioned or removed. Every time the master node signals for APC to start, gain and VOA setpoints are evaluated on all nodes in the network. If corrections are needed in different nodes, they are always performed sequentially following the optical paths starting from the master node.

APC corrects the power level only if the variation exceeds the hysteresis thresholds of +/– 0.5 dB. Any power level fluctuation within the threshold range is skipped since it is considered negligible. Because APC is designed to follow slow time events, it skips corrections greater than 3 dB. This is the typical total aging margin that is provisioned during the network design phase. After you provision the first channel or the amplifiers are turned up for the first time, APC does not apply the 3 dB rule. In this case, APC corrects all the power differences to turn up the node.

Note Software R4.7 does not report corrections that are not performed and exceed the 3 dB correction factor to management interfaces (Cisco Transport Controller [CTC], Cisco Transport Manager [CTM], and Transaction Language One [TL1]).

To avoid large power fluctuations, APC adjusts power levels incrementally. The maximum power correction is +/– 0.5 dB. This is applied to each iteration until the optimal power level is reached. For example, a gain deviation of 2 dB is corrected in four steps. Each of the four steps requires a complete APC check on every node in the network. APC can correct up to a maximum of 3 dB on an hourly basis. If degradation occurs over a longer time period, APC will compensate for it by using all margins that you provision during installation.

When no margin is available, adjustments cannot be made because setpoints exceed ranges. APC communicates the event to CTC, CTM, and TL1 through an APC Fail condition. APC will clear the APC fail condition when the setpoints return to the allowed ranges.

APC automatically disables itself when:

- A HW FAIL alarm is raised by any card in any of the network nodes.
- A Mismatch Equipment Alarm (MEA) is raised by any card in any of the network nodes.
- An Improper Removal alarm is raised by any card in any of the network nodes.

- Gain Degrade, Power Degrade, and Power Fail Alarms are raised by the output port of any amplifier card in any of the network nodes.
- A VOA degrade or Fail alarm is raised by any of the cards in any of the network nodes.

The APC state (Enable/Disable) is located on every node and can be retrieved by the CTC or TL1 interfaces. If an event that disables APC occurs in one of the network nodes, APC is disabled on all the others and the APC state changes to DISABLE - INTERNAL. The disabled state is raised only by the node where the problem occurred to simplify troubleshooting.

APC raises the following standing conditions at the port level in CTC, TL1, and SNMP:

- APC Out of Range—APC cannot assign a new setpoint for a parameter this is allocated to a port because the new setpoint exceeds the parameter range.
- APC Correction Skipped—APC skipped a correction to one parameter allocated to a port because the difference between the expected and current values exceeds the +/– 3 dB security range.

After the error condition is cleared, signaling protocol enables APC on the network and the APC DISABLE - INTERNAL condition is cleared. Because APC is required after channel provisioning to compensate for ASE effects, all optical channel network connection (OCHNC) circuits that you provision during the disabled APC state are kept in the Out-of-Service and Autonomous, Automatic In-Service (OOS-AU,AINS [ANSI]) or Unlocked-disabled,automaticInService (ETSI) service state until APC is enabled. OCHNCs automatically go into the In-Service and Normal (IS-NR [ANSI]) or Unlocked-enabled (ETSI) service state only after APC is enabled.

15.2.3 Managing APC

The automatic power control status is indicated by four APC states shown in the node view status area:

- Enable—APC is enabled.
- Disable - Internal—APC has been automatically disabled for an internal cause.
- Disable - User—APC was disabled manually by a user.
- Not Applicable—The node is provisioned to Metro Access or Not DWDM, which do not support APC.

You can view the automatic power control information and disable and enable APC manually on the Maintenance > DWDM > APC subtab (Figure 15-15).

Caution When APC is disabled, aging compensation is not applied and circuits cannot be activated. Do not disable APC unless it is required for specific maintenance or troubleshooting tasks. Always enable APC as soon as the tasks are completed.

Figure 15-15 Automatic Power Control

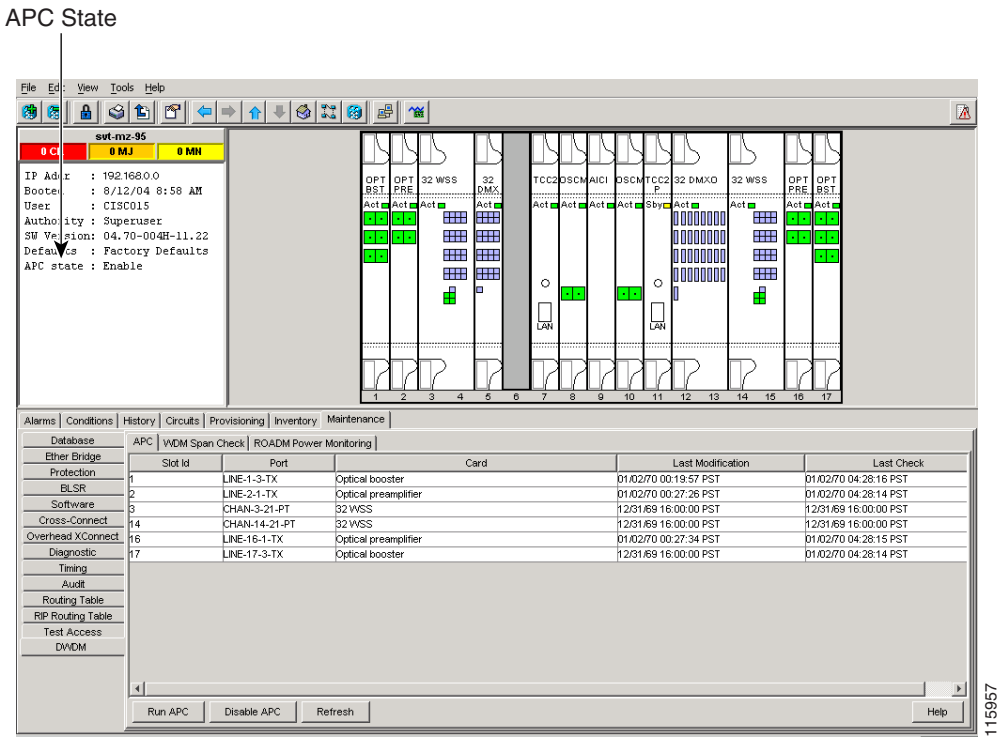

The APC subtab provides the following information:

- Slot ID—The ONS 15454 slot number for which APC information is shown.
- Port—The port number for which APC information is shown.
- Card—The card for which power control information is shown.
- Last Modification—Date and time APC last modified a setpoint for the parameters shown in Table 15-1.
- Last Check—Date and time APC last verified the setpoints for the parameters shown in Table 15-1.

Table 15-1 APC-Managed Parameters

Card	Port	Parameters
OPT-BST	LINE-3-TX	• Gain • Total Signal Output Power
OPT-PRE	LINE-1-TX	• Gain • Total Signal Output Power
AD-xB-xx.x	LINE-1-TX BAND-i-TX	VOA Target Attenuation
AD-1C-xx.x AD-2C-xx.x	LINE-1-TX	VOA Target Attenuation

Table 15-1 APC-Managed Parameters (continued)

Card	Port	Parameters
AD-4C-xx.x	LINE-1-TX CHAN-i-TX	VOA Target Attenuation
32-DMX	LINE-1-TX	VOA Target Attenuation

15.3 ROADM Power Equalization Monitoring

Reconfigurable OADM (ROADM) nodes allow you to monitor the 32WSS card equalization functions on the Maintenance > DWDM > Power Monitoring subtab (Figure 15-16). The tab shows the input channel power (Padd), the express or pass-through (Ppt) power and the power level at output (Pout).

Figure 15-16 Power Monitoring Subtab

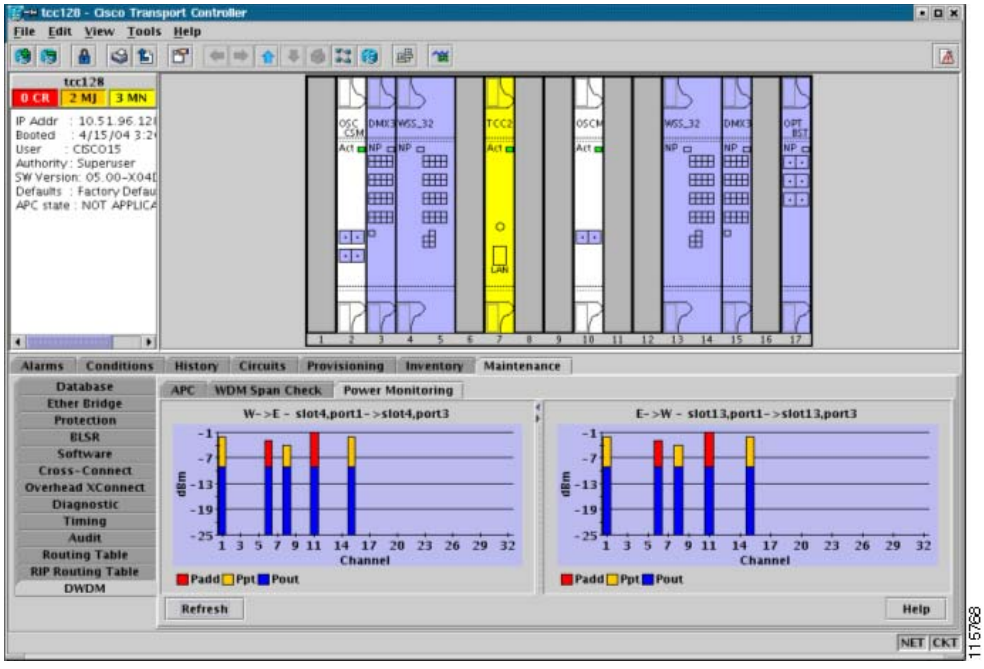

15.4 Span Loss Verification

Span loss measurements can be performed from the Maintenance > DWDM > WDM Span Check subtab (Figure 15-17). The CTC span check compares the far-end OSC power with the near-end OSC power. A "Span Loss Out of Range" condition is raised when the measured span loss is higher than the maximum expected span loss. It is also raised when the measured span loss is lower than the minimum expected span loss and the difference between the minimum and maximum span loss values is greater than 1 dB. The minimum and maximum expected span loss values are calculated by Cisco MetroPlanner for the network and imported into CTC. However, you can manually change the minimum and expected span loss values.

CTC span loss measurements provide a quick span loss check and are useful whenever changes to the network occur, for example after you install equipment or repair a broken fiber. CTC span loss measurement resolutions are:

- +/– 1.5 dB for measured span losses between 0 and 25 dB
- +/– 2.5 dB for measured span losses between 25 and 38 dB

For ONS 15454 span loss measurements with higher resolutions, an optical time domain reflectometer (OTDR) must be used.

Figure 15-17 Span Loss Verification

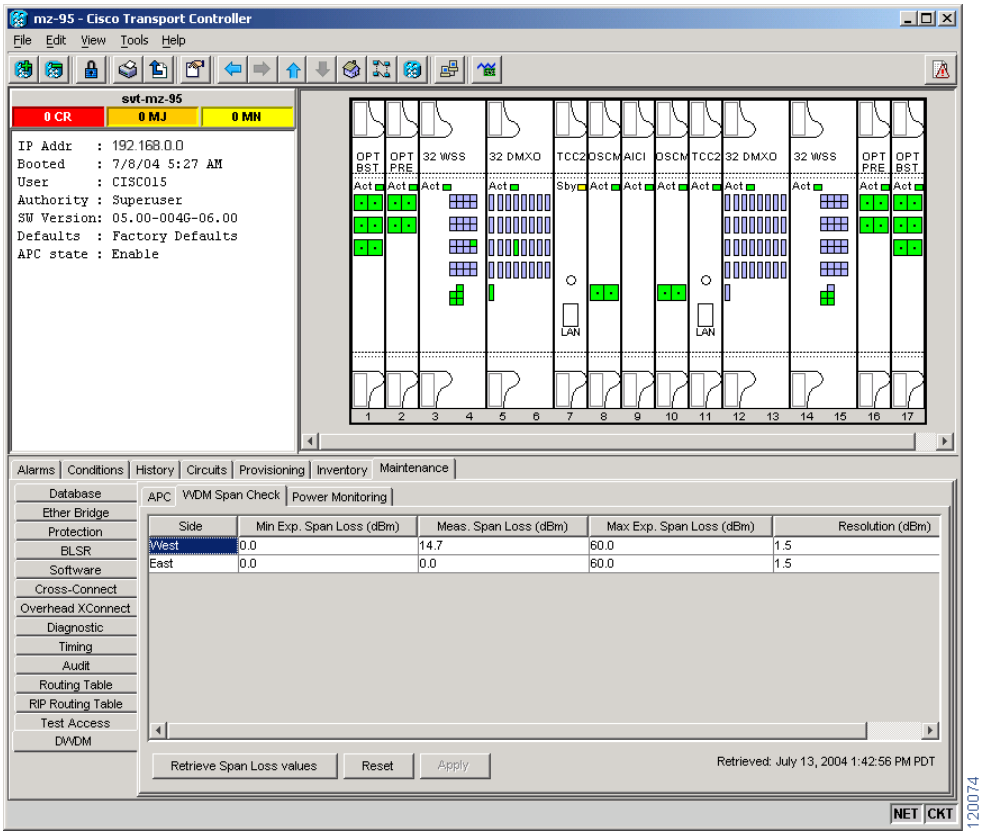

15.5 Automatic Node Setup

Automatic node setup (ANS) is a TCC2 function that adjusts values of the VOAs on the DWDM channel paths to equalize the per-channel power at the amplifier input. This power equalization means that at launch, all the channels have the same amplifier power level, independent from the input signal on the client interface and independent from the path crossed by the signal inside the node. This equalization is needed for two reasons:

- Every path introduces a different penalty on the signal that crosses it.
- Client interfaces add their signal to the ONS 15454 DWDM ring with different power levels.

To support ANS, the integrated VOAs and photodiodes are provided in the following ONS 15454 DWDM cards:

- OADM band cards (AD-xB-xx.x) express and drop path
- OADM channel cards (AD-xC-xx.x) express and add path
- 4-Channel Terminal Multiplexer/Demultiplexer (4MD-xx.x) input port
- 32-Channel Terminal Multiplexer (32MUX-O) input port
- 32-Channel Wavelength Selective Switch (32WSS) input port
- 32-Channel Terminal Demultiplexer (32DMX-O and 32DMX) output port

Optical power is equalized by regulating the VOAs. Based on the expected per-channel power, ANS automatically calculates the VOA values by:

- Reconstructing the different channels paths
- Retrieving the path insertion loss (stored in each DWDM transmission element)

VOAs operate in one of three working modes:

- Automatic VOA Shutdown—In this mode, the VOA is set at maximum attenuation value. Automatic VOA shutdown mode is set when the channel is not provisioned to ensure system reliability in the event that power is accidentally inserted.
- Constant Attenuation Value—In this mode, the VOA is regulated to a constant attenuation independent from the value of the input signal. Constant attenuation value mode is set on the following VOAs:
  - OADM band card VOAs on express and drop paths (as operating mode)
  - OADM channel card VOAs during power insertion startup
  - The multiplexer/demultiplexer card VOAs during power insertion startup
- Constant Power Value—In this mode, the VOA values are automatically regulated to keep a constant output power when changes occur to the input power signal. This working condition is set on OADM channel card VOAs as “operating” and on 32MUX-O, 32WSS, 32DMX-O, and 32DMX card VOAs as “operating mode.”

In the normal operating mode, OADM band card VOAs are set to a constant attenuation, while OADM channel card VOAs are set to a constant power. ANS requires the following VOA provisioning parameters to be specified:

- Target attenuation (OADM band card VOA and OADM channel card startup)
- Target power (channel VOA)

To allow you to modify ANS values based on your DWDM deployment, provisioning parameters are divided into two contributions:

- Reference Contribution (read only)—Set by ANS.
- Calibration Contribution (read and write)—Set by user.

The ANS equalization algorithm requires the following knowledge of the DWDM transmission element layout:

- The order in which the DWDM elements are connected together on the express paths
- Channels that are dropped and added
- Channels or bands that have been configured as pass through

ANS assumes that every DWDM port has a line direction parameter that is either west to east (W-E) or east to west (E-W). ANS automatically configures the mandatory optical connections according to following main rules:

- Cards equipped in Slots 1 to 6 have a drop section facing west.
- Cards equipped in Slots 12 to 17 have a drop section facing east.
- Contiguous cards are cascaded on the express path.
- 4MD-xx.x and AD-xB-xx.x are always optically coupled.
- A 4MD-xx.x absence forces an optical pass-through connection.
- Transmit (Tx) ports are always connected to receive (Rx) ports.

Optical patch cords are passive devices that are not autodiscovered by ANS. However, optical patch cords are used to build the alarm correlation graph. From CTC or TL1 you can:

- Calculate the default connections on the NE.
- Retrieve the list of existing connections.
- Retrieve the list of free ports.
- Create new connections or modify existing ones.
- Launch ANS.

After you launch ANS, the following status are provided for each ANS parameter:

- Success - Changed—The parameter setpoint was recalculated successfully.
- Success - Unchanged—The parameter setpoint did not need recalculation.
- Not Applicable—The parameter setpoint does not apply to this node type.
- Fail - Out of Range—The calculated setpoint is outside the expected range.
- Fail - Port in IS State—The parameter could not be calculated because the port is in-service.

Optical connections are identified by the two termination points, each with an assigned slot and port. ANS checks that a new connection is feasible (according to embedded connection rules) and returns a denied message in the case of a violation.

ANS requires provisioning of the expected wavelength. When provisioning the expected wavelength, the following rules apply:

- The card name is generically characterized by the card family, and not the particular wavelengths supported (for example, AD-2C for all 2-channel OADMs).
- At the provisioning layer, you can provision a generic card for a specific slot using CTC or TL1.
- Wavelength assignment is done at the port level.
- An equipment mismatch alarm is raised when a mismatch between the identified and provisioned value occurs. The default value for the provisioned attribute is AUTO.

15.5.1 Automatic Node Setup Parameters

All ONS 15454 ANS parameters are calculated by Cisco MetroPlanner for nodes configured for metro core networks. (Parameters must be configured manually for metro access nodes.) Cisco MetroPlanner exports the calculated parameters to an ASCII file called “NE Update.” In CTC, you can import the NE Update file to automatically provision the node. Table 15-2 shows ANS parameters arranged in east and west, transmit and receive groups.

Table 15-2 ANS Parameters

Direction	ANS Parameters
West Side - Receive	• West Side Rx Max Expected Span Loss • West Side Rx Min Expected Span Loss • West Side Rx Amplifier Working Mode • West Side Rx Amplifier Ch Power • West Side Rx Amplifier Gain • West Side Rx Amplifier Tilt • West Side OSC LOS Threshold • West Side Channel LOS Threshold • West Side Rx Amplifier Input Power Fail Th • West Side Add and Drop Stage Input Power • West Side Add and Drop Stage Drop Power • West Side Add and Drop Stage Band (i) Drop Power (i = 1..8) • West Side Add and Drop Stage Channel (i) Drop Power (i = 1..32)
East Side - Receive	• East Side Rx Max Expected Span Loss • East Side Rx Min Expected Span Loss • East Side Rx Amplifier Working Mode • East Side Rx Amplifier Ch Power • East Side Rx Amplifier Gain • East Side Rx Amplifier Tilt • East Side OSC LOS Threshold • East Side Channel LOS Threshold • East Side Rx Amplifier Input Power Fail Th • East Side Add and Drop Stage Input Power • East Side Add and Drop Stage Drop Power • East Side Add and Drop Stage Band (i) Drop Power (i = 1..8 • East Side Add and Drop Stage Channel (i) Drop Power (i = 1..32)

Table 15-2 ANS Parameters (continued)

Direction	ANS Parameters
West Side - Transmit	• West Side Tx Amplifier Working Mode • West Side Tx Amplifier Ch Power • West Side Tx Amplifier Gain • West Side Tx Amplifier Tilt • West Side Fiber Stage Input Threshold • West Side Add and Drop Stage Output Power • West Side Add and Drop Stage By-Pass Power
East Side - Transmit	• East Side Tx Amplifier Working Mode • East Side Tx Amplifier Ch Power • East Side Tx Amplifier Gain • East Side Tx Amplifier Tilt • East Side Fiber Stage Input Threshold • East Side Add and Drop Stage Output Power • East Side Add and Drop Stage By-Pass Power

15.5.2 Viewing and Provisioning ANS Parameters

All ANS parameters can be viewed and provisioned from the node view Provisioning > WDM-ANS > Provisioning subtab, shown in Figure 15-18. The WDM-ANS > Provisioning > Provisioning subtab presents the parameters in the following tree view:

root

+/– East

- +/– Receiving
  - +/– Amplifier
  - +/– Power
  - +/– Threshold
- +/– Transmitting
  - +/– Amplifier
  - +/– Power
  - +/– Threshold

+/– West

- +/– Receiving
  - +/– Amplifier
  - +/– Power
  - +/– Threshold
- +/– Transmitting

- +/– Amplifier
- +/– Power
- +/– Threshold

Figure 15-18 WDM-ANS Provisioning

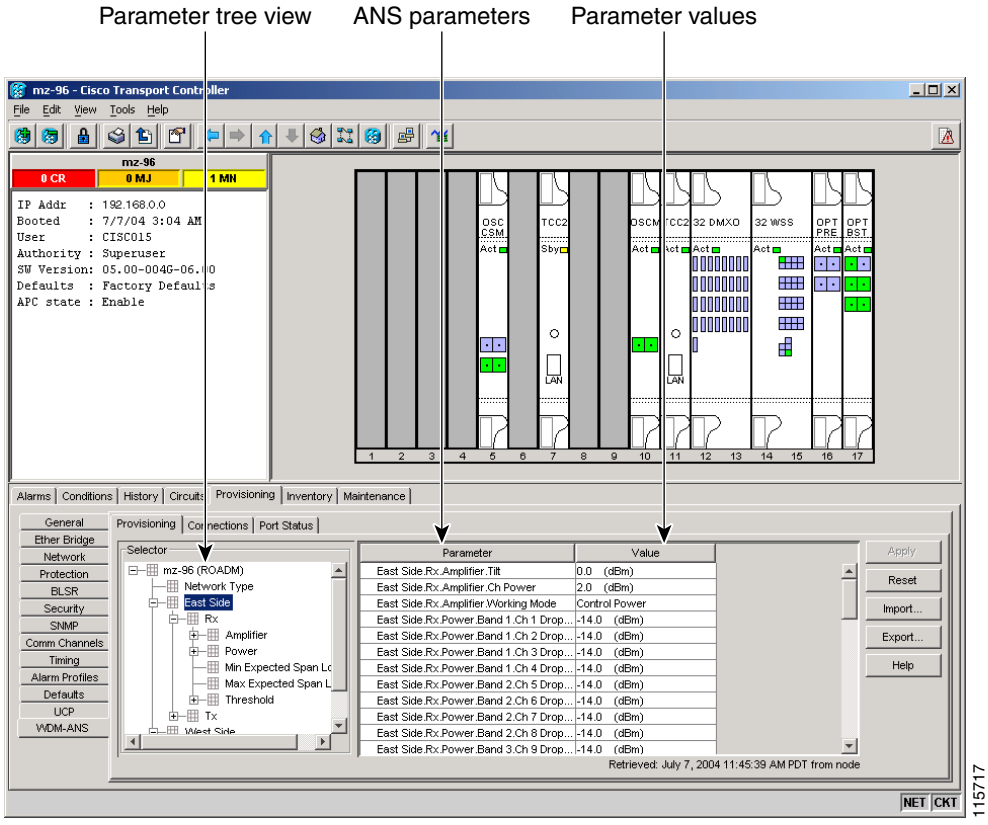

Table 15-3 shows the parameter IDs based on platform, line-direction, and functional group.

Table 15-3 ANS-WDM > Provisioning Subtab Parameters

Tree Element	Parameters
root	Network Type (dwdm)
root +/– East +/– Receiving	East Side Rx Max Expected Span Loss East Side Rx Min Expected Span Loss
root +/– East +/– Receiving +/– Amplifier	East Side Rx Amplifier Working Mode East Side Rx Amplifier Ch Power East Side Rx Amplifier Gain East Side Rx Amplifier Tilt

Table 15-3 ANS-WDM > Provisioning Subtab Parameters (continued)

Tree Element	Parameters
root +/– East +/– Receiving +/– Power	East Side Add and Drop Input Power East Side Add and Drop Drop Power East Side Band n Drop Power (n = 1-8) East Side Channel n Drop Power East (n = 1-32)
root +/– East +/– Receiving +/– Thresholds	East Side OSC LOS Threshold East Side Channel LOS Threshold East Side Rx Amplifier In Power Fail Th
root +/– East +/– Transmitting +/– Amplifier	East Side Tx Amplifier Working Mode East Side Tx Amplifier Ch Power East Side Tx Amplifier Gain East Side Tx Amplifier Tilt
root +/– East +/– Transmitting +/– Power	East Side Add and Drop Output Power East Side Add and Drop By-Pass Power
root +/– East +/– Transmitting +/– Thresholds	East Side Fiber Stage Input Threshold
root +/– West +/– Receiving	West Side Rx Max Expected Span Loss West Side Rx Min Expected Span Loss
root +/– West +/– Receiving +/– Amplifier	West Side Rx Amplifier Working Mode West Side Rx Amplifier Ch Power West Side Rx Amplifier Gain West Side Rx Amplifier Tilt
root +/– West +/– Receiving +/– Power	West Side Add and Drop Input Power West Side Add and Drop Drop Power West Side Band n Drop Power (n = 1-8) West Side Channel n Drop Power (n = 1-32)
root +/– West +/– Receiving +/– Thresholds	West Side OSC LOS Threshold West Side Channel LOS Threshold West Side Rx Amplifier In Power Fail Th
root +/– West +/– Transmitting +/– Amplifier	West Side Tx Amplifier Working Mode West Side Tx Amplifier Ch Power West Side Tx Amplifier Gain West Side Tx Amplifier Tilt
root +/– East +/– Transmitting +/– Power	West Side Add and Drop Output Power West Side Add and Drop By-Pass Power
root +/– West +/– Transmitting +/– Thresholds	West Side Fiber Stage Input Threshold

The ANS parameters that appear in the WDM-ANS > Provisioning subtab depend on the node type. Table 15-4 shows the DWDN node types and their ANS parameters.

Table 15-4 ANS Parameters By Node Type

Node Type	Parameter Group	Parameters
Hub	Network	Network Type
	Span Loss	East and West Expected Span Loss
	Amplifier Tx	East and West Side Transmit Amplifier Working Mode
		East and West Side Transmit Amplifier Channel Power
		East and West Side Transmit Amplifier Gain
		East and West Side Transmit Amplifier Tilt
	Amplifier Rx	East and West Side Receive Amplifier Working Mode
		East and West Side Receive Amplifier Channel Power
		East and West Side Receive Amplifier Gain
		East and West Side Receive Amplifier Tilt
	Thresholds Tx	East and West Side Fiber Stage Input Threshold
	Thresholds Rx	East and West Side Osc Los Threshold
		East and West Side Channel Los Threshold
		East and West Side Receive Amplifier Input Power Fail
	Power	East and West Side Add and Drop Input Power
		East and West Side Add and Drop Output Power
		East and West Side Add and Drop By-Pass Power
		East and West Side Channel (n) Drop Power

Table 15-4 ANS Parameters By Node Type (continued)

Node Type	Parameter Group	Parameters
Terminal	Network	Network Type
	Span Loss	East or West Expected Span Loss
	Amplifier Tx	East or West Side Transmit Amplifier Working Mode East or West Side Transmit Amplifier Channel Power East or West Side Transmit Amplifier Gain East or West Side Transmit Amplifier Tilt
	Amplifier Rx	East or West Side Receive Amplifier Working Mode East or West Side Receive Amplifier Channel Power East or West Side Receive Amplifier Gain East or West Side Receive Amplifier Tilt
	Thresholds Tx	East or West Side Fiber Stage Input Threshold
	Thresholds Rx	East or West Side Osc Los Threshold East or West Side Channel Los Threshold East or West Side Receive Amplifier Input Power Fail
	Power	East or West Side Add and Drop Input Power East or West Side Add and Drop Output Power East or West Side Channel (n) Drop Power (n = 1-32)
Flexible Channel Count Terminal	Network	Network Type
	Span Loss	East and West Expected Span Loss
	Amplifier Tx	East and West Side Transmit Amplifier Working Mode East and West Side Transmit Amplifier Channel Power East and West Side Transmit Amplifier Gain East and West Side Transmit Amplifier Tilt
	Amplifier Rx	East and West Side Receive Amplifier Working Mode East and West Side Receive Amplifier Channel Power East and West Side Receive Amplifier Gain East and West Side Receive Amplifier Tilt
	Thresholds Tx	East and West Side Fiber Stage Input Threshold
	Thresholds Rx	East and West Side Osc Los Threshold East and West Side Channel Los Threshold East and West Side Receive Amplifier Input Power Fail
	Power	East and West Side Add and Drop Input Power East and West Side Add and Drop Output Power East and West Side Band (n) Drop Power (n = 1-8)

Table 15-4 ANS Parameters By Node Type (continued)

Node Type	Parameter Group	Parameters
OADM	Network	Network Type
	Span Loss	East and West Expected Span Loss
	Amplifier Tx	East and West Side Transmit Amplifier Working Mode East and West Side Transmit Amplifier Channel Power East and West Side Transmit Amplifier Gain East and West Side Transmit Amplifier Tilt
	Amplifier Rx	East and West Side Receive Amplifier Working Mode East and West Side Receive Amplifier Channel Power East and West Side Receive Amplifier Gain East and West Side Receive Amplifier Tilt
	Thresholds Tx	East and West Side Fiber Stage Input Threshold
	Thresholds Rx	East and West Side Osc Los Threshold East and West Side Channel Los Threshold East and West Side Receive Amplifier Input Power Fail
	Power	East and West Side Add and Drop Input Power East and West Side Add and Drop Output Power East and West Side Band (n) Drop Power (n = 1-8)
Line Amplifier	Network	Network Type
	Span Loss	East and West Expected Span Loss
	Amplifier Tx	East and West Side Transmit Amplifier Working Mode East and West Side Transmit Amplifier Channel Power East and West Side Transmit Amplifier Gain East and West Side Transmit Amplifier Tilt
	Amplifier Rx	East and West Side Receive Amplifier Working Mode East and West Side Receive Amplifier Channel Power East and West Side Receive Amplifier Gain East and West Side Receive Amplifier Tilt
	Thresholds Tx	East and West Side Fiber Stage Input Threshold
	Thresholds Rx	East and West Side Osc Los Threshold East and West Side Channel Los Threshold East and West Side Receive Amplifier Input Power Fail

Table 15-4 ANS Parameters By Node Type (continued)

Node Type	Parameter Group	Parameters
ROADM	Network	Network Type
	Span Loss	East and West Expected Span Loss
	Amplifier Tx	East and West Side Transmit Amplifier Working Mode East and West Side Transmit Amplifier Channel Power East and West Side Transmit Amplifier Gain East and West Side Transmit Amplifier Tilt
	Amplifier Rx	East and West Side Receive Amplifier Working Mode East and West Side Receive Amplifier Channel Power East and West Side Receive Amplifier Gain East and West Side Receive Amplifier Tilt
	Thresholds Tx	East and West Side Fiber Stage Input Threshold
	Thresholds Rx	East and West Side Osc Los Threshold East and West Side Channel Los Threshold East and West Side Receive Amplifier Input Power Fail
	Power	East and West Side Add and Drop Input Power (if 32DMX East/West is installed) East and West Side Add and Drop Output Power East and West Side Add and Drop Drop Power (if 32DMX East/West is installed) East and West Side Channel (n) Drop Power (if 32DMX-O East/West is installed)

Table 15-5 shows the following information for all ONS 15454 ANS parameters:

- Min—Minimum value in decibels.
- Max—Maximum value in decibels.
- Def—Default value in decibels. Other defaults include MC (metro core), CG (control gain), U (unknown).
- Group—Group(s) to which the parameter belongs: ES (east side), WS (west side), Rx (receive), Tx (transmit), Amp (amplifier), P (power), DB (drop band), DC (drop channel), A (attenuation), Th (threshold).
- Network Type—Parameter network type: MC (metro core), MA (metro access), ND (not DWDM)
- Optical Type—Parameter optical type: TS (32 channel terminal), FC (flexible channel count terminal), O (OADM), H (hub), LS (line amplifier), R (ROADM), U (unknown)

Table 15-5 ANS Parameters Summary

General Name	Min	Max	Def	Group	Network Type	Optical Type
Network Type	–	–	MC	Root	MC, MA, ND	U, TS, FC, O, H, LS, R
West Side Rx Max Expected Span Loss	0	60	60	WS, Rx	MC, MA	TS, FC, O, H, LS, R

Table 15-5 ANS Parameters Summary (continued)

General Name	Min	Max	Def	Group	Network Type	Optical Type
East Side Rx Max Expected Span Loss	0	60	60	ES, Rx	MC, MA	TS, FC, O, H, LS, R
West Side Rx Min Expected Span Loss	0	60	60	WS, Rx	MC, MA	TS, FC, O, H, LS, R
East Side Rx Min Expected Span Loss	0	60	60	ES, Rx	MC, MA	TS, FC, O, H, LS, R
West Side Tx Amplifier Working Mode	–	–	CG	WS, Tx, Amp	MC, MA, ND	TS, FC, O, H, LS, R
East Side Tx Amplifier Working Mode	–	–	CG	ES, Rx	MC, MA	TS, FC, O, H, LS, R
West Side Rx Amplifier Working Mode	–	–	CG	WS, Tx, Amp	MC, MA, ND	TS, FC, O, H, LS, R
East Side Rx Amplifier Working Mode	–	–	CG	ES, Rx	MC, MA	TS, FC, O, H, LS, R
West Side Tx Amplifier Ch Power	–10	17	2	WS, Tx, Amp	MC, MA, ND	TS, FC, O, H, LS, R
East Side Tx Amplifier Ch Power	–10	17	2	WS, Tx, Amp	MC, MA, ND	TS, FC, O, H, LS, R
West Side Rx Amplifier Ch Power	–10	17	2	WS, Tx, Amp	MC, MA, ND	TS, FC, O, H, LS, R
East Side Rx Amplifier Ch Power	–10	17	2	WS, Tx, Amp	MC, MA, ND	TS, FC, O, H, LS, R
West Side Tx Amplifier Gain	0	30	0	WS, Tx, Amp	MA	TS, FC, O, H, LS, R
East Side Tx Amplifier Gain	0	30	0	WS, Tx, Amp	MA	TS, FC, O, H, LS. R
West Side Rx Amplifier Gain	0	30	0	WS, Tx, Amp	MA	TS, FC, O, H, LS, R
East Side Rx Amplifier Gain	0	30	0	WS, Tx, Amp	MA	TS, FC, O, H, LS, R
West Side Tx Amplifier Tilt	0	30	0	WS, Tx, Amp	MC, MA	TS, FC, O, H, LS, R
East Side Tx Amplifier Tilt	0	30	0	WS, Tx, Amp	MC, MA	TS, FC, O, H, LS, R
West Side Rx Amplifier Tilt	0	30	0	WS, Rx, Amp	MC, MA	TS, FC, O, H, LS, R
East Side Rx Amplifier Tilt	0	30	0	WS, Rx, Amp	MC, MA	TS, FC, O, H, LS, R
West Side OSC LOS Threshold	–50	30	U	WS, Rx, Th	MC, MA	TS, FC, O, H, LS, R
East Side OSC LOS Threshold	–50	30	U	WS, Rx, Th	MC, MA	TS, FC, O, H, LS, R
West Side Channel LOS Threshold	–50	30	U	WS, Rx, Th	MC, MA	TS, FC, O, H, LS, R
East Side Channel LOS Threshold	–50	30	U	ES, Rx, Th	MC, MA, ND	TS, FC, O, H, LS, R
West Side Fiber State Input Threshold	–50	30	U	WS, Tx, Th	MC, MA, ND	TS, FC, O, H, LS, R
East Side Fiber State Input Threshold	–50	30	U	ES, Tx, Th	MC, MA, ND	TS, FC, O, H, LS, R
West Side Add and Drop Output Power	–50	30	–14	WS, Tx, P	MC	TS, FC, O, H, R
East Side Add and Drop Output Power	–50	30	–14	ES, Tx, P	MC	TS, FC, O, H, R
West Side Add and Drop Input Power	–50	30	–14	WS, Rx, P	MC	TS, FC, O, H, R
East Side Add and Drop Input Power	–50	30	–14	ES, Rx, P	MC	TS, FC, O, H, R
West Side Add and Drop By-Pass Power	–50	30	–14	WS, Tx, P	MC	H
East Side Add and Drop By-Pass Power	–50	30	–14	ES, Tx, P	MC	H
West Side Add and Drop Drop Power	–50	30	–14	WS, Tx, P	MC	R
East Side Add and Drop Drop Power	–50	30	–14	ES, Tx, P	MC	R
West Side Band 1...8 Drop Power	–50	30	–14	WS, Rx, P, DB	MC	FC, O
East Side Band 1...8 Drop Power	–50	30	–14	ES, Rx, P, DB	MC	FC, O

Table 15-5 ANS Parameters Summary (continued)

General Name	Min	Max	Def	Group	Network Type	Optical Type
West Side Channel 1...32 Drop Power	–50	30	–14	WS, Rx, P, DC, B1	MC, MA	TS, H, R
East Side Channel 1...32 Drop Power	–50	30	–14	ES, Rx, P, DC, B1	MC, MA	TS, H, R

DWDM Network Reference

This chapter explains the ONS 15454 dense wavelength division multiplexing (DWDM) network applications and topologies. The chapter also provides network-level optical performance references.

Note Unless otherwise specified, "ONS 15454" refers to both ANSI and ETSI shelf assemblies.

Chapter topics include:

- 16.1 Network Applications, page 16-1
- 16.2 Network Topologies, page 16-1
- 16.3 Optical Performance, page 16-6
- 16.4 Network Optical Safety - Automatic Laser Shutdown, page 16-18

16.1 Network Applications

Cisco ONS 15454s can be provisioned for metro access and metro core DWDM network applications. Metro access networks are 60 km or less in size. Channels are not equalized and dispersion compensation is not applied. Metro access networks have few spans and very low span loss, so the signal link budget is the limiting factor for performance. Metro core networks can be up to 400 km in size. The channel power is equalized and dispersion compensation is applied. Metro core networks often include multiple spans and amplifiers, so the optical signal-to-noise ratio (OSNR) is the limiting factor for channel performance in metro core networks.

Within DWDM networks, the ONS 15454 uses a communications protocol, called node services protocol (NSP), to communicate with other nodes. NSP automatically updates nodes whenever a change in the network occurs. Each ONS 15454 DWDM node can:

- Identify other ONS 15454 DWDM nodes in the network.
- Identify the different types of DWDM networks.
- Identify when the DWDM network is complete and when it is incomplete.

16.2 Network Topologies

The ONS 15454 DWDM network topologies include hubbed, multihubbed, and meshed rings, and linear and single-span networks

16.2.1 Hubbed Rings

In the hubbed ring topology (Figure 16-1), a hub node terminates all the DWDM channels. A channel can be provisioned to support protected traffic between the hub node and any node in the ring. Both working and protected traffic use the same wavelength on both sides of the ring. Protected traffic can also be provisioned between any pair of optical add/drop multiplexing (OADM) nodes, except that either the working or the protected path must be regenerated in the hub node.

Protected traffic saturates a channel in a hubbed ring, that is, no channel reuse is possible. However, the same channel can be reused in difference sections of the ring by provisioning unprotected multihop traffic. From a transmission point of view, this network topology is similar to two bidirectional point-to-point links with OADM nodes.

For more information about hub nodes, see the "15.1.1 Hub Node" section on page 15-1.

Figure 16-1 Hubbed Ring

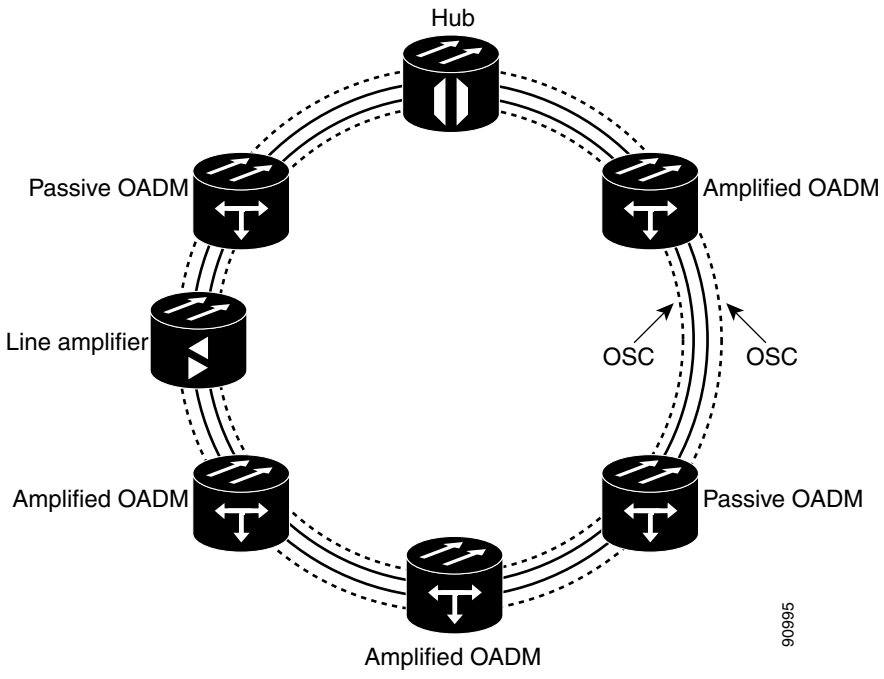

16.2.2 Multihubbed Rings

A multihubbed ring (Figure 16-2) is based on the hubbed ring topology, except that two or more hub nodes are added. Protected traffic can only be established between the two hub nodes. Protected traffic can be provisioned between a hub node and any OADM node only if the allocated wavelength channel is regenerated through the other hub node. Multihop traffic can be provisioned on this ring. From a transmission point of view, this network topology is similar to two or more point-to-point links with OADM nodes.

Figure 16-2 Multihubbed Ring

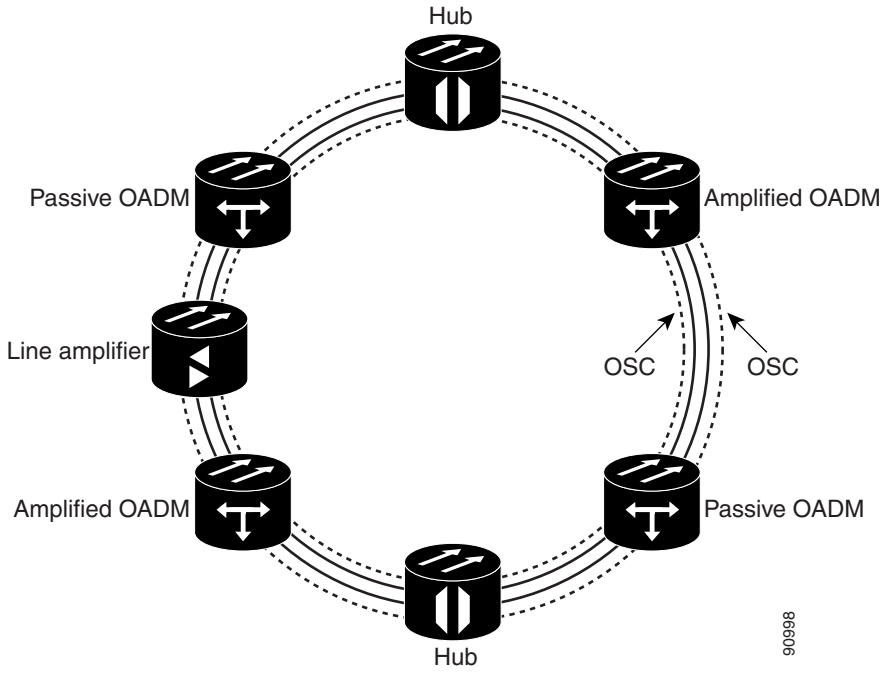

16.2.3 Any-to-Any Rings

The any-to-any ring topology (Figure 16-2) contains only reconfigurable OADM (ROADM) nodes, or ROADM nodes with Optical Service Channel (OSC) regeneration or amplifier nodes. This topology potentially allows you to route every wavelength from any source to any destination node inside the network.

For more information about ROADM nodes, see the "15.1.4 ROADM Node" section on page 15-8.

Figure 16-3 Any-to-Any Ring

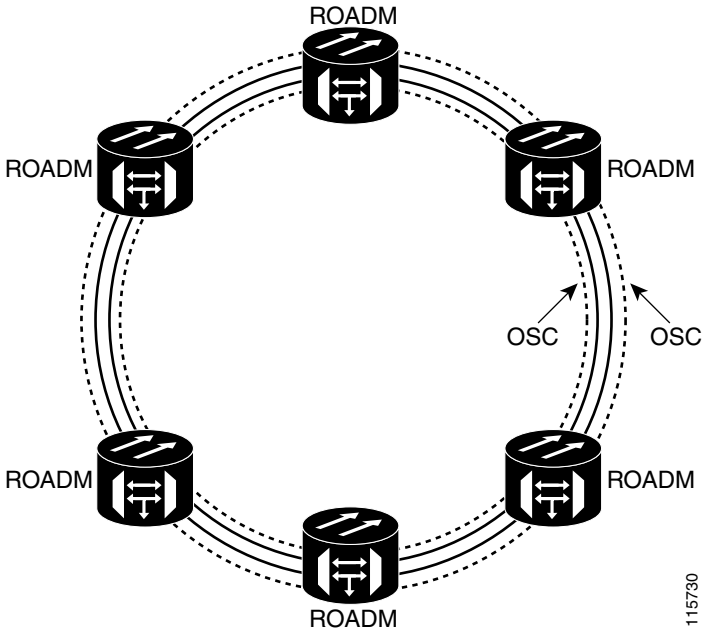

16.2.4 Meshed Rings

The meshed ring topology (Figure 16-4) does not use hubbed nodes; only amplified and passive OADM nodes are present. Protected traffic can be provisioned between any two nodes; however, the selected channel cannot be reused in the ring. Unprotected multihop traffic can be provisioned in the ring. A meshed ring must be designed to prevent amplified spontaneous emission (ASE) lasing. This is done by configuring a particular node as an anti-ASE node. An anti-ASE node can be created in two ways:

- Equip an OADM node with 32MUX-O cards and 32DMX-O cards. This solution is adopted when the total number of wavelengths deployed in the ring is higher than ten. OADM nodes equipped with 32MUX-O cards and 32DMX-O cards are called full OADM nodes.
- When the total number of wavelengths deployed in the ring is lower than ten, the anti-ASE node is configured by using an OADM node where all the channels that are not terminated in the node are configured as "optical pass-through." In other words, no channels in the anti-ASE node can travel through the express path of the OADM node.

For more information about OADM nodes, see the "15.1.3 OADM Node" section on page 15-4. For more information about anti-ASE nodes, see the "15.1.5 Anti-ASE Node" section on page 15-10.

Figure 16-4 Meshed Ring

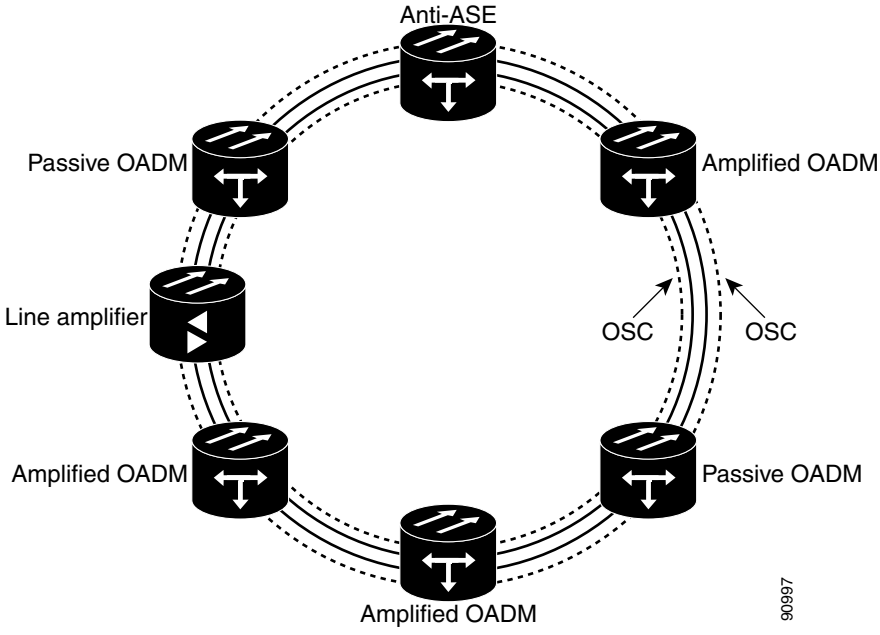

16.2.5 Linear Configurations

Linear configurations are characterized by the use of two terminal nodes (west and east). The terminal nodes can be equipped with a 32MUX-O card and a 32DMX-O card, or a 32WSS card with 32DMX or 32DMX-O card. OADM or line amplifier nodes can be installed between the two terminal nodes. Only unprotected traffic can be provisioned in a linear configuration. Figure 16-5 shows five ONS 15454 nodes in a linear configuration with an amplified and a passive OADM node.

Figure 16-5 Linear Configuration with an OADM Node

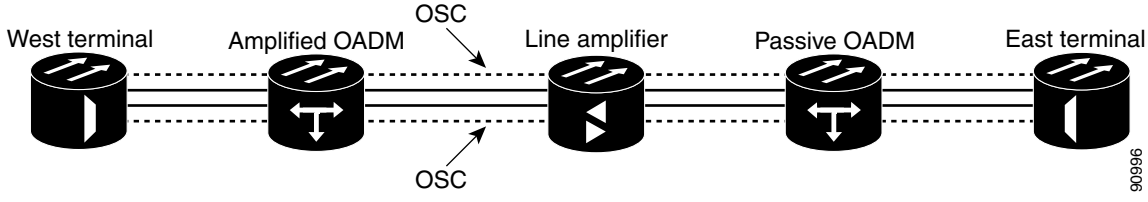

Figure 16-6 shows five ONS 15454 nodes in a linear configuration without an OADM node.

For more information about terminal nodes, see the "15.1.2 Terminal Node" section on page 15-3.

Figure 16-6 Linear Configuration without an OADM Node

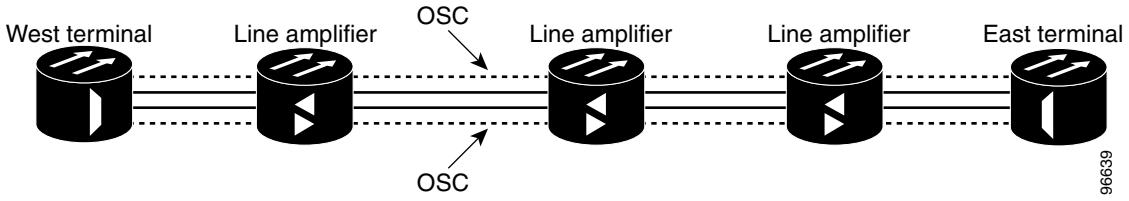

16.2.6 Single-Span Link

Single-span link is a type of linear configuration characterized by a single-span link with pre-amplification and post-amplification. A single-span link is also characterized by the use of two terminal nodes (west and east). The terminal nodes are usually equipped with a 32MUX-O card and a 32DMX-O card. However, a 32WSS card and a 32DMX or a 32DMX-O card can be installed. Software R4.7 also supports single-span links with AD-4C-xx.x cards. Only unprotected traffic can be provisioned on a single-span link.

Figure 16-7 shows ONS 15454s in a single-span link. Eight channels are carried on one span. Single-span link losses apply to OC-192 LR ITU cards. The optical performance values are valid assuming that the sum of the OADM passive node insertion losses and the span losses does not exceed 35 dB.

Figure 16-7 Single-Span Link

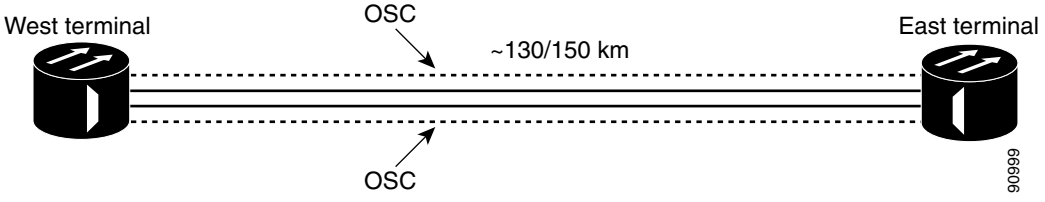

16.3 Optical Performance

This section provides optical performance information for ONS 15454 DWDM networks. The performance data is a general guideline based upon the network topology, node type, client cards, fiber type, number of spans, and number of channels. The maximum number of nodes that can be in an ONS 15454 DWDM network is 16. The DWDM topologies and node types that are supported are shown in Table 16-1.

Table 16-1 Supported Topologies, and Node Types

Number of Channels	Fiber	Topologies	Node Type
32 channels	SMF-28[1] E-LEAF[2] TW-RS[3]	Ring Linear Linear without OADM	Hub Active OADM Passive OADM Terminal Line OSC regeneration
16 channels	SMF-28	Ring Linear Linear without OADM	Hub Active OADM Passive OADM Terminal Line OSC regeneration
8 channels	SMF-28	Linear without OADM	Terminal Line

1. SMF-28 = single-mode fiber 28
2. E-LEAF = enhanced large effective area fiber
3. TW-RS = TrueWave reduced slope fiber

DWDM client cards are grouped into nine classes, shown in Table 16-2. Span loss estimates are based on the number of spans in the network and the client card class. Some cards belong to more than one class depending on whether forward error correction (FEC) is enabled and on the payload data type provisioned for the card.

Table 16-2 ONS 15454 Client Card Classes

Class	Rate	Clients
A	10 Gbps	TXP_2.5G_10G—FEC enabled TXP_2.5G_10E—FEC enabled TXP_MR_10G—FEC enabled TXP_MR_10E—FEC enabled
B	10 Gbps	TXP_2.5G_10G—FEC not enabled TXP_MR_10G—FEC not enabled
C	10 Gbps	OC-192 LR ITU TXP_2.5G_10E—FEC not enabled
D	2.5 Gbps	TXP_MR_2.5G—FEC enabled TXPP_MR_2.5G—FEC enabled

Table 16-2 ONS 15454 Client Card Classes (continued)

Class	Rate	Clients
E	2.5 Gbps	TXP_MR_2.5G—3R payload data type; FEC disabled TXPP_MR_2.5G—3R payload data type; FEC disabled MXP_MR_2.5G MXPP_MR_2.5G
F	2.5 Gbps	TXP_MR_2.5G—2R payload data type TXPP_MR_2.5G—2R payload data type
G	2.5 Gbps	OC-48 ELR ITU
H	2.5 Gbps	2/4 port Gigabit Ethernet Transponder (GBIC WDM 100 GHz)
I	10 Gbps	TXP_2.5G_10E—E-FEC[1] enabled TXP_MR_10E—E-FEC enabled

1. Forward error correction

16.3.1 Optical Performance for Rings and Linear Networks with OADM Nodes

The following tables provide optical performance estimates for open and closed ONS 15454 rings and linear networks with OADM nodes. Table 16-3 shows the optical performance for 32-channel networks using SMF fiber. Span losses shown in the table assume:

- OADM nodes have a loss of 16 dB and equal span losses.
- Optical Preamplifier (OPT-PRE) and Optical Booster (OPT-BST/OPT-BST-E) amplifiers are installed in all nodes.
- The OPT-PRE amplifier switches to control power whenever the span loss is higher than 27 dB.

Note See Table 16-2 for a list of cards in each class. A dash (—) indicates spans that are not supported.

Table 16-3 Span Loss for 32-Channel Ring and Linear Networks with OADM Nodes Using SMF Fiber

Number of Spans	10 Gbps				2.5 Gbps					
	Class A	Class B	Class C	Class I	Class D	Class E	Class F	Class G	Class H	Class J
1	34 dB	26 dB	26 dB	36 dB	37 dB	33 dB	30 dB	32 dB	34 dB	30 dB
2	28 dB	21 dB	20 dB	30 dB	31 dB	28 dB	25 dB	27 dB	29 dB	25 dB
3	26 dB	17 dB	15 dB	28 dB	29 dB	26 dB	23 dB	25 dB	26 dB	23 dB
4	24 dB	—	—	25 dB	26 dB	23 dB	20 dB	22 dB	24 dB	20 dB
5	22 dB	—	—	24 dB	25 dB	22 dB	16 dB	20 dB	23 dB	16 dB
6	20 dB	—	—	22 dB	24 dB	19 dB	—	17 dB	21 dB	—
7	18[1] dB	—	—	21 dB	23 dB	16 dB	—	—	19 dB	—

1. 0.5 dB of OSNR impairment recovered by FEC margin @ BER > 10-6

Table 16-4 shows the optical performance for 16-channel networks using SMF fiber. Span loss values assume the following:

- OADM nodes have a loss of 16 dB and equal span losses.
- All nodes have OPT-PRE and OPT-BST/OPT-BST-E amplifiers installed.
- The OPT-PRE amplifier switches to control power whenever the span loss is higher than 27 dB.

Note See Table 16-2 for client card class definitions. A dash (—) indicates the spans are not available for that client class.

Table 16-4 Span Loss for 16-Channel Ring and Linear Networks with OADM Nodes Using SMF Fiber

Number of Spans	10 Gbps				2.5 Gbps					
	Class A	Class B	Class C	Class I	Class D	Class E	Class F	Class G	Class H	Class J
1	37 dB	29 dB	29 dB	37 dB	37 dB	36 dB	33 dB	35 dB	37 dB	33 dB
2	31 dB	25 dB	24 dB	33 dB	34 dB	31 dB	28 dB	30 dB	32 dB	28 dB
3	28 dB	22 dB	21 dB	30 dB	31 dB	28 dB	26 dB	27 dB	29 dB	26 dB
4	26 dB	19 dB	17 dB	28 dB	29 dB	26 dB	24 dB	25 dB	27 dB	24 dB
5	25 dB	—	—	26 dB	27 dB	25 dB	22 dB	24 dB	25 dB	22 dB
6	24 dB	—	—	25 dB	26 dB	24 dB	21 dB	23 dB	24 dB	21 dB
7	23 dB	—	—	25 dB	25 dB	23 dB	19 dB	22 dB	24 dB	19 dB

Table 16-5 shows the optical performance for 32-channel networks using TW-RS fiber. Span loss values assume the following:

- OADM nodes have a loss of 16 dB and equal span losses.
- All nodes have OPT-PRE and OPT-BST/OPT-BST-E amplifiers installed.
- The OPT-PRE amplifier switches to control power whenever the span loss is higher than 27 dB.

Note See Table 16-2 for client card class definitions. A dash (—) indicates the spans are not available for that client class.

Table 16-5 Span Loss for 32-Channel Ring and Linear Networks with OADM Nodes Using TW-RS Fiber

Number of Spans	10 Gbps				2.5 Gbps					
	Class A	Class B	Class C	Class I	Class D	Class E	Class F	Class G	Class H	Class J
1	34 dB	26 dB	25 dB	36 dB	34 dB	33 dB	30 dB	32 dB	34 dB	30 dB
2	29 dB	21 dB	20 dB	31 dB	32 dB	29 dB	26 dB	28 dB	30 dB	26 dB
3	27 dB	17 dB	15 dB	29 dB	30 dB	26 dB	23 dB	25 dB	27 dB	23 dB
4	24 dB	—	—	26 dB	28 dB	23 dB	20 dB	22 dB	24 dB	20 dB
5	22 dB	—	—	24 dB	26 dB	22 dB	16 dB	20 dB	23 dB	16 dB
6	20 dB	—	—	22 dB	24 dB	19 dB	—	17 dB	21 dB	—
7	18 dB	—	—	21 dB	23 dB	16 dB	—	—	19 dB	—

Table 16-6 shows the optical performance for 32-channel networks using E-LEAF fiber. Span loss values assume the following:

- OADM nodes have a loss of 16 dB and equal span losses.
- All nodes have OPT-PRE and OPT-BST/OPT-BST-E amplifiers installed.
- The OPT-PRE amplifier switches to control power whenever the span loss is higher than 27 dB.

Note See Table 16-2 for client card class definitions. A dash (—) indicates the spans are not available for that client class.

Table 16-6 Span Loss for 32-Channel Ring and Linear Networks with OADM Nodes Using E-LEAF Fiber

Number of Spans	10 Gbps				2.5 Gbps					
	Class A	Class B	Class C	Class I	Class D	Class E	Class F	Class G	Class H	Class J
1	34 dB	26 dB	26 dB	36 dB	34 dB	33 dB	30 dB	32 dB	34 dB	30 dB
2	29 dB	21 dB	20 dB	31 dB	32 dB	29 dB	26 dB	28 dB	30 dB	26 dB
3	27 dB	17 dB	15 dB	29 dB	30 dB	26 dB	23 dB	25 dB	27 dB	23 dB
4	23 dB	—	—	25 dB	28 dB	23 dB	20 dB	22 dB	24 dB	20 dB
5	21 dB	—	—	23 dB	26 dB	22 dB	16 dB	20 dB	23 dB	16 dB
6	18 dB	—	—	21 dB	24 dB	19 dB	—	17 dB	21 dB	—
7	15 dB	—	—	19 dB	23 dB	16 dB	—	—	19 dB	—

16.3.2 Optical Performance for Linear Networks Without OADM Nodes

The following tables list the reference optical performances for linear networks without OADM nodes. Table 16-7 shows the optical performance for 32-channel linear networks using SMF fiber. Span loss values assume the following:

- No OADM nodes are installed.
- Only OPT-PRE amplifiers are installed.
- Span losses are equal.

Note See Table 16-2 for client card class definitions. A dash (—) indicates the spans are not available for that client class.

Table 16-7 Span Loss for 32-Channel Linear Networks without OADM Nodes Using SMF Fiber

Number of Spans	10 Gbps				2.5 Gbps					
	Class A	Class B	Class C	Class I	Class D	Class E	Class F	Class G	Class H	Class J
1	34 dB	26 dB	26 dB	36 dB	37 dB	33 dB	30 dB	32 dB	34 dB	30 dB
2	27 dB	21 dB	20 dB	29 dB	30 dB	27 dB	24 dB	26 dB	27 dB	24 dB
3	24 dB	18 dB	18 dB	26 dB	26 dB	24 dB	21 dB	23 dB	24 dB	21 dB
4	23 dB	17 dB	16 dB	24 dB	24 dB	22 dB	20 dB	21 dB	23 dB	20 dB

Table 16-7 Span Loss for 32-Channel Linear Networks without OADM Nodes Using SMF Fiber (continued)

Number of Spans	10 Gbps				2.5 Gbps					
	Class A	Class B	Class C	Class I	Class D	Class E	Class F	Class G	Class H	Class J
5	21 dB	—	—	22 dB	23 dB	20 dB	19 dB	20 dB	21 dB	19 dB
6	20 dB	—	—	21 dB	22 dB	20 dB	18 dB	19 dB	20 dB	18 dB
7	19 dB	—	—	20 dB	21 dB	19 dB	17 dB	18 dB	19 dB	17 dB

Table 16-8 shows the optical performance for 32-channel linear networks using TW-RS fiber. Span loss values assume the following:

- No OADM nodes are installed.
- Only OPT-PRE amplifiers are installed.
- Span losses are equal.

Note See Table 16-2 for client card class definitions. A dash (—) indicates the spans are not available for that client class.

Table 16-8 Span Loss for 32-Channel Linear Networks without OADM Nodes Using TW-RS Fiber

Number of Spans	10 Gbps				2.5 Gbps					
	Class A	Class B	Class C	Class I	Class D	Class E	Class F	Class G	Class H	Class J
1	34 dB	26 dB	26 dB	36 dB	34 dB	33 dB	30 dB	32 dB	34 dB	30 dB
2	28 dB	21 dB	21 dB	30 dB	31 dB	28 dB	25 dB	27 dB	28 dB	25 dB
3	26 dB	18 dB	18 dB	27 dB	28 dB	25 dB	23 dB	24 dB	26 dB	23 dB
4	24 dB	17 dB	16 dB	26 dB	26 dB	24 dB	21 dB	23 dB	24 dB	21 dB
5	23 dB	—	—	24 dB	25 dB	23 dB	19 dB	22 dB	23 dB	19 dB
6	23 dB	—	—	24 dB	24 dB	22 dB	18 dB	21 dB	23 dB	18 dB
7	21 dB	—	—	23 dB	23 dB	20 dB	17 dB	19 dB	21 dB	15 dB

Table 16-9 shows the optical performance for 32-channel linear networks using E-LEAF fiber. Span loss values assume the following:

- No OADM nodes are installed.
- Only OPT-PRE amplifiers are installed.
- Span losses are equal.

Note See Table 16-2 for client card class definitions. A dash (—) indicates the spans are not available for that client class.

Table 16-9 Span Loss for 32-Channel Linear Networks without OADM Nodes Using E-LEAF Fiber

Number of Spans	10 Gbps				2.5 Gbps					
	Class A	Class B	Class C	Class I	Class D	Class E	Class F	Class G	Class H	Class J
1	34 dB	26 dB	26 dB	36 dB	34 dB	33 dB	30 dB	32 dB	34 dB	30 dB
2	28 dB	21 dB	21 dB	30 dB	31 dB	28 dB	25 dB	27 dB	28 dB	25 dB
3	26 dB	18 dB	18 dB	27 dB	28 dB	25 dB	23 dB	24 dB	26 dB	23 dB
4	24 dB	17 dB	16 dB	25 dB	26 dB	24 dB	21 dB	23 dB	24 dB	21 dB
5	23 dB	—	—	24 dB	25 dB	23 dB	19 dB	22 dB	23 dB	19 dB
6	21 dB	—	—	23 dB	24 dB	22 dB	18 dB	21 dB	23 dB	18 dB
7	20 dB	—	—	21 dB	23 dB	20 dB	17 dB	19 dB	21 dB	15 dB

Table 16-10 shows the optical performance for 16-channel linear networks using SMF fiber. Span loss values assume the following:

- No OADM nodes are installed.
- Only OPT-PRE amplifiers are installed.
- Span losses are equal.
- The minimum channel power is 4 dBm.
- Wavelengths are picked up without any restriction from Bands 4 and 5 (1542.14 to 1545.51 nm).

Note See Table 16-2 for client card class definitions.

Table 16-10 Span Loss for 16-Channel Linear Networks without OADM Nodes Using SMF Fiber

Number of Spans	10 Gbps				2.5 Gbps					
	Class A	Class B	Class C	Class I	Class D	Class E	Class F	Class G	Class H	Class J
1	37 dB	29 dB	29 dB	37 dB	37 dB	36 dB	33 dB	35 dB	37 dB	33 dB
2	32 dB	24 dB	24 dB	33 dB	34 dB	31 dB	28 dB	30 dB	32 dB	28 dB
3	28 dB	21 dB	21 dB	30 dB	31 dB	27 dB	25 dB	27 dB	28 dB	25 dB
4	26 dB	20 dB	19 dB	28 dB	28 dB	25 dB	23 dB	24 dB	26 dB	23 dB
5	25 dB	19 dB	18 dB	26 dB	27 dB	24 dB	22 dB	23 dB	25 dB	22 dB
6	24 dB	18 dB	17 dB	25 dB	26 dB	23 dB	21 dB	22 dB	24 dB	21 dB
7	22 dB	16 dB	15 dB	24 dB	24 dB	22 dB	20 dB	21 dB	22 dB	20 dB

Table 16-11 shows the optical performance for 8-channel linear networks using SMF fiber. Span loss values assume the following:

- No OADM nodes are installed.
- Only OPT-PRE amplifiers are installed.
- Span losses are equal.

Note See Table 16-2 for client card class definitions. A dash (—) indicates the spans are not available for that client class.

Table 16-11 Span Loss for 8-Channel Linear Networks without OADM Nodes Using SMF Fiber

Number of Spans	10 Gbps				2.5 Gbps					
	Class A	Class B	Class C	Class I	Class D	Class E	Class F	Class G	Class H	Class J
1	37 dB	31 dB	31 dB	37 dB	37 dB	37 dB	35 dB	37 dB	37 dB	35 dB
2	34 dB	27 dB	26 dB	36 dB	37 dB	33 dB	30 dB	32 dB	34 dB	30 dB
3	31 dB	24 dB	23 dB	33 dB	34 dB	30 dB	27 dB	29 dB	31 dB	27 dB
4	29 dB	—	—	31 dB	31 dB	28 dB	25 dB	27 dB	29 dB	25 dB
5	27 dB	—	—	29 dB	30 dB	27 dB	24 dB	26 dB	27 dB	24 dB
6	—	—	—	28 dB	—	—	—	—	—	—

16.3.3 Optical Performance for ROADM Rings and Linear Networks

The following tables list the reference optical performances for ROADM rings and linear networks. Table 16-12 shows the optical performance for 32-channel linear or ring networks using SMF fiber with only ROADM nodes installed. Span loss values assume the following:

- All nodes in the ring or linear network are ROADM.
- OPT-PRE and OPT-BST/OPT-BST-E amplifiers are installed.
- Span losses are equal.

Note See Table 16-2 for client card class definitions. A dash (—) indicates spans that are not available for that client class.

Table 16-12 Span Loss for 32-Channel Linear or Ring Networks with all ROADM Nodes Using SMF Fiber

Number of Spans	10 Gbps				2.5 Gbps					
	Class A	Class B	Class C	Class I	Class D	Class E	Class F	Class G	Class H	Class J
1	34 dB	26 dB	26 dB	36 dB	37 dB	33 dB	27 dB	32 dB	34 dB	—
2	29 dB	21 dB	21 dB	32 dB	33 dB	29 dB	27 dB	28 dB	30 dB	—
3	28 dB	19 dB	18 dB	30 dB	31 dB	27 dB	25 dB	26 dB	27 dB	—
4	25 dB	—	—	28 dB	29 dB	25 dB	23 dB	24 dB	26 dB	—
5	24 dB	—	—	27 dB	28 dB	24 dB	22 dB	22 dB	24 dB	—
6	23 dB	—	—	26 dB	27 dB	22 dB	21 dB	21 dB	23 dB	—
7	22 dB	—	—	25 dB	26 dB	21 dB	20 dB	20 dB	22 dB	—
8	21 dB	—	—	24 dB	25 dB	20 dB	—	18 dB	20 dB	—
9	20 dB	—	—	23 dB	24 dB	19 dB	27 dB	17 dB	19 dB	—
10	19 dB	—	—	23 dB	23 dB	18 dB	25 dB	14 dB	18 dB	—

Table 16-12 Span Loss for 32-Channel Linear or Ring Networks with all ROADM Nodes Using SMF Fiber (continued)

Number of Spans	10 Gbps				2.5 Gbps					
	Class A	Class B	Class C	Class I	Class D	Class E	Class F	Class G	Class H	Class J
11	16 dB	—	—	22 dB	23 dB	16 dB	23 dB	—	19 dB	—
12	—	—	—	21 dB	22 dB	14 dB	22 dB	—	18 dB	—
13	—	—	—	21 dB	22 dB	—	21 dB	—	—	—
14	—	—	—	20 dB	21 dB	—	20 dB	—	—	—
15	—	—	—	20 dB	20 dB	—	20 dB	—	—	—

Table 16-13 shows the optical performance for 32-channel linear or ring network with ROADM and OADM nodes using SMF fiber. Span loss values assume the following:

- All nodes in the ring or linear network are ROADM or OADM.
- OPT-PRE and OPT-BST/OPT-BST-E amplifiers are installed.
- Span losses are equal.

Note See Table 16-2 for client card class definitions. A dash (—) indicates spans that are not available for that client class.

Table 16-13 Span Loss for 32-Channel Ring and Linear Networks with ROADM and OADM Nodes Using SMF Fiber

Number of Spans	10 Gbps				2.5 Gbps					
	Class A	Class B	Class C	Class I	Class D	Class E	Class F	Class G	Class H	Class J
1	30 dB	23 dB	24 dB	31 dB	34 dB	31 dB	28 dB	29 dB	30 dB	28 dB
2	26 dB	19 dB	19 dB	27 dB	27 dB	26 dB	23 dB	26 dB	27 dB	23 dB
3	23 dB	—	—	25 dB	26 dB	23 dB	21 dB	23 dB	24 dB	21 dB
4	21 dB	—	—	23 dB	24 dB	22 dB	18 dB	21 dB	22 dB	18 dB
5	20 dB	—	—	22 dB	23 dB	20 dB	13 dB	20 dB	21 dB	13 dB
6	17 dB	—	—	19 dB	22 dB	18 dB	—	17 dB	18 dB	—
7	15[1] dB	—	—	17 dB	21 dB	16 dB	—	15[1]	16 dB	—

1. 0.5 dB of OSNR impairment recovered by FEC margin @ BER>10-6

The following tables show the pass/fail criteria for eight and sixteen ROADM nodes. Table 16-14 shows the pass/fail criteria for eight ROADM nodes (seven spans) required for any-to-any node circuit reconfigurations:

- All nodes in the ring are ROADM.
- Span losses are equal.

Note See Table 16-2 for client card class definitions. A dash (—) indicates spans that are not available for that client class.

Table 16-14 Pass/Fail Criteria for 32-Channel, 8-Node ROADM Rings Using SMF Fiber

Span Loss (dB)	Amplifiers Installed	10 Gbps				2.5 Gbps					
		Class A	Class B	Class C	Class I	Class D	Class E	Class F	Class G	Class H	Class J
1	OPT-PRE only	Yes	<7	<7	Yes	Yes	Yes	Yes	Yes	Yes	—
2	OPT-PRE only	Yes	<7	<7	Yes	Yes	Yes	Yes	Yes	Yes	—
3	OPT-PRE only	Yes	<7	<7	Yes	Yes	Yes	<7	Yes	Yes	—
4	OPT-PRE only	Yes	<7	<7	Yes	Yes	Yes	<7	Yes	Yes	—
5	OPT-PRE only	Yes	<7	<7	Yes	Yes	Yes	<7	Yes	Yes	—
6	OPT-PRE only	Yes	<7	<7	Yes	Yes	Yes	<7	Yes	Yes	—
7	OPT-PRE and OPT-BST/OPT-BST-E	Yes	<7	<7	Yes	Yes	Yes	<7	Yes	Yes	—
8	OPT-PRE and OPT-BST/OPT-BST-E	Yes	<7	<7	Yes	Yes	Yes	<7	Yes	Yes	—
9	OPT-PRE and OPT-BST/OPT-BST-E	Yes	<7	<7	Yes	Yes	Yes	Yes	Yes	Yes	—
10	OPT-PRE and OPT-BST/OPT-BST-E	Yes	<7	<7	Yes	Yes	Yes	Yes	Yes	Yes	—
11	OPT-PRE and OPT-BST/OPT-BST-E	Yes	<7	<7	Yes	Yes	Yes	Yes	Yes	Yes	—
12	OPT-PRE and OPT-BST/OPT-BST-E	Yes	<7	<7	Yes	Yes	Yes	Yes	Yes	Yes	—
13	OPT-PRE and OPT-BST/OPT-BST-E	Yes	<7	<7	Yes	Yes	Yes	Yes	Yes	Yes	—
14	OPT-PRE and OPT-BST/OPT-BST-E	Yes	<7	<7	Yes	Yes	Yes	Yes	Yes	Yes	—
15	OPT-PRE and OPT-BST/OPT-BST-E	Yes	<7	<7	Yes	Yes	Yes	Yes	Yes	Yes	—

Table 16-15 shows the pass/fail criteria for 16 ROADM nodes (15 spans) required for any-to-any node circuit reconfigurations.

- All nodes in the ring are ROADM.
- Span losses are equal.

Note See Table 16-2 for client card class definitions. A dash (—) indicates spans that are not available for that client class.

Table 16-15 Pass/Fail Criteria for 32-Channel, 16-Node ROADM Rings Using SMF Fiber

Span Loss (dB)	Amplifiers Installed	10 Gbps				2.5 Gbps					
		Class A	Class B	Class C	Class I	Class D	Class E	Class F	Class G	Class H	Class J
1	OPT-PRE only	<15[1]	<15[1]	<15[1]	Yes	Yes	<15[1]	<15[1]	<15[1]	<15[1]	—
2	OPT-PRE only	<15[1]	<15[1]	<15[1]	Yes	Yes	<15[1]	<15[1]	<15[1]	<15[1]	—
3	OPT-PRE only	<15[1]	<15[1]	<15[1]	Yes	Yes	<15[1]	<15[1]	<15[1]	<15[1]	—
4	OPT-PRE only	<15[1]	<15[1]	<15[1]	Yes	Yes	<15[1]	<15[1]	<15[1]	<15[1]	—
5	OPT-PRE only	<15[1]	<15[1]	<15[1]	Yes	Yes	<15[1]	<15[1]	<15[1]	<15[1]	—
6	OPT-PRE only	<15[1]	<15[1]	<15[1]	Yes	Yes	<15[1]	<15[1]	<15[1]	<15[1]	—
7	OPT-PRE and OPT-BST/OPT-BST-E	<15[1]	<15[1]	<15[1]	Yes	Yes	<15[1]	<15[1]	<15[1]	<15[1]	—
8	OPT-PRE and OPT-BST/OPT-BST-E	<15[1]	<15[1]	<15[1]	Yes	Yes	<15[1]	<15[1]	<15[1]	<15[1]	—
9	OPT-PRE and OPT-BST/OPT-BST-E	<15[1]	<15[1]	<15[1]	Yes	Yes	<15[1]	<15[1]	<15[1]	<15[1]	—
10	OPT-PRE and OPT-BST/OPT-BST-E	<15[1]	<15[1]	<15[1]	Yes	Yes	<15[1]	<15[1]	<15[1]	<15[1]	—
11	OPT-PRE and OPT-BST/OPT-BST-E	<15[1]	<15[1]	<15[1]	Yes	Yes	<15[1]	<15[1]	<15[1]	<15[1]	—
12	OPT-PRE and OPT-BST/OPT-BST-E	<15[1]	<15[1]	<15[1]	Yes	Yes	<15[1]	<15[1]	<15[1]	<15[1]	—
13	OPT-PRE and OPT-BST/OPT-BST-E	<15[1]	<15[1]	<15[1]	Yes	Yes	<15[1]	<15[1]	<15[1]	<15[1]	—
14	OPT-PRE and OPT-BST/OPT-BST-E	<15[1]	<15[1]	<15[1]	Yes	Yes	<15[1]	<15[1]	<15[1]	<15[1]	—
15	OPT-PRE and OPT-BST/OPT-BST-E	<15[1]	<15[1]	<15[1]	Yes	Yes	<15[1]	<15[1]	<15[1]	<15[1]	—

1. Cisco MetroPlanner calculates the maximum ring circumference and number of nodes that can be supported.

16.3.4 Optical Performance for Single-Span Networks

Table 16-16 lists the span loss for a single-span link configuration with eight channels. The optical performance for this special configuration is given only for Classes A and C. This configuration assumes a maximum channel capacity of eight channels (8-dBm nominal channel power) used without any restrictions on the 32 available channels.

Table 16-16 Span Loss for Single-Span Link with Eight Channels

Node Configuration	Number of Spans	10 Gbps			2.5 Gbps			
		Class A	Class B	Class C	Class D	Class E	Class F	Class G
With OSCM card	1	37 dB	—	37 dB	—	—	—	—
With OSC-CSM card	1	35 dB	—	35 dB	—	—	—	—

Table 16-17 lists the span loss for a single-span link configuration with 16 channels. The optical performance for this special configuration is given only for Class A and Class C. This configuration assumes a maximum channel capacity of 16 channels (5-dBm nominal channel power) used without any restrictions on the 32 available channels.

Table 16-17 Span Loss for Single-Span Link with 16 Channels

Node Configuration	Number of Spans	10 Gbps			2.5 Gbps			
		Class A	Class B	Class C	Class D	Class E	Class F	Class G
With OSCM or OSC-SCM cards	1	35 dB	—	35 dB	—	—	—	—

Table 16-18 lists the span loss for a single-span link configuration with AD-1C-x.xx cards, OPT-PRE amplifiers, and OPT-BST/OPT-BST-E amplifiers. The single-span link with a flexible channel count is used both for transmitting and receiving. If dispersion compensation is required, a DCU can be used with an OPT-PRE amplifier. The optical performance for this special configuration is given for Classes A through G (8-dBm nominal channel power) used without any restrictions on the 32 available channels.

Table 16-18 Span Loss for Single-Span Link with AD-1C-xx.x Cards, OPT-PRE Amplifiers, and OPT-BST/OPT-BST-E Amplifiers

Node Configuration	Number of Spans	10 Gbps			2.5 Gbps			
		Class A	Class B	Class C	Class D	Class E	Class F	Class G
With OSCM cards[1]	1	37 dB	31 dB	31 dB	37 dB	37 dB	37 dB	37 dB
Hybrid with OSC-CSM cards[2]	1	35 dB	31 dB	31 dB	35 dB	35 dB	35 dB	35 dB

1. OSCM sensitivity limits the performance to 37 dB.
2. OSC-CSM sensitivity limits the performance to 35 dB when it replaces the OSCM.

Table 16-19 lists the span loss for a single-span link configuration with one channel and OPT-BST/OPT-BST-E amplifiers. The optical performance for this special configuration is given for Classes A through G. Classes A, B, and C use 8-dBm nominal channel power. Classes D, E, F, and G use

12-dBm nominal channel power. There are no restriction on the 32 available channels. That is, a line card, transponder, or muxponder wavelength can be extracted from the 32 available wavelengths. Also, the optical service channel is not required.

Table 16-19 Span Loss for Single-Span Link with One Channel and OPT-BST/OPT-BST-E Amplifiers

Number of Spans	10 Gbps			2.5 Gbps			
	Class A	Class B	Class C	Class D	Class E	Class F	Class G
1	20 to 30 dB	17 to 26 dB	17 to 28 dB	Unprotected from 29 to 41 dB Protected from 25 to 41 dB	Unprotected from 28 to 37 dB Protected from 24 to 40 dB	Unprotected from 21 to 34 dB Protected from 18 to 34 dB	From 23 to 36 dB

Table 16-20 lists the span loss for a single-span link configuration with one channel, OPT-BST/OPT-BST-E amplifiers, OPT-PRE amplifiers, and ONS 15216 FlexLayer filters. ONS 15216 FlexLayer filters are used instead of the AD-1C-xx.x cards to reduce equipment costs and increase the span length, since the optical service channel is not necessary. The optical performance for this special configuration is given for Classes A through G. Classes A, B, and C use 8-dBm nominal channel power. Classes D, E, F, and G use 12-dBm nominal channel power. There are no restriction on the first 16 available wavelengths (from 1530.33 to 1544.53 nm).

Table 16-20 Span Loss for Single-Span Link with One Channel, OPT-BST/OPT-BST-E Amplifiers, OPT-PRE Amplifiers, and ONS 15216 FlexLayer Filters

Number of Spans	10 Gbps			2.5 Gbps			
	Class A	Class B[1]	Class C[1]	Class D[1]	Class E[1]	Class F[1]	Class G[1]
1x	38 dB	30 dB	30 dB	44 dB	40 dB	38 dB	40 dB

16.4 Network Optical Safety - Automatic Laser Shutdown

Automatic laser shutdown (ALS) is a technique used to automatically shut down the output power of laser transmitters and optical amplifiers in the event of a fiber break. Cards with laser transmitters can be provisioned as follows with respect to ALS:

- Disable: ALS is off; the laser is not automatically shut down when a traffic outage loss of signal (LOS) occurs
- Auto Restart: ALS is on. The laser automatically shuts down when traffic outages (LOS) occur. It automatically restarts when the conditions that caused the outage are resolved.

Note Auto Restart is the default ALS provisioning

- Manual Restart: ALS is on. The laser automatically shuts down when traffic outages (LOS) occur. However, the laser must be manually restarted when conditions that caused the outage are resolved.
- Manual Restart for Test: Manually restarts the laser for testing.

In the following paragraphs, two ALS scenarios are given:

- Nodes using OPT-BT cards (amplified nodes)

- Nodes using OSC-CSM cards (passive nodes)

16.4.1 Scenario 1: Fiber Cut in Nodes Using OPT-BST or OPT-BST-E Cards

Figure 16-8 shows nodes using OPT-BST or OPT-BST-E cards with a fiber cut between them.

Figure 16-8 Nodes Using OPT-BST/OPT-BST-E Cards

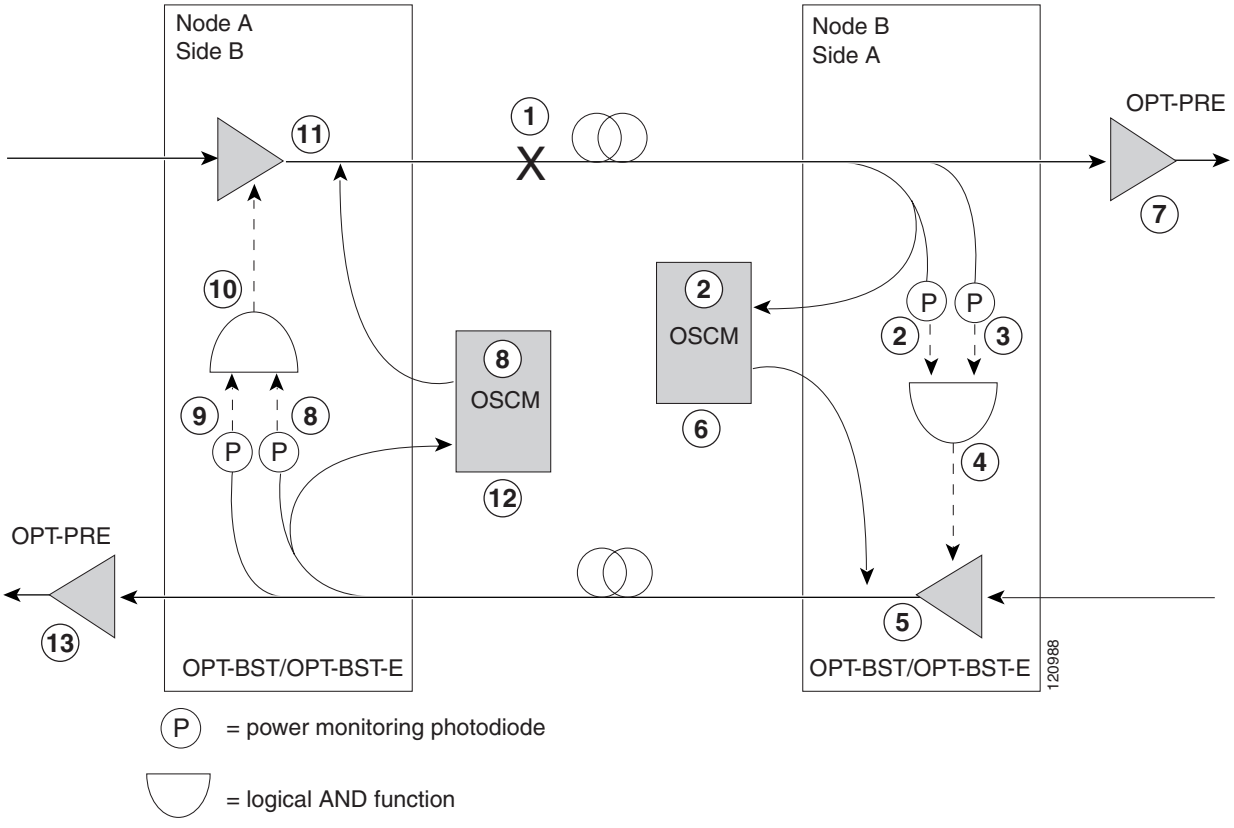

Two photodiodes at Node B monitor the received signal strength for the optical payload and optical service channel (OSC) signals. When the fiber is cut, a loss of signal (LOS) is detected at both of the photodiodes. The AND function then indicates an overall LOS condition, which causes the OPT-BST/OPT-BST-E transmitter, OPT-PRE transmitter, and OSCM lasers to shut down. This in turn leads to a LOS for both the optical payload and OSC at Node A, which causes Node A to turn off the OSCM, OPT-PRE transmitter, and OPT-BST/OPT-BST-E transmitter lasers. The sequence of events after a fiber cut is as follows (refer to the numbered circles in Figure 16-8):

1. Fiber is cut
2. Power monitoring photodiode detects a LOS on the OSC and OSCM detects LOS
3. Power monitoring photodiode detects a LOS for the optical payload
4. LOS is declared
5. The OPT-BST/OPT-BST-E amplifier laser is shut down in less than three seconds
6. The OSCM laser is shut down
7. The OPT-PRE laser is shut down

8. Power monitoring photodiode detects a LOS on the OSC and OSCM detects LOS
9. Power monitoring photodiode detects a LOS for the optical payload
10. LOS is declared
11. The OPT-BST/OPT-BST-E amplifier laser is shut down
12. The OSCM laser is shut down
13. The OPT-PRE laser is shut down

When the fiber is repaired, either an automatic or manual restart at the Node A OPT-BST/OPT-BST-E transmitter or at the Node B OPT-BST/OPT-BST-E transmitter is required. A system that has been shut down is reactivated through the use of a restart pulse. The pulse is used to signal that the optical path has been restored and transmission can begin. For example, when the far end, Node B, receives a pulse, it signals to the Node B OPT-BST/OPT-BST-E transmitter to begin transmitting an optical signal. The OPT-BST/OPT-BST-E receiver at Node A receives that signal and signals the Node A OPT-BST/OPT-BST-E transmitter to resume transmitting.

Note During a laser restart pulse, automatic power reduction (APR) is disabled and the laser power does not exceed Class 1 limits.

16.4.2 Scenario 2: Fiber Cut in Nodes Using OSC-CSM Cards

Figure 16-9 shows nodes using OSC-CSM cards with a fiber cut between them.

Figure 16-9 Nodes Using OSC-CSM Cards

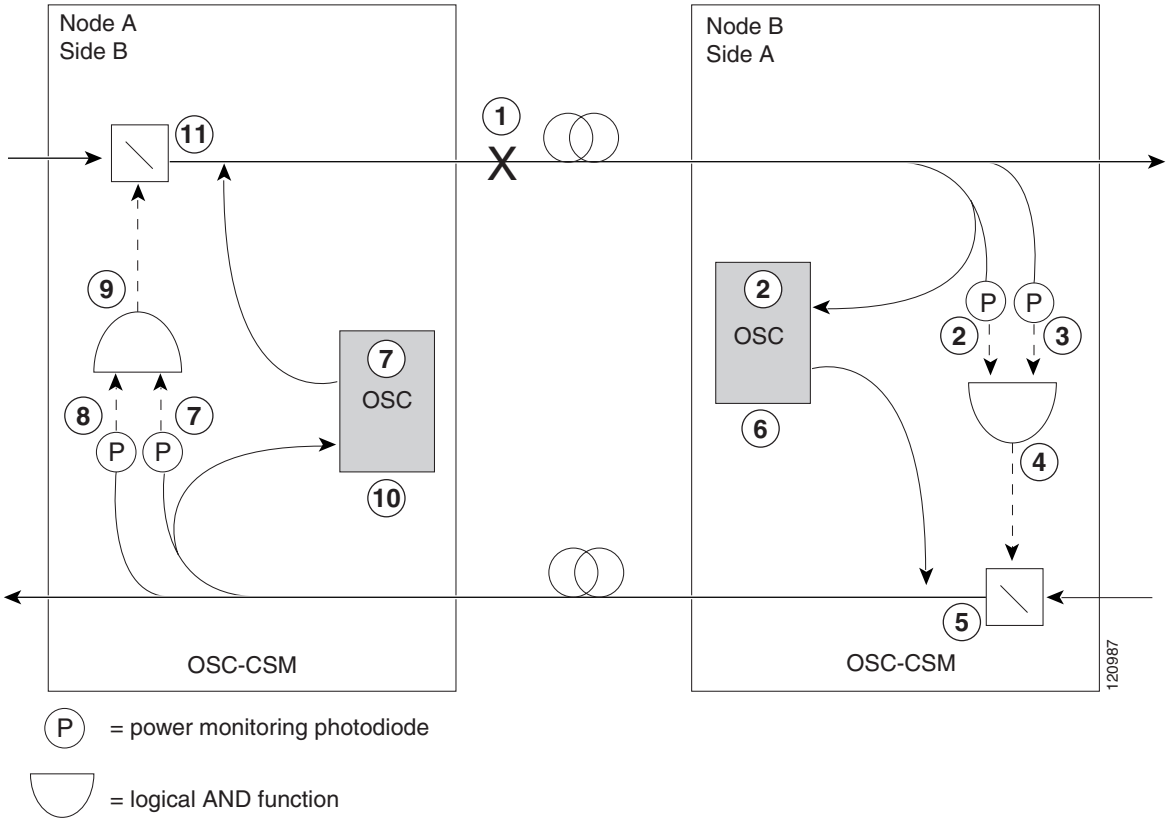

Two photodiodes at the Node B OSC-CSM card monitor the received signal strength for the received optical payload and OSC signals. When the fiber is cut, LOS is detected at both of the photodiodes. The AND function then indicates an overall LOS condition, which causes the Node B OSC laser to shut down and the optical switch to block traffic coming into the node. This in turn leads to LOS for both the optical payload and OSC signals at Node A, which causes Node A to turn off the OSC laser and the optical switch to block incoming traffic. The sequence of events after a fiber cut is as follows (refer to the numbered circles in Figure 16-9):

1. Fiber is cut
2. Power monitoring photodiode detects a LOS on the OSC and OSC-CSM detects LOS
3. Power monitoring photodiode detects a LOS for the optical payload
4. LOS is declared
5. The optical switch blocks incoming traffic
6. The OSC laser is shut down
7. Power monitoring photodiode detects a LOS on the OSC and OSC-CSM detects LOS
8. Power monitoring photodiode detects a LOS for the optical payload
9. LOS is declared
10. The OSC laser is shut down

The optical switch blocks incoming traffic

When the fiber is repaired, either an automatic or manual restart at the Node A OSC-CSM OSC or at the Node B OSC-CSM OSC is required. A system that has been shut down is reactivated through the use of a restart pulse. The pulse is used to signal that the optical path has been restored and transmission can begin. For example, when the far end, Node B, receives a pulse, it signals to the Node B OSC to begin transmitting its optical signal and for the optical switch to pass incoming traffic. The OSC-CSM at Node A then receives the signal and tells the Node A OSC to resume transmitting and for the optical switch to pass incoming traffic.

Cisco Transport Controller Operation

This chapter describes Cisco Transport Controller (CTC), the software interface for the Cisco ONS 15454. For CTC setup and login information, refer to Chapter 2, "Connect the PC and Log into the GUI."

Note Unless otherwise specified, "ONS 15454" refers to both ANSI and ETSI shelf assemblies.

Chapter topics include:

- 17.1 CTC Software Delivery Methods, page 17-1
- 17.2 CTC Installation Overview, page 17-3
- 17.3 PC and UNIX Workstation Requirements, page 17-4
- 17.4 ONS 15454 Connections, page 17-6
- 17.5 CTC Window, page 17-7
- 17.6 TCC2 Card Reset, page 17-14
- 17.7 TCC2 Card Database, page 17-15
- 17.8 Software Revert, page 17-15

17.1 CTC Software Delivery Methods

ONS 15454 provisioning and administration is performed using the CTC software. CTC is a Java application that is installed in two locations: it is stored on the Advanced Timing, Communications, and Control (TCC2) card and it is downloaded to your workstation the first time you log into the ONS 15454 with a new software release.

17.1.1 CTC Software Installed on the TCC2 Card

CTC software is preloaded on the ONS 15454 TCC2 cards; therefore, you do not need to install software on the TCC2 cards. When a new CTC software version is released, use the release-specific software upgrade document to upgrade the ONS 15454 software on the TCC2 card.

When you upgrade CTC software, the TCC2 cards store the new CTC version as the protect CTC version. When you activate the new CTC software, the TCC2 cards store the older CTC version as the protect CTC version, and the newer CTC release becomes the working version. You can view the software versions that are installed on an ONS 15454 by selecting the Maintenance > Software tabs in node view (Figure 17-1).

Figure 17-1 CTC Software Versions, Node View

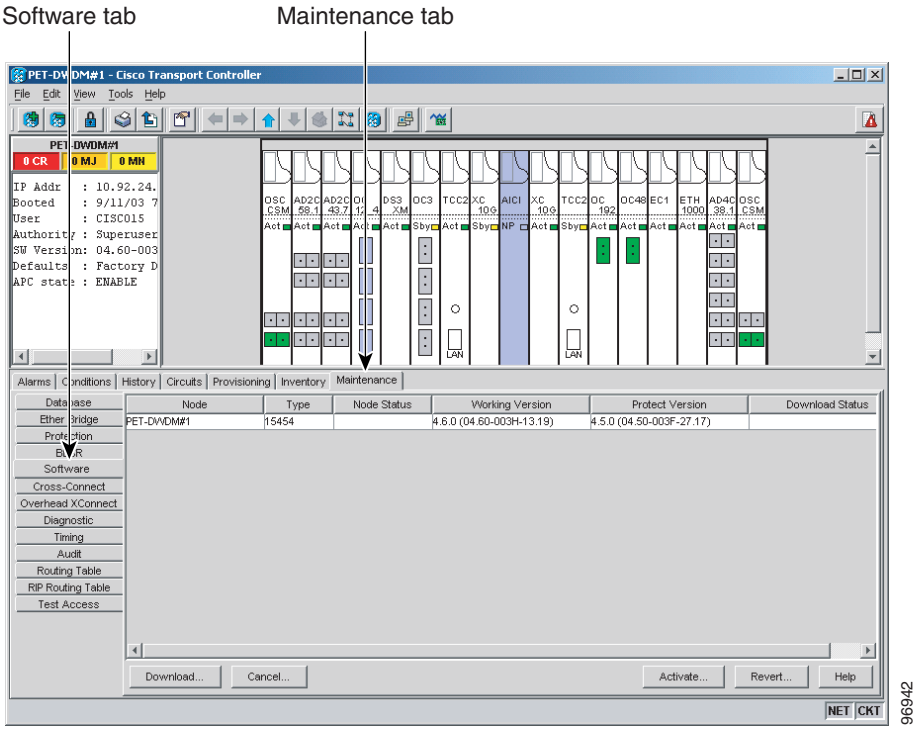

Select the Maintenance > Software tabs in network view to display the software versions installed on all the network nodes (Figure 17-2).

Figure 17-2 CTC Software Versions, Network View

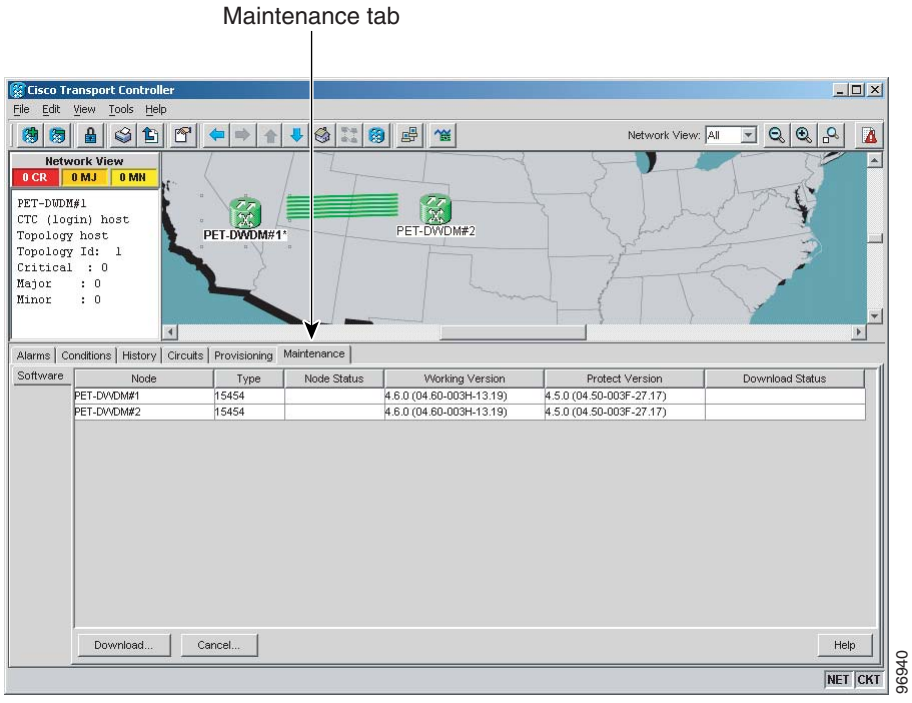

17.1.2 CTC Software Installed on the PC or UNIX Workstation

CTC software is downloaded from the TCC2 cards and installed on your computer automatically after you connect to the ONS 15454 with a new software release for the first time. Downloading the CTC software files automatically ensures that your computer is running the same CTC software version as the TCC2 cards you are accessing. The CTC files are stored in the temporary directory designated by your computer operating system. You can use the Delete CTC Cache button to remove files stored in the temporary directory. If the files are deleted, they download the next time you connect to an ONS 15454. Downloading the Java archive (JAR) files for CTC takes several minutes depending on the bandwidth of the connection between your workstation and the ONS 15454. For example, JAR files downloaded from a modem or a data communications channel (DCC) network link require more time than JAR files downloaded over a LAN connection.

17.2 CTC Installation Overview

To connect to an ONS 15454 using CTC, you enter the ONS 15454 IP address in the URL field of Netscape Navigator or Microsoft Internet Explorer. After connecting to an ONS 15454, the following occurs automatically:

1. A CTC launcher applet is downloaded from the TCC2 card to your computer.
2. The launcher determines whether your computer has a CTC release matching the release on the ONS 15454 TCC2 card.
3. If the computer does not have CTC installed, or if the installed release is older than the TCC2 card's version, the launcher downloads the CTC program files from the TCC2 card.

4. The launcher starts CTC. The CTC session is separate from the web browser session, so the web browser is no longer needed. Always log into nodes having the latest software release. If you log into an ONS 15454 that is connected to ONS 15454s with older versions of CTC, or to Cisco ONS 15327s or Cisco ONS 15600s, CTC files are downloaded automatically to enable you to interact with those nodes. The CTC file download occurs only when necessary, such as during your first login. You cannot interact with nodes on the network that have a software version later than the node that you used to launch CTC.

Each ONS 15454 can handle up to five concurrent CTC sessions. CTC performance can vary, depending upon the volume of activity in each session, network bandwidth, and TCC2 card load.

Note You can also use TL1 commands to communicate with the Cisco ONS 15454 through VT100 terminals and VT100 emulation software, or you can telnet to an ONS 15454 using TL1 port 3083. Refer to the *Cisco ONS 15454 and Cisco ONS 15327 TL1 Command Guide* for a comprehensive list of TL1 commands.

17.3 PC and UNIX Workstation Requirements

To use CTC for the ONS 15454, your computer must have a web browser with the correct Java Runtime Environment (JRE) installed. The correct JRE for each CTC software release is included on the Cisco ONS 15454 software CD and the ONS 15454 documentation CD. If you are running multiple CTC software releases on a network, the JRE installed on the computer must be compatible with the different software releases.

You can change the JRE version on the Preferences dialog box JRE tab. When you change the JRE version on the JRE tab, you must exit and restart CTC for the new JRE version to take effect. Table 17-1 shows JRE compatibility with ONS 15454 software releases.

Table 17-1 JRE Compatibility

ONS Software Release	JRE 1.2.2 Compatible	JRE 1.3 Compatible	JRE 1.4 Compatible
ONS 15454 Release 2.2.1 and earlier	Yes	No	No
ONS 15454 Release 2.2.2	Yes	Yes	No
ONS 15454 Release 3.0	Yes	Yes	No
ONS 15454 Release 3.1	Yes	Yes	No
ONS 15454 Release 3.2	Yes	Yes	No
ONS 15454 Release 3.3	Yes	Yes	No
ONS 15454 Release 3.4	No	Yes	No
ONS 15454 Release 4.0 [1]	No	Yes	No
ONS 15454 Release 4.1	No	Yes	No
ONS 15454 Release 4.5	No	Yes	No
ONS 15454 Release 4.6	No	Yes	Yes
ONS 15454 Release 4.7	No	No	Yes

1. Software Releases 4.0 and later notify you if an older version of the JRE is running on your PC or UNIX workstation.

Table 17-2 lists the requirements for PCs and UNIX workstations. In addition to the JRE, the Java plug-in and modified java.policy file are also included on the ONS 15454 software CD and the ONS 15454 documentation CD.

Table 17-2 Computer Requirements for CTC

Area	Requirements	Notes
Processor	Pentium III 700 MHz, UltraSPARC, or equivalent	700 MHz is the recommended processor speed. You can use computers with a lower processor speed; however, you might experience longer response times and slower performance.
RAM	384 MB RAM recommended, 512 MG RAM optimum	—
Hard drive	20 GB hard drive with 50 MB of space available	—
Operating System	• PC: Windows 98 (1st and 2nd editions), Windows ME, Windows NT 4.0 (with Service Pack 6a), Windows 2000 (with Service Pack 3), or Windows XP Home • Workstation: Solaris versions 8 or 9	—
Java Runtime Environment	JRE 1.4.2	JRE 1.4.2 is installed by the CTC Installation Wizard included on the Cisco ONS 15454 software and documentation CDs. JRE 1.4.2 provides enhancements to CTC performance, especially for large networks with numerous circuits. If CTC must be launched directly from nodes running software earlier than R4.6, uninstall JRE 1.4.2 and reinstall JRE 1.3.1_02, then, to run R4.7, uninstall JRE 1.3.1_02 and reinstall JRE 1.4.2.
Web browser	Netscape 7.x or Internet Explorer 6.x	Netscape 7.x is available at the following site: http://channels.netscape.com/ns/browsers/default.jsp Internet Explorer 6.x is available at the following site: http://www.microsoft.com
Cable	User-supplied CAT-5 straight-through cable with RJ-45 connectors on each end to connect the computer to the ONS 15454 directly or through a LAN	—

17.4 ONS 15454 Connections

You can connect to the ONS 15454 in multiple ways. You can connect your PC directly to the ONS 15454 (local craft connection) using the RJ-45 port on the TCC2 card or, for the ANSI shelf, the LAN pins on the backplane (the ETSI shelf provides a LAN connection via the RJ-45 jack on the MIC-T/C/P FMEC). Alternatively, you can connect your PC to a hub or switch that is connected to the ONS 15454, connect to the ONS 15454 through a LAN or modem, or establish TL1 connections from a PC or TL1 terminal. Table 17-3 lists the ONS 15454 connection methods and requirements.

Table 17-3 ONS 15454 Connection Methods

Method	Description	Requirements
Local craft	Refers to onsite network connections between the CTC computer and the ONS 15454 using one of the following: • The RJ-45 (LAN) port on the TCC2 card • The LAN pins on the ONS 15454 backplane (ANSI) • The RJ-45 jack on the MIC-T/C/P FMEC (ETSI) • A hub or switch to which the ONS 15454 is connected	If you do not use Dynamic Host Configuration Protocol (DHCP), you must change the computer IP address, subnet mask, and default router, or use automatic host detection.
Corporate LAN	Refers to a connection to the ONS 15454 through a corporate or network operations center (NOC) LAN.	• The ONS 15454 must be provisioned for LAN connectivity, including IP address, subnet mask, and default gateway. • The ONS 15454 must be physically connected to the corporate LAN. • The CTC computer must be connected to the corporate LAN that has connectivity to the ONS 15454.
TL1	Refers to a connection to the ONS 15454 using TL1 rather than CTC. TL1 sessions can be started from CTC, or you can use a TL1 terminal. The physical connection can be a craft connection, corporate LAN, or a TL1 terminal.	Refer to the *Cisco ONS 15454 and Cisco ONS 15327 TL1 Command Guide*.
Remote	Refers to a connection made to the ONS 15454 using a modem.	• A modem must be connected to the ONS 15454. • The modem must be provisioned for the ONS 15454. To run CTC, the modem must be provisioned for Ethernet access.

17.5 CTC Window

The CTC window appears after you log into an ONS 15454 (Figure 17-3). The window includes a menu bar, a toolbar, and a top and bottom pane. The top pane provides status information about the selected objects and a graphic of the current view. The bottom pane provides tabs and subtab to view ONS 15454 information and perform ONS 15454 provisioning and maintenance. From this window, you can display three ONS 15454 views: network, node, and card.

Figure 17-3 Node View (Default Login View)

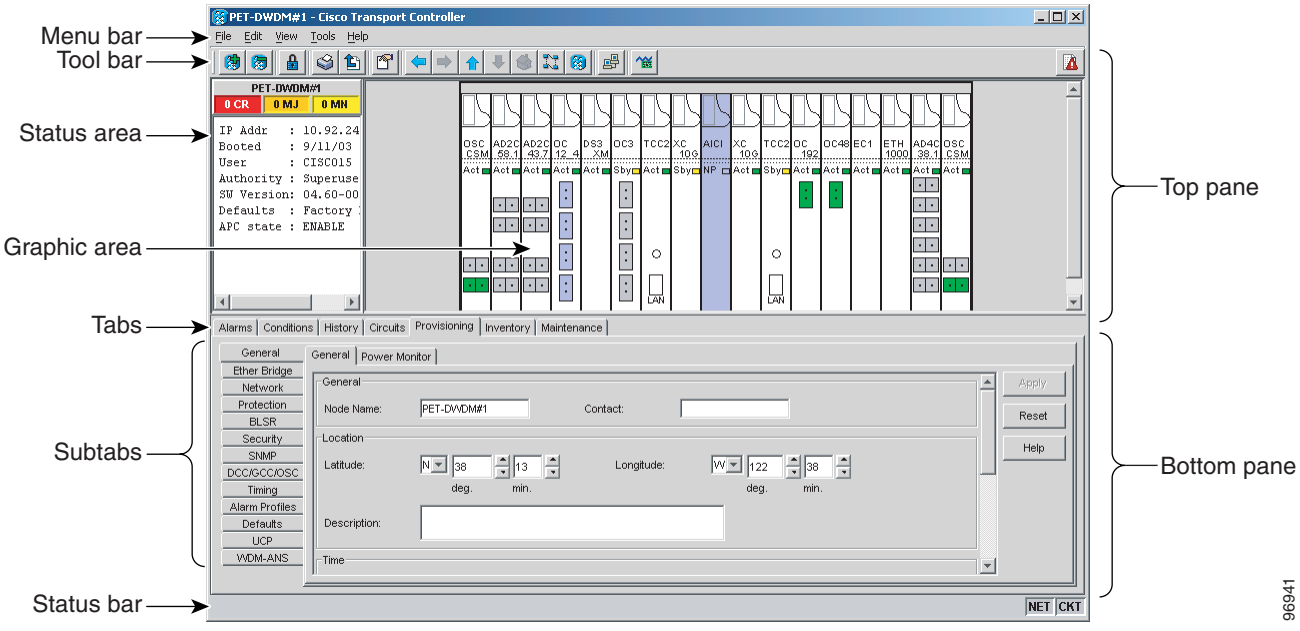

17.5.1 Node View

Node view, shown in Figure 17-3, is the first view that appears after you log into an ONS 15454. The login node is the first node shown, and it is the "home view" for the session. Node view allows you to manage one ONS 15454 node. The status area shows the node name; IP address; session boot date and time; number of Critical (CR), Major (MJ), and Minor (MN) alarms; name and security level of the current logged-in user; software version; and network element default setup.

17.5.1.1 CTC Card Colors

The graphic area of the CTC window depicts the ONS 15454 shelf assembly. The colors of the cards in the graphic reflect the real-time status of the physical card and slot (Table 17-4).

Table 17-4 Node View Card Colors

Card Color	Status
Gray	Slot is not provisioned; no card is installed.
Violet	Slot is provisioned; no card is installed.

Table 17-4 Node View Card Colors (continued)

Card Color	Status
White	Slot is provisioned; a functioning card is installed.
Yellow	Slot is provisioned; a Minor alarm condition exists.
Orange	Slot is provisioned; a Major alarm condition exists.
Red	Slot is provisioned; a Critical alarm exists.

On the ONS 15454 ETSI, the colors of the Front Mount Electrical Connection (FMEC) cards reflect the real-time status of the physical FMEC cards. Table 17-5 lists the FMEC card colors. The FMEC ports shown in CTC do not change color.

Note You cannot preprovision FMECs.

Table 17-5 Node View FMEC Color

Upper Shelf FMEC Color	Status
White	Functioning card is installed.
Yellow	Minor alarm condition exists.
Orange (Amber)	Major alarm condition exists.
Red	Critical alarm exists.

The wording on a card in node view shows the status of a card (Active, Standby, Loading, or Not Provisioned). Table 17-6 lists the card statuses.

Table 17-6 Node View Card Statuses

Card Status	Description
Sty	Card is in standby mode.
Act	Card is active.
NP	Card is not present.
Ldg	Card is resetting.

Port color in both card and node view indicates the port service state. Table 17-7 lists the port colors and their service states. For more information about port service states, refer to Appendix C, "DWDM Enhanced State Model."

Table 17-7 Node View Card Port Colors and Service States

Port Color	Service State	Description
Cyan (blue)	Out-of-Service and Management, Loopback (OOS-MA,LPBK [ANSI]) Locked-enabled,loopback (ETSI)	Port is in a loopback state. On the card in node view, a line between ports indicates that the port is in terminal or facility loopback (see Figure 17-4 and Figure 17-5). Traffic is carried and alarm reporting is suppressed. Raised fault conditions, whether or not their alarms are reported, can be retrieved on the CTC Conditions tab or by using the TL1 RTRV-COND command.
Cyan (blue)	Out-of-Service and Management, Maintenance (OOS-MA,MT [ANSI]) Locked-enabled,maintenance (ETSI)	Port is out-of-service for maintenance. Traffic is carried and loopbacks are allowed. Alarm reporting is suppressed. Raised fault conditions, whether or not their alarms are reported, can be retrieved on the CTC Conditions tab or by using the TL1 RTRV-COND command. Use this service state for testing or to suppress alarms temporarily. Change the state to IS-NR/Unlocked-enabled; OOS-MA,DSBLD/Locked-enabled,disabled; or OOS-AU,AINS/Unlocked-disabled,automaticInService when testing is complete.
Gray	Out-of-Service and Management, Disabled (OOS-MA,DSBLD [ANSI]) Locked-enabled,disabled (ETSI)	The port is out-of-service and unable to carry traffic. Loopbacks are not allowed in this service state.
Green	In-Service and Normal (IS-NR [ANSI]) Unlocked-enabled (ETSI)	The port is fully operational and performing as provisioned. The port transmits a signal and displays alarms; loopbacks are not allowed.
Violet	Out-of-Service and Autonomous, Automatic In-Service (OOS-AU,AINS [ANSI]) Unlocked-disabled,automaticInService (ETSI)	The port is out-of-service, but traffic is carried. Alarm reporting is suppressed. The node monitors the ports for an error-free signal. After an error-free signal is detected, the port stays in this service state for the duration of the soak period. After the soak period ends, the port service state changes to IS-NR/Unlocked-enabled. Raised fault conditions, whether or not their alarms are reported, can be retrieved on the CTC Conditions tab or by using the TL1 RTRV-COND command. The AINS port will automatically transition to IS-NR/Unlocked-enabled when a signal is received for the length of time provisioned in the soak field.

Figure 17-4 Terminal Loopback Indicator

Figure 17-5 Facility Loopback Indicator

17.5.1.2 Node View Card Shortcuts

If you move your mouse over cards in the graphic, popups display additional information about the card including the card type; the card status (active or standby); the type of alarm, such as Critical, Major, or Minor (if any); the alarm profile used by the card; and for transponder (TXP) or muxponder (MXP) cards, the wavelength of the dense wavelength division multiplexing (DWDM) port. Right-click a card to reveal a shortcut menu, which you can use to open, reset, delete, or change a card. Right-click a slot to preprovision a card (that is, provision a slot before installing the card).

17.5.1.3 Node View Tabs

Table 17-8 lists the tabs and subtabs available in the node view.

Table 17-8 Node View Tabs and Subtabs

Tab	Description	Subtabs
Alarms	Lists current alarms (CR, MJ, MN) for the node and updates them in real time.	—
Conditions	Displays a list of standing conditions on the node.	—
History	Provides a history of node alarms including date, type, and severity of each alarm. The Session subtab displays alarms and events for the current session. The Node subtab displays alarms and events retrieved from a fixed-size log on the node.	Session, Node
Circuits	Creates, deletes, edits, and maps circuits.	—
Provisioning	Provisions the ONS 15454 node.	General, Ether Bridge, Network, Protection, BLSR, Security, SNMP, Comm Channels, Timing, Alarm Profiles, Defaults, UCP, WDM-ANS
Inventory	Provides inventory information (part number, serial number, Common Language Equipment Identification [CLEI] codes) for cards installed in the node. Allows you to delete and reset cards and change the card service state.	—
Maintenance	Performs maintenance tasks for the node.	Database, Ether Bridge, Protection, BLSR (ANSI), MS-SPRing (ETSI), Software, Cross-Connect, Overhead XConnect, Diagnostic, Timing, Audit, Routing Table, RIP Routing Table, Test Access, DWDM

17.5.2 Network View

Network view allows you to view and manage ONS 15454s that have DCC connections to the node that you logged into and any login node groups you have selected (Figure 17-6).

Figure 17-6 Network in CTC Network View

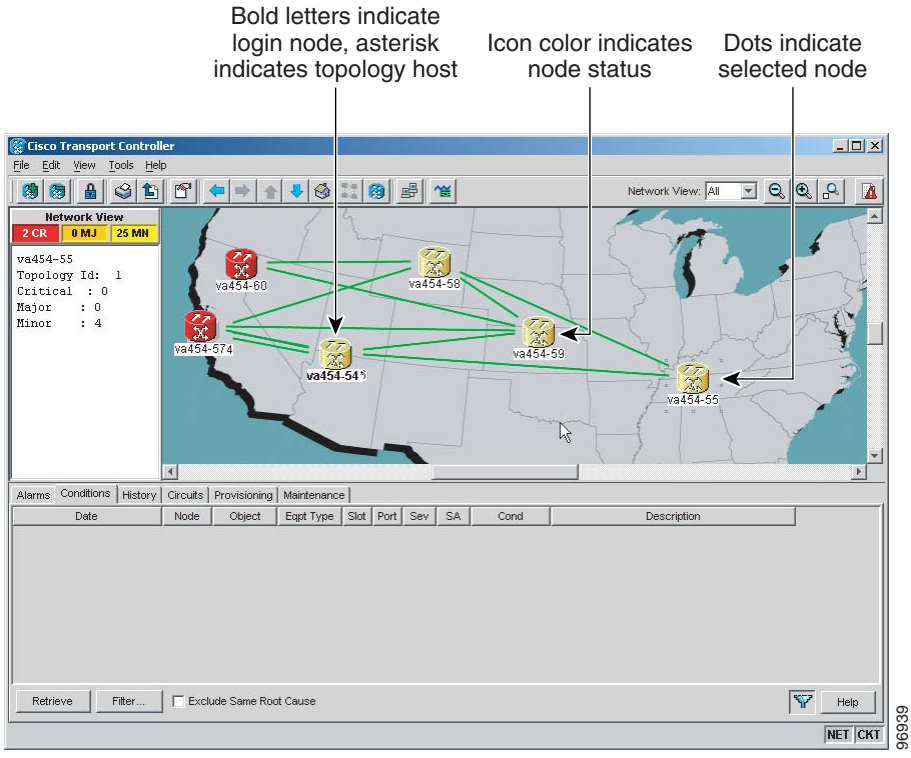

Note Nodes with DCC connections to the login node do not appear if you checked the Disable Network Discovery check box in the Login dialog box.

The graphic area displays a background image with colored ONS 15454 icons. A Superuser can set up the logical network view feature, which enables each user to see the same network view.

The lines show DCC connections between the nodes (Table 17-9). DCC connections can be green (active) or gray (fail). The lines can also be solid (circuits can be routed through this link) or dashed (circuits cannot be routed through this link). Circuit provisioning uses active/routable links. Selecting a node or span in the graphic area displays information about the node and span in the status area.

Table 17-9 DCC Colors Indicating State in Network View

Color and Line Style	State
Green and solid	Active/Routable
Green and dashed	Active/Nonroutable
Gray and solid	Failed/Routable
Gray and dashed	Failed/Nonroutable

The color of a node in network view, shown in Table 17-10, indicates the node alarm status.

Table 17-10 Node Status Shown in Network View

Color	Alarm Status
Green	No alarms
Yellow	Minor alarms
Orange	Major alarms
Red	Critical alarms
Gray with Unknown#	Node initializing for the first time (CTC displays Unknown# because CTC has not discovered the name of the node yet)

Table 17-11 lists the tabs and subtabs available in network view.

Table 17-11 Network View Tabs and Subtabs

Tab	Description	Subtabs
Alarms	Lists current alarms (CR, MJ, MN) for the network and updates them in real time.	—
Conditions	Displays a list of standing conditions on the network.	—
History	Provides a history of network alarms including date, type, and severity of each alarm.	—
Circuits	Creates, deletes, edits, filters, and searches for network circuits.	—
Provisioning	Provisions security, alarm profiles, bidirectional line switched rings (BLSRs) (ANSI), multiplex section-shared protection rings (MS-SPRing) (ETSI), and overhead circuits.	Security, Alarm Profiles, BLSR (ANSI), MS-SPRing (ETSI), Overhead Circuits, Provisionable Patchcords
Maintenance	Displays the type of equipment and the status of each node in the network; displays working and protect software versions; and allows software to be downloaded.	Software

17.5.3 Card View

The card view provides information about individual ONS 15454 cards. Use this window to perform card-specific maintenance and provisioning (Figure 17-7). A graphic showing the ports on the card is shown in the graphic area. The status area displays the node name, slot, number of alarms, card type, equipment type, card status (active or standby), card service state if the card is present, and port service state (described in Table 17-7 on page 17-9). The information that appears and the actions you can perform depend on the card. For more information about card service states, refer to Appendix C, "DWDM Enhanced State Model."

Figure 17-7 CTC Card View Showing a 32DMX-O Card

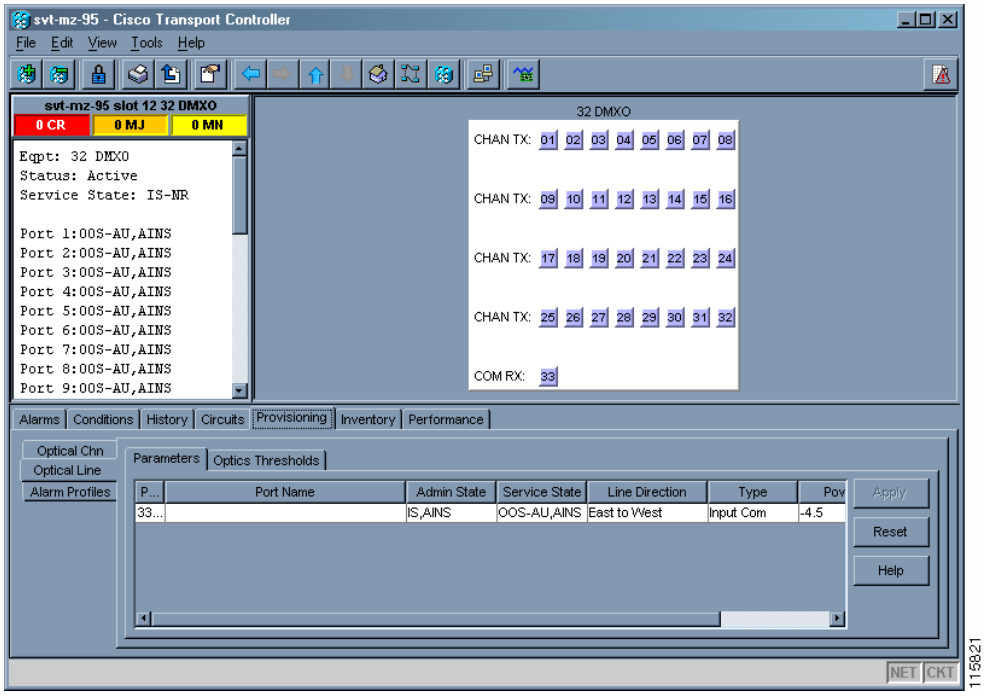

Note CTC provides a card view for all ONS 15454 cards except the TCC2 card.

Use the card view tabs and subtabs shown in Table 17-12 to provision and manage the ONS 15454. The subtabs, fields, and information shown under each tab depend on the card type selected. The Performance tab is not available for the Alarm Interface Controller (AIC) or Alarm Interface Controller–International (AIC-I) cards.

Table 17-12 Card View Tabs and Subtabs

Tab	Description	Subtabs
Alarms	Lists current alarms (CR, MJ, MN) for the card and updates them in real time.	—
Conditions	Displays a list of standing conditions on the card.	—
History	Provides a history of card alarms including date, object, port, and severity of each alarm.	Session (displays alarms and events for the current session), Card (displays alarms and events retrieved from a fixed-size log on the card)
Circuits	Creates, deletes, edits, and search circuits.	—

Table 17-12 Card View Tabs and Subtabs (continued)

Tab	Description	Subtabs
Provisioning	Provisions an ONS 15454 card.	DS-N and OC-N cards: Line, Line Thresholds (different threshold options are available for DS-N and OC-N cards), Elect Path Thresholds, SONET Thresholds, SONET STS, and Alarm Profiles TXP and MXP cards: Card, Line, Line Thresholds, Optics Thresholds, OTN, and Alarm Profiles DWDM cards (subtabs depend on card type): Optical Line, Optical Chn, Optical Amplifier, Parameters, Optics Thresholds, and Alarm Profiles
Maintenance	Performs maintenance tasks for the card.	Loopback, Info, Protection, J1 Path Trace, AINS Soak (options depend on the card type), Automatic Laser Shutdown
Performance	Performs performance monitoring for the card.	DS-N and OC-N cards: no subtabs TXP and MXP cards: Optics PM, Payload PM, OTN PM DWDM cards (subtabs depend on card type): Optical Line, Optical Chn, Optical Amplifier Line, OC3 Line, Parameters, Optics Thresholds
Inventory	Displays an Inventory screen of the ports (TXP and MXP cards only).	—

17.6 TCC2 Card Reset

You can reset the ONS 15454 TCC2 card by using CTC (a soft reset) or by physically reseating a TCC2 card (a hard reset). A soft reset reboots the TCC2 card and reloads the operating system and the application software. Additionally, a hard reset temporarily removes power from the TCC2 card and clears all buffer memory.

You can apply a soft reset from CTC to either an active or standby TCC2 card without affecting traffic. If you need to perform a hard reset on an active TCC2 card, put the TCC2 card into standby mode first by performing a soft reset.

Note When a CTC reset is performed on an active TCC2 card, the AIC and AIC-I cards go through an initialization process and also reset because the AIC and AIC-I cards are controlled by the active TCC2.

17.7 TCC2 Card Database

When dual TCC2 cards are installed in the ONS 15454, each TCC2 card hosts a separate database; therefore, the protect card database is available if the database on the working TCC2 fails. You can also store a backup version of the database on the workstation running CTC. This operation should be part of a regular ONS 15454 maintenance program at approximately weekly intervals, and should also be completed when preparing an ONS 15454 for a pending natural disaster, such as a flood or fire.

Note The following parameters are not backed up and restored: node name, IP address, mask and gateway, and Internet Inter-ORB Protocol (IIOP) port. If you change the node name and then restore a backed up database with a different node name, the circuits map to the new node name. Cisco recommends keeping a record of the old and new node names.

17.8 Software Revert

When you click the Activate button after a software upgrade, the TCC2 copies the current working database and saves it in a reserved location in the TCC2 flash memory. If you later need to revert to the original working software load from the protect software load, the saved database installs automatically. You do not need to restore the database manually or recreate circuits.

The revert feature is useful if a maintenance window closes while you are upgrading CTC software. You can revert to the protect software load without losing traffic. During the next maintenance window, complete the upgrade and activate the new software load.

Circuits created or provisioning done after a software load is activated (upgraded to a higher release) do not reinstate with a revert (for example, 4.0 to 3.4). The database configuration at the time of activation is reinstated after a revert. This does not apply to maintenance reverts (for example, 2.2.2 to 2.2.1), because maintenance releases use the same database.

Security and Timing

This chapter provides information about Cisco ONS 15454 users and node timing. To provision security and timing, see the "NTP-G23 Create Users and Assign Security" procedure on page 3-3.

Note Unless otherwise specified, "ONS 15454" refers to both ANSI and ETSI shelf assemblies.

Chapter topics include:

- 18.1 Users and Security, page 18-1
- 18.2 Node Timing, page 18-6

18.1 Users and Security

The Cisco Transport Controller (CTC) ID is provided with the ONS 15454 system, but the system does not display the user ID when you sign into CTC. This ID can be used to set up other ONS 15454 users.

You can have up to 500 user IDs on one ONS 15454. Each CTC or TL1 user can be assigned one of the following security levels:

- Retrieve—Users can retrieve and view CTC information but cannot set or modify parameters.
- Maintenance—Users can access only the ONS 15454 maintenance options.
- Provisioning—Users can access provisioning and maintenance options.
- Superusers—Users can perform all of the functions of the other security levels as well as set names, passwords, and security levels for other users.

By default, multiple concurrent user ID sessions are permitted on the node, that is, multiple users can log into a node using the same user ID. However, you can provision the node to allow only a single login per user and prevent concurrent logins for all users.

Note You must add the same user name and password to each node the user accesses.

18.1.1 Security Requirements

Table 18-1 shows the actions that each user privilege level can perform in node view.

Table 18-1 ONS 15454 Security Levels—Node View

CTC Tab	Subtab	[Subtab]:Actions	Retrieve	Maintenance	Provisioning	Superuser
Alarms	—	Synchronize/Filter/Delete Cleared Alarms	X	X	X	X
Conditions	—	Retrieve/Filter	X	X	X	X
History	Session	Filter	X	X	X	X
	Node	Retrieve/Filter	X	X	X	X
Circuits	—	Create/Edit/Delete	—	—	X	X
		Filter/Search	X	X	X	X
Provisioning	General	General: Edit	—	—	Partial[1]	X
		Power Monitor: Edit	—	—	X	X
	EtherBridge	Spanning trees: Edit	—	—	X	X
	Network	General: All	—	—	—	X
		Static Routing: Create/Edit/ Delete	—	—	X	X
		OSPF: Create/Edit/Delete	—	—	X	X
		RIP: Create/Edit/Delete	—	—	X	X
		Proxy: Create/Delete	—	—	—	X
		Firewall: Create/Delete	—	—	—	X
	Protection	Create/Delete/Edit	—	—	X	X
		View	X	X	X	X
	BLSR (ANSI)	Create/Edit/Delete	—	—	X	X
	MS-SPRing (ETSI)	Ring Map/Squelch Table/RIP Table	X	X	X	X
	Security	Users: Create/Delete	—	—	—	X
		Users: Change	Same user	Same user	Same user	All users
		Users: Clear Security Intrusion	—	—	—	X
		Active Logins: Logout	—	—	—	X
		Policy: Edit	—	—	—	X
		Access: Edit	—	—	—	X
		Legal Disclaimer: Edit	—	—	—	X
	SNMP	Create/Delete/Edit	—	—	X	X
		Browse trap destinations	X	X	X	X

Table 18-1 ONS 15454 Security Levels—Node View (continued)

CTC Tab	Subtab	[Subtab]:Actions	Retrieve	Maintenance	Provisioning	Superuser
Provisioning (continued)	Comm Channels	SDCC: Create/Edit/Delete	—	—	X	X
		LDCC: Create/Edit/Delete	—	—	X	X
		GCC: Create/Edit/Delete	—	—	X	X
		OSC: OSC Terminations: Create/Edit/Delete	—	—	X	X
		OSC: DWDM Ring ID: Create/Edit/Delete	—	X	X	X
		Provisionable Patchcords: Create/Delete	—	—	X	X
	Alarm Profiles	Alarm Behavior: Edit	—	—	X	X
		Alarm Profiles Editor: Load/Store/Delete[2]	—	—	X	X
		Alarm Profile Editor: New/Compare/Available/Usage	X	X	X	X
	Defaults	Edit/Import	—	—	—	X
		Export	X	X	X	X
	UCP	Node: Edit/Provision	—	—	X	X
		Neighbor: Create/Edit/Delete	—	—	X	X
		IPCC: Create/Edit/Delete	—	—	X	X
		Interface: Create/Edit/Delete	—	—	X	X
		Circuit: Create/Edit/Delete	—	—	X	X
	WDM-ANS	Provisioning: Import	—	—	—	X
		Provisioning: Export	X	X	X	X
		Connections: Create/Edit/Delete/Commit/ Calculate	—	—	X	X
		Port Status: Launch	—	—	X	X
Inventory	—	Delete	—	—	X	X
		Reset	—	X	X	X
Maintenance	Database	Backup	—	X	X	X
		Restore	—	—	—	X
	EtherBridge	Spanning Trees: View	X	X	X	X
		MAC Table: Retrieve	X	X	X	X
		MAC Table: Clear/Clear All	—	X	X	X
		Trunk Utilization: Refresh	X	X	X	X
		Circuits: Refresh	X	X	X	X

Table 18-1 ONS 15454 Security Levels—Node View (continued)

CTC Tab	Subtab	[Subtab]:Actions	Retrieve	Maintenance	Provisioning	Superuser
Maintenance (continued)	Protection	Switch/Lock out/Lockon/ Clear/ Unlock	X	X	X	X
	BLSR (ANSI)	West/East Switches	—	—	X	X
	MS-SPRing (ETSI)	Reset	—	X	X	X
	Software	Download	—	X	X	X
		Activate/Revert	—	—	—	X
	Cross-Connect	Cards: Switch/Lock/Unlock	—	X	X	X
		Resource Usage: Delete	—	—	X	X
	Overhead XConnect	View	X	X	X	X
	Diagnostic	Retrieve/Lamp Test	—	X	X	X
	Timing	Source: Edit	—	X	X	X
		Timing Report: View/Refresh	X	X	X	X
	Audit	Retrieve/Archive	—	—	—	X
	Routing Table	Retrieve	X	X	X	X
	RIP Routing Table	Retrieve	X	X	X	X
	Test Access	Read-only	X	X	X	X
	DWDM	APC: Run/Disable/Refresh	—	X	X	X
		WDM Span Check: Retrieve Span Loss values, Reset	X	X	X	X
		Power Monitoring: Refresh	X	X	X	X

1. Provisioner user cannot change node name, contact, or AIS-V insertion on STS-1 signal degrade (SD) parameters.
2. The action buttons in the subtab are active for all users, but the actions can be completely performed only by the users assigned with the required security levels.

Table 18-2 shows the actions that each user privilege level can perform in network view.

Table 18-2 ONS 15454 Security Levels—Network View

CTC Tab	Subtab	[Subtab]: Actions	Retrieve	Maintenance	Provisioning	Superuser
Alarms	—	Synchronize/Filter/Delete cleared alarms	X	X	X	X
Conditions	—	Retrieve/Filter	X	X	X	X
History	—	Filter	X	X	X	X
Circuits	—	Create/Edit/Delete	—	—	X	X
		Filter/Search	X	X	X	X

Table 18-2 ONS 15454 Security Levels—Network View (continued)

CTC Tab	Subtab	[Subtab]: Actions	Retrieve	Maintenance	Provisioning	Superuser
Provisioning	Security	Users: Create/Delete	—	—	—	X
		Users: Change	Same User	Same User	Same User	All Users
		Active logins: Logout	—	—	—	X
		Policy: Change	—	—	—	X
	Alarm Profiles	New/Load/Store/Delete[1]	—	—	X	X
		Compare/Available/Usage	X	X	X	X
	BLSR (ANSI) MS-SPRing (ETSI)	Create/Edit/Delete/Upgrade	—	—	X	X
	Overhead Circuits	Create/Delete/Edit/Merge	—	—	X	X
		Search	X	X	X	X
	Provisionable Patchcords	Create/ Delete	—	—	X	X
Maintenance	Software	Download/Cancel	X	X	X	X

1. The action buttons in the subtab are active for all users, but the actions can be completely performed only by the users assigned with the required security levels.

18.1.2 Security Policies

Users with Superuser security privilege can provision security policies on the ONS 15454. These security policies include idle user timeouts, password changes, password aging, and user lockout parameters. In addition, a Superuser can access the ONS 15454 through the TCC2 RJ-45 port, the backplane LAN connection, or both.

18.1.2.1 Idle User Timeout

Each ONS 15454 CTC or TL1 user can be idle during his or her login session for a specified amount of time before the CTC window is locked. The lockouts prevent unauthorized users from making changes. Higher-level users have shorter default idle periods and lower-level users have longer or unlimited default idle periods, as shown in Table 18-3. The user idle period can be modified by a Superuser; refer to the "NTP-G88 Modify Users and Change Security" procedure on page 9-34.

Table 18-3 ONS 15454 Default User Idle Times

Security Level	Idle Time
Superuser	15 minutes
Provisioning	30 minutes
Maintenance	60 minutes
Retrieve	Unlimited

18.1.2.2 User Password, Login, and Access Policies

Superusers can view real-time lists of users who are logged into CTC or TL1 user logins by node. Superusers can also provision the following password, login, and node access policies:

- Password expirations and reuse—Superusers can specify when users must change their passwords and when they can reuse them.
- Login attempts—Superusers can specify the maximum number of times a user is allowed to attempt to login to CTC.
- Locking out and disabling users—Superusers can provision the number of invalid logins that are allowed before locking out users and the length of time before inactive users are disabled. The number of allowed lockout attempts is set to the number of allowed login attempts.
- Node access and user sessions—Superusers can limit the number of CTC sessions one user can have, and they can prohibit access to the ONS 15454 using the LAN or TCC2 RJ-45 connections.

  In addition, a Superuser can select secure shell (SSH) instead of Telnet at the CTC Provisioning > Security > Access tabs. SSH is a terminal-remote host Internet protocol that uses encrypted links. It provides authentication and secure communication over unsecure channels. Port 22 is the default port and cannot be changed.

18.1.2.3 Audit Trail

Audit trails prove useful for maintaining security, recovering lost transactions, and enforcing accountability. Accountability refers to tracing user activities; that is, associating a process or action with a specific user.

The ONS 15454 maintains a 640-entry, human-readable audit trail of user or system actions such as login, logout, circuit creation or deletion, and user- or system-generated actions. Login events include authorized Cisco logins using the ONS 15454 command line interface (CLI) or CTC, the ONS 15454 graphical user interface. You can move the log to a local or network drive for later review. The ONS 15454 generates an event to indicate when the log is 80 percent full, and another event to indicate that the oldest log entries are being overwritten.

Table 18-4 contains the columns listed in Audit Trail window.

Table 18-4 Audit Trail Window Columns

Heading	Explanation
Date	Date when the action occurred
Num	Incrementing count of actions
User	User ID that initiated the action
P/F	Pass/Fail (whether or not the action was executed)
Operation	Action that was taken

18.2 Node Timing

SONET timing parameters must be set for each ONS 15454. Each ONS 15454 independently accepts its timing reference from one of three sources:

- The building integrated timing supply (BITS) pins on the ONS 15454 backplane (ANSI) or MIC-C/T/P coaxial connectors (ETSI).

- An OC-N/STM-N card installed in the ONS 15454. The card is connected to a node that receives timing through a BITS source.
- The internal ST3 clock on the TCC2 card.

You can set ONS 15454 timing to one of three modes: external, line, or mixed. If timing is coming from the BITS pins, set ONS 15454 timing to external. If the timing comes from an OC-N/STM-N card, set the timing to line. In typical ONS 15454 networks:

- One node is set to external. The external node derives its timing from a BITS source wired to the BITS backplane pins. The BITS source, in turn, derives its timing from a primary reference source (PRS) such as a Stratum 1 clock or global positioning satellite (GPS) signal.
- The other nodes are set to line. The line nodes derive timing from the externally timed node through the OC-N trunk (span) cards. The MSTP normally derives timing from the line using the OSCM or OSC-CSM card that are inside an OC-3/STM-1 channel.

You can set three timing references for each ONS 15454. The first two references are typically two BITS-level sources, or two line-level sources optically connected to a node with a BITS source. The third reference is usually assigned to the internal clock provided on every ONS 15454 TCC2 card. However, if you assign all three references to other timing sources, the internal clock is always available as a backup timing reference. The internal clock is a Stratum 3 (ST3), so if an ONS 15454 node becomes isolated, timing is maintained at the ST3 level.

The CTC Maintenance > Timing > Report tabs show current timing information for an ONS 15454, including the timing mode, clock state and status, switch type, and reference data.

Caution Mixed timing allows you to select both external and line timing sources. However, Cisco does not recommend its use because it can create timing loops. Use this mode with caution.

18.2.1 Network Timing Example

Figure 18-1 shows an ONS 15454 network timing setup example. Node 1 is set to external timing. Two timing references are set to BITS. These are Stratum 1 timing sources wired to the BITS input pins on the Node 1 backplane. The third reference is set to internal clock. The BITS output pins on the backplane of Node 3 are used to provide timing to outside equipment, such as a digital access line access multiplexer.

In the example, Slots 5 and 6 contain the trunk (span) cards. Timing at Nodes 2, 3, and 4 is set to line, and the timing references are set to the trunk cards based on distance from the BITS source. Reference 1 is set to the trunk card closest to the BITS source. At Node 2, Reference 1 is Slot 5 because it is connected to Node 1. At Node 4, Reference 1 is set to Slot 6 because it is connected to Node 1. At Node 3, Reference 1 could be either trunk card because they are equal distance from Node 1.

Figure 18-1 ONS 15454 Timing Example

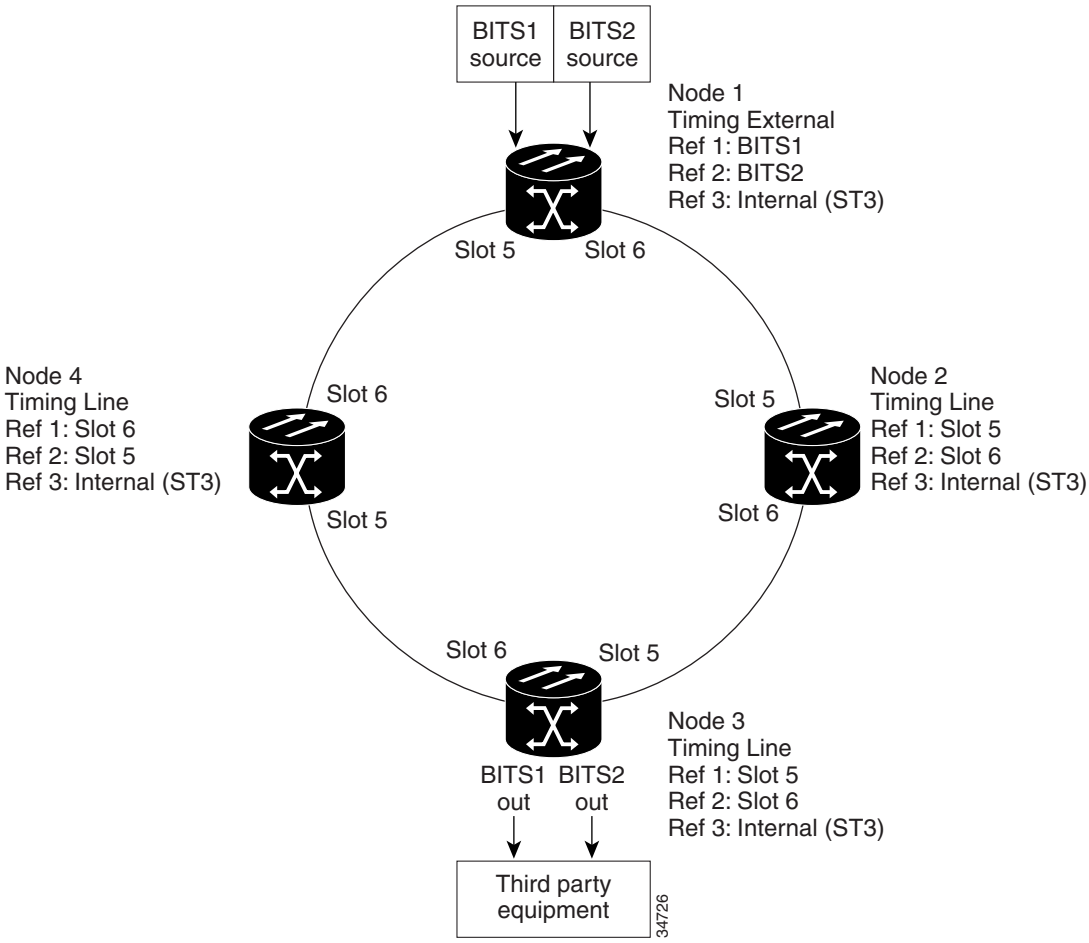

18.2.2 Synchronization Status Messaging

Synchronization status messaging (SSM) is a SONET protocol that communicates information about the quality of the timing source. SSM messages are carried on the S1 byte of the SONET Line layer. They enable SONET devices to automatically select the highest quality timing reference and to avoid timing loops.

SSM messages are either Generation 1 or Generation 2. Generation 1 is the first and most widely deployed SSM message set. Generation 2 is a newer version. If you enable SSM for the ONS 15454, consult your timing reference documentation to determine which message set to use. Table 18-5 and Table 18-6 on page 18-9 show the Generation 1 and Generation 2 message sets.

Table 18-5 SSM Generation 1 Message Set

Message	Quality	Description
PRS	1	Primary reference source—Stratum 1
STU	2	Synchronization traceability unknown
ST2	3	Stratum 2

Table 18-5 SSM Generation 1 Message Set (continued)

Message	Quality	Description
ST3	4	Stratum 3
SMC	5	SONET minimum clock
ST4	6	Stratum 4
DUS	7	Do not use for timing synchronization
RES	—	Reserved; quality level set by user

Table 18-6 SSM Generation 2 Message Set

Message	Quality	Description
PRS	1	Primary reference source—Stratum 1
STU	2	Synchronization traceability unknown
ST2	3	Stratum 2
TNC	4	Transit node clock
ST3E	5	Stratum 3E
ST3	6	Stratum 3
SMC	7	SONET minimum clock
ST4	8	Stratum 4
DUS	9	Do not use for timing synchronization
RES	—	Reserved; quality level set by user

CTC Connectivity Reference

This chapter provides eight scenarios showing Cisco ONS 15454s in common IP network configurations. The chapter does not provide a comprehensive explanation of IP networking concepts and procedures. For IP setup instructions, see the "DLP-G56 Provision IP Settings" task on page 3-9.

Note Unless otherwise specified, "ONS 15454" refers to both ANSI and ETSI shelf assemblies.

Chapter topics include:

- 19.1 IP Networking Overview, page 19-1
- 19.2 IP Addressing Scenarios, page 19-2
- 19.3 Provisionable Patchcords, page 19-19
- 19.4 Routing Table, page 19-21
- 19.5 External Firewalls, page 19-22
- 19.6 Open GNE, page 19-24

Note To connect ONS 15454s to an IP network, you must work with a LAN administrator or other individual at your site who has IP networking training and experience.

19.1 IP Networking Overview

ONS 15454s can be connected in many different ways within an IP environment:

- They can be connected to LANs through direct connections or a router.
- IP subnetting can create ONS 15454 node groups that allow you to provision non-data communication channel (DCC) connected nodes in a network.
- Different IP functions and protocols can be used to achieve specific network goals. For example, Proxy Address Resolution Protocol (ARP) enables one LAN-connected ONS 15454 to serve as a gateway for ONS 15454s that are not connected to the LAN.
- Static routes can be created to enable connections among multiple Cisco Transport Controller (CTC) sessions with ONS 15454s that reside on the same subnet with multiple CTC sessions.
- ONS 15454s can be connected to Open Shortest Path First (OSPF) networks so ONS 15454 network information is automatically communicated across multiple LANs and WANs.

- The ONS 15454 proxy server can control the visibility and accessibility between CTC computers and ONS 15454 element nodes.

19.2 IP Addressing Scenarios

ONS 15454 IP addressing generally has eight common scenarios or configurations. Use the scenarios as building blocks for more complex network configurations. Table 19-1 provides a general list of items to check when setting up ONS 15454s in IP networks.

Table 19-1 General ONS 15454 IP Troubleshooting Checklist

Item	What to Check
Link integrity	Verify that link integrity exists between: • CTC computer and network hub/switch • ONS 15454s (backplane [ANSI] or MIC-C/T/P [ETSI] wire-wrap pins or RJ-45 port) and network hub/switch • Router ports and hub/switch ports
ONS 15454 hub/switch ports	If connectivity problems occur, set the hub or switch port that is connected to the ONS 15454 to 10 Mbps half-duplex.
Ping	Ping the node to test connections between computers and ONS 15454s.
IP addresses/subnet masks	Verify that ONS 15454 IP addresses and subnet masks are set up correctly.
Optical connectivity	Verify that ONS 15454 optical trunk ports are in service and that a DCC is enabled on each trunk port.

19.2.1 Scenario 1: CTC and ONS 15454s on Same Subnet

Scenario 1 shows a basic ONS 15454 LAN configuration (Figure 19-1). The ONS 15454s and CTC computer reside on the same subnet. All ONS 15454s connect to LAN A, and all ONS 15454s have DCC connections.

Figure 19-1 Scenario 1: CTC and ONS 15454s on Same Subnet (ANSI and ETSI)

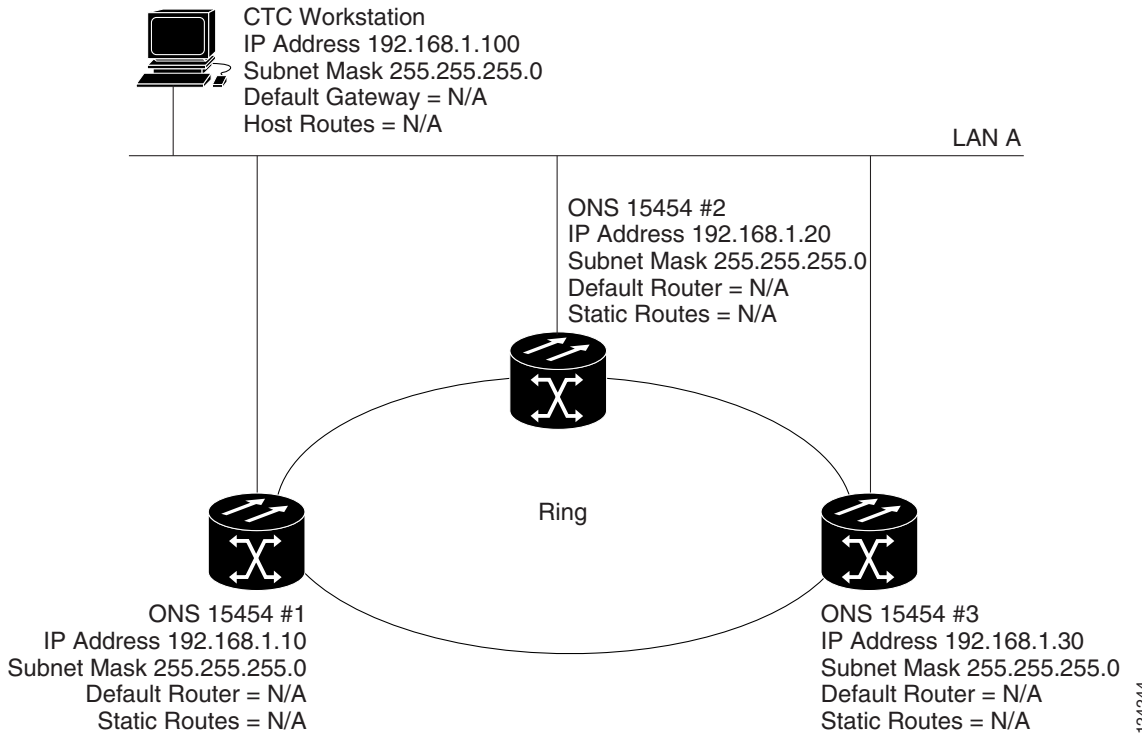

19.2.2 Scenario 2: CTC and ONS 15454s Connected to a Router

In Scenario 2, the CTC computer resides on a subnet (192.168.1.0) and attaches to LAN A (Figure 19-2). The ONS 15454s reside on a different subnet (192.168.2.0) and attach to LAN B. A router connects LAN A to LAN B. The IP address of router interface A is set to LAN A (192.168.1.1), and the IP address of router interface B is set to LAN B (192.168.2.1). The routers each have a subnet mask of 255.255.255.0.

On the CTC computer, the default gateway is set to router interface A. If the LAN uses DHCP (Dynamic Host Configuration Protocol), the default gateway and IP address are assigned automatically. In the Figure 19-2 example, a DHCP server is not available.

Figure 19-2 Scenario 2: CTC and ONS 15454s Connected to Router (ANSI and ETSI)

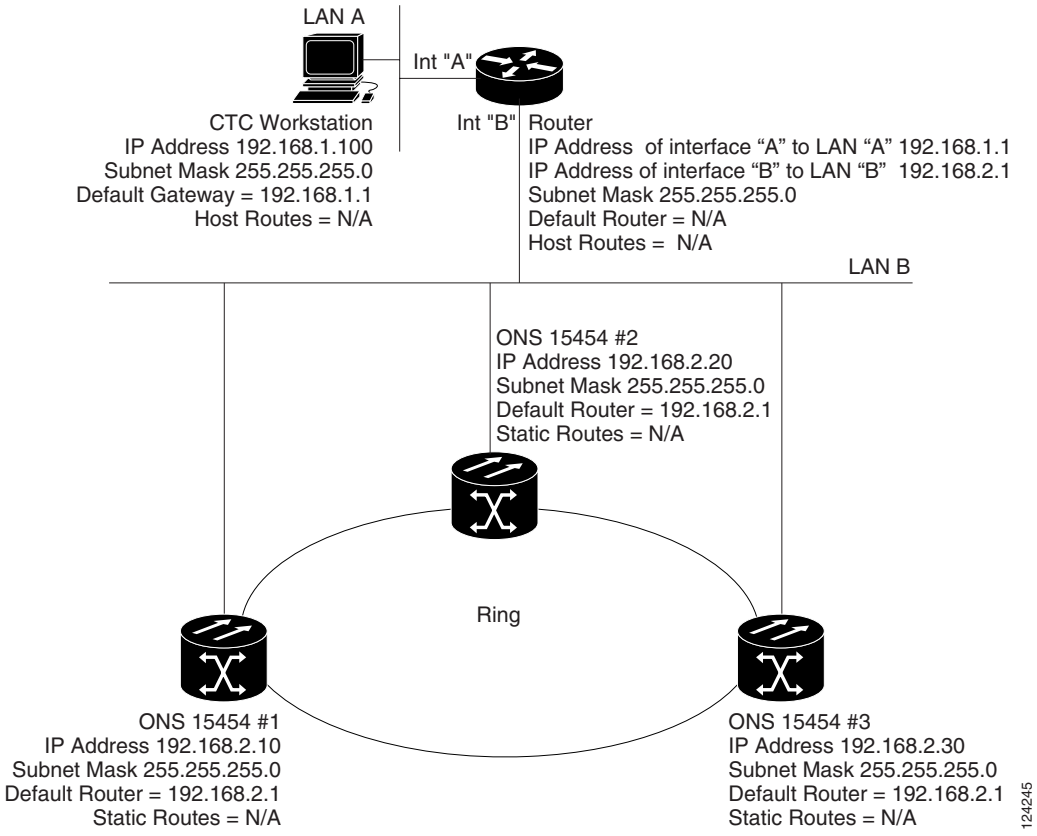

19.2.3 Scenario 3: Using Proxy ARP to Enable an ONS 15454 Gateway

ARP matches higher-level IP addresses to the physical addresses of the destination host. It uses a lookup table (called ARP cache) to perform the translation. When the address is not found in the ARP cache, a broadcast is sent out on the network with a special format called the ARP request. If one of the machines on the network recognizes its own IP address in the request, it sends an ARP reply back to the requesting host. The reply contains the physical hardware address of the receiving host. The requesting host stores this address in its ARP cache so that all subsequent datagrams (packets) to this destination IP address can be translated to a physical address.

Proxy ARP enables one LAN-connected ONS 15454 to respond to the ARP request for ONS 15454s not connected to the LAN. (ONS 15454 proxy ARP requires no user configuration.) For this to occur, the DCC-connected ONS 15454s must reside on the same subnet as the LAN-connected (gateway) ONS 15454. When a LAN device sends an ARP request to an ONS 15454 that is not connected to the LAN, the gateway ONS 15454 (the one connected to the LAN) returns its MAC address to the LAN device. The LAN device then sends the datagram for the remote ONS 15454 to the MAC address of the proxy ONS 15454. The proxy ONS 15454 uses its routing table to forward the datagram to the non-LAN ONS 15454.

Scenario 3 is similar to Scenario 1, but only one ONS 15454 (Node 1) connects to the LAN (Figure 19-3). Two ONS 15454s (Node 2 and Node 3) connect to ONS 15454 Node 1 through the section DCC. Because all three ONS 15454s are on the same subnet, proxy ARP enables ONS 15454 Node 1 to serve as a gateway for ONS 15345 Node 2 and Node 3.

Note This scenario assumes all CTC connections are to Node 1. If you connect a laptop to either ONS 15454 Node 2 or Node 3, network partitioning occurs; neither the laptop or the CTC computer can see all nodes. If you want laptops to connect directly to end network elements, you must create static routes (see Scenario 5) or enable the ONS 15454 proxy server (see Scenario 7).

Be aware that:

- GNE and ENE 15454 proxy ARP is disabled.
- There is exactly one proxy ARP server on any given Ethernet segment; however, there may be more than one server in an ANSI or ETSI topology.
- The proxy ARP server does not perform the proxy ARP function for any node or host that is on the same Ethernet segment.
- It is important in Figure 19-3 that the CTC workstation be located within the same subnet and on the same Ethernet segment as the proxy ARP server.

Figure 19-3 Scenario 3: Using Proxy ARP (ANS and ETSII

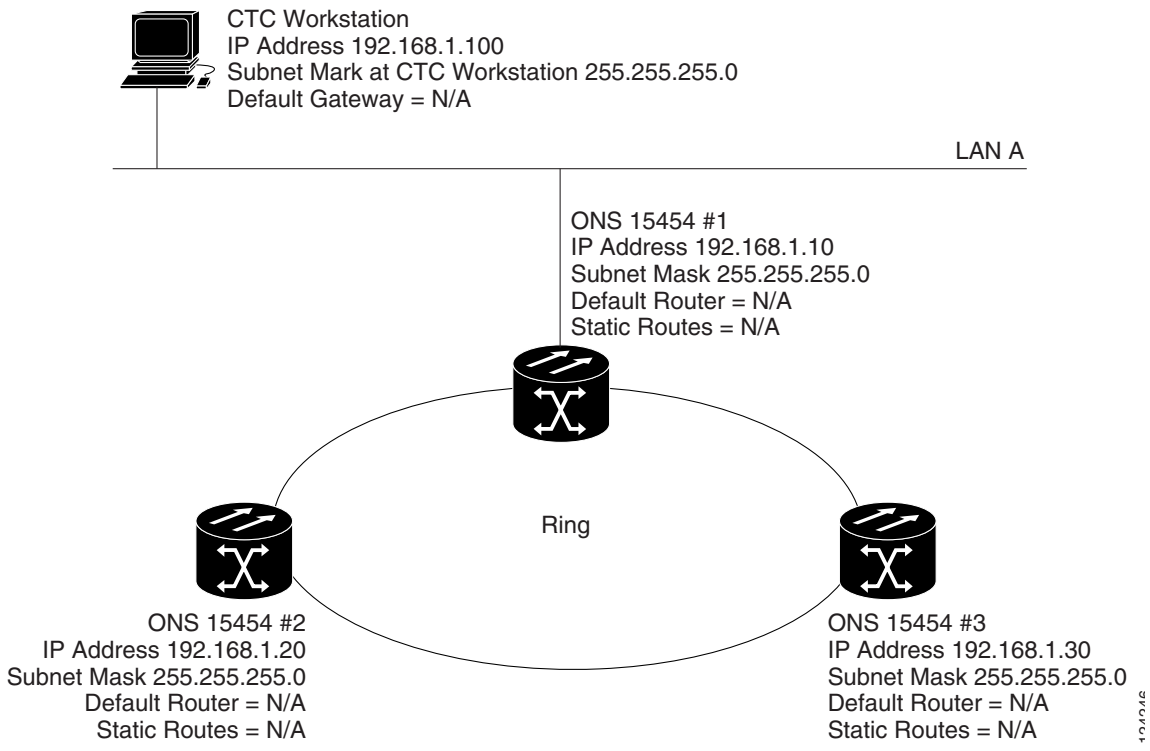

You can also use proxy ARP to communicate with hosts attached to the craft Ethernet ports of DCC-connected nodes (Figure 19-4). The node with an attached host must have a static route to the host. Static routes are propagated to all DCC peers using OSPF. The existing proxy ARP node is the gateway

for additional hosts. Each node examines its routing table for routes to hosts that are not connected to the DCC network but are within the subnet. The existing proxy server replies to ARP requests for these additional hosts with the node MAC address. The existence of the host route in the routing table ensures that the IP packets addressed to the additional hosts are routed properly. Other than establishing a static route between a node and an additional host, no provisioning is necessary. The following restrictions apply:

- Only one node acts as the proxy ARP server for any given additional host.
- A node cannot be the proxy ARP server for a host connected to its Ethernet port.

In Figure 19-4, Node 1 announces to Node 2 and 3 that it can reach the CTC host. Similarly, Node 3 announces that it can reach the ONS 152xx. The ONS 152xx is shown as an example; any network element can be set up as an additional host.

Figure 19-4 Scenario 3: Using Proxy ARP with Static Routing (ANSI and ETSI)

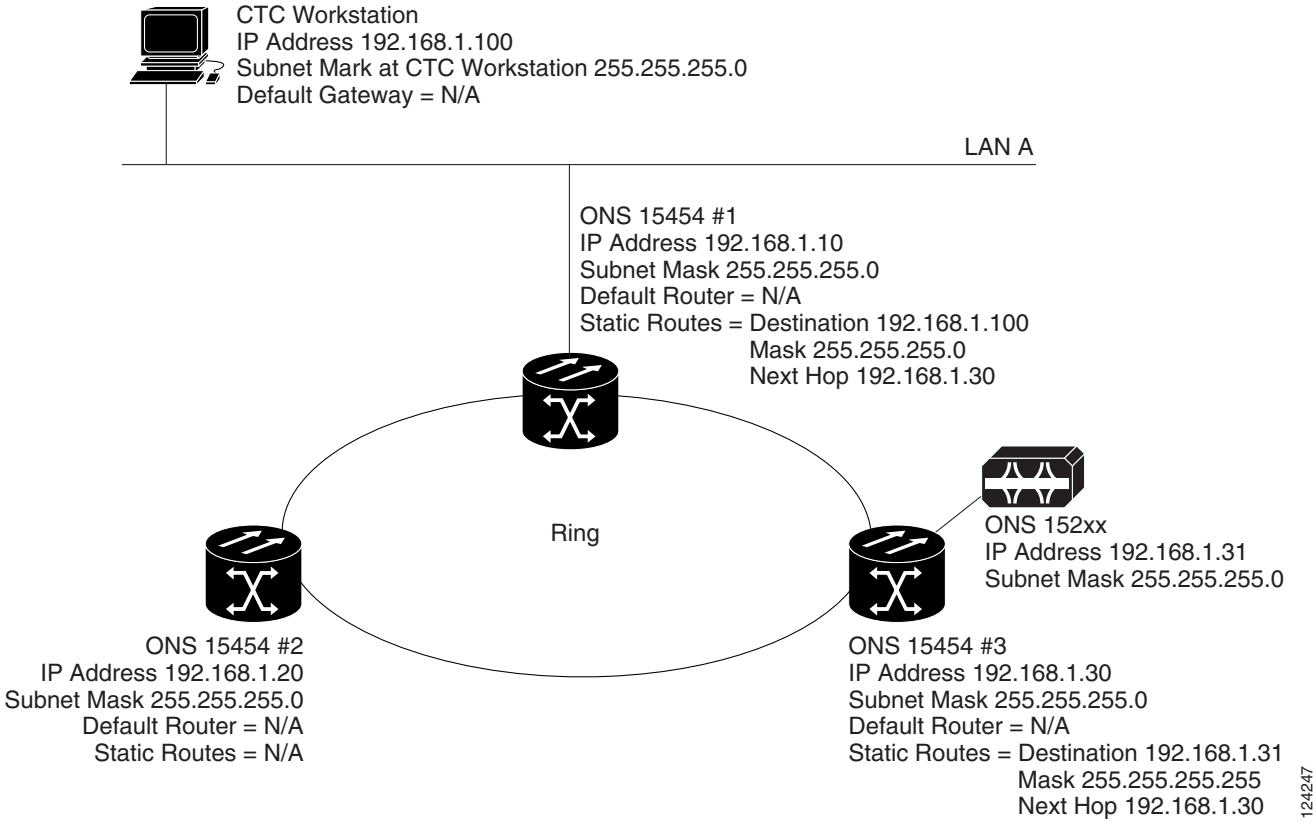

19.2.4 Scenario 4: Default Gateway on CTC Computer

Scenario 4 is similar to Scenario 3, but Nodes 2 and 3 reside on different subnets, 192.168.2.0 and 192.168.3.0, respectively (Figure 19-5). Node 1 and the CTC computer are on subnet 192.168.1.0. Proxy ARP is not used because the network includes different subnets. For the CTC computer to communicate with Nodes 2 and 3, Node 1 is entered as the default gateway on the CTC computer.

Figure 19-5 Scenario 4: Default Gateway on a CTC Computer (ANSI and ETSI)

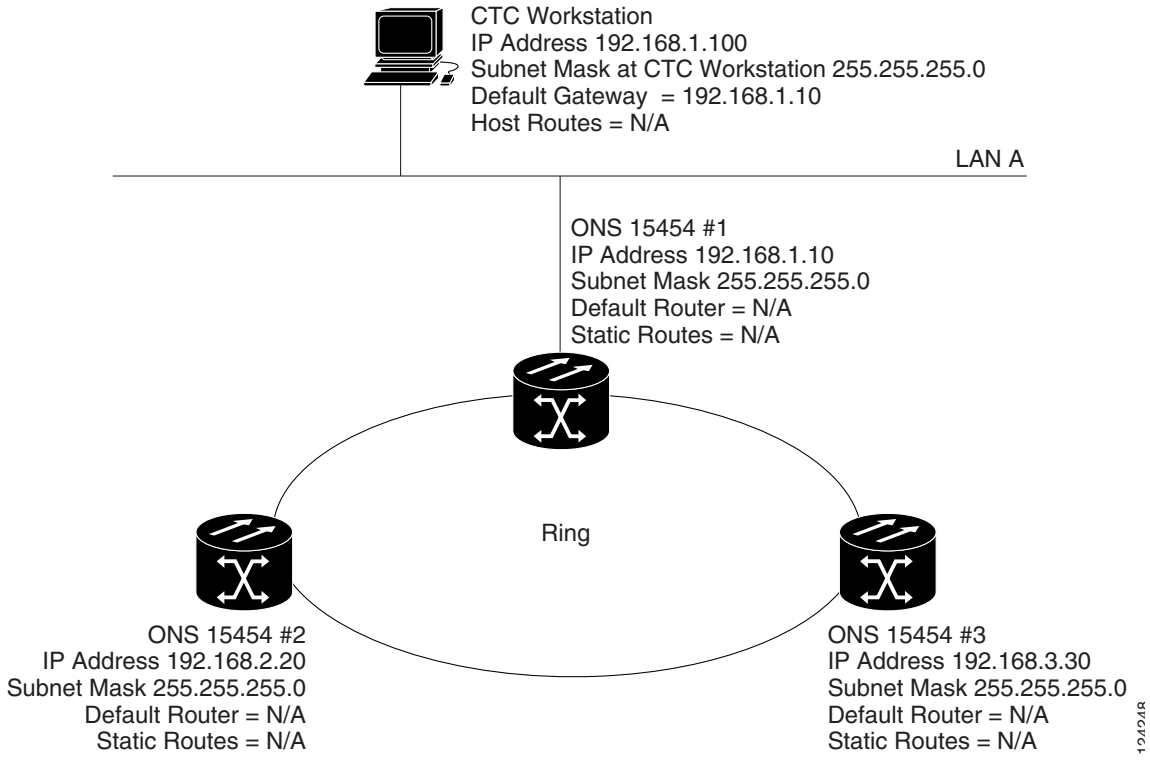

19.2.5 Scenario 5: Using Static Routes to Connect to LANs

Static routes are used for two purposes:

- To connect ONS 15454s to CTC sessions on one subnet connected by a router to ONS 15454s residing on another subnet. (These static routes are not needed if OSPF is enabled. Scenario 6 shows an OSPF example.)
- To enable multiple CTC sessions among ONS 15454s residing on the same subnet.

In Figure 19-6, one CTC residing on subnet 192.168.1.0 connects to a router through interface A (the router is not set up with OSPF). ONS 15454s residing on different subnets are connected through Node 1 to the router through interface B. Because Nodes 2 and 3 are on different subnets, proxy ARP does not enable Node 1 as a gateway. To connect to CTC computers on LAN A, a static route is created on Node 1.

Figure 19-6 Scenario 5: Static Route With One CTC Computer Used as a Destination (ANSI and ETSI)

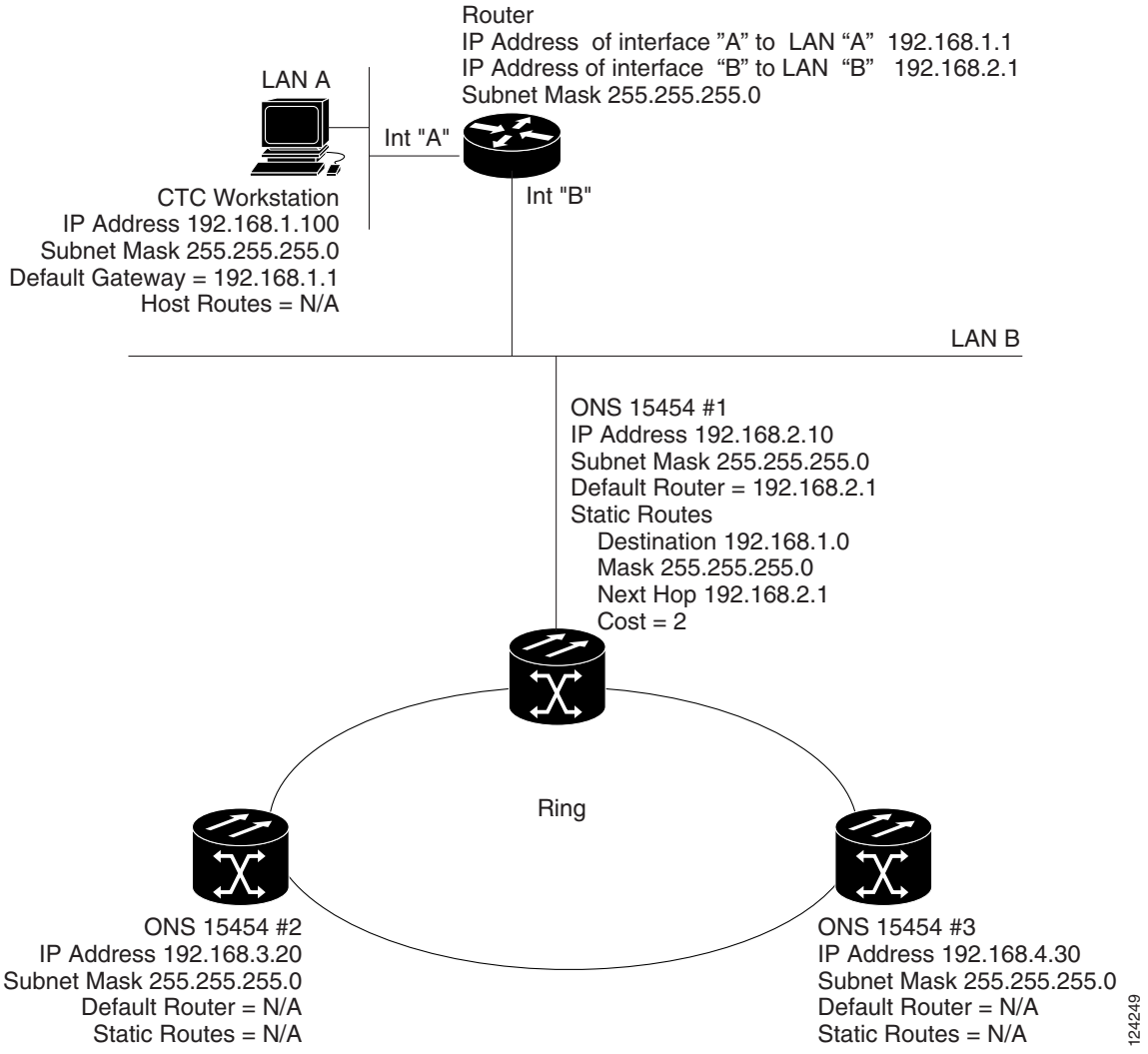

The destination and subnet mask entries control access to the ONS 15454s:

- If a single CTC computer is connected to a router, enter the complete CTC "host route" IP address as the destination with a subnet mask of 255.255.255.255.
- If CTC computers on a subnet are connected to a router, enter the destination subnet (in this example, 192.168.1.0) and a subnet mask of 255.255.255.0.
- If all CTC computers are connected to a router, enter a destination of 0.0.0.0 and a subnet mask of 0.0.0.0. Figure 19-7 shows an example.

The IP address of router interface B is entered as the next hop, and the cost (number of hops from source to destination) is 2.

Figure 19-7 Scenario 5: Static Route With Multiple LAN Destinations (ANSI and ETSI)

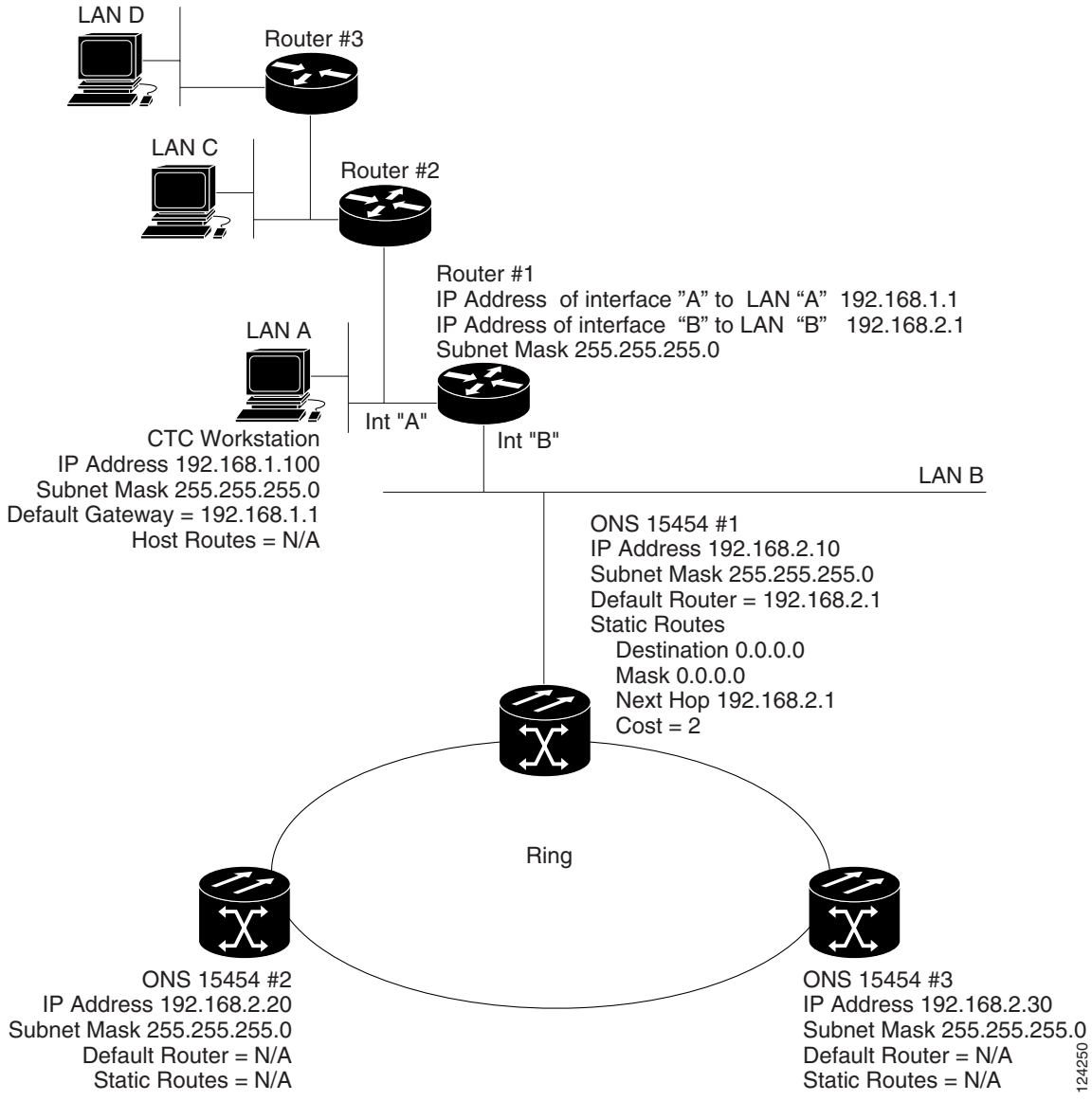

19.2.6 Scenario 6: Using OSPF

Open Shortest Path First (OSPF) is a link state Internet routing protocol. Link state protocols use a "hello protocol" to monitor their links with adjacent routers and to test the status of their links to their neighbors. Link state protocols advertise their directly connected networks and their active links. Each link state router captures the link state "advertisements" and puts them together to create a topology of the entire network or area. From this database, the router calculates a routing table by constructing a shortest path tree. Routes are recalculated when topology changes occur.

ONS 15454s use the OSPF protocol in internal ONS 15454 networks for node discovery, circuit routing, and node management. You can enable OSPF on the ONS 15454s so that the ONS 15454 topology is sent to OSPF routers on a LAN. Advertising the ONS 15454 network topology to LAN routers

eliminates the need to manually enter static routes for ONS 15454 subnetworks. Figure 19-8 shows a network enabled for OSPF. Figure 19-9 shows the same network without OSPF. Static routes must be manually added to the router for CTC computers on LAN A to communicate with Nodes 2 and 3 because these nodes reside on different subnets.

OSPF divides networks into smaller regions, called areas. An area is a collection of networked end systems, routers, and transmission facilities organized by traffic patterns. Each OSPF area has a unique ID number, known as the area ID. Every OSPF network has one backbone area called "area 0." All other OSPF areas must connect to area 0.

When you enable an ONS 15454 OSPF topology for advertising to an OSPF network, you must assign an OSPF area ID in decimal format to the ONS 15454 network. An area ID is a "dotted quad" value that appears similar to an IP address. Coordinate the area ID number assignment with your LAN administrator. All DCC-connected ONS 15454s should be assigned the same OSPF area ID.

Note It is recommended that the number of 15454s in an OSPF area be limited, because this allows faster loading into a CTC an is less likely to incur any problems.

Figure 19-8 Scenario 6: OSPF Enabled (ANSI and ETSI)

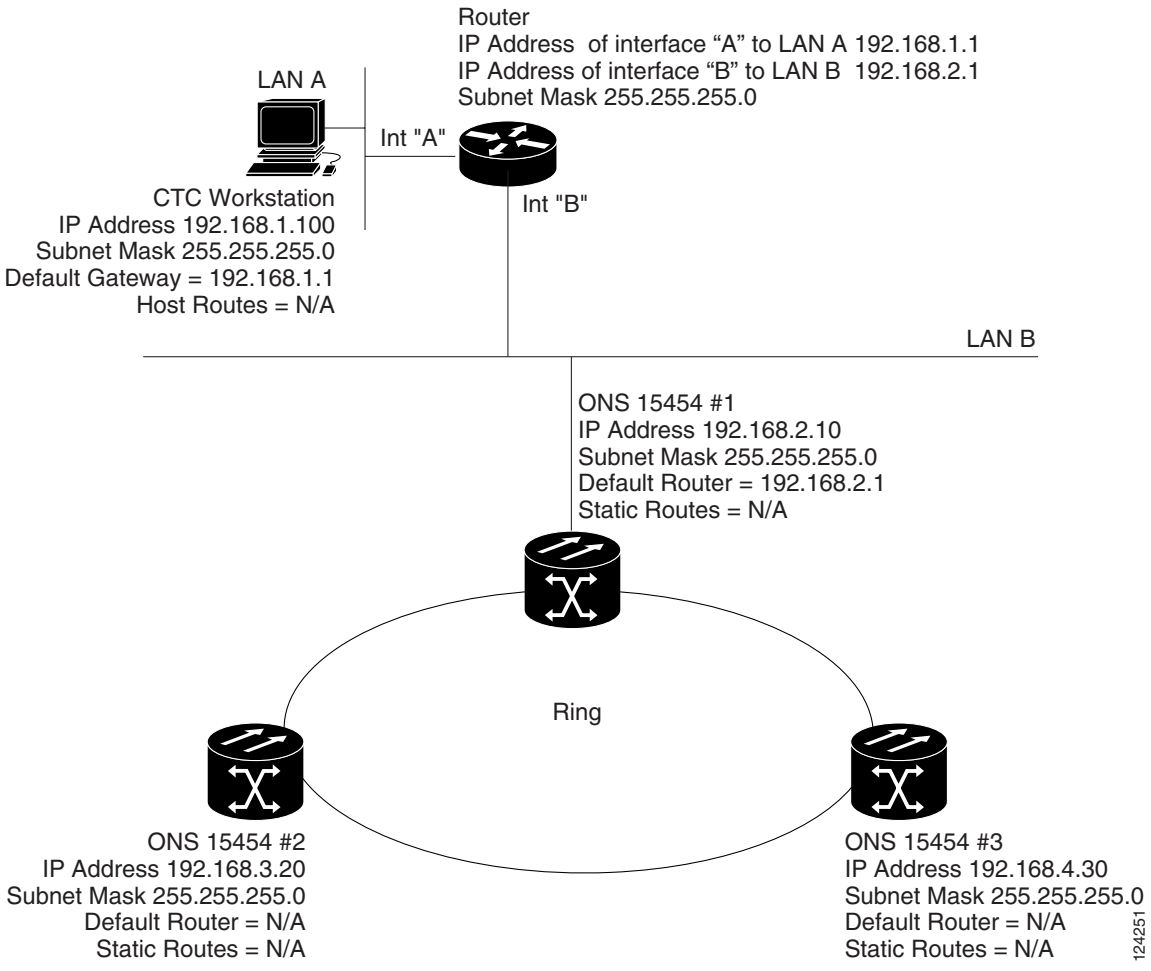

Figure 19-9 Scenario 6: OSPF Not Enabled (ANSI and ETSI)

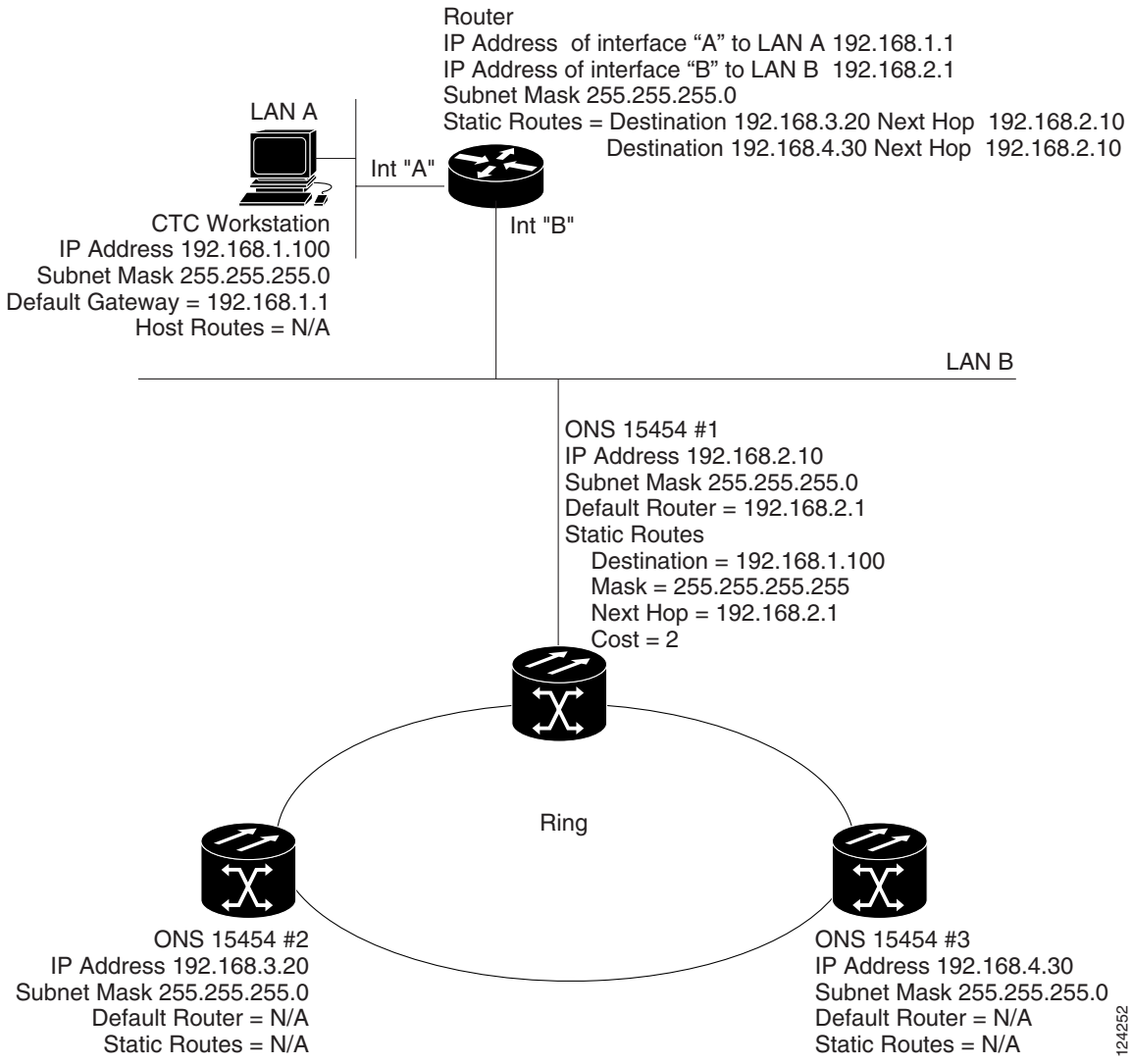

19.2.7 Scenario 7: Provisioning the ONS 15454 Proxy Server

The ONS 15454 proxy server is a set of functions that allows you to network ONS 15454s in environments where visibility and accessibility between ONS 15454s and CTC computers must be restricted. For example, you can set up a network so that field technicians and network operating center (NOC) personnel can both access the same ONS 15454s while preventing the field technicians from accessing the NOC LAN. To do this, one ONS 15454 is provisioned as a GNE and the other ONS 15454s are provisioned as end network elements (ENEs). The GNE ONS 15454 tunnels connections between CTC computers and ENE ONS 15454s, providing management capability while preventing access for non-ONS 15454 management purposes.

The ONS 15454 gateway setting performs the following tasks:

- Isolates DCC IP traffic from Ethernet (craft port) traffic and accepts packets based on filtering rules. The filtering rules (see Table 19-3 on page 19-16 and Table 19-4 on page 19-17) depend on whether the packet arrives at the ONS 15454 DCC or TCC2 Ethernet interface.
- Processes Simple Network Time Protocol (SNTP) and Network Time Protocol (NTP) requests. ONS 15454 ENEs can derive time-of-day from an SNTP/NTP LAN server through the GNE ONS 15454.
- Processes Simple Network Management Protocol version 1 (SNMPv1) traps. The GNE ONS 15454 receives SNMPv1 traps from the ENE ONS 15454s and forwards or relays the traps to SNMPv1 trap destinations or ONS 15454 SNMP relay nodes.

The ONS 15454 proxy server is provisioned using the Enable proxy server on port check box on the Provisioning > Network > General tab (see Figure 19-10 and Figure 19-11). If checked, the ONS 15454 serves as a proxy for connections between CTC clients and ONS 15454s that are DCC-connected to the proxy ONS 15454. The CTC client establishes connections to DCC-connected nodes through the proxy node. The CTC client can connect to nodes that it cannot directly reach from the host on which it runs. If not selected, the node does not proxy for any CTC clients, although any established proxy connections continue until the CTC client exits. In addition, you can set the proxy server as an ENE or a GNE:

- End Network Element (ENE)—If set as an ENE, the ONS 15454 neither installs nor advertises default or static routes that go through its Ethernet port. However, an ENE does install and advertise routes that go through the DCC. CTC computers can communicate with the ONS 15454 using the TCC2 craft port, but they cannot communicate directly with any other DCC-connected ONS 15454.

  In addition, firewall is enabled, which means that the node prevents IP traffic from being routed between the DCC and the LAN port. The ONS 15454 can communicate with machines connected to the LAN port or connected through the DCC. However, the DCC-connected machines cannot communicate with the LAN-connected machines, and the LAN-connected machines cannot communicate with the DCC-connected machines. A CTC client using the LAN to connect to the firewall-enabled node can use the proxy capability to manage the DCC-connected nodes that would otherwise be unreachable. A CTC client connected to a DCC-connected node can only manage other DCC-connected nodes and the firewall itself.
- Gateway Network Element (GNE)—If set as a GNE, the CTC computer is visible to other DCC-connected nodes and firewall is enabled.
- Proxy-only—If Proxy-only is selected, firewall is not enabled. CTC can communicate with any other DCC-connected ONS 15454s.

Note If you launch CTC against a node through a Network Address Translation (NAT) or Port Address Translation (PAT) router and that node does not have proxy enabled, your CTC session starts and initially appears to be fine. However CTC never receives alarm updates and disconnects and reconnects every two minutes. If the proxy is accidentally disabled, it is still possible to enable the proxy during a reconnect cycle and recover your ability to manage the node, even through a NAT/PAT firewall.

Figure 19-10 Proxy Server Gateway Settings (ANSI only)

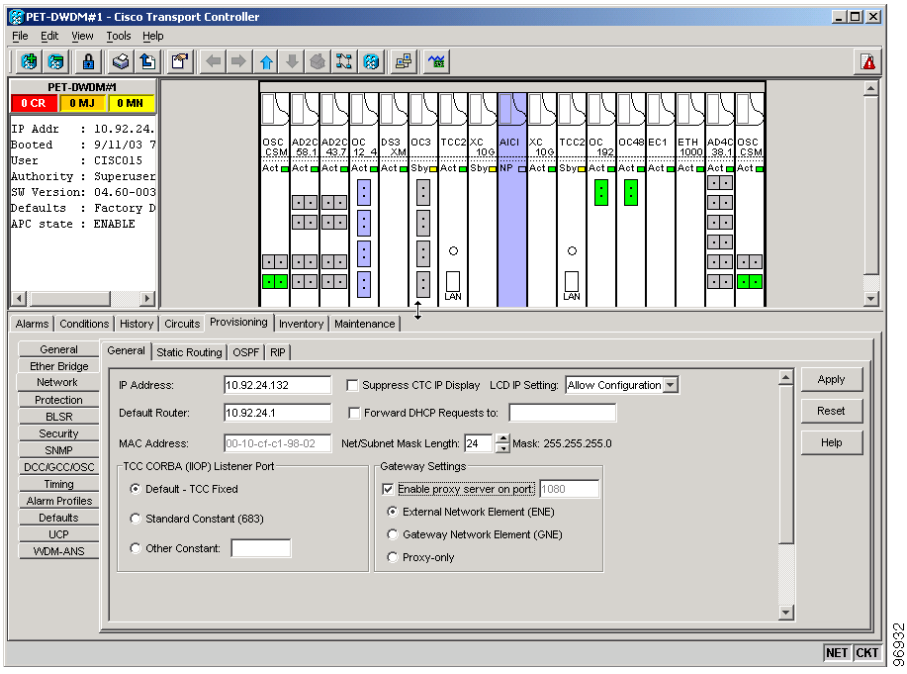

Figure 19-11 Proxy Server Gateway Settings (ETSI only)

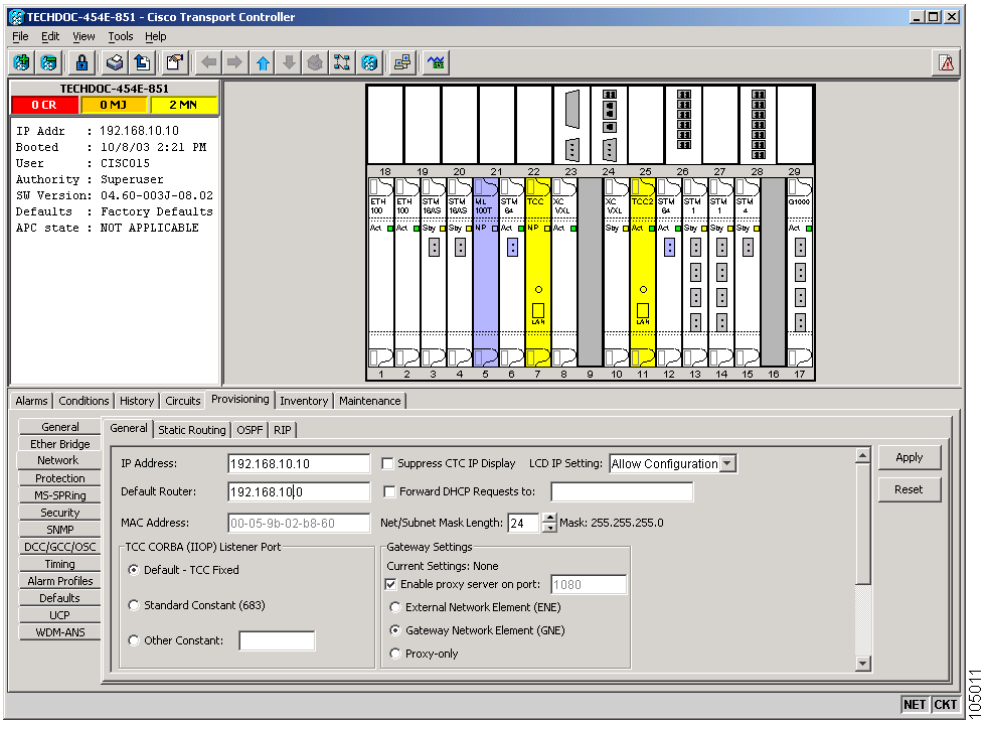

Figure 19-12 shows an ONS 15454 proxy server implementation. A GNE ONS 15454 is connected to a central office LAN and to ENE ONS 15454s. The central office LAN is connected to a NOC LAN, which has CTC computers. The NOC CTC computer and craft technicians must both be able to access the ONS 15454 ENEs. However, the craft technicians must be prevented from accessing or seeing the NOC or central office LANs.

In the example, the ONS 15454 GNE is assigned an IP address within the central office LAN and is physically connected to the LAN through its LAN port. ONS 15454 ENEs are assigned IP addresses that are outside the central office LAN and given private network IP addresses. If the ONS 15454 ENEs are collocated, the craft LAN ports could be connected to a hub. However, the hub should have no other network connections.

Figure 19-12 ONS 15454 Proxy Server with GNE and ENEs on the Same Subnet (ANSI and ETSI)

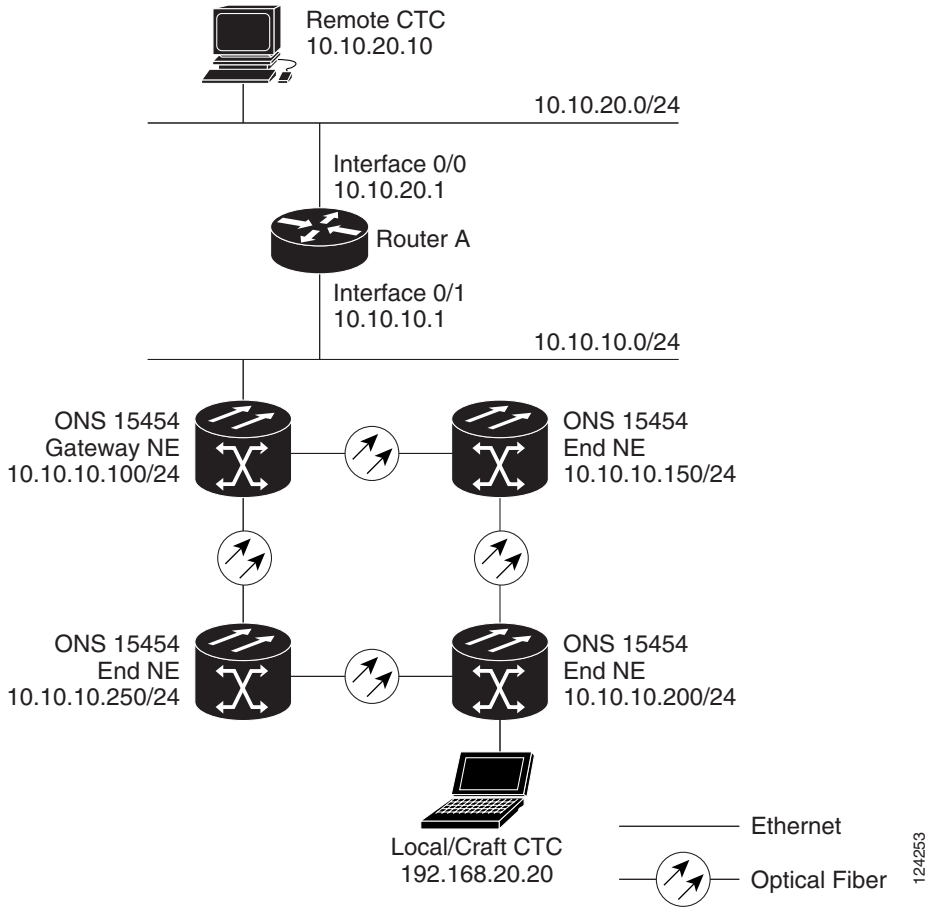

Table 19-2 shows recommended settings for ONS 15454 GNEs and ENEs in the configuration shown in Figure 19-12.

Table 19-2 ONS 15454 Gateway and End NE Settings

Setting	ONS 15454 Gateway NE	ONS 15454 End NE
OSPF	Off	Off

Table 19-2 ONS 15454 Gateway and End NE Settings

Setting	ONS 15454 Gateway NE	ONS 15454 End NE
SNTP server (if used)	SNTP server IP address	Set to ONS 15454 GNE IP address
SNMP (if used)	SNMPv1 trap destinations	Set SNMPv1 trap destinations to ONS 15454 GNE, port 391

Figure 19-13 shows the same proxy server implementation with ONS 15454 ENEs on different subnets. Figure 19-14 shows the implementation with ONS 15454 ENEs in multiple rings. In each example, ONS 15454 GNEs and ENEs are provisioned with the settings shown in Table 19-2.

Figure 19-13 Scenario 7: ONS 15454 Proxy Server with GNE and ENEs on Different Subnets (ANSI and ETSI)

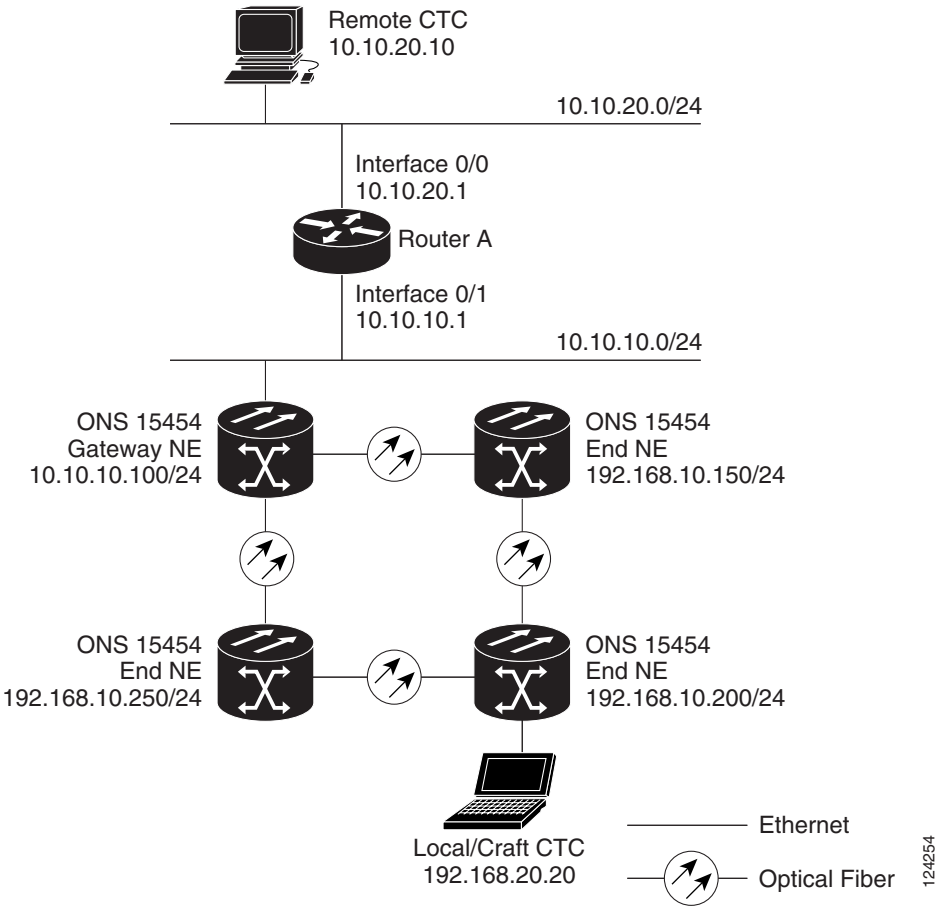

Figure 19-14 Scenario 7: ONS 15454 Proxy Server With ENEs on Multiple Rings (ANSI and ETSI)

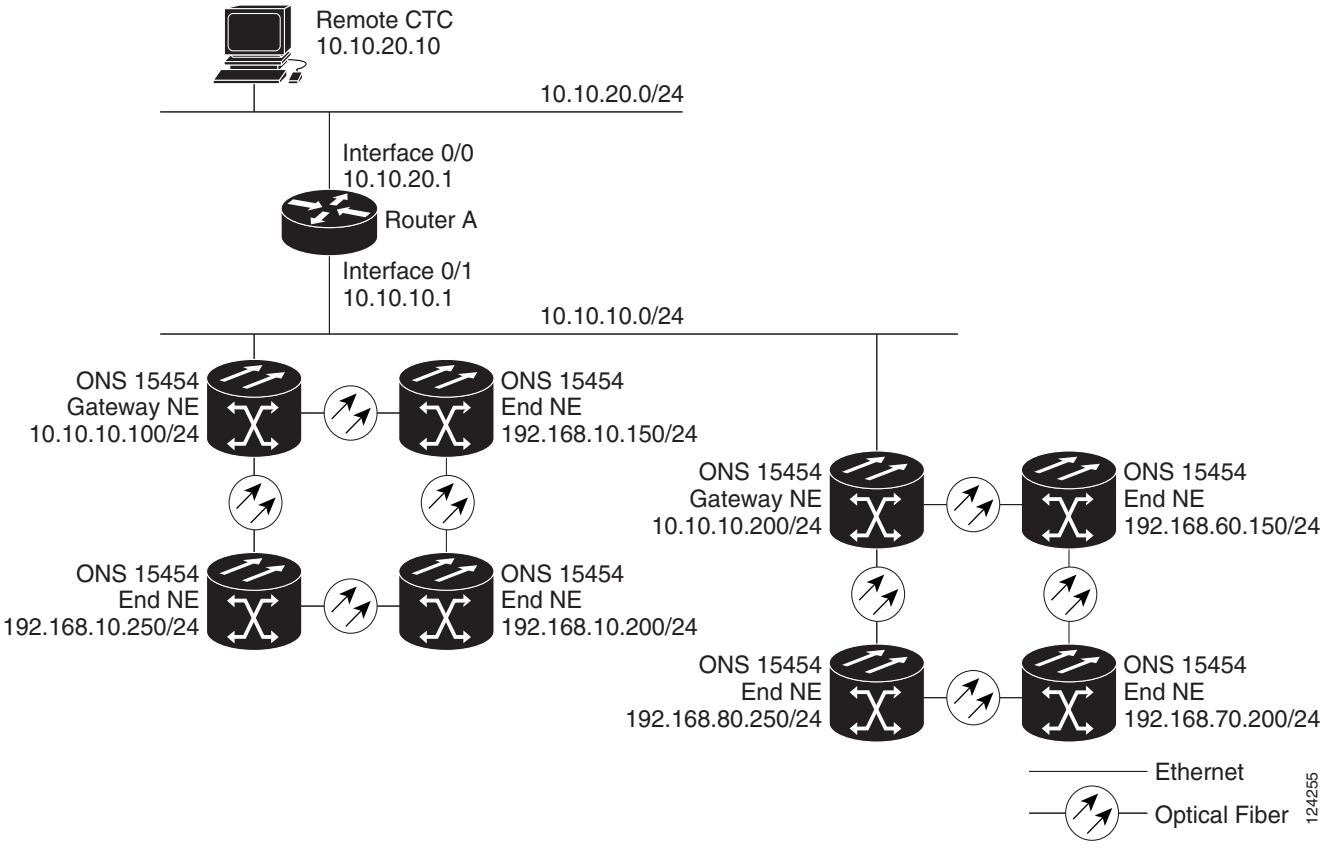

Table 19-3 shows the rules the ONS 15454 follows to filter packets for the firewall when nodes are configured as ENEs and GNEs. If the packet is addressed to the ONS 15454, additional rules, shown in Table 19-4, are applied. Rejected packets are silently discarded.

Table 19-3 Proxy Server Firewall Filtering Rules

Packets Arriving At:	Are Accepted if the Destination IP Address is:
TCC2 Ethernet interface	• The ONS 15454 itself • The ONS 15454's subnet broadcast address • Within the 224.0.0.0/8 network (reserved network used for standard multicast messages) • Subnet mask = 255.255.255.255
DCC interface	• The ONS 15454 itself • Any destination connected through another DCC interface • Within the 224.0.0.0/8 network

Table 19-4 Proxy Server Firewall Filtering Rules When Packet Addressed to ONS 15454

Packets Arriving At	Rejects
TCC2 Ethernet interface	• UDP[1] packets addressed to the SNMP trap relay port (391)
DCC interface	• TCP[2] packets addressed to the proxy server port (1080)

1. UDP = User Datagram Protocol
2. TCP = Transmission Control Protocol

If you implement the proxy server, note that all DCC-connected ONS 15454s on the same Ethernet segment must have the same gateway setting. Mixed values produce unpredictable results, and might leave some nodes unreachable through the shared Ethernet segment.

If nodes become unreachable, correct the setting by performing one of the following:

- Disconnect the craft computer from the unreachable ONS 15454. Connect to the ONS 15454 through another network ONS 15454 that has a DCC connection to the unreachable ONS 15454.
- Disconnect all DCCs to the node by disabling them on neighboring nodes. Connect a CTC computer directly to the ONS 15454 and change its provisioning.

19.2.8 Scenario 8: Dual GNEs on a Subnet

The ONS 15454 provides GNE load balancing, which allows CTC to reach ENEs over multiple GNEs without the ENEs being advertised over OSPF. This feature allows a network to quickly recover from the loss of GNE, even if the GNE is on a different subnet. If a GNE fails, all connections through that GNE fail. CTC disconnects from the failed GNE and from all ENEs for which the GNE was a proxy, and then reconnects through the remaining GNEs. GNE load balancing reduces the dependency on the launch GNE and DCC bandwidth, both of which enhance CTC performance. Figure 19-15 shows a network with dual GNEs on the same subnet. Figure 19-16 shows a network with dual GNEs on different subnets.

Note Dual GNEs do not need special provisioning

Figure 19-15 Scenario 8: Dual GNEs on the Same Subnet (ANSI and ETSI)

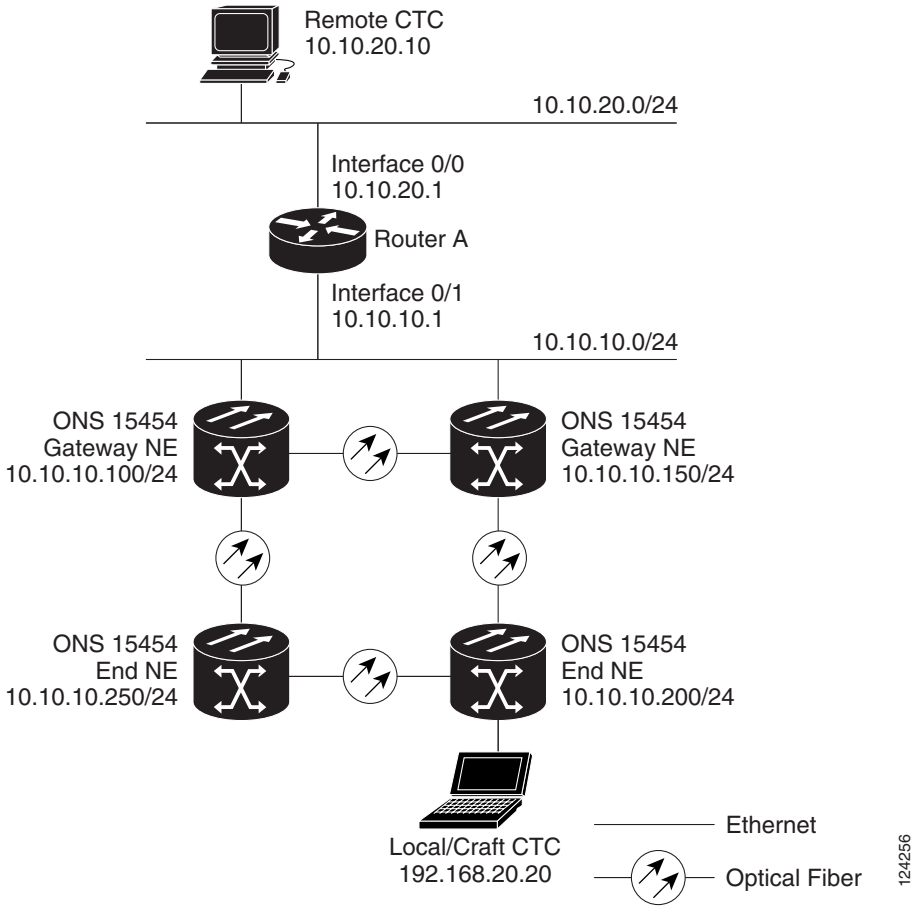

Figure 19-16 Scenario 8: Dual GNEs on Different Subnets (ANSI and ETSI)

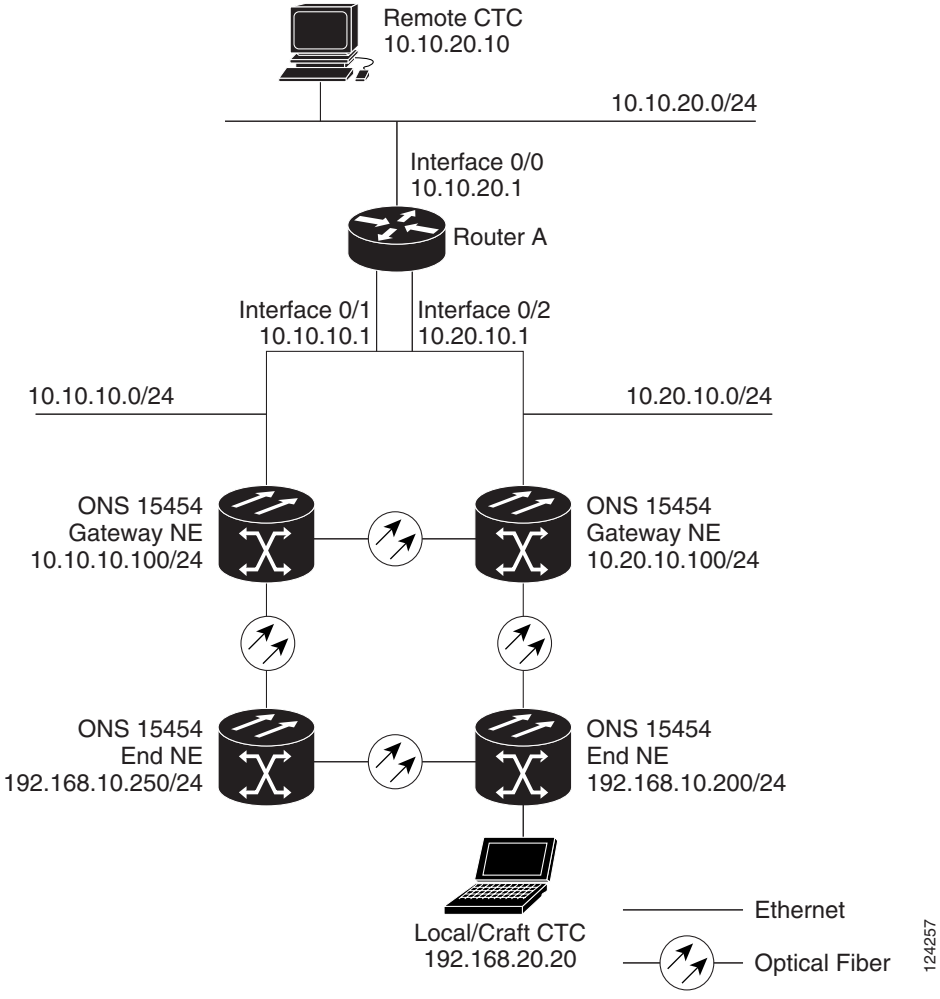

19.3 Provisionable Patchcords

A provisionable patchcord is a user-provisioned link that is advertised by OSPF throughout the network. Provisionable patchcords, also called virtual links, are needed in the following situations:

- An optical port is connected to a transponder or muxponder client port provisioned in transparent mode.
- An optical ITU port is connected to a DWDM optical channel card.
- Two transponder or muxponder trunk ports are connected to a DWDM optical channel card and the generic control channel (GCC) is carried transparently through the ring.
- Transponder or muxponder client and trunk ports are in a regenerator group, the cards are in transparent mode, and DCC/GCC termination is not available.

Provisionable patchcords are required on both ends of a physical link. The provisioning at each end includes a local patchcord ID, slot/port information, remote IP address, and remote patchcord ID. Patchcords appear as dashed lines in CTC network view.

Table 19-5 lists the supported card combinations for client and trunk ports in a provisionable patchcord.

Table 19-5 Cisco ONS 15454 Client/Trunk Card Combinations for Provisionable Patchcords

	Client Cards						
Trunk Cards	**MXP_2.5G_10G/ TXP_MR_10G**	**TXP_MR_2.5G/ TXPP_MR_2.5G**	**MXP_2.5G_10E/ TXP_MR_10E**	**32MUX-O 32DMX-O**	**32WSS/ 32DMX**	**AD-xC-xx.x**	**4MD-xx.x**
MXP_2.5G_10G/ TXP_MR_10G	—	—	—	Yes	Yes	Yes	Yes
TXP_MR_2.5G/ TXPP_MR_2.5G	—	—	—	Yes	Yes	Yes	Yes
MXP_2.5G_10E/ TXP_MR_10E	—	—	—	Yes	Yes	Yes	Yes
MXP_MR_2.5G/ MXPP_MR_2.5G	—	—	—	Yes	Yes	Yes	Yes
OC-192	Yes	—	Yes	—	—	—	—
OC-48	Yes	Yes	Yes	—	—	—	—
OC-192 ITU	—	—	—	Yes	Yes	Yes	Yes
OC-48 ITU	—	—	—	Yes	Yes	Yes	Yes

Note If the OCSM card is installed in Slot 8, provisionable patchcords from OC-N ports to the following cards are not supported on the same node: MXP_2.5G_10G, TXP_MR_10G, TXP_MR_2.5G, TXPP_MR_2.5G, MXP_2.5G_10E, TXP_MR_10E, 32MUX-O, 32DMX-O, 32WSS, or 32DMX.

Table 19-6 lists the supported card combinations for client-to-client ports in a patchcord.

Table 19-6 Cisco ONS 15454 Client/Client Card Combinations for Provisionable Patchcords

Client Cards	**MXP_2.5G_10G/ TXP_MR_10G**	**TXP_MR_2.5G/ TXPP_MR_2.5G**	**MXP_2.5G_10E/ TXP_MR_10E**
MXP_2.5G_10G/TXP_MR_10G	Yes	—	Yes
TXP_MR_2.5G/TXPP_MR_2.5G	—	Yes	—
MXP_2.5G_10E/TXP_MR_10E	Yes	—	Yes

Table 19-7 lists the supported card combinations for trunk-to-trunk ports in a patchcord.

Table 19-7 Cisco ONS 15454 Trunk/Trunk Card Combinations for Provisionable Patchcords

Trunk Cards	**MXP_2.5G_10G/ TXP_MR_10G**	**TXP_MR_2.5G/ TXPP_MR_2.5G**	**MXP_2.5G_10E/ TXP_MR_10E**
MXP_2.5G_10G/TXP_MR_10G	Yes	—	Yes
TXP_MR_2.5G/TXPP_MR_2.5G	—	Yes	—
MXP_2.5G_10E/TXP_MR_10E	Yes	—	Yes

Optical ports have the following requirements when used in a provisionable patchcord:

- An optical port connected to transponder/muxponder port or add/drop multiplexer or multiplexer/demultiplexer port requires section DCC/line DCC (SDCC/LDCC) termination.
- If the optical port is the protection port in a 1+1 group, the working port must have SDCC/LDCC termination provisioned.
- If the remote end of a patchcord is Y-cable protected or is an add/drop multiplexer or multiplexer/demultiplexer port, an optical port requires two patchcords.

Transponder and muxponder ports have the following requirements when used in a provisionable patchcord:

- Two patchcords are required when a transponder/muxponder port is connected to an add/drop multiplexer or multiplexer/demultiplexer port. CTC automatically prompts the user to set up the second patchcord.
- If a patchcord is on a client port in a regenerator group, the other end of the patchcord must be on the same node and on a port within the same regenerator group.
- A patchcord is allowed on a client port only if the card is in transparent mode.

DWDM cards support provisionable patchcords only on optical channel ports. Each DWDM optical channel port can have only one provisionable patchcord.

19.4 Routing Table

ONS 15454 routing information is displayed on the Maintenance > Routing Table tabs. The routing table provides the following information:

- Destination—Displays the IP address of the destination network or host.
- Mask—Displays the subnet mask used to reach the destination host or network.
- Gateway—Displays the IP address of the gateway used to reach the destination network or host.
- Usage—Shows the number of times the listed route has been used.
- Interface—Shows the ONS 15454 interface used to access the destination. Values are:
  - motfcc0—The ONS 15454 Ethernet interface, that is, the RJ-45 jack on the TCC2 and, for ANSI shelves, the LAN 1 pins on the backplane or, for ETSI shelves, the LAN connection on the MIC-C/T/P.
  - pdcc0—An SDCC interface, that is, an OC-N trunk card identified as the SDCC termination.
  - lo0—A loopback interface.

Table 19-8 shows sample routing entries for an ONS 15454.

Table 19-8 Sample Routing Table Entries

Entry	Destination	Mask	Gateway	Usage	Interface
1	0.0.0.0	0.0.0.0	172.20.214.1	265103	motfcc0
2	172.20.214.0	255.255.255.0	172.20.214.92	0	motfcc0
3	172.20.214.92	255.255.255.255	127.0.0.1	54	lo0
4	172.20.214.93	255.255.255.255	0.0.0.0	16853	pdcc0
5	172.20.214.94	255.255.255.255	172.20.214.93	16853	pdcc0

Entry 1 shows the following:

- Destination (0.0.0.0) is the default route entry. All undefined destination network or host entries on this routing table are mapped to the default route entry.
- Mask (0.0.0.0) is always 0 for the default route.
- Gateway (172.20.214.1) is the default gateway address. All outbound traffic that cannot be found in this routing table or is not on the node's local subnet is sent to this gateway.
- Interface (motfcc0) indicates that the ONS 15454 Ethernet interface is used to reach the gateway.

Entry 2 shows the following:

- Destination (172.20.214.0) is the destination network IP address.
- Mask (255.255.255.0) is a 24-bit mask, meaning all addresses within the 172.20.214.0 subnet can be a destination.
- Gateway (172.20.214.92) is the gateway address. All outbound traffic belonging to this network is sent to this gateway.
- Interface (motfcc0) indicates that the ONS 15454 Ethernet interface is used to reach the gateway.

Entry 3 shows the following:

- Destination (172.20.214.92) is the destination host IP address.
- Mask (255.255.255.255) is a 32 bit mask, meaning only the 172.20.214.92 address is a destination.
- Gateway (127.0.0.1) is a loopback address. The host directs network traffic to itself using this address.
- Interface (lo0) indicates that the local loopback interface is used to reach the gateway.

Entry 4 shows the following:

- Destination (172.20.214.93) is the destination host IP address.
- Mask (255.255.255.255) is a 32 bit mask, meaning only the 172.20.214.93 address is a destination.
- Gateway (0.0.0.0) means the destination host is directly attached to the node.
- Interface (pdcc0) indicates that a DCC interface is used to reach the destination host.

Entry 5 shows a DCC-connected node that is accessible through a node that is not directly connected:

- Destination (172.20.214.94) is the destination host IP address.
- Mask (255.255.255.255) is a 32-bit mask, meaning only the 172.20.214.94 address is a destination.
- Gateway (172.20.214.93) indicates that the destination host is accessed through a node with IP address 172.20.214.93.
- Interface (pdcc0) indicates that a DCC interface is used to reach the gateway.

19.5 External Firewalls

This section provides sample access control lists for external firewalls. Table 19-9 lists the ports that are used by the TCC2.

Table 19-9 Ports Used by the TCC2

Port	Function
0	Reserved
21	FTP control
23	Telnet
80	HTTP
111	rpc (not used; but port is in use)
513	rlogin (not used; but port is in use)
>1023	Default CTC listener ports
1080	Proxy server
2001–2017	Input/Output (I/O) card Telnet
2018	Reserved
2361	TL1
3082	TL1
3083	TL1
5001	BLSR server port (ANSI) MS-SPRing server port (ETSI)
5002	BLSR client port (ANSI) MS-SPRing client port (ANSI)
7200	SNMP input port
9100	EQM port
9101	EQM port 2
9401	TCC boot port
10240-12288	Proxy client
57790	Default TCC listener port

The following access control list (ACL) example shows a firewall configuration when the proxy server gateway setting is not enabled. In the example, the CTC workstation's address is 192.168.10.10. and the ONS 15454 address is 10.10.10.100. The firewall is attached to the GNE, so inbound is CTC to the GNE and outbound is from the GNE to CTC. The CTC Common Object Request Broker Architecture (CORBA) Standard constant is 683 and the TCC CORBA Default is TCC Fixed (57790).

```
access-list 100 remark *** Inbound ACL, CTC -> NE ***
access-list 100 remark
access-list 100 permit tcp host 192.168.10.10 host 10.10.10.100 eq www
access-list 100 remark *** allows initial contact with ONS 15454 using http (port 80) ***
access-list 100 remark
access-list 100 permit tcp host 192.168.10.10 host 10.10.10.100 eq 57790
access-list 100 remark *** allows CTC communication with ONS 15454 GNE (port 57790) ***
access-list 100 remark
access-list 100 permit tcp host 192.168.10.10 host 10.10.10.100 established
access-list 100 remark *** allows ACKs back from CTC to ONS 15454 GNE ***

access-list 101 remark *** Outbound ACL, NE -> CTC ***
access-list 101 remark
access-list 101 permit tcp host 10.10.10.100 host 192.168.10.10 eq 683
```

```
access-list 101 remark *** allows alarms etc., from the 15454 (random port) to the CTC
workstation (port 683) ***
access-list 100 remark
access-list 101 permit tcp host 10.10.10.100 host 192.168.10.10 established
access-list 101 remark *** allows ACKs from the 15454 GNE to CTC ***
```

The following ACL example shows a firewall configuration when the proxy server gateway setting is enabled. As with the first example, the CTC workstation address is 192.168.10.10 and the ONS 15454 address is 10.10.10.100. The firewall is attached to the GNE, so inbound is CTC to the GNE and outbound is from the GNE to CTC. CTC CORBA Standard constant is 683 and TCC CORBA Default is TCC Fixed (57790).

```
access-list 100 remark *** Inbound ACL, CTC -> NE ***
access-list 100 remark
access-list 100 permit tcp host 192.168.10.10 host 10.10.10.100 eq www
access-list 100 remark *** allows initial contact with the 15454 using http (port 80) ***
access-list 100 remark
access-list 100 permit tcp host 192.168.10.10 host 10.10.10.100 eq 1080
access-list 100 remark *** allows CTC communication with the 15454 GNE (port 1080) ***
access-list 100 remark

access-list 101 remark *** Outbound ACL, NE -> CTC ***
access-list 101 remark
access-list 101 permit tcp host 10.10.10.100 host 192.168.10.10 established
access-list 101 remark *** allows ACKs from the 15454 GNE to CTC ***
```

19.6 Open GNE

The ONS 15454 can communicate with non-ONS nodes that do not support Point-to-Point Protocol (PPP) vendor extensions or OSPF type 10 opaque link-state advertisements (LSA), both of which are necessary for automatic node and link discovery. An open GNE configuration allows a GCC-based network to function as an IP network for non-ONS nodes.

To configure an open GNE network, you can provision GCC terminations to include a far-end, non-ONS node using either the default IP address of 0.0.0.0 or a specified IP address. You provision a far-end, non-ONS node by checking the “Far End is Foreign” check box during GCC creation. The default 0.0.0.0 IP address allows the far-end, non-ONS node to identify itself with any IP address; if you set an IP address other than 0.0.0.0, a link is established only if the far-end node identifies itself with that IP address, providing an extra level of security.

By default, the proxy server only allows connections to discovered ONS peers and the firewall blocks all IP traffic between the GCC network and LAN. You can, however, provision proxy tunnels to allow up to 12 additional destinations for SOCKS version 5 connections to non-ONS nodes. You can also provision firewall tunnels to allow up to 12 additional destinations for direct IP connectivity between the GCC network and LAN. Proxy and firewall tunnels include both a source and destination subnet. The connection must originate within the source subnet and terminate within the destination subnet before either the SOCKS connection or IP packet flow is allowed. A proxy connection is allowed if the CTC client is in a source subnet and the requested destination is in the destination subnet. Firewall tunnels allow IP traffic to route between the node Ethernet and pdcc interfaces. A inbound Ethernet packet is allowed through the firewall if its source address matches a tunnel source and its destination matches a tunnel destination. An inbound pdcc packet is allowed through the firewall if its source address matches a tunnel destination and its destination address matches a tunnel source. Tunnels only affect TCP and UDP packets.

To set up proxy and firewall subnets in CTC, see the “DLP-G97 Provision a Proxy Tunnel” task on page 5-10 and the “DLP-G98 Provision a Firewall Tunnel” task on page 5-11. The availability of proxy and/or firewall tunnels depends on the network access settings of the node:

- If the node is configured with the proxy server enabled in GNE or ENE mode, you must set up a proxy tunnel and/or a firewall tunnel.
- If the node is configured with the proxy server enabled in proxy-only mode, you can set up proxy tunnels. Firewall tunnels are not allowed.
- If the node is configured with the proxy server disabled, neither proxy tunnels or firewall tunnels are allowed.

Figure 19-17 shows an example of a foreign node connected to the GCC network. Proxy and firewall tunnels are useful in this example because the GNE would otherwise block IP access between the PC and the foreign node.

Figure 19-17 Proxy and Firewall Tunnels for Foreign Terminations

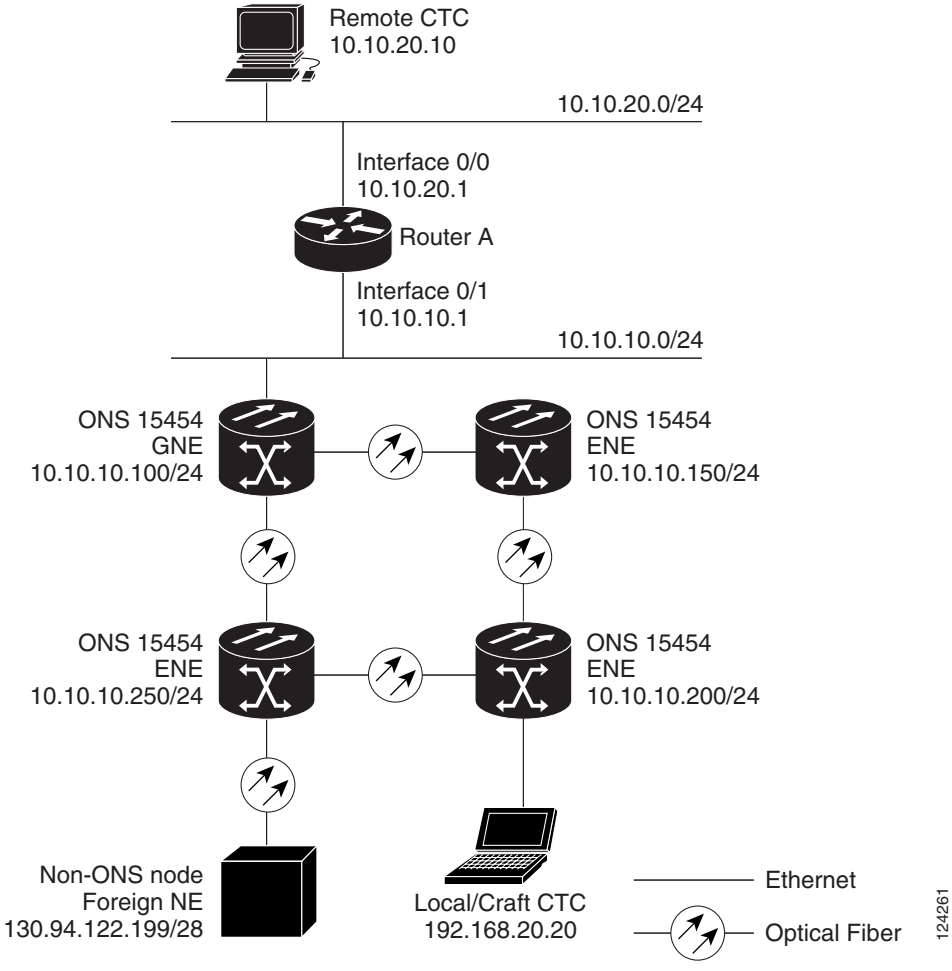

Figure 19-18 shows a remote node connected to an ENE Ethernet port. Proxy and firewall tunnels are useful in this example because the GNE would otherwise block IP access between the PC and foreign node. This configuration also requires a firewall tunnel on the ENE.

Figure 19-18 Foreign Node Connection to an ENE Ethernet Port

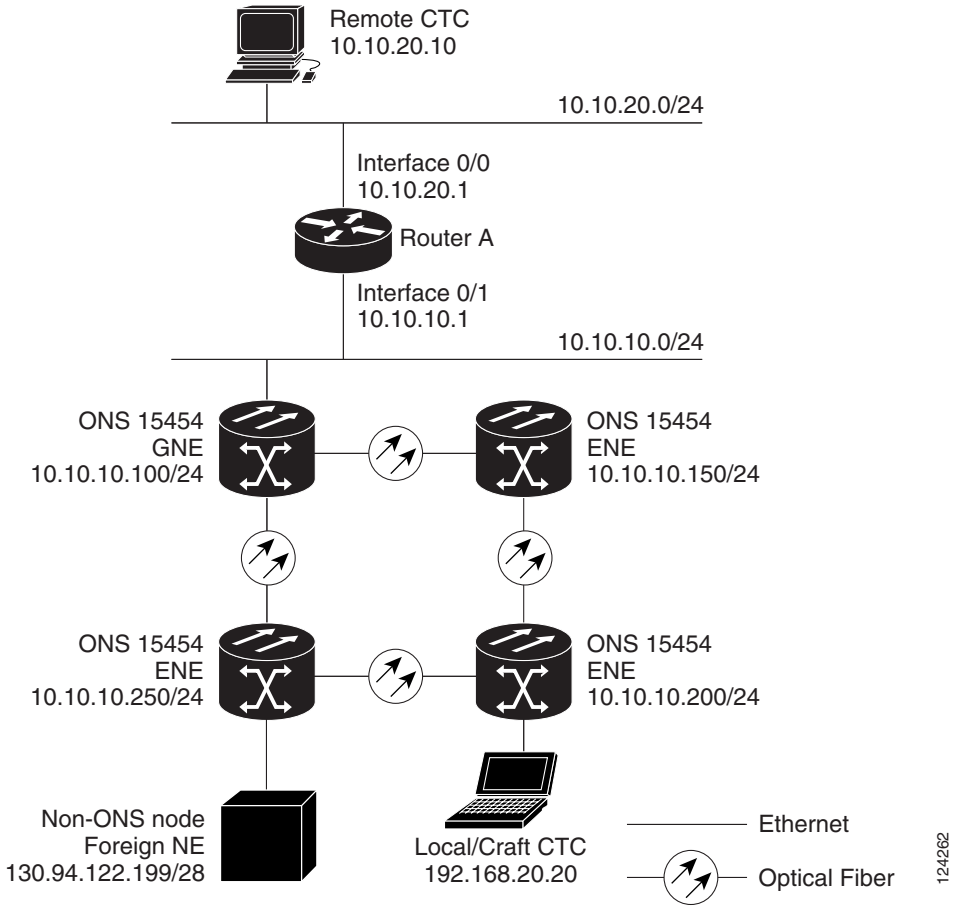

Alarm Monitoring and Management

This chapter describes Cisco Transport Controller (CTC) alarm management. To troubleshoot specific alarms, refer to the *Cisco ONS 15454 SONET and DWDM Troubleshooting Guide*.

Note Unless otherwise specified, "ONS 15454" refers to both ANSI and ETSI shelf assemblies.

Chapter topics include:

- 20.1 Overview, page 20-1
- 20.2 Alarm Counts on the LCD for a Node, Slot, or Port, page 20-2
- 20.3 Alarm Display, page 20-2
- 20.4 Alarm Severities, page 20-8
- 20.5 Alarm Profiles, page 20-9
- 20.6 Alarm Suppression, page 20-13
- 20.7 External Alarms and Controls, page 20-13
- 20.8 Audit Trail, page 20-15

20.1 Overview

CTC detects and reports alarms generated by the Cisco ONS 15454 and the larger network. You can use CTC to monitor and manage alarms at the card, node, or network level. Default alarm severities conform to the Telcordia GR-253 standard, but you can set alarm severities in customized alarm profiles or suppress CTC alarm reporting. For a detailed description of the standard Telcordia categories employed by Optical Networking System (ONS) nodes, refer to the *Cisco ONS 15454 SONET and DWDM Troubleshooting Guide.*

Note ONS 15454 alarms can also be monitored and managed through Transaction Language One (TL1) or a network management system (NMS).

20.2 Alarm Counts on the LCD for a Node, Slot, or Port

You can view node, slot, or port-level alarm counts and summaries using the buttons on the ONS 15454 LCD panel. The Slot and Port buttons toggle between display types; the Slot button toggles between node display and slot display, and the Port button toggles between slot and port views. Pressing the Status button after you choose the display mode changes the display from alarm count to alarm summary.

The ONS 15454 has a one-button update for some commonly viewed alarm counts. If you press the Slot button once and then wait eight seconds, the display automatically changes from a slot alarm count to a slot alarm summary. If you press the Port button to toggle to port-level display, you can use the Port button to toggle to a specific slot and to view each port's port-level alarm count. Figure 20-1 shows the LCD panel layout.

Figure 20-1 Shelf LCD Panel

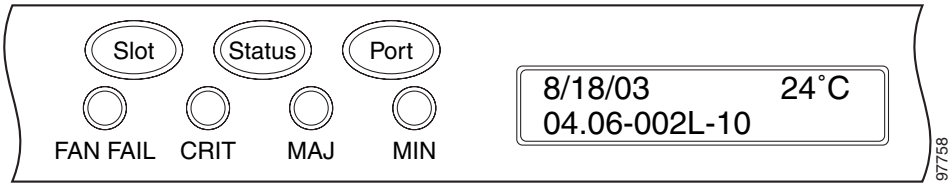

20.3 Alarm Display

In the card-, node-, or network-level CTC view, click the Alarms tab to display the alarms for that card, node, or network. The Alarms window shows alarms in conformance with Telcordia GR-253. This means that if a network problem causes two alarms, such as loss of frame (LOF) and loss of signal (LOS), CTC only shows the LOS alarm in this window because it supersedes the LOF and replaces it.

The Path Width column in the Alarms and Conditions tabs expands upon alarmed object information contained in the access identifier (AID) string (such as "STS-4-1-3") by giving the number of STSs contained in the alarmed path. For example, the Path Width tells you whether a critical alarm applies to an STS1 or an STS48c. The column reports the width as a 1, 3, 6, 12, 48, etc. as appropriate, understood to be "STS-*n*."

Table 7-1 on page 7-7 lists the column headings and the information recorded in each column and Table 7-2 on page 7-8 lists the color codes for alarm and condition severities.

20.3.1 Viewing Alarms With Each Node's Time Zone

By default, alarms and conditions are displayed with the time stamp of the CTC workstation where you are viewing them. But you can set the node to report alarms (and conditions) using the time zone where the node is located by clicking Edit > Preferences, and clicking the Display Events Using Each Node's Timezone check box. See the "DLP-G118 Display Alarms and Conditions Using Time Zone" task on page 7-11.

20.3.2 Controlling Alarm Display

You can control the display of the alarms shown on the Alarms window. Table 20-1 shows the actions you can perform in the Alarms window.

Table 20-1 Alarm Display

Button/Check Box/Tool	Action
Filter button	Allows you to change the display on the Alarms window to show only alarms that meet a certain severity level, occur in a specified time frame, and/or reflect specific conditions. For example, you can set the filter so that only critical alarms display in the window. If you enable the Filter feature by clicking the Filter button in one CTC view, such as node view, it is enabled in the others as well (card view and network view).
Synchronize button	Updates the alarm display. Although CTC displays alarms in real time, the Synchronize button allows you to verify the alarm display. This is particularly useful during provisioning or troubleshooting.
Delete Cleared Alarms button	Deletes alarms that have been cleared.
AutoDelete Cleared Alarms check box	If checked, CTC automatically deletes cleared alarms.
Filter tool	Enables or disables alarm filtering in the card, node, or network view. When enabled or disabled, this state applies to other views for that node and for all other nodes in the network. For example, if the Filter tool is enabled in the node (default login) view Alarms window, the network view Alarms window and card view Alarms window also show the tool enabled. All other nodes in the network also show the tool enabled.

20.3.3 Filtering Alarms

The alarm display can be filtered to prevent the display of alarms with certain severities or alarms that occurred between certain dates. You can set the filtering parameters by clicking the Filter button at the bottom-left of the Alarms window. You can turn the filter on or off by clicking the Filter tool at the bottom-right of the window. CTC retains your filter activation setting. For example, if you turn the filter on and then log out, CTC keeps the filter active the next time you log in.

See the "NTP-G69 Enable, Modify, or Disable Alarm Severity Filtering" procedure on page 7-29.

20.3.4 Viewing Alarm-Affected Circuits

A user can view which ONS 15454 circuits are affected by a specific alarm by positioning the cursor over the alarm in the Alarm window and right-clicking. A shortcut menu appears (Figure 20-2).

See the "NTP-G66 View Alarm-Affected Circuits" procedure on page 7-14.

Figure 20-2 Select Affected Circuits Option

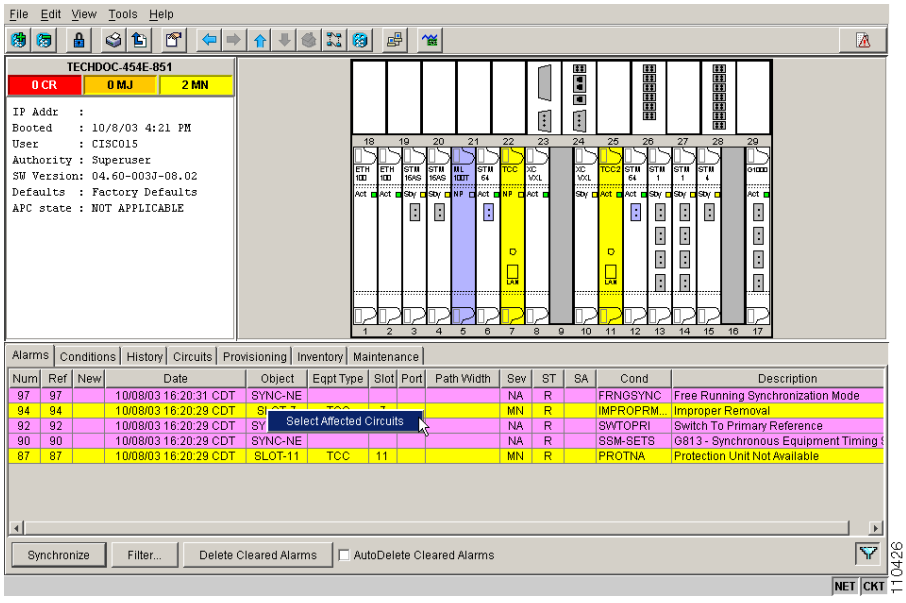

When the user selects the Select Affected Circuits option, the Circuits window appears to show the circuits that are affected by the alarm (Figure 20-3).

Figure 20-3 Viewing Alarm-Affected Circuits

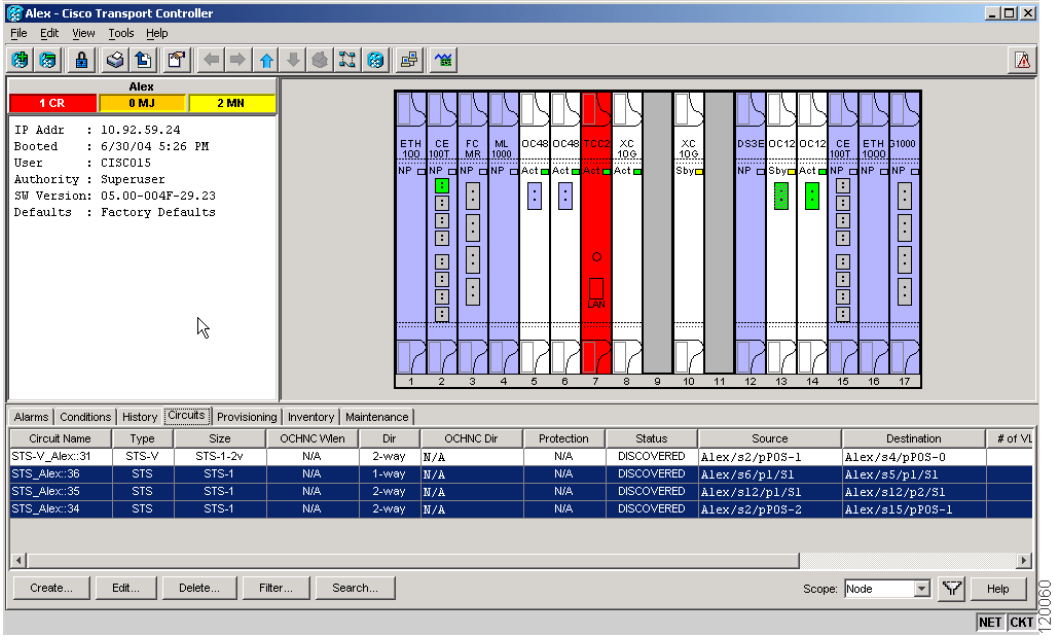

20.3.5 Conditions Tab

The Conditions window displays retrieved fault conditions. A condition is a fault or status detected by ONS 15454 hardware or software. When a condition occurs and continues for a minimum period, CTC raises a condition, which is a flag showing that this particular condition currently exists on the ONS 15454. See the "DLP-G120 View Conditions" task on page 7-12.

The Conditions window shows all conditions that occur, including those that are superseded. For instance, if a network problem causes two alarms, such as LOF and LOS, CTC shows both the LOF and LOS conditions in this window (even though LOS supersedes LOF). Having all conditions visible can be helpful when troubleshooting the ONS 15454. If you want to retrieve conditions that obey a root-cause hierarchy (that is, LOS supersedes and replaces LOF), you can exclude the same root causes by checking a check box in the window.

Fault conditions include reported alarms and Not Reported or Not Alarmed conditions. Refer to the trouble notifications information in the *Cisco ONS 15454 SONET and DWDM Troubleshooting Guide* for more information about alarm and condition classifications.

20.3.6 Controlling the Conditions Display

You can control the display of the conditions on the Conditions window. Table 20-2 shows the actions you can perform in the window.

Table 20-2 Conditions Display

Button	Action
Retrieve	Retrieves the current set of all existing fault conditions, as maintained by the alarm manager, from the ONS 15454.
Filter	Allows you to change the Conditions window display to only show the conditions that meet a certain severity level or occur in a specified time frame. For example, you can set the filter so that only critical conditions display on the window. There is a Filter button on the lower-right of the window that allows you to enable or disable the filter feature.
Exclude Same Root Cause	Retrieves conditions that obey a root-cause hierarchy (LOS supersedes and replaces LOF).

20.3.6.1 Retrieving and Displaying Conditions

The current set of all existing conditions maintained by the alarm manager can be seen when you click the Retrieve button. The set of conditions retrieved is relative to the view. For example, if you click the button while displaying the node view, node-specific conditions are displayed. If you click the button while displaying the network view, all conditions for the network (including ONS 15454 nodes and other connected nodes) are displayed, and the card view shows only card-specific conditions.

You can also set a node to display conditions using the time zone where the node is located, rather than the time zone of the PC where they are being viewed. See the "20.3.1 Viewing Alarms With Each Node's Time Zone" section on page 20-2 for more information.

20.3.6.2 Conditions Column Descriptions

Table 20-3 lists the Conditions window column headings and the information recorded in each column.

Table 20-3 Conditions Column Description

Column	Information Recorded
Date	Date and time of the condition.
Object	TL1 AID for the condition object. For an STSmon or VTmon, the object.
Eqpt Type	Card type in this slot.
Slot	Slot where the condition occurred (appears only in network and node view).
Port	Port where the condition occurred. For STSTerm and VTTerm, the port refers to the upstream card it is partnered with.
Path Width	Width of the data path
Sev[1]	Severity level: CR (Critical), MJ (Major), MN (Minor), NA (Not Alarmed), NR (Not Reported).
SA[1]	Indicates a service-affecting alarm (when checked).
Cond	The error message/alarm name; these names are alphabetically defined in the *Cisco ONS 15454 SONET and DWDM Troubleshooting Guide.*
Description	Description of the condition.

1. All alarms, their severities, and service-affecting statuses are also displayed in the Condition tab unless you choose to filter the alarm from the display using the Filter button.

20.3.6.3 Filtering Conditions

The condition display can be filtered to prevent display of conditions (including alarms) with certain severities or that occurred between certain dates. You can set the filtering parameters by clicking the Filter button at the bottom-left of the Conditions window. You can turn the filter on or off by clicking the Filter tool at the bottom-right of the window. CTC retains your filter activation setting. For example, if you turn the filter on and then log out, CTC keeps the filter active the next time your user ID is activated.

20.3.7 Viewing History

The History window displays historic alarm or condition data for the node or for your login session. You can chose to display only alarm history, only events, or both by checking check boxes in the History > Node window. You can view network-level alarm and condition history, such as for circuits, at that level. At the node level, you can see all port (facility), card, STS, and system-level history entries. For example, protection-switching events or performance-monitoring threshold crossings appear here. If you double-click a card, you can view all port, card, and STS alarm or condition history that directly affects the card. See the "DLP-G116 View Alarm or Event History" task on page 7-8.

The ONS 15454 can store up to 640 critical alarm messages, 640 major alarm messages, 640 minor alarm messages, and 640 condition messages. When any of these limits is reached, the ONS 15454 discards the oldest events in that category.

Note In the Preference dialog General tab, the Maximum History Entries value only applies to the Session window.

Different views of CTC display different kinds of history:

- The History > Session window is shown in network view, node view, and card view. It shows alarms and conditions that occurred during the current user CTC session.
- The History > Node window is only shown in node view. It shows the alarms and conditions that occurred on the node since CTC software was operated on the node.
- The History > Card window is only shown in card view. It shows the alarms and conditions that occurred on the card since CTC software was installed on the node.

Tip Double-click an alarm in the History window to display the corresponding view. For example, double-clicking a card alarm takes you to card view. In network view, double-clicking a node alarm takes you to node view.

If you check the History window Alarms check box, you display the node history of alarms. If you check the Events check box, you display the node history of Not Alarmed and transient events (conditions). If you check both check boxes, you retrieve node history for both.

20.3.7.1 History Column Descriptions

Table 20-4 lists the History window column headings and the information recorded in each column.

Table 20-4 History Column Description

Column	Information Recorded
Num	Num (number) is the quantity of alarm messages received, and is incremented automatically as alarms occur to display the current total of received error messages. (The column is hidden by default; to view it, right-click a column and choose Show Column.)
Ref	Ref (reference) is a unique identification number assigned to each alarm to reference a specific alarm message that is displayed. (The column is hidden by default; to view it, right-click a column and choose Show Column.)
Date	Date and time of the condition.
Object	TL1 AID for the condition object. For an STSmon or VTmon, this is the monitored STS or VT object.
Slot	Slot where the condition occurred (only displays in network view and node view).
Port	Port where the condition occurred. For STSTerm and VTTerm, the port refers to the upstream card it is partnered with.
Path Width	Width of the data path.
Sev	Severity level: Critical (CR), Major (MJ), Minor (MN), Not Alarmed (NA), Not Reported (NR).
ST	Status: raised (R), cleared (C), or transient (T).
SA	Indicates a service-affecting alarm (when checked).

Table 20-4 History Column Description (continued)

Column	Information Recorded
Cond	Condition name.
Description	Description of the condition.
Eqpt Type	Card type in this slot.

20.3.7.2 Retrieving and Displaying Alarm and Condition History

You can retrieve and view the history of alarms and conditions, as well as transients (passing notifications of processes as they occur) in the CTC history window. The information in this window is specific to the view where it is shown (that is, network history in the network view, node history in the node view, and card history in the card view).

The node and card history views are each divided into two tabs. In node view, when you click the Retrieve button, you can see the history of alarms, conditions, and transients that have occurred on the node in the History > Node window, and the history of alarms, conditions, and transients that have occurred on the node during your login session in the History > Session window. In the card-view history window, after you retrieve the card history, you can see the history of alarms, conditions, and transients on the card in the History > Card window, or a history of alarms, conditions, and transients that have occurred during your login session in the History > Session window.

You can also filter the severities and occurrence period in these history windows.

20.4 Alarm Severities

ONS 15454 alarm severities follow the Telcordia GR-253 standard, so a condition might be Alarmed (at a severity of Critical [CR], Major [MJ], or Minor [MN]), Not Alarmed (NA), or Not Reported (NR). These severities are reported in the CTC software Alarms, Conditions, and History windows at all levels: network, shelf, and card.

ONS equipment provides a standard profile named Default listing all alarms and conditions with severity settings based on Telcordia GR-253 and other standards, but users can create their own profiles with different settings for some or all conditions and apply these wherever desired. (See the "20.5 Alarm Profiles" section on page 20-9.) For example, in a custom alarm profile, the default severity of a carrier loss (CARLOSS) alarm on an Ethernet port could be changed from major to critical. The profile allows setting to Not Reported or Not Alarmed, as well as the three alarmed severities.

Critical and Major severities are only used for service-affecting alarms. If a condition is set as Critical or Major by profile, it will raise as Minor alarm in the following situations:

- In a protection group, if the alarm is on a standby entity (the side not carrying traffic)
- If the alarmed entity has no traffic provisioned on it, so no service is lost

Because of this possibility of being raised at two different levels, the alarm profile pane shows Critical as CR / MN and Major as MJ / MN.

20.5 Alarm Profiles

The alarm profiles feature allows you to change default alarm severities by creating unique alarm profiles for individual ONS 15454 ports, cards, or nodes. A created alarm profile can be applied to any node on the network. Alarm profiles can be saved to a file and imported elsewhere in the network, but the profile must be stored locally on a node before it can be applied to the node, its cards, or its cards' ports.

CTC can store up to ten active alarm profiles at any time to apply to the node. Custom profiles can take eight of these active profile positions. Two other profiles, Default profile and Inherited profile, are reserved by the NE, and cannot be edited.The reserved Default profile contains Telcordia GR-253 severities. The reserved Inherited profile allows port alarm severities to be governed by the card-level severities, or card alarm severities to be determined by the node-level severities.

If one or more alarm profiles have been stored as files from elsewhere in the network onto the local PC or server hard drive where CTC resides, you can utilize as many profiles as you can physically store by deleting and replacing them locally in CTC so that only eight are active at any given time.

See the "NTP-G68 Create, Download, and Assign Alarm Severity Profiles" procedure on page 7-17.

20.5.1 Creating and Modifying Alarm Profiles

Alarm profiles are created in the network view using the Provisioning > Alarm Profiles tabs. Figure 20-4 shows the default list of alarm severities. A default alarm severity following Telcordia GR-253 standards is preprovisioned for every alarm. After loading the default profile or another profile on the node, you can clone a profile to create custom profiles. After the new profile is created, the Alarm Profiles window shows the original profile—frequently Default—and the new profile.

Figure 20-4 Network View Alarm Profiles Window

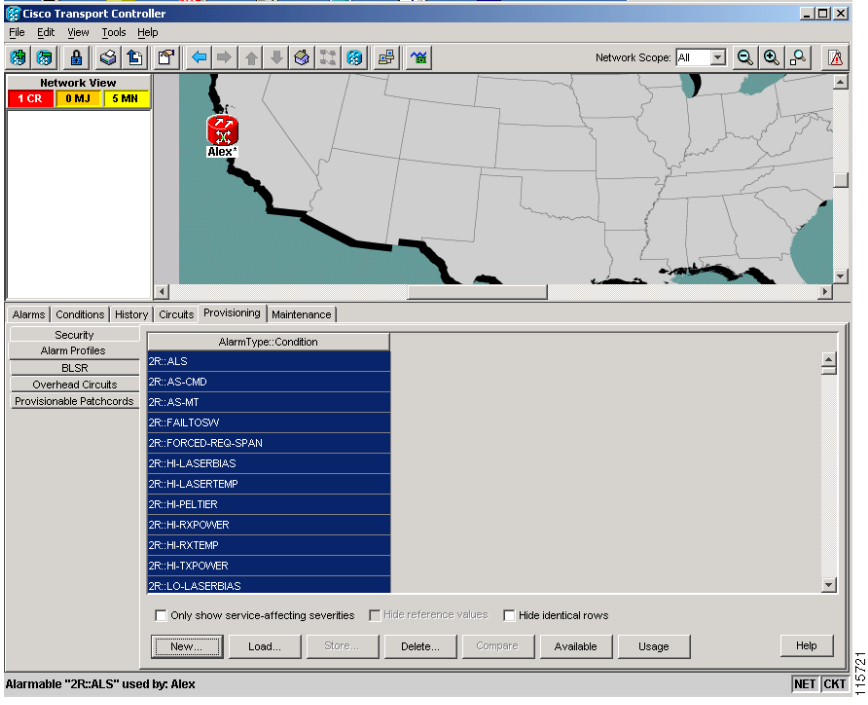

Note The alarm profile list contains a master list of alarms that is used for a mixed node network. Some of these alarms might not be used in all ONS nodes.

Note The Default alarm profile list contains alarm and condition severities that correspond when applicable to default values established in Telcordia GR-253.

Note All default or user-defined severity settings that are Critical (CR) or Major (MJ) are demoted to Minor (MN) in non-service-affecting situations as defined in Telcordia GR-474.

Tip To see the full list of profiles, including those available for loading or cloning, click the Available button. You must load a profile before you can clone it.

Note Up to 10 profiles, including the two reserved profiles—Inherited and Default—can be stored in CTC.

Wherever it is applied, the Default alarm profile sets severities to standard Telcordia GR-253 settings. In the Inherited profile, alarms inherit, or copy, severity from the next-highest level. For example, a card with an Inherited alarm profile copies the severities used by the node housing the card. If you choose the Inherited profile from the network view, the severities at the lower levels (node and card) are copied from this selection.

You do not have to apply a single severity profile to the node-, card-, and port-level alarms. Different profiles can be applied at different levels. You could use the inherited or default profile on a node and on all cards and ports, but apply a custom profile that downgrades an alarm on one particular card. For example, you might choose to downgrade an OC-N unequipped path alarm (UNEQ-P) from Critical (CR) to Not Alarmed (NA) on an optical card because this alarm raises and then clears every time you create a circuit. UNEQ-P alarms for the card with the custom profile would not display on the Alarms tab (but they would still be recorded on the Conditions and History tabs.)

When you modify severities in an alarm profile:

- All Critical (CR) or Major (MJ) default or user-defined severity settings are demoted to Minor (MN) in Non-Service-Affecting (NSA) situations as defined in Telcordia GR-474.
- Default severities are used for all alarms and conditions until you create a new profile and apply it.

The Load and Store buttons are not available for Retrieve and Maintenance users.

The Delete and Store options will only display nodes to delete profiles from or store profiles to if the user has provisioning permission for those nodes. If the user does not have the proper permissions, CTC greys out the buttons and they are not available to the user.

20.5.2 Alarm Profile Buttons

The Alarm Profiles window displays six buttons at the bottom of the screen. Table 20-5 lists and describes each of the alarm profile buttons and their functions.

Table 20-5 Alarm Profile Buttons

Button	Description
New	Creates a new profile.
Load	Loads a profile to a node or a file.
Store	Saves profiles on a node (or nodes) or in a file.
Delete	Deletes profiles from a node.
Compare	Displays differences between alarm profiles (for example, individual alarms that are not configured equivalently between profiles).
Available	Displays all profiles available on each node.
Usage	Displays all entities (nodes and alarm subjects) present in the network and which profiles contain the alarm. Can be printed.

20.5.3 Alarm Profile Editing

Table 20-6 lists and describes the five profile-editing options available when you right-click an alarm item in the profile column (such as Default).

Table 20-6 Alarm Profile Editing Options

Button	Description
Store	Saves a profile in a node or in a file.
Rename	Changes a profile name.
Clone	Creates a profile that contains the same alarm severity settings as the profile being cloned.
Reset	Restores a profile to its previous state or to the original state (if it has not yet been applied).
Remove	Removes a profile from the table editor.

20.5.4 Alarm Severity Options

To change or assign alarm severity, left-click the alarm severity you want to change in the alarm profile column. Seven severity levels appear for the alarm:

- Not Reported (NR)
- Not Alarmed (NA)
- Minor (MN)
- Major (MJ)
- Critical (CR)
- Use Default
- Inherited

Inherited and Use Default severity levels only appear in alarm profiles. They do not appear when you view alarms, history, or conditions.

20.5.5 Row Display Options

In the network or node view, the Alarm Profiles window (Alarm Profile Editor for Node view) displays three check boxes at the bottom of the window:

- Only show service-affecting severities—If unchecked, the editor shows severities in the format *sev1/sev2* where *sev1* is a service-affecting severity and *sev2* is not service-affecting. If checked, the editor only shows *sev1* alarms.
- Hide reference values—Highlights alarms with nondefault severities by clearing alarm cells with default severities.
- Hide identical rows—Hides rows of alarms that contain the same severity for each profile.

20.5.6 Applying Alarm Profiles

In CTC node view, the Alarm Behavior window displays alarm profiles for the node. In card view, the Alarm Behavior window displays the alarm profiles for the selected card. Alarm profiles form a hierarchy. A node-level alarm profile applies to all cards in the node except cards that have their own profiles. A card-level alarm profile applies to all ports on the card except ports that have their own profiles.

At the node level, you can apply profile changes on a card-by-card basis or set a profile for the entire node. At the card-level view, you can apply profile changes on a port-by-port basis or set alarm profiles for all ports on that card. Figure 20-5 shows the E1000-2-G card view of an alarm profile.

Figure 20-5 Card View of an E1000-2-G Card Alarm Profile

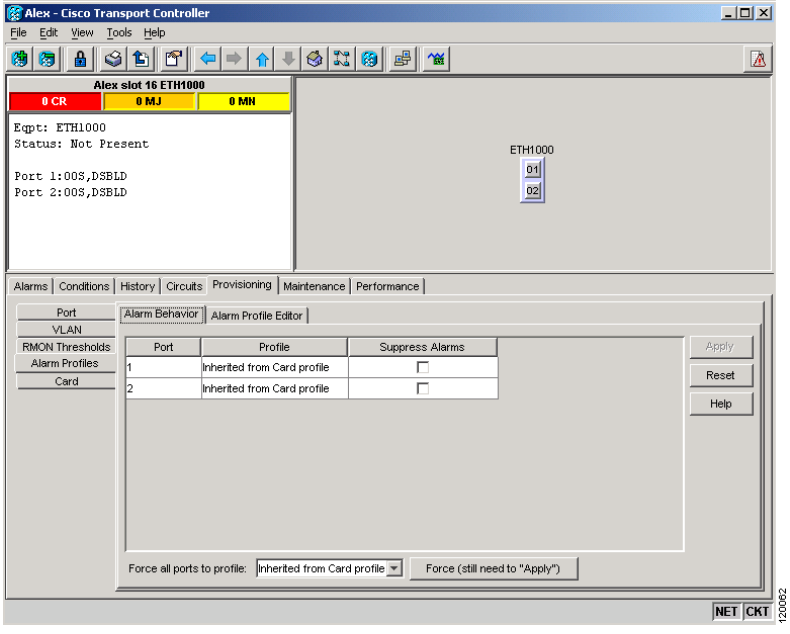

20.6 Alarm Suppression

ONS 15454 nodes have an alarm suppression option that clears raised alarm messages for the node, chassis, one or more slots (cards), or one or more ports. After they are cleared, these alarms change appearance from their normal severity color to white and they can be cleared from the display by clicking Synchronize. Alarm suppression itself raises an alarm called AS-CMD that is shown in applicable Alarms windows. Node-level suppression is shown in the node view Alarms window, and card or port-level suppression is shown in all views. The AS-CMD alarm itself is not cleared by the suppress command. Each instance of this alarm indicates its object separately in the Object column.

A suppression command applied at a higher level does not supersede a command applied at a lower level. For example, applying a node-level alarm suppression command makes all raised alarms for the node appear to be cleared, but it does not cancel out card-level or port-level suppression. Each of these conditions can exist independently and must be cleared independently.

Suppression causes the entity alarm to behave like a Not Reported event. This means that the alarms, having been suppressed from view in the Alarms window, are now only shown in the Conditions window. The suppressed alarms are displayed with their usual visual characteristics (service-affecting status and color-coding) in the window. The alarms still appear in the History window.

See the "NTP-G70 Suppress Alarms or Discontinue Alarm Suppression" procedure on page 7-33.

Note Use alarm suppression with caution. If multiple CTC or TL1 sessions are open, suppressing the alarms in one session suppresses the alarms in all other open sessions.

20.7 External Alarms and Controls

External alarm inputs can be provisioned on the Alarm Interface Controller (AIC) or Alarm Interface Controller–International (AIC-I) cards for external sensors such as an open door and flood sensors, temperature sensors, and other environmental conditions. External control outputs on these two cards allow you to drive external visual or audible devices such as bells and lights. They can control other devices such as generators, heaters, and fans.

You provision external alarms in the AIC card view Provisioning > External Alarms tab and controls in the AIC card view Provisioning > External Controls tab. Up to 4 external alarm inputs and four external controls are available with the AIC card. Up to 12 external alarm inputs and four external controls are available with the AIC-I card. If you also provision the alarm extension panel (AEP) with the AIC-I, there are 32 inputs and 16 outputs.

Note The AEP is compatible with the ONS 15454 ANSI shelf. It is not compatible with the ONS 15454 ETSI shelf.

See the "NTP-G71 Provision External Alarms and Controls on the Alarm Interface Controller Card" procedure on page 7-36 or the "NTP-G72 Provision External Alarms and Controls on the Alarm Interface Controller-International" procedure on page 7-38.

20.7.1 External Alarms

You can provision each alarm input separately. Provisionable characteristics of external alarm inputs include:

- Alarm Type—List of alarm types.
- Severity—CR, MJ, MN, NA, and NR.
- Virtual Wire—The virtual wire associated with the alarm.
- Raised When—Open means that the normal condition is no current flowing through the contact, and the alarm is generated when current does flow; closed means that normal condition is to have current flowing through the contact, and the alarm is generated when current stops flowing.
- Description—CTC alarm log description (up to 63 characters).

Note If you provision an external alarm to raise upon an open contact before you physically connect to the ONS equipment, the alarm will raise until you do create the physical connection.

Note When you provision an external alarm, the alarm object is ENV-IN-*nn*. The variable *nn* refers to the external alarm's number, regardless of the name you assign.

20.7.2 External Controls

You can provision each alarm output separately. Provisionable characteristics of alarm outputs include:

- Control type.
- Trigger type (alarm or virtual wire).
- Description for CTC display.
- Closure setting (manually or by trigger). If you provision the output closure to be triggered, the following characteristics can be used as triggers:
  - Local NE alarm severity—A chosen alarm severity (for example, major) and any higher-severity alarm (in this case, critical) causes output closure.
  - Remote NE alarm severity—Similar to local NE alarm severity trigger setting, but applies to remote alarms.
  - Virtual wire entities—You can provision an alarm that is input to a virtual wire to trigger an external control output.

20.7.3 Virtual Wires

Provisioning the AIC and AIC-I card provides a "virtual wires" option used to route external alarms and controls from different nodes to one or more alarm collection centers. In Figure 20-6, smoke detectors at Nodes 1, 2, 3, and 4 are assigned to Virtual Wire #1, and Virtual Wire #1 is provisioned as the trigger for an external bell at Node 1.

Figure 20-6 External Alarms and Controls Using a Virtual Wire

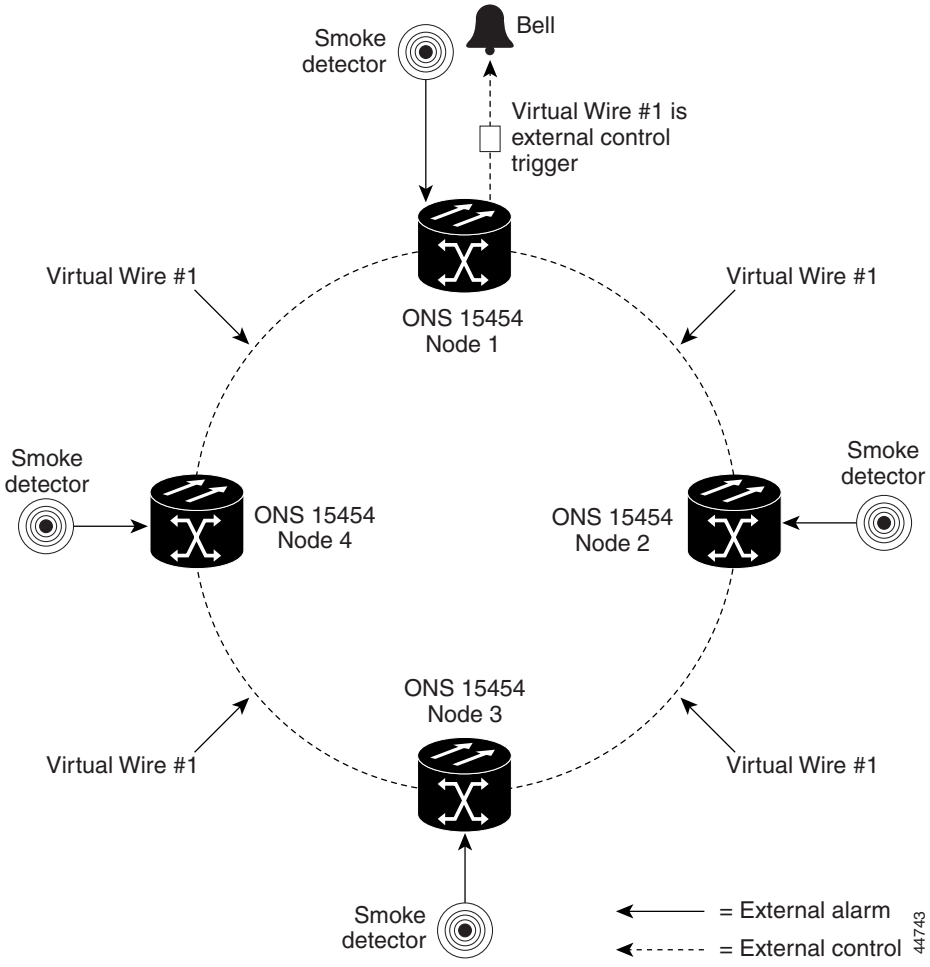

When using AIC virtual wires, you can:

- Assign different external devices to the same virtual wire.
- Assign virtual wires as the trigger type for different external controls.

20.8 Audit Trail

The Cisco ONS 15454 maintains a Telcordia GR-839-CORE-compliant audit trail log that resides on the TCC2. This record shows who has accessed the system and what operations were performed during a given period of time. The log includes authorized Cisco logins and logouts using the operating system command line interface, CTC, and TL1; the log also includes FTP actions, circuit creation/deletion, and user/system generated actions.

Event monitoring is also recorded in the audit log. An event is defined as the change in status of an element within the network. External events, internal events, attribute changes, and software upload/download activities are recorded in the audit trail.

Audit trails are useful for maintaining security, recovering lost transactions and enforcing accountability. Accountability refers to tracing user activities; that is, associating a process or action with a specific user. Users can access the audit trail logs from any management interface (CTC, CTM, TL1).

The audit trail is stored in persistent memory and is not corrupted by processor switches, resets or upgrades. However, if a user pulls both TCC2 cards, the audit trail log is lost.

See the "NTP-G108 Viewing the Audit Trail Records" procedure on page 11-19 and the "NTP-G109 Off-Load the Audit Trail Record" procedure on page 11-21.

20.8.1 Audit Trail Log Entries

Audit trail records capture the following activities:

- User—Name of the user performing the action
- Host—Host from where the activity is logged
- Device ID—IP address of the device involved in the activity
- Application—Name of the application involved in the activity
- Task—Name of the task involved in the activity (view a dialog box, apply configuration, and so on)
- Connection Mode—Telnet, Console, Simple Network Management Protocol (SNMP)
- Category—Type of change: Hardware, Software, Configuration
- Status—Status of the user action: Read, Initial, Successful, Timeout, Failed
- Time—Time of change
- Message Type—Denotes whether the event is Success/Failure type
- Message Details—Description of the change

20.8.2 Audit Trail Capacities

The system is able to store 640 log entries.When this limit is reached, the oldest entries are overwritten with new events. When the log server is 80 percent full, an AUD-LOG-LOW condition is raised and logged (by way of Common Object Request Broker Architecture [CORBA]/CTC).

When the log server reaches a maximum capacity of 640 entries and begins overwriting records that were not archived, an AUD-LOG-LOSS condition is raised and logged. This event indicates that audit trail records have been lost. Until the user off-loads the file, this event occurs only once regardless of the amount of entries that are overwritten by the system.

CTC Information and Shortcuts

Note The terms "Unidirectional Path Switched Ring" and "UPSR" may appear in Cisco literature. These terms do not refer to using Cisco ONS 15xxx products in a unidirectional path switched ring configuration. Rather, these terms, as well as "Path Protected Mesh Network" and "PPMN," refer generally to Cisco's path protection feature, which may be used in any topological network configuration. Cisco does not recommend using its path protection feature in any particular topological network configuration.

This appendix describes the Cisco Transport Controller (CTC) views, menus options, tool options, shortcuts, and table display options. This appendix also describes the shelf inventory data presented in CTC. For more information about CTC, see Chapter 17, “Cisco Transport Controller Operation.”

Note Unless otherwise specified, “ONS 15454” refers to both ANSI and ETSI shelf assemblies.

Display Node, Card, and Network Views

CTC provides three views of the ONS 15454 and the ONS network:

- Node view appears when you first log into an ONS 15454. This view shows a graphic of the ONS 15454 shelf and provides access to tabs and subtabs that you use to manage the node.
- Card view provides access to individual ONS 15454 cards. This view provides a graphic of the card and provides access to tabs and subtabs that you use to manage the card.
- Network view shows all the nodes in a ring. A Superuser can set up this feature so each user will see the same network view, or the user can create a custom view with maps. This view provides access to tabs and subtabs that you use to manage the network.

Table A-1 lists different actions for changing CTC views.

Table A-1 Change CTC Views

To Display	Perform One of the Following
Node view	• Log into a node; node view is the default view. • In network view, double-click a node icon, or right-click the node and choose **Open Node** from the shortcut menu. • In network view, single-click a node icon, then choose **Go To Selected Object View** from the View menu. • From the View menu, choose **Go To Other Node**, then choose the node you want from the shortcut menu. • Use the arrows on the CTC toolbar to navigate up or down views. For example, in network view, click a node, then click the down arrow.
Network view	• In node view, click the up arrow or the Network View tool on the CTC toolbar. • From the View menu, choose **Go To Network View**.
Card view	• In node view, double-click a card or right-click the card and choose **Open Card**. • In node view, single-click a card icon, then choose **Go To Selected Object View** from the View menu. • Use the arrows on the CTC toolbar to navigate up or down views. For example, in node view, click a card, then click the down arrow.

Node Icons on the Network View Map

Table A-2 lists the node icons on the network view map.

Table A-2 Description of Node Icons on Network View Map

Node Name	Icon	Description
SONET SDH Hybrid OADM Hybrid line amplifier Hybrid terminal Passive hybrid terminal Amplified TDM		A SONET, SDH, hybrid, or amplified time-division multiplexing (TDM) node icon is represented as a cylinder with crossed arrows. **Note** Release 4.7 is DWDM only. It does not support SONET, SDH, or hybrid nodes. • A SONET or SDH node can include OC-N cards, electrical cards, cross-connects, and more. • A hybrid optical add/drop multiplexing (OADM) node contains at least one Channel OADM (AD-xC-xx.x) or one Band OADM (AD-xB-xx.x) card and two Advanced Timing, Communications, and Controller (TCC2) cards. TDM cards can be installed in any available slot. • A hybrid line amplifier node contains amplifiers and both TDM and dense wavelength division multiplexing (DWDM) cards. • A hybrid terminal node contains at least one 32-Channel Multiplexer (32MUX-O) card, one Double-Slot 32-Channel Demultiplexer (32DMX-O) card, amplifiers, two TCC2 cards, and TDM cards. • A passive hybrid terminal node has the same equipment as the hybrid terminal node, but does not contain amplifiers. • An amplified TDM node is a node that increases the span length between two ONS 15454 nodes that contain TDM cards and optical amplifiers. Amplified TDM nodes contain either Optical Booster (OPT-BST) amplifiers or AD-1C cards.
Hub		A DWDM hub node icon is represented as a three-dimensional cylinder with amplifiers. A hub node contains at least two 32DMX or 32DMX-O cards and two 32MUX-O. No OADM cards are provisioned.
OADM		A DWDM OADM node icon is represented as a three-dimensional cylinder with arrows. An OADM node contains at least one AD-xC-xx.x or one AD-xB-xx.x. No 32MUX-O, 32DMX-O, or 32DMX cards are provisioned.

Table A-2 Description of Node Icons on Network View Map (continued)

Node Name	Icon	Description
ROADM		A reconfigurable OADM (ROADM) node icon is represented as a three-dimensional cylinder with two amplifier symbols that have arrows between them. An ROADM node contains at least one 32-channel Wavelength Selective Switch (32WSS). A single-slot 32DMX or double-slot 32DMX-O can be installed, but is not required. Transponders (TXPs) and muxponders (MXPs) can be installed in Slots 6 and 12. If amplification is not used, TXPs or MXPs can be installed in Slots 1 and 17. If OPT-BSTs are not installed, Optical Service Channel and Combiner/Separator Module (OSC-CSM) cards are installed in Slots 2 and 16 and Slots 8 and 10 are empty.
Terminal (west)		A terminal (west) node is represented as a three-dimensional cylinder with one amplifier on the west side of the icon. • A terminal node contains one 32DMX or 32DMX-O and one 32-MUX-O. No OADM cards are provisioned. • A flexible terminal node contains a series of OADM and amplifier cards.
Terminal (east)		A terminal (east) node is represented as a three-dimensional square with one amplifier on the east side of the icon. • A terminal node contains one 32DMX or 32DMX-O and one 32MUX-O. No OADM cards are provisioned. • A flexible terminal node contains a series of OADM and amplifier cards.
Line OSC regeneration line		Line and OSC regeneration line nodes are represented as a three-dimensional cylinder with one arrow pointing west and another arrow pointing east. • A line node has only Optical Preamplifier (OPT-PRE) or OPT-BST amplifiers provisioned. • An optical service channel (OSC) regeneration line node contains two OSC-CSM cards.
Unknown		An unknown DWDM node icon is represented as a three-dimensional cylinder with one arrow pointing north. An unknown node means that the provisioned cards do not allow the node to fit any of the defined DWDM node categories.

Manage the CTC Window

Different navigational methods are available within the CTC window to access views and perform management actions. You can double-click and right-click objects in the graphic area and move the mouse over nodes, cards, and ports to view popup status information.

CTC Menu and Toolbar Options

The CTC window menu bar and toolbar provide primary CTC functions. Table A-3 shows the actions that are available from the CTC menu and toolbar.

Table A-3 CTC Menu and Toolbar Options

Menu	Menu Option	Toolbar	Description
File	Add Node		Adds a node to the current session. See the "DLP-G49 Add a Node to the Current Session or Login Group" task on page 2-30.
	Delete Selected Node		Deletes a node from the current session.
	Lock CTC		Locks CTC without closing the CTC session. A user name and password are required to open CTC.
	Print		Prints CTC data. See the "DLP-G113 Print CTC Data" task on page 7-2.
	Export		Exports CTC data. See the "DLP-G114 Export CTC Data" task on page 7-4.
	Exit	—	Closes the CTC session.
Edit	Preferences		Displays the Preferences dialog box, which shows the following tabs: • General—Allows you to change event defaults and manage preferences. • Login Node Groups—Allows you to create login node groups. See the "DLP-G48 Create Login Node Groups" task on page 2-29. • Map—Allows you to customize the network view. See the "DLP-G168 Change the Network View Background Color" task on page 9-15 and the "DLP-G170 Apply a Custom Network View Background Map" task on page 9-17. • Circuit—Allows you to change the color of circuit spans. This task is not applicable on DWDM-only nodes. • Firewall—Sets the Internet Inter-ORB Protocol (IIOP) listener ports for access to the ONS 15454 through a firewall. See the "NTP-G27 Set Up the ONS 15454 for Firewall Access" procedure on page 3-19. • JRE—Allows you to select another Java Runtime Environment (JRE) version. See the "DLP-G52 Change the JRE Version" task on page 2-32.

Table A-3 CTC Menu and Toolbar Options (continued)

Menu	Menu Option	Toolbar	Description
View	Go To Previous View		Displays the previous CTC view.
	Go To Next View		Displays the next CTC view. Available only after you navigate to a previous view. Go to Previous View and Go to Next View are similar to forward and backward navigation in a web browser.
	Go To Parent View		References the CTC view hierarchy: network view, node view, and card view. In card view, this command displays the node view; in node view, the command displays network view. Not available in network view.
	Go To Selected Object View		Displays the object selected in the CTC window.
	Go To Home View		Displays the login node in node view.
	Go To Network View		Displays the network view.
	Go To Other Node		Displays a dialog box allowing you to type in the node name or IP address of a a network node that you want to view.
	Show Status Bar	—	Click this item to display or hide the status bar at the bottom of the CTC window.
	Show Tool Bar	—	Click this item to display or hide the CTC toolbar.
—	—		Zooms out the network view area (toolbar only).
—	—		Zooms in the network view area (toolbar only).
—	—		Zooms in a selected network view area (toolbar only).

Table A-3 CTC Menu and Toolbar Options (continued)

Menu	Menu Option	Toolbar	Description
Tools	Circuits	—	Displays the following options: • Repair Circuits—Repairs incomplete circuits following replacement of the ONS 15454 alarm interface panel (AIP). Refer to the *Cisco ONS 15454 SONET and DWDM Troubleshooting Guide* for more information. • Reconfigure Circuits—Allows you to reconfigure circuits. Not applicable to DWDM nodes. • Set Path Selector Attributes—Allows you to edit path protection or subnetwork connection protection (SNCP) circuit path selector attributes. Not applicable on DWDM nodes. • Set Circuit State—Allows you to change a circuit state. Not applicable on DWDM nodes. • Roll Circuit—(ONS 15600 only.) Allows you to reroute live traffic without interrupting service. Refer to the *Cisco ONS 15600 Procedure Guide.* • Delete Rolls —(ONS 15600 only.) Refer to the *Cisco ONS 15600 Procedure Guide.*
	Overhead Circuits	—	Displays the Repair IP Tunnels option, which fixes circuits that are in the PARTIAL status as a result of node IP address changes. See the "DLP-G111 Repair an IP Tunnel" task on page 6-17.
	Topology Upgrade	—	Displays the following options: • Convert path protection (or SNCP) to BLSR (or MS-SPRing)—Converts a path protection to a bidirectional line switch ring (BLSR). Not applicable to DWDM nodes. • Convert Unprotected to path protection (or SNCP)—Converts a point-to-point or linear add/drop multiplexer (ADM) to path protection. Not applicable to DWDM nodes.
	Manage VLANs	—	Displays a list of VLANs that have been created and allows you to delete VLANs. Not applicable to DWDM nodes.
	Open TL1 Connection		Displays the TL1 session dialog box so you can create a TL1 session to a specific node. Refer to the *Cisco ONS 15454 SONET and SDH TL1 Command Quick Reference Guide*.
	Open IOS Connection		Displays the Cisco IOS command line interface dialog box if a Cisco IOS capable card (ML1000-2 or ML100T-12) is installed in the node. Not applicable to DWDM nodes.
Help	Contents and Index	—	Displays the online help window.
	User Manuals	—	Displays the Cisco ONS 15454 documentation.
	About CTC	—	Displays the software version and the nodes in the CTC session.

Table A-3 CTC Menu and Toolbar Options (continued)

Menu	Menu Option	Toolbar	Description
—	Network Scope	—	Displays the selected network scope. The network scope drop-down list has three options: DWDM, TDM, or All. If you choose DWDM, DWDM and hybrid nodes appear on the network view map. If you choose TDM, TDM and hybrid nodes appear on the network view map. If you choose All, every node on the network appears on the network view map. **Note** Release 4.7 is DWDM only. Hybrid configurations are not supported.
—	—	 	Opens the CTC Alerts dialog box, which shows the status of certain CTC background tasks. When the CTC Alerts toolbar icon contains a red triangle, unread notifications exist. When there are no unread notifications, the CTC Alerts toolbar icon contains a gray triangle (see the icons in the Toolbar column for comparison). Notifications include: • Network disconnection. • Send-PDIP inconsistency—CTC discovers a new node that does not have a SEND-PDIP setting consistent with the login node. • Circuit deletion status—Reports when the circuit deletion process completes if you chose "Notify when complete" as described in the "NTP-G61 Modify and Delete Overhead Circuits" procedure on page 6-17. The CTC Alerts window always reports circuit deletion errors. • Conditions retrieval error. • Software download failure. You can save a notification by clicking the Save button in the CTC Alerts dialog box and navigating to the directory where you want to save the text file. By default, the CTC Alerts dialog box appears automatically. To disable automatic popup, see the "DLP-G53 Configure the CTC Alerts Dialog Box for Automatic Popup" task on page 2-33.

CTC Mouse Options

In addition to the CTC menu bar and toolbar, you can invoke actions by double-clicking CTC window items with your mouse, or by right-clicking an item and selecting actions from shortcut menus. Table A-4 lists the CTC window mouse shortcuts.

Table A-4 CTC Window Mouse Shortcuts

Technique	Description
Double-click	• Node in network view—Displays the node view. • Card in node view—Displays the card view. • Alarm/Event—Displays the object that raised the alarm or event. • Circuits—Displays the Edit Circuit window.
Right-click	• Network view graphic area—Displays a menu that you can use to create a new domain; change the position and zoom level of the graphic image; save the map layout (if you have a Superuser security level); reset the default layout of the network view; set, change, or remove the background image and color; and save or reset the node position. • Node in network view—Displays a menu that you can use to open the node, reset the node icon position to the longitude and latitude set on the Provisioning > General tab, delete the node, fix the node position for automatic layout, provision circuits, provision channels, and update circuits or channels with a new node. • Span in network view—Displays a menu that you can use to view information about the span's source and destination ports, the protection scheme, and the optical or electrical level. • Card in node view—Displays a menu that you can use to open, delete, reset, and change cards. The card that you choose determines the commands that appear. • Card in card view—Displays a menu that you can use to reset the card, or go to the parent view (node view). • Empty slot in node view—Displays a menu with cards that you can choose to preprovision the slot.
Move mouse cursor	• Over node in network view—Displays a summary of node alarms and provides a warning if the node icon has been moved out of the map range. • Over span in network view—Displays circuit (node, slot, port) bandwidth and protection information. For DWDM spans, the optical direction and optical ring ID appear. If the span terminates on the trunk port of a transponder card (TXP or MXP), the associated DWDM wavelength also appears. • Over card in node view—Displays card type, card status, alarm profile status and, depending on the DWDM card type, number of bands or channels. • Over card port in node view—Displays card name, port state, and alarm profile status. • Over card port in card view—Displays port state and alarm profile status. For DWDM cards, the port number is labeled as channel, band, or line depending on the card type along with the port state and alarm profile status.

Node View Shortcuts

Table A-5 shows actions on ONS 15454 cards that you can perform by moving your mouse over the CTC window.

Table A-5 Node View Card-Related Shortcuts

Action	Shortcut
Display card information	In node view, move your mouse over cards in the graphic to display tooltips with the card type, card status (active or standby), the highest level of alarm (if any), and the alarm profile used by the card.
Open, reset, or delete a card	In node view, right-click a card. Choose **Open Card** to display the card in card view, **Delete Card** to delete it, or **Reset Card** to reset the card.
Preprovision a slot	In node view, right-click an empty slot. Choose the card type for which you want to provision the slot from the shortcut menu.
Change a card	In node view, right-click an OC-N card or a DS3 card, and choose **Change Card**. In the Change Card dialog box, choose the card type. Change Card retains all card provisioning, including data communications channel (DCC) terminations, protection, circuits, and ring.

Network View Tasks

Right-click the network view graphic area or a node, span, or domain to display shortcut menus. Table A-6 lists the actions that are available from the network view.

Table A-6 Network Management Tasks in Network View

Action	Task
Open a node	Any of the following: • Double-click a node icon. • Right-click a node icon and choose **Open Node** from the shortcut menu. • Click a node and choose **Go To Selected Object View** from the View menu. • From the View menu, choose **Go To Other Node**. Choose a node from the Select Node dialog box. • Double-click a node alarm or event in the Alarms or History tab.
Move a node icon	Press the **Ctrl** key and the left mouse button simultaneously and drag the node icon to a new location.
Reset node icon position	Right-click a node and choose **Reset Node Position** from the shortcut menu. The node icon moves to the position defined by the longitude and latitude fields on the Provisioning > General tab in node view.
Provision a circuit	Right-click a node. From the shortcut menu, choose **Provision Circuit To** and choose the node where you want to provision the circuit. For circuit creation procedures, see Chapter 6, “Create Channels and Circuits.”

Table A-6 Network Management Tasks in Network View (continued)

Action	Task
Update circuits with new node	Right-click a node and choose **Update Circuits With New Node** from the shortcut menu. Use this command when you add a new node and want to pass circuits through it.
Display a link end point	Right-click a span. From the shortcut menu, choose **Go To** {*<node>* | *<port>* | *<slot>*} for the drop port you want to view. CTC displays the card in card view.
Display span properties	Do any of the following: • Move the mouse over a span; the properties appear near the span. • Click a span; the properties appear in the upper left corner of the window. • Right-click a span; the properties appear at the top of the shortcut menu.
Perform a path protection (ANSI) or SNCP (ETSI) protection switch for an entire span	Right-click a network span and click **Circuits**. In the Circuits on Span dialog box, switch options appear in the path protection (or SNCP) Span Switching field.
Display DWDM span properties	Right-click a DWDM network span and choose **Circuits** from the shortcut menu. The optical channel network connection (OCHNC), optical direction, and circuit appear.
Upgrade a span	Right-click a span and choose **Upgrade Span** from the shortcut menu. Not applicable to DWDM nodes.

Table Display Options

Right-clicking a table column displays a menu. Table A-7 shows table display options, which include rearranging or hiding CTC table columns and sorting table columns by primary or secondary keys.

Table A-7 Table Display Options

Task	Click	Right-Click Shortcut Menu
Resize column	Click while dragging the column separator to the right or left.	—
Rearrange column order	Click while dragging the column header to the right or left.	—
Reset column order	—	Choose **Reset Columns Order/Visibility**.
Hide column	—	Choose **Hide Column**.
Show column	—	Choose **Show Column >** *column_name*.
Display all hidden columns	—	Choose **Reset Columns Order/Visibility**.
Sort table (primary)	Click a column header; each click changes sort order (ascending or descending).	Choose **Sort Column**.

Table A-7 Table Display Options (continued)

Task	Click	Right-Click Shortcut Menu
Sort table (secondary sorting keys)	Press the **Shift** key and simultaneously click the column header.	Choose **Sort Column (incremental)**.
Reset sorting	—	Choose **Reset Sorting**.
View table row count	—	View the number after "Row count=" (it is the last item on the shortcut menu).

Equipment Inventory

In node view, the Inventory tab displays information about the ONS 15454 equipment, including:

- Delete button—After highlighting a card with your mouse, use this button to delete the card from node view.
- Reset button—After highlighting a card with your mouse, use this button to reset the card.
- Location—Identifies where the equipment is installed, either chassis or slot number.
- Eqpt Type—Displays the type of equipment but not the specific card name, for example, OC-12 or DS-1.
- Actual Eqpt Type—Displays the specific card name, for example, OC12 IR/STM4 SH 1310.
- Admin State—Changes the card service state unless network conditions prevent the change. For more information about card administrative states, see Appendix C, "DWDM Enhanced State Model."
  - IS (ANSI) or Unlocked (ETSI)—Places the card in the In-Service and Normal (IS-NR [ANSI]) or Unlocked-enabled (ETSI) service state.
  - OOS,MA (ANSI) or Locked,maintenance (ETSI)—Places the card in the Out-of-Service and Autonomous, Maintenance (OOS-AU,MT [ANSI]) or Unlocked-disabled,maintenance (ETSI) service state.
- Service State—Displays the current card service state, which is an autonomously generated state that gives the overall condition of the card. Service states appear in the format: Primary State-Primary State Qualifier, Secondary State. For more information about card service states, see Appendix C, "DWDM Enhanced State Model."
- HW Part #—Displays the hardware part number; this number is printed on the top of the card or equipment piece.
- HW Rev—Displays the hardware revision number.
- Serial #—Displays the equipment serial number; this number is unique to each card.
- CLEI Code—Displays the Common Language Equipment Identifier code.
- Firmware Rev—Displays the revision number of the software used by the application-specific integrated circuit (ASIC) chip installed on the ONS 15454 card.
- Product ID—Displays the manufacturing product identifier for a hardware component, such as a fan tray, chassis, or card. The Product ID column displays "N/A" for equipment existing before Software Release 4.6.
- Version ID—Displays the manufacturing version identifier for a fan tray, chassis, or card. The Version ID column displays "N/A" for equipment existing before Software Release 4.6.

Hardware Specifications

This appendix contains hardware and software specifications for the ONS 15454 ANSI and ETSI shelf assemblies and cards.

Note Unless otherwise specified, "ONS 15454" refers to both ANSI and ETSI shelf assemblies.

B.1 Shelf Specifications

This section provides specifications for shelf bandwidth; a list of topologies; Cisco Transport Controller (CTC) specifications; the LAN, TL1, modem, and alarm specifications; timing, power, and environmental specifications; and shelf dimensions.

B.1.1 Bandwidth

The ONS 15454 has the following bandwidth specifications:

- Total bandwidth: 240 Gbps
- Data plane bandwidth: 160 Gbps
- SONET/SDH plane bandwidth: 80 Gbps

B.1.2 Configurations

The ONS 15454 can be configured for the following dense wavelength division multiplexing (DWDM) topologies:

- Hubbed rings
- Multihubbed rings
- Point-to-point
- Linear
- Linear with optical add/drop multiplexing (OADM)

B.1.3 Cisco Transport Controller

CTC, the ONS 15454 craft interface software, has the following specifications:

- 10BaseT
- Advanced Timing, Communications, and Control (TCC2) card access: RJ-45 connector
- Backplane access: LAN pin field (ANSI only)
- Front Mount Electrical Connection (FMEC) access: LAN connector on MIC-C/T/P faceplate (ETSI only)

B.1.4 External LAN Interface

The ONS 15454 external LAN interface has the following specifications:

- 10BaseT Ethernet
- Backplane access: LAN pin field (ANSI only)
- FMEC access: LAN connector on MIC-C/T/P faceplate (ETSI only)

B.1.5 TL1 Craft Interface

The ONS 15454 TL1 craft interface has the following specifications:

- Speed: 9600 bps
- TCC2 access: EIA/TIA-232 DB-9 type connector
- Backplane access: CRAFT pin field (ANSI only)

B.1.6 Modem Interface

The ONS 15454 modem interface has the following specifications:

- Hardware flow control
- TCC2: EIA/TIA-232 DB-9 type connector

B.1.7 Alarm Interface

The ONS 15454 alarm interface has the following specifications:

- ETSI
  - Visual: Critical, Major, Minor, Remote
  - Audible: Critical, Major, Minor, Remote
  - FMEC access: 62-Pin DB connector on MIC-A/P faceplate
  - Alarm inputs: Common 32-VDC output for all alarm-inputs, closed contact limited to 2 mA
  - Control outputs: Open contact maximum 60 VDC, closed contact maximum 100 mA (ETSI only)
- ANSI

- Visual: Critical, Major, Minor, Remote
- Audible: Critical, Major, Minor, Remote
- Backplane access: Alarm pin fields
- Alarm contacts: 0.045 mm, –48 V, 50 mA

B.1.8 EIA Interface (ANSI only)

The ONS 15454 electrical interface assembly (EIA) interface has the following specifications:

- SMB: AMP #415504-3 75-ohm, 4-leg connectors
- BNC: Trompeter #UCBJ224 75-ohm 4 leg connector (King or ITT are also compatible)
- AMP Champ: AMP#552246-1 with #552562-2 bail locks

B.1.9 BITS Interface (ANSI only)

The ONS 15454 building integrated timing supply (BITS) interface has the following specifications:

- 2 DS-1 BITS inputs
- 2 derived DS-1 outputs
- Backplane access: BITS pin field

B.1.10 System Timing

The ONS 15454 ANSI has the following system timing specifications:

- Stratum 3 per Telcordia GR-253-CORE
- Free running accuracy: +/– 4.6 ppm
- Holdover stability: 3.7 x 10^{-7}/day, including temperature (< 255 slips in first 24 hours)
- Reference: External BITS, line, internal

The ONS 15454 ETSI has the following system timing specifications:

- Stratum 3E, per ITU-T G.813
- Free running accuracy: +/– 4.6 ppm
- Holdover stability: 3.7 exp –7/day, including temperature (< 255 slips in first 24 hours)
- Reference: External BITS, line, internal

B.1.11 System Power

The ONS 15454 ANSI has the following power specifications:

- Input power: –48 VDC
- Power consumption: 55 W (fan tray only); 650 W (maximum draw with cards)
- Power requirements: –40.5 to –57 VDC
- Power terminals: #6 Lug

- ANSI shelf: 100-A fuse panel (minimum 30 A fuse per shelf)
  HD shelf: 100-A fuse panel (minimum 35 A fuse per shelf)

The ONS 15454 ETSI has the following power specifications:

- Input voltage: –48 VDC
- Power consumption: Configuration dependent, 53 W for fan tray; 650 W (maximum draw with cards)
- Power requirements:
  - Nominal: –48 VDC
  - Tolerance limits: –40.5 to –57.0 VDC
- Power terminals: 3WK3 Combo-D power cable connector (MIC-A/P and MIC-C/T/P faceplates)
- Fusing: 100 A fuse panel; minimum 30 A fuse per shelf

B.1.12 System Environmental Specifications

The ONS 15454 ANSI has the following environmental specifications:

- Operating temperature: 32 to +131 degrees Farenheit (0 to +55 degrees Celsius); -40 to +139 degrees Farenheit (–40 to +65 degrees Celsius) with industrial temperature rated cards
- Operating humidity: 5 to 95%, noncondensing

The ONS 15454 ETSI has the following environmental specifications:

- Operating temperature: 32 to 104 degrees Fahrenheit (0 to +40 degrees Celsius)
- Operating humidity: 5 to 95%, noncondensing

B.1.13 Dimensions

The ONS 15454 ANSI shelf assembly has the following dimensions:

- Height: 18.5 in. (40.7 cm)
- Width: 19 or 23 in. (41.8 or 50.6 cm) with mounting ears attached
- Depth: 12 in. (26.4 cm) (5 in. or 12.7 cm projection from rack)
- Weight: 55 lb (24.947 kg) empty

The ONS 15454 ETSI shelf assembly has the following dimensions:

- Height: 616.5 mm (24.27 in.)
- Width: 535 mm (17 in.) without mounting ears attached
- Depth: 280 mm (11.02 in.)
- Weight: 26 kg empty (57.3 lb)

B.2 General Card Specifications

This section provides power specifications and temperature ranges for all ONS 15454 cards.

B.2.1 Power

Table B-1 provides power consumption information for the ONS 15454 cards.

Table B-1 Individual Card Power Requirements

Card Type	Card Name	Watts	Amperes at –48 V	BTU/Hr.
DWDM Cards	OSCM	Nominal 23 Maximum 26	Nominal 0.48 Maximum 0.54	Nominal 78.48 Maximum 88.71
	OSC-CSM	Nominal 24 Maximum 27	Nominal 0.5 Maximum 0.56	Nominal 81.89 Maximum 92.12
	OPT-PRE	Minimum 25 Nominal 30 Maximum39	Minimum 0.52 Nominal 0.5 Maximum 0.81	Minimum 85.3 Nominal 102.36 Maximum 88.71
	OPT-BST	Nominal 30 Maximum 39	Nominal 0.63 Maximum 0.81	Nominal 102.36 Maximum 88.71
	32MUX-O	Nominal 16 Maximum 25	Nominal 0.33 Maximum 0.52	Nominal 54.59 Maximum 85.3
	32DMX-O	Nominal 16 Maximum 25	Nominal 0.33 Maximum 0.52	Nominal 54.59 Maximum 85.3
	32DMX	Typical 15 Maximum 25	Typical 0.31 Maximum 0.52	Typical 51.21 Maximum 85
	4MD-xx.x	Nominal 17 Maximum 25	Nominal 0.35 Maximum 0.52	Nominal 58.0 Maximum 85.3
	AD-1C-xx.x	Nominal 17 Maximum 25	Nominal 0.35 Maximum 0.52	Nominal 58.0 Maximum 85.3
	AD-2C-xx.x	Nominal 17 Maximum 25	Nominal 0.35 Maximum 0.52	Nominal 58.0 Maximum 85.3
	AD-4C-xx.x	Nominal 17 Maximum 25	Nominal 0.35 Maximum 0.52	Nominal 58.0 Maximum 85.3
	AD-1B-xx.x	Nominal 17 Maximum 25	Nominal 0.35 Maximum 0.52	Nominal 58.0 Maximum 85.3
	AD-4B-xx.x	Nominal 17 Maximum 25	Nominal 0.35 Maximum 0.52	Nominal 58.0 Maximum 85.3
	32WSS	Typical 50 Maximum 65	Typical 1.04 Maximum 1.35	Typical 170 Maximum 221

Card Type	Card Name	Watts	Amperes at –48 V	BTU/Hr.
Control Cards	TCC2	19.20	0.4	66.8
	AIC (ANSI only)	6.01	0.12	20.52
	AIC-I	4.8	0.1	15.3
	AEP	3	(from +5 VDC from AIC-I)	10.2
	MIC-A/P	0.13	via TCC2	—
	MIC-C/T/P	0.38	via TCC2	—
Transponder and Muxponder Cards	TXP_MR_10G	35.00[1]	0.73	119.5
	TXP_MR_10E	Nominal 40 Maximum 50	Nominal 1.11 Maximum 1.04	Nominal 136.6 Maximum 170.7
	TXP_MR_2.5G	35.00[1]	0.73	119.5
	TXPP_MR_2.5G	50[1]	1.04	170.5
	MXP_2.5G_10G	50[1]	1.04	170.7
	MXP_2.5G_10E	Nominal 40 Maximum 50	Nominal 1.11 Maximum 1.04	Nominal 136.6 Maximum 170.7
	MXP_MR_2.5G	Nominal 50 Maximum 60	Nominal 1.04 Maximum 1.25	Nominal 170.7 Maximum 204
	MXPP_MR_2.5G	Nominal 50 Maximum 60	Nominal 1.04 Maximum 1.25	Nominal 170.7 Maximum 204

1. Calculated power; measured power was not available at the time of publication.

B.2.2 Temperature

Table B-2 provides temperature ranges and product names for ONS 15454 cards.

Note The I-Temp symbol is displayed on the faceplate of an I-Temp compliant card. A card without this symbol is C-Temp compliant.

Table B-2 Card Temperature Ranges and Product Names

Card Type	Card Name	C-Temp Product Name (32 to 131 degrees Fahrenheit, 0 to +55 degrees Celsius)	I-Temp Product Name (–40 to 149 degrees Fahrenheit, –40 to +65 degrees Celsius)
Control Cards	TCC2	—	15454-TCC2
	AIC	15454-AIC	15454-AIC-T
	AIC-I	—	15454-AIC-I
	AEP	—	15454-AEP
	MIC-A/P	15454-MIC-A/P	
	MIC-C/T/P	15454 MIC-C/T/P	

Table B-2 Card Temperature Ranges and Product Names (continued)

Card Type	Card Name	C-Temp Product Name (32 to 131 degrees Fahrenheit, 0 to +55 degrees Celsius)	I-Temp Product Name (–40 to 149 degrees Fahrenheit, –40 to +65 degrees Celsius)
Multirate Cards	TXP_MR_10G	15454-TXPMR10G	—
	TXP_MR_10E	15454-10EMRTXP	—
	TXP_MR_2.5G	15454-2.5GMRTXP	—
	TXPP_MR_2.5G	15454-2.5GMRTXP-P	—
	MXP_2.5G_10G	15454-MXP2.5G10G	—
	MXP_2.5G_10E	15454-4x2.5G10EMXP	—
	MXP_MR_2.5G	15454-Datamux2.5GDM	—
	MXPP_MR_2.5G	15454-Datamux2.5GDMP	—
DWDM Cards	OSCM	15454-OSCM	—
	OSC-CSM	15454-OSC-CSM	—
	OPT-PRE	15454-OPT-PRE	—
	OPT-BST	15454-OPT-BST	—
	32MUX-O	15454-32 MUX-O	—
	32DMX-O	15454-32 DMX-O	—
	32DMX	15454-32-DMX	—
	4MD-xx.x	15454-4MD-xx.x	—
	AD-1B-xx.x	15454-AD-1B-xx.x	—
	AD-4B-xx.x	15454-AD-4B-xx.x	—
	AD-1C-xx.x	15454-AD-1C-xx.x	—
	AD-2C-xx.x	15454-AD-2C-xx.x	—
	AD-4C-xx.x	15454-AD-4C-xx.x	—
	32WSS	15454-WSS	—

B.3 Common Control Card Specifications

This section provides specifications for the TCC2, AIC, and AIC-I cards.

For compliance information, refer to the *Cisco Optical Transport Products Safety and Compliance Information* document.

B.3.1 TCC2 Card Specifications

- CTC software
  - Interface: EIA/TIA-232 (local craft access, on TCC2 faceplate)
  - Interface: 10BaseT LAN (on TCC2 faceplate)
  - Interface: 10BaseT LAN (via backplane)

- Synchronization
  - Stratum 3, per Telcordia GR-253-CORE
  - Free running access: Accuracy +/– 4.6 ppm
  - Holdover stability: 3.7 x 10^{-7} per day including temperature (< 255 slips in first 24 hours)
  - Reference: External BITS, line, internal
- Supply voltage monitoring
  - Both supply voltage inputs are monitored.
  - Normal operation: –40.5 to –56.7 V
  - Undervoltage: Major alarm
  - Overvoltage: Major alarm
- Environmental
  - Operating temperature: –40 to +149 degrees Fahrenheit (–40 to +65 degrees Celsius)
  - Operating humidity: 5 to 95%, noncondensing
  - Power consumption: 26.00 W, 0.54 A at –48 V, 88.8 BTU/hr
- Dimensions
  - Height: 12.650 in. (321.3 mm)
  - Width: 0.716 in. (18.2 mm)
  - Depth: 9.000 in. (228.6 mm)
  - Depth with backplane connector: 235 mm (9.250 in.)
  - Weight not including clam shell: 0.7 kg (1.5 lb)

B.3.2 AIC Card Specifications (ANSI only)

Note The ONS 15454 ETSI does not support the AIC card.

- Environmental
  - Operating temperature:
    C-Temp (15454-AIC): 32 to 131 degrees Fahrenheit (0 to +55 degrees Celsius)
    I-Temp (15454-AIC-T): –40 to 149 degrees Fahrenheit (–40 to +65 degrees Celsius)
  - Operating humidity: 5 to 95%, noncondensing
  - Power consumption: 6.01 W, 0.12 A, 20.52 BTU/hr
- Dimensions
  - Height: 12.650 in. (321.3 mm)
  - Width: 0.716 in. (18.2 mm)
  - Depth: 9.000 in. (228.6 mm)
  - Weight: 1.6 lb (0.7 kg)

B.3.3 AIC-I Card Specifications

- Alarm inputs
  - Number of inputs: 12 without alarm extension panel (AEP), 32 with AEP
  - Opto-coupler isolated
  - Label customer provisionable
  - Severity customer provisionable
  - Common 32 V output for all alarm inputs
  - Each input limited to 2 mA
  - Termination: Wire-wrap on backplane without AEP, on AEP connectors with AEP
- Alarm outputs
  - Number of outputs: 4 (user configurable as inputs) without AEP, 16 with AEP
  - Switched by opto MOS (metal oxide semiconductor)
  - Triggered by definable alarm condition
  - Maximum allowed open circuit voltage: 60 VDC
  - Maximum allowed closed circuit current: 100 mA
  - Termination: Wire-wrap on backplane without AEP, on AEP connectors with AEP
- Express orderwire/local orderwire (EOW/LOW)
  - ITU-T G.711, ITU-T G.712, Telcordia GR-253-CORE
  - A-law, mu-law

    Note Due to the nature of mixed coding, in a mixed-mode A-law/mu-law configuration, the orderwire is not ITU-T G.712 compliant.

  - Orderwire party line
  - Dual tone, multifrequency (DTMF) signaling
- User data channel (UDC)
  - Bit rate: 64 kbps, codirectional
  - ITU-T G.703
  - Input/output impedance: 120 ohm
  - Termination: RJ-11 connectors
- Data communications channel (DCC)
  - Bit rate: 576 kbps
  - EIA/TIA-485/V11
  - Input/output impedance: 120 ohm
  - Termination: RJ-45 connectors
- ACC connection for additional alarm interfaces
  - Connection to AEP
- Power monitoring alarming states:

  - Power failure (0 to –38 VDC)
  - Undervoltage (–38 to –40.5 VDC)
  - Overvoltage (beyond –56.7 VDC)
- Environmental
  - Operating temperature: –40 to 149 degrees Fahrenheit (–40 to +65 degrees Celsius)
  - Operating humidity: 5 to 95%, noncondensing
  - Power consumption (including AEP, if used): 8.00 W, 0.17 A, 27.3 BTU/hr
- Dimensions
  - Height: 12.650 in. (321.3 mm)
  - Width: 0.716 in. (18.2 mm)
  - Depth: 9.000 in. (228.6 mm)
  - Weight: 1.8 lb (0.82 kg)

B.3.4 MIC-A/P FMEC Specifications (ETSI only)

Note The ONS 15454 ANSI does not support the MIC-A/P FMEC.

- Power supply input BATTERY B
  - System supply voltage: Nominal –48 VDC
    Tolerance limits: –40.5 to –57.0 VDC
  - Connector: 3WK3 Combo-D power cable connector
- Alarm outputs
  - Voltage (open contact): Maximum 60 VDC
  - Current (closed contact): Maximum 250 mA
  - Connector: 62-pin DB connector (common for inputs/outputs)
- Alarm inputs
  - Voltage (open contact): Maximum 60 VDC
  - Current (closed contact): Maximum 2 mA
  - Connector: 62-pin DB connector (common for inputs/outputs)
- Environmental
  - Operating temperature: –5 to +45 degrees Celsius (+23 to +113 degrees Fahrenheit)
  - Operating humidity: 5 to 95%, noncondensing
  - Power consumption: 0.13 W (provided by +5 V from the TCC2 card), 0.44 BTU/hr
- Dimensions
  - Height: 182 mm (7.165 in.)
  - Width: 32 mm (1.25 in.)
  - Depth: 92 mm (3.62 in.)
  - Depth with backplane connector: 98 mm (3.87 in.)

  - Weight not including clam shell: 0.2 kg (0.5 lb)
- Compliance: Installed ONS 15454 ETSI cards comply with these safety standards:
  - IEC 60950, EN 60950, UL 60950, CSA C22.2 No. 60950, TS 001, AS/NZS 3260

B.3.5 MIC-C/T/P FMEC Specifications (ETSI only)

Note The ONS 15454 ANSI does not support the MIC-C/T/P FMEC.

- Power supply input BATTERY A
  - System supply voltage: Nominal –48 VDC
    Tolerance limits: –40.5 to –57.0 VDC
  - Connector: 3WK3 Combo-D power cable connector
- Timing connector
  - Frequency: 2.048 MHz +/–10 ppm
  - Signal level: 0.75 to 1.5 V
  - Impedance: 75 ohms +/–5% (switchable by jumper to high impedance > 3 kohms)

    Note 120 ohms balanced impedance is possible with external matching cable.

  - Cable attenuation: Up to 6 dB at 2 MHz
  - Connectors: 1.0/2.3 miniature coax connector
- System management serial port:
  - System management serial port craft interface
  - Modem port (for future use)
  - Connectors: 8-pin RJ-45
- System management LAN port connectors:
  - Signal: IEEE 802.3 10BaseT
  - Connectors: 8-pin RJ-45
- Environmental
  - Operating temperature: –5 to +45 degrees Celsius (+23 to +113 degrees Fahrenheit)
  - Operating humidity: 5 to 95%, noncondensing
  - Power consumption: 0.38 W (provided by +5 V from the TCC2 card), 1.37 BTU/hr
- Dimensions
  - Height: 182 mm (7.165 in.)
  - Width: 32 mm (1.25 in.)
  - Depth: 92 mm (3.62 in.)
  - Depth with backplane connector: 98 mm (3.87 in.)
  - Weight not including clam shell: 0.2 kg (0.5 lb)

- Compliance: Installed ONS 15454 ETSI cards comply with these safety standards:
  - IEC 60950, EN 60950, UL 60950, CSA C22.2 No. 60950, TS 001, AS/NZS 3260

B.4 DWDM Card Specifications

This section provides specifications for the OSCM, OSC-CSM, OPT-PRE amplifier, OPT-BST amplifier, 32MUX-O, 32DMX-O, 32DMX, 4MD-xx.x, AD-IC-xx.x, AD-2C-xx.x, AD-4C-xx.x, AD-1B-xx.x, AD-4B-xx.x, and 32WSS cards.

For compliance information, refer to the *Cisco Optical Transport Products Safety and Compliance Information* document.

B.4.1 OSCM Card Specifications

- Line
  - Bit rate: 155 Mbps
  - Code: Scrambled non-return to zero (NRZ)
  - Loopback modes: None
  - Connector: Duplex LC
  - Compliance: Telcordia GR-253-CORE, ITU-T G.957
- Transmitter optical service channel (OSC) signal
  - Maximum transmitter output power: –1 dBm
  - Minimum transmitter output power: –5 dBm
  - Nominal wavelength: 1510-nm +/–10 nm
  - Variable optical attenuator (VOA) necessary in the transmit path to adjust the in-fiber optical power level
- Receiver OSC signal
  - Maximum receiver level: –8 dBm at 10^{-10} BER
  - Minimum receiver level: –40 dBm at 10^{-10} BER
  - Span budget: 40-dB span budget (about 150 km assuming fiber path loss equals 0.25 dB/km)
  - Jitter tolerance: Telcordia GR-253/G.823 compliant
- Environmental
  - Operating temperature:

    C-Temp: –5 to +55 degrees Celsius (+23 to +131 degrees Fahrenheit)
  - Operating humidity: 5 to 95%, noncondensing
- Dimensions
  - Height: 12.65 in. (321.3 mm)
  - Width: 0.92 in. (23.4 mm)
  - Depth: 9.00 in. (228.6 mm)

B.4.2 OSC-CSM Card Specifications

- Line
  - Bit rate: 155 Mbps
  - Code: Scrambled NRZ
  - Loopback modes: None
  - Connector: Duplex LC
  - Compliance: Telcordia GR-253-CORE, ITU-T G.957
- Transmitter OSC signal
  - Maximum transmitter output power: –2 dBm
  - Minimum transmitter output power: –24 dBm
  - Nominal wavelength: 1510-nm +/–10 nm
  - VOA is necessary in the transmit path to adjust the in-fiber optical power level
- Receiver OSC signal
  - Maximum receiver level: –8 dBm at 10^{-10} BER
  - Minimum receiver level: –40 dBm at 10^{-10} BER
  - Span loss budget: 35-dB span budget (approximately 140 km assuming that the fiber path loss is equal to 0.25 dB/km
  - Jitter tolerance: Telcordia GR-253/G.823 compliant
- Environmental
  - Operating temperature:

    C-Temp: –5 to +55 degrees Celsius (+23 to +131 degrees Fahrenheit)
  - Operating humidity: 5 to 95%, noncondensing
- Dimensions
  - Height: 12.65 in. (321.3 mm)
  - Width: 0.92 in. (23.4 mm)
  - Depth: 9.00 in. (228.6 mm)

B.4.3 OPT-PRE Amplifier Card Specifications

- Optical characteristics:
  - Total operating wavelength range: 1530 to 1561.3 nm
  - Gain ripple (peak to valley): 1.5 dB
  - Mid-Access Loss (MAL) range (for Dispersion Compensation Unit (DCU)): 3 to 9 dB
  - Gain range: 5 to 38.5 dBm in constant power mode, 5 to 28 dBm in constant gain mode
  - Minimum gain (standard range): 5.0 dBm

    Maximum gain (standard range with programmable gain tilt): 21 dBm

    Maximum gain (extended range with uncontrolled gain tilt): 38.5 dBm

  - Gain and power regulation over/undershoot: 0.5 dB
  - Limited maximum output power: 17.5 dBm
  - Maximum output power (with full channel load): 17 dB
  - Minimum output power (with one channel): –1 dBm
  - Input power (Pin) range at full channel load: –21.5 to 12 dBm
  - Input power (Pin) range at single channel load: –39.5 to –6 dBm
  - Noise figure at G^3 21 dB = 6.5 dB
  - OSC filter drop (channels) insertion loss maximum: 1 dB
  - OSC filter drop (OSC) insertion loss maximum: 1.8 dB
  - OSC filter add (OSC) insertion loss maximum: 1.3 dB
  - Optical connectors: LC-UPC/2
- Environmental
  - Operating temperature:
    C-Temp: –5 to +55 degrees Celsius (+23 to +131 degrees Fahrenheit)
  - Operating humidity: 5 to 85%, noncondensing
- Dimensions
  - Height: 12.65 in. (332 mm)
  - Width: 0.92 in. (24 mm)
  - Depth: 9.00 in. (240 mm)

B.4.4 OPT-BST Amplifier Card Specifications

- Optical characteristics:
  - Total operating wavelength range: 1530 to 1561.3 nm
  - Gain ripple (peak to valley): 1.5 dB
  - Gain range: 5 to 20 dBm with programmable gain tilt
  - Gain and power regulation over/undershoot: 0.5 dB
  - Limited maximum output power: 17.5 dBm
  - Maximum output power (with full channel load): 17 dB
  - Minimum output power (with one channel): –1 dBm
  - Input power (Pin) range at full channel load: –3 to 12 dBm
  - Input power (Pin) range at single channel load: –21 to –6 dBm
  - Noise figure at G^3 20 dB = 6 dB
  - OSC filter drop (channels) insertion loss maximum: 1 dB
  - OSC filter drop (OSC) insertion loss maximum: 1.8 dB
  - OSC filter add (OSC) insertion loss maximum: 1.3 dB
  - Optical connectors: LC-UPC/2
- Environmental

  - Operating temperature:

    C-Temp: –5 to +55 degrees Celsius (+23 to +131 degrees Fahrenheit)
  - Operating humidity: 5 to 85%, noncondensing
- Dimensions
  - Height: 12.65 in. (332 mm)
  - Width: 0.92 in. (24 mm)
  - Depth: 9.00 in. (240 mm)

B.4.5 32MUX-O Card Specifications

The 32 MUX-O card optical specifications are listed in Table B-3.

Note For power specifications, refer to the "14.1.7 Multiplexer, Demultiplexer, and OADM Card Interface Classes" section on page 14-7.

Table B-3 32 MUX-O Optical Specifications

Parameter	Note	Condition	Min	Max	Unit
Tx filter shape (–1 dB bandwidth)	All standard operating procedures (SOP) and within whole operating temperature range	In 1/32—Out beginning of life (BOL)	+/–180	+/–300	pm
		In 1/32—Out end of life (EOL)	+/–160	+/–300	pm
Insertion loss	All SOP and within whole operating temperature range	In 1/32—Out BOL	4	8.0	dB
		In 1/32—Out EOL	4	8.5	dB
VOA dynamic range	—	—	25	—	dB
Optical monitor tap-splitting ratio on monitor port	Optical monitor port with respect to output port in multiplexer only	—	19	21	dB
Maximum optical input power	—	—	300	—	mW

The 32 MUX-O card has the following additional specifications:

- Environmental
  - Operating temperature:

    C-Temp: –5 to +55 degrees Celsius (+23 to +131 degrees Fahrenheit)
  - Operating humidity: 5 to 95% relative humidity (RH)
- Dimensions
  - Height: 12.65 in. (321.3 mm)
  - Width: 1.84 in. (46.8 mm)

- Depth: 9.00 in. (228.6 mm)

B.4.6 32DMX-O Card Specifications

The 32 DMX-O card optical specifications are listed in Table B-4.

Note For power specifications, refer to the "14.1.7 Multiplexer, Demultiplexer, and OADM Card Interface Classes" section on page 14-7.

Table B-4 32 DMX-O Optical Specifications

Parameter	Note	Condition	Min	Max	Unit
Rx filter shape (–1 dB bandwidth)	All SOP and within whole operating temperature range	In 1/32—Out BOL	+/–180	+/–300	pm
		In 1/32—Out EOL	+/–160	+/–300	pm
Insertion loss	All SOP and within whole operating temperature range	In 1/32—Out BOL	4	8.0	dB
		In 1/32—Out EOL	4	8.5	dB
VOA dynamic range	—	—	25	—	dB
Maximum optical input power	—	—	300	—	mW

The 32 DMX-O card has the following additional specifications:

- Environmental
  - Operating temperature:

    C-Temp: –5 to +55 degrees Celsius (+23 to +131 degrees Fahrenheit)
  - Operating humidity: 5 to 95% RH
- Dimensions
  - Height: 12.65 in. (321.3 mm)
  - Width: 1.84 in. (46.8 mm)
  - Depth: 9.00 in. (228.6 mm)

B.4.7 32DMX Card Specifications

The 32DMX card optical specifications are listed in Table B-5.

Note For power specifications, refer to the "14.1.7 Multiplexer, Demultiplexer, and OADM Card Interface Classes" section on page 14-7.

Table B-5 32 DMX Optical Specifications

Parameter	Condition	Note	Min	Typical	Max	Units
–1 dB bandwidth	COM RX => TX 1, 32 (OUT)	All SOP and within whole operating temperature range, connectors included, and for maximum VOA operating attenuation.	+/-110	—	—	pm
–3 dB bandwidth			+/-200	—	—	pm
Insertion loss	COM RX => TX 1, 32	All SOP, and within whole operating temperature range, connectors included.	—	—	5.5	dB
VOA dynamic range	COM RX => TX 1, 32	—	25	—	—	dB
Maximum optical input power	—	—	300	—	—	mW

The 32 DMX card has the following additional specifications:

- Environmental
  - Operating temperature:

    C-Temp: –5 to +55 degrees Celsius (+23 to +131 degrees Fahrenheit)
  - Operating humidity: 5 to 95% RH
- Dimensions
  - Height: 12.65 in. (321.3 mm)
  - Width: 0.92 in. (23.4 mm)
  - Depth: 9.00 in. (228.6 mm)

B.4.8 4MD-xx.x Card Specifications

The 4MD-xx.x card optical specifications are listed in Table B-6.

Note For power specifications, refer to the "14.1.7 Multiplexer, Demultiplexer, and OADM Card Interface Classes" section on page 14-7.

Table B-6 32 MUX-O Optical Specifications

Parameter	Note	Condition	Min	Max	Unit
Trx filter shape (–0.5 dB bandwidth $TrxBW_2$)	All SOP and within whole operating temperature range	COM Rx—xx.xx Tx COM Rx—yy.yy Tx COM Rx—zz.zz Tx COM Rx—kk.kk Tx xx.xx Rx—COM Tx yy.yy Rx—COM Tx zz.zz Rx—COM Tx kk.kk Rx—COM Tx	+/–180	—	pm
Insertion loss demultiplexer section	All SOP and within whole operating temperature range	COM Rx—xx.xx Tx	—	1.9	dB
		COM Rx—yy.yy Tx	—	2.4	dB
		COM Rx—zz.zz Tx	—	2.8	dB
		COM Rx—kk.kk Tx	—	3.3	dB
Insertion loss multiplexer section	All SOP and within whole operating temperature range (Two connectors included)	xx.xx Rx—COM Tx	—	3.6	dB
		yy.yy Rx—COM Tx	—	3.2	dB
		zz.zz Rx—COM Tx	—	3.0	dB
		kk.kk Rx—COM Tx	—	2.6	dB
VOA dynamic range	—	—	25	—	dB
Maximum optical input power	—	—	300	—	mW

The 4MD-xx.x card has the following additional specifications:

- Environmental
  - Operating temperature:

    C-Temp: –5 to +55 degrees Celsius (+23 to +131 degrees Fahrenheit)
  - Operating humidity: 5 to 95% RH
- Dimensions
  - Height: 12.65 in. (321.3 mm)
  - Width: 0.92 in. (23.4 mm)
  - Depth: 9.00 in. (228.6 mm)
- For compliance information, refer to *Cisco Optical Transport Products Safety and Compliance Information*.

B.4.9 AD-1C-xx.x Card Specifications

Table B-7 lists the AD-1C-xx.x optical specifications.

Table B-7 AD-1C-xx.x Card Optical Specifications

Parameter	Condition	Note	Min	Max	Unit
Trx filter shape (–0.5 dB bandwidth) $TrxBW_2$	COM Rx—xx.xx Tx xx.xx Rx—COM Tx	All SOP and within whole operating temperature range	+/–180	—	pm
Rfx filter shape (–0.5 dB bandwidth) $RfxBW_2$	COM Rx—Exp Tx Exp Rx—COM Tx	All SOP and within whole operating temperature range	+/–180	—	pm
Insertion loss (drop section)	COM Rx—xx.xx Tx	All SOP and within whole operating temperature range (two connectors included)	—	2.0	dB
Insertion loss (express section)	COM Rx—Exp Tx Exp Rx—COM Tx	VOA at minimum attenuation; all SOP and within whole operating temperature range (two connectors included)	—	2.4 or 1.2	dB
Insertion loss (add section)	xx.xx Rx—COM Tx	VOA at minimum attenuation; all SOP and within whole operating temperature range (two connectors included)	—	2.6	dB
VOA dynamic range	—	—	30	—	dB
Maximum optical input power	—	—	300	—	mW

AD-1C-xx.x optical input and output power varies with amplifier output levels and the class of transponder interfaces used. See Table 14-3 on page 14-7 through Table 14-6 on page 14-9 for this information.

The AD-1C-xx.x card has the following additional specifications:

- Environmental
  - Operating temperature:

    C-Temp: –5 to +55 degrees Celsius (+23 to +131 degrees Fahrenheit)
  - Operating humidity: Telcordia GR-63 5.1.1.3 compliant; 5 to 95% RH
- Dimensions
  - Height: 12.650 in. (321.3 mm)
  - Width: 0.92 in. (23.4 mm)
  - Depth: 9.0 in. (228.6 mm)

B.4.10 AD-2C-xx.x Card Specifications

Table B-8 lists the AD-2C-xx.x optical specifications.

Table B-8 AD-2C-xx.x Card Optical Specifications

Parameter	Note	Condition	Min	Max	Unit
Trx filter shape (–0.5 dB bandwidth) $TrxBW_2$	All SOP and within whole operating temperature range	COM Rx—xx.xx Tx COM Rx—yy.yy Tx	+/–180	—	pm
		xx.xx Rx—COM Tx yy.yy Rx—COM Tx	+/–180	—	
Rfx filter shape (–0.5 dB bandwidth) $RfxBW_2$	All SOP and within whole operating temperature range	COM Rx—Exp Tx Exp Rx—COM Tx	+/–180	—	pm
Insertion loss (drop section)	All SOP and within whole operating temperature range (two connectors included)	COM Rx—xx.xx Tx	—	2.0	dB
		COM Rx—yy.yy Tx	—	2.4	dB
Insertion loss (express section)	VOA at minimum attenuation; all SOP and within whole operating temperature range (two connectors included)	COM Rx—Exp Tx	—	2.7	dB
		Exp Rx—COM Tx	—	1.6	dB
Insertion loss (add section)	VOA at minimum attenuation; all SOP and within whole operating temperature range (two connectors included)	xx.xx Rx—COM Tx	—	3.1	dB
		yy.yy Rx—COM Tx	—	2.7	dB
VOA dynamic range	—	—	30	—	dB
Maximum optical input power	—	—	300	—	mW

AD-2C-xx.x optical input and output power varies with amplifier output levels and the class of transponder interfaces used. See Table 14-3 on page 14-7 through Table 14-6 on page 14-9 for this information.

The AD-2C-xx.x has the following additional specifications:

- Environmental
  - Operating temperature:

    C-Temp: –5 to +55 degrees Celsius (+23 to +131 degrees Fahrenheit)
  - Operating humidity: Telcordia GR-63 5.1.1.3 compliant; 5 to 95% RH
- Dimensions
  - Height: 12.650 in. (321.3 mm)
  - Width: 0.92 in. (23.4 mm)
  - Depth: 9.0 in. (228.6 mm)

B.4.11 AD-4C-xx.x Card Specifications

Table B-9 lists the AD-4C-xx.x optical specifications.

Table B-9 AD-4C-xx.x Optical Specifications

Parameter	Note	Condition	Min	Max	Unit
Channel grid	See Table B-10	—	—	—	—
Trx filter shape (–0.5 dB bandwidth) $TrxBW_2$	All SOP and within whole operating temperature range	COM Rx—xx.xx Tx COM Rx—yy.yy Tx COM Rx—zz.zz Tx COM Rx—kk.kk Tx xx.xx Rx—COM Tx yy.yy Rx—COM Tx	+/–180	—	pm
Rfx filter shape (–1 dB bandwidth) $RfxBW_2$	All SOP and within whole operating temperature range	COM Rx—Exp Tx Exp Rx—COM Tx	—	—	pm
Insertion loss (drop section)	All SOP and within whole operating temperature range (two connectors included)	COM Rx—xx.xx Tx	—	5.5	dB
		COM Rx—yy.yy Tx	—	5.0	dB
		COM Rx—zz.zz Tx	—	4.5	dB
		COM Rx—kk.kk Tx	—	4.1	dB
Insertion loss (express section)	VOA at minimum attenuation; all SOP and within whole operating temperature range (two connectors included)	COM Rx—Exp Tx	—	2.7	dB
		Exp Rx—COM Tx	—	1.2	dB
Insertion loss (add section)	VOA at minimum attenuation; all SOP and within whole operating temperature range (two connectors included)	xx.xx Rx—COM Tx	—	3.9	dB
		yy.yy Rx—COM Tx	—	4.3	dB
		zz.zz Rx—COM Tx	—	4.5	dB
		kk.kk Rx—COM Tx	—	4.9	dB
VOA dynamic range	—	—	30	—	dB
Maximum optical input power	—	—	300	—	mW

AD-4C-xx.x optical input and output power varies with amplifier output levels and the class of transponder interfaces used. See Table 14-3 on page 14-7 through Table 14-6 on page 14-9 for this information.

The AD-4C-xx.x has the following additional specifications:

- Environmental
  - Operating temperature:

    C-Temp: –5 to +55 degrees Celsius (+23 to +131 degrees Fahrenheit)
  - Operating humidity: Telcordia GR-63 5.1.1.3 compliant; 5 to 95% RH
- Dimensions
  - Height: 12.650 in. (321.3 mm)
  - Width: 0.92 in. (23.4 mm)
  - Depth: 9.0 in. (228.6 mm)

B.4.12 AD-1B-xx.x Card Specifications

Table B-10 lists the unit names, band IDs, channel IDs, frequencies, and wavelengths assigned to the eight versions of the AD-1B-xx.x card.

Table B-10 AD-1B-xx.x Channel Allocation Plan by Band

Unit Name	Band ID	Channel ID	Frequency (GHz)	Wavelength (nm)
AD-1B-30.3	B30.3	30.3	195.9	1530.33
		30.7	195.85	1530.72
		31.1	195.8	1531.12
		31.5	195.75	1531.51
		31.9	195.7	1531.90
		32.2	195.65	1532.29
		32.6	195.6	1532.68
		33.3	195.55	1533.07
AD-1B-34.2	B34.2	34.2	195.4	1534.25
		34.6	195.35	1534.64
		35.0	195.3	1535.04
		35.4	195.25	1535.43
		35.8	195.2	1535.82
		36.2	195.15	1536.22
		36.6	195.1	1536.61
		37.0	195.05	1537.00
AD-1B-38.1	B38.1	38.1	194.9	1538.19
		38.5	194.85	1538.58
		38.9	194.8	1538.98
		39.3	194.75	1539.37
		39.7	194.7	1539.77
		40.1	194.65	1540.16
		40.5	194.6	1540.56
		40.9	194.55	1540.95
AD-1B-42.2	B42.1	42.1	194.4	1542.14
		42.5	194.35	1542.54
		42.9	194.3	1542.94
		43.3	194.25	1543.33
		43.7	194.2	1543.73
		44.1	194.15	1544.13
		44.5	194.1	1544.53
		44.9	194.05	1544.92

Table B-10 AD-1B-xx.x Channel Allocation Plan by Band (continued)

Unit Name	Band ID	Channel ID	Frequency (GHz)	Wavelength (nm)
AD-1B-46.1	B46.1	46.1	193.9	1546.12
		46.5	193.85	1546.52
		46.9	193.8	1546.92
		47.3	193.75	1547.32
		47.7	193.7	1547.72
		48.1	193.65	1548.11
		48.5	193.6	1548.51
		48.9	193.55	1548.91
AD-1B-50.1	B50.1	50.1	193.4	1550.12
		50.5	193.35	1550.52
		50.9	193.3	1550.92
		51.3	193.25	1551.32
		51.7	193.2	1551.72
		52.1	193.15	1552.12
		52.5	193.1	1552.52
		52.9	193.05	1552.93
AD-1B-54.1	B54.1	54.1	192.9	1554.13
		54.5	192.85	1554.54
		54.9	192.8	1554.94
		55.3	192.75	1555.34
		55.7	192.7	1555.75
		56.1	192.65	1556.15
		56.5	192.6	1556.96
		56.9	192.55	1556.96
AD-1B-58.1	B58.1	58.1	192.4	1558.17
		58.5	192.35	1558.58
		58.9	192.3	1558.98
		59.3	192.25	1559.39
		59.7	192.2	1559.79
		60.2	192.15	1560.20
		60.6	192.1	1560.61
		61.0	192.05	1561.01

Table B-11 lists AD-1B-xx.x optical specifications.

Table B-11 AD-1B-xx.x Optical Specifications

Parameter	Note	Condition	Min	Max	Unit
–1 dB bandwidth	All SOP and within whole operating environmental range	COM Rx—Band Tx Band Rx—COM Tx	3.6	—	nm
–1 dB bandwidth	All SOP and within whole operating temperature range	COM Rx—Exp Tx Exp Rx—COM Tx	Refer to Table B-12.		nm
Insertion loss (drop section)	All SOP and within whole operating environmental range; two connectors included, VOA set at minimum attenuation	COM Rx—Band Tx	—	3.0	dB
Insertion loss (express section)	All SOP and within whole operating environmental range; two connectors included	Exp Rx—COM Tx	—	1.6	dB
	All SOP and within whole operating environmental range; two connectors included, VOA set at its minimum attenuation	COM Rx—Exp Tx	—	2.2	dB
Insertion loss (add section)	All SOP and within whole operating environmental range; two connectors included	Band Rx—COM Tx	—	2.2	dB
VOA dynamic range	—	—	30	—	dB
Maximum optical input power	—	—	300	—	mW

Table B-12 lists the range of wavelengths for the receive (express) band.

Table B-12 AD-1B-xx.x Transmit and Receive Dropped Band Wavelength Ranges

	Rx (Express) Band	
Tx (Dropped) Band	Left Side (nm)	Right Side (nm)
B30.3	—	Wavelengths 1533.825 or higher
B34.2	Wavelengths 1533.395 or lower	Wavelengths 1537.765 or higher
B38.1	Wavelengths 1537.325 or lower	Wavelengths 1541.715 or higher
42.1	Wavelengths 1541.275 or lower	Wavelengths 1545.695 or higher
46.1	Wavelengths 1545.245 or lower	Wavelengths 1549.695 or higher
50.1	Wavelengths 1549.235 or lower	Wavelengths 1553.705 or higher
54.1	Wavelengths 1553.255 or lower	Wavelengths 1557.745 or higher
58.1	Wavelengths 1557.285 or lower	—

AD-1B-xx.x optical input and output power varies with amplifier output levels and the class of transponder interfaces used. See Table 14-3 on page 14-7 through Table 14-6 on page 14-9 for this information.

The AD-1B-xx.x card has the following additional specifications:

- Environmental
  - Operating temperature:

    C-Temp: –5 to +55 degrees Celsius (+23 to +131 degrees Fahrenheit)
  - Operating humidity: Telcordia GR-63 5.1.1.3 compliant; 5 to 95% RH
- Dimensions
  - Height: 12.650 in. (321.3 mm)
  - Width: 0.92 in. (23.4 mm)
  - Depth: 9.0 in. (228.6 mm)

B.4.13 AD-4B-xx.x Card Specifications

Table B-13 lists the unit names, band IDs, channel IDs, frequencies, and wavelengths assigned to the two versions of the card.

Table B-13 AD-4B-xx.x Channel Allocation Plan by Band

Unit Name	Band ID	Channel ID	Frequency (GHz)	Wavelength (nm)
AD-4B-30.3	B30.3	30.3	195.9	1530.33
		30.7	195.85	1530.72
		31.1	195.8	1531.12
		31.5	195.75	1531.51
		31.9	195.7	1531.90
		32.2	195.65	1532.29
		32.6	195.6	1532.68
		33.3	195.55	1533.07
	B34.2	34.2	195.4	1534.25
		34.6	195.35	1534.64
		35.0	195.3	1535.04
		35.4	195.25	1535.43
		35.8	195.2	1535.82
		36.2	195.15	1536.22
		36.6	195.1	1536.61
		37.0	195.05	1537.00
	B38.1	38.1	194.9	1538.19
		38.5	194.85	1538.58
		38.9	194.8	1538.98
		39.3	194.75	1539.37
		39.7	194.7	1539.77
		40.1	194.65	1540.16
		40.5	194.6	1540.56
		40.9	194.55	1540.95
	B42.1	42.1	194.4	1542.14
		42.5	194.35	1542.54
		42.9	194.3	1542.94
		43.3	194.25	1543.33
		43.7	194.2	1543.73
		44.1	194.15	1544.13
		44.5	194.1	1544.53
		44.9	194.05	1544.92

Table B-13 AD-4B-xx.x Channel Allocation Plan by Band (continued)

Unit Name	Band ID	Channel ID	Frequency (GHz)	Wavelength (nm)
AD-4B-46.1	B46.1	46.1	193.9	1546.12
		46.5	193.85	1546.52
		46.9	193.8	1546.92
		47.3	193.75	1547.32
		47.7	193.7	1547.72
		48.1	193.65	1548.11
		48.5	193.6	1548.51
		48.9	193.55	1548.91
	B50.1	50.1	193.4	1550.12
		50.5	193.35	1550.52
		50.9	193.3	1550.92
		51.3	193.25	1551.32
		51.7	193.2	1551.72
		52.1	193.15	1552.12
		52.5	193.1	1552.52
		52.9	193.05	1552.93
	B54.1	54.1	192.9	1554.13
		54.5	192.85	1554.54
		54.9	192.8	1554.94
		55.3	192.75	1555.34
		55.7	192.7	1555.75
		56.1	192.65	1556.15
		56.5	192.6	1556.96
		56.9	192.55	1556.96
	B58.1	58.1	192.4	1558.17
		58.5	192.35	1558.58
		58.9	192.3	1558.98
		59.3	192.25	1559.39
		59.7	192.2	1559.79
		60.2	192.15	1560.20
		60.6	192.1	1560.61
		61.0	192.05	1561.01

Table B-14 lists AD-4B-xx.x optical specifications.

Table B-14 AD-4B-xx.x Optical Specifications

Parameter	Note	Condition	Min	Max	Unit
–1 dB bandwidth	All SOP and within whole operating environmental range	COM Rx—Band Tx Band Rx—COM Tx	3.6	—	nm
–1 dB bandwidth	All SOP and within whole operating temperature range	COM Rx—Exp Tx Exp Rx—COM Tx	Refer to Table B-15.		nm
Insertion loss (drop section)	All SOP and within whole operating environmental range; two connectors included, VOA set at minimum attenuation	COM Rx—Band Tx 30.3/46.1	—	2.9	dB
		COM Rx—Band Tx 34.2/50.1	—	3.3	dB
		COM Rx—Band Tx 38.1/54.1	—	3.8	dB
		COM Rx—Band Tx 42.1/58.1	—	4.5	dB
Insertion loss (express section)	All SOP and within whole operating environmental range; two connectors included	Exp Rx—COM Tx	—	4.9	dB
	All SOP and within whole operating environmental range; two connectors included, VOA set at its minimum attenuation	COM Rx—Exp Tx	—	3	dB
Insertion loss (add section)	All SOP and within whole operating environmental range; two connectors included	Band Rx 30.3/46.1—COM Tx	—	3.5	dB
		Band Rx 34.2/50.1—COM Tx	—	2.8	dB
		Band Rx 38.1/54.1—COM Tx	—	2.3	dB
		Band Rx 42.1/58.1—COM Tx	—	1.8	dB
VOA dynamic range	—	—	30	—	dB
Maximum optical input power	—	—	300	—	mW

Table B-15 lists the range of wavelengths for the receive (express) band.

Table B-15 AD-4B-xx.x Transmit and Receive Dropped Band Wavelength Ranges

	Rx (Express) Band	
Tx (Dropped) Band	Left Side (nm)	Right Side (nm)
B30.3	—	Wavelengths1533.825 or higher
B34.2	Wavelengths 1533.395 or lower	Wavelengths 1537.765 or higher
B38.1	Wavelengths 1537.325 or lower	Wavelengths 1541.715 or higher
B42.1	Wavelengths 1541.275 or lower	Wavelengths 1545.695 or higher

Table B-15 AD-4B-xx.x Transmit and Receive Dropped Band Wavelength Ranges (continued)

	Rx (Express) Band	
Tx (Dropped) Band	**Left Side (nm)**	**Right Side (nm)**
B46.1	Wavelengths 1545.245 or lower	Wavelengths 1549.695 or higher
B50.1	Wavelengths 1549.235 or lower	Wavelengths 1553.705 or higher
B54.1	Wavelengths 1553.255 or lower	Wavelengths 1557.745 or higher
B58.1	Wavelengths 1557.285 or lower	—

AD-4B-xx.x optical input and output power varies with amplifier output levels and the class of transponder interfaces used. See Table 14-3 on page 14-7 through Table 14-6 on page 14-9 for this information.

The AD-4B-xx.x has the following additional specifications:

- Environmental
  - Operating temperature:

    C-Temp: –5 to +55 degrees Celsius (+23 to +131 degrees Fahrenheit)
  - Operating humidity: Telcordia GR-63 5.1.1.3 compliant; 5 to 95% RH
- Dimensions
  - Height: 12.650 in. (321.3 mm)
  - Width: 0.92 in. (23.4 mm)
  - Depth: 9.0 in. (228.6 mm)

B.4.14 32WSS Card Specifications

The 32WSS card optical specifications are listed in Table B-4.

Note For power specifications, refer to the "14.1.7 Multiplexer, Demultiplexer, and OADM Card Interface Classes" section on page 14-7.

Table B-16 32WSS Optical Specifications

Parameter	Condition	Note	Min	Typical	Max	Units
–0.25 dB bandwidth	EXP RX => COM TX	All SOP and within whole operating temperature range, connectors included, and for maximum VOA operating attenuation.	+/–/95	—	—	pm
–0.5 dB bandwidth			+/–115	—	—	pm
–1.0 dB bandwidth			+/–135	—	—	pm
–0.25 dB bandwidth	Add 1, 32 => COM TX		+/–115	—	—	pm
–0.5 dB bandwidth			+/–135	—	—	pm
–1.0 dB bandwidth			+/–160	—	—	pm

Table B-16 32WSS Optical Specifications (continued)

Parameter	Condition	Note	Min	Typical	Max	Units
Insertion loss	EXP RX => COM TX	All SOP, any optical switch state, and within whole operating temperature range, connectors included.	—	—	11.3	dB
	COM RX => EXP TX	—	—	—	1.5	dB
	Add 1, 32 => COM TX	—	—	—	7.6	dB
	COM RX => DROP TX	—	6	—	8.5	dB
VOA dynamic range	EXP RX => COM TX	—	20	—	—	dB
	Add 1, 32 => COM TX	—	25	—	—	dB
Maximum optical input power	—	—	300	—	—	mW

The 32WSS card has the following additional specifications:

- Environmental
  - Operating temperature:

    C-Temp: –5 to +55 degrees Celsius (+23 to +131 degrees Fahrenheit)
  - Operating humidity: 5 to 95% RH
- Dimensions
  - Height: 12.65 in. (321.3 mm)
  - Width: 1.84 in. (46.8 mm)
  - Depth: 9.00 in. (228.6 mm)

B.5 Transponder and Muxponder Card Specifications

This section provides specifications for the TXP_MR_10G, MXP_2.5G_10G, TXP_MR_2.5G, TXPP_MR_2.5G, MXP_MR_2.5G, MXPP_MR_2.5G, MXP_2.5G_10E, and TXP_MR_2.5G cards.

For compliance information, refer to the *Cisco Optical Transport Products Safety and Compliance Information* document.

B.5.1 TXP_MR_10G Card Specifications

The TXP_MR_10G card has the following specifications:

- Line (trunk side)
  - Bit rate:

    9.95328 Gbps for OC-192/STM-64

    10.70923 Gbps with ITU-T G.709 Digital Wrapper/FEC

    10.3125 Gbps for 10 GE

    11.095 Gbps with ITU-T G.709 Digital Wrapper/FEC over 10GE
  - Code: Scrambled NRZ
  - Fiber: 1550-nm single-mode
  - Maximum chromatic dispersion allowance: 1000 ps/nm
  - Loopback modes: Terminal and facility

Caution You must use a 15-dB fiber attenuator (10 to 20 dB) when working with the TXP_MR_10G card in a loopback on the trunk port. Do not use direct fiber loopbacks with the TXP_MR_10G card. Using direct fiber loopbacks causes irreparable damage to the TXP_MR_10G card.

  - Connectors: LC
  - Compliance Telcordia GR-253-CORE, ITU-T G.707, ITU-T G.691
- Transmitter (trunk side)
  - Maximum transmitter output power: +3.5 dBm
  - Minimum transmitter output power: +2.5 dBm
  - Transmitter: Lithium Niobate (LN) external modulator transmitter
  - Wavelength stability (drift): +/- 25 picometers (pm)

Note An optical device on the card keeps the laser wavelength locked as closely as possible to the ITU nominal value. The allowed drift is +/- 25 pm.

- Currently available wavelengths and versions of MXP_2.5G_10G:

  ITU grid blue band:
  - 1542.14 to 1542.94 nm, 10M-L1-42.1
  - 1543.73 to 1544.53 nm, 10M-L1-43.7

  ITU grid red band:
  - 1558.17 to 1558.98 nm, 10M-L1-58.1
  - 1559.79 to 1560.61 nm, 10M-L1-59.7
- Receiver (trunk side):
  - Receiver input power (no FEC, unamplified, 23 dB OSNR, BER 1 * 10 exp – 12): –8 to –21 dBm
  - Receiver input power (no FEC, unamplified, 23 dB OSNR, @ +/– 1000 ps/nm BER 1 * 10 exp – 12): –8 to –19 dBm

  - Receiver input power (no FEC, amplified, 19 dB OSNR, BER 1 * 10 exp – 12): –8 to –20 dBm
  - Receiver input power (no FEC, amplified, 19 dB OSNR, @ +/– 1000 ps/nm BER 1 * 10 exp – 12):–8 to –18 dBm
  - Receiver input power (FEC, unamplified, 23 dB OSNR, BER 8 * 10 exp – 5): –8 to –24 dBm
  - Receiver input power (FEC, unamplified, 23 dB OSNR, @ +/– 1000 ps/nm, BER 8 * 10 exp – 5): –8 to –22 dBm
  - Receiver input power (FEC, amplified, 9 dB OSNR, BER 8 * 10 exp – 5): –8 to –18 dBm
  - Receiver input power (FEC, unamplified, 11 dB OSNR, @ +/– 800 ps/nm, BER 8 * 10 exp – 5): –8 to –18 dBm
- Line (client side)
  - Bit rate: 9.95328 Gbps or 10.3125 Gbps
  - Code: Scrambled NRZ
  - Fiber: 1550-nm single-mode
  - Maximum chromatic dispersion allowance: Compliant with SR-1 specification for OC-192. In the case of 10 GE, allowance is up to 10km of SMF fiber of dispersion.
  - Loopback modes: Terminal and facility
  - Connectors: LC
  - Compliance: Telcordia GR-253-CORE, ITU-T G.707, ITU-T G.697, 10GE BASE LR
- Transmitter (client side)
  - Maximum transmitter output power: –1 dBm
  - Minimum transmitter output power: –6 dBm
  - Center wavelength: 1290 to 1330 nm
  - Nominal wavelength: 1310 nm
  - Transmitter: Distributed feedback (DFB) laser
- Receiver (client side)
  - Maximum receiver level: –1 dBm at BER 1 * 10 exp – 12
  - Minimum receiver level: –14 dBm at BER 1 * 10 exp – 12
  - Receiver: APD
  - Link loss budget: 8 dB minimum, at BER = 1 * 10 exp – 12
  - Receiver input wavelength range: 1290 to 1605 nm
- Environmental
  - Operating temperature: –5 to +55 degrees Celsius (+23 to +113 degrees Fahrenheit)
  - Operating humidity: 5 to 95%, noncondensing
  - Power consumption: 35.00 W, 0.73 A at –48 V, 119.5 BTU/hr
- Dimensions
  - Height: 12.650 in. (321.3 mm)
  - Width: 0.716 in. (18.2 mm)
  - Depth: 9.000 in. (228.6 mm)
  - Depth with backplane connector: 9.250 in. (235 mm)

- Weight not including clam shell: 3.1 lb (1.3 kg)

B.5.2 MXP_2.5G_10G Card Specifications

The MXP_2.5G_10G card has the following specifications:

- Line (trunk side)
  - Bit rate:

    9.95328 Gbps for OC-192/STM-64

    10.70923 Gbps with ITU-T G.709 Digital Wrapper/FEC
  - Code: Scrambled NRZ
  - Fiber: 1550-nm single-mode
  - Maximum chromatic dispersion allowance: 1000 ps/nm
  - Loopback modes: Terminal and facility

Caution You must use a 20-dB fiber attenuator (15 to 25 dB) when working with the MXP_2.5G_10G card in a loopback on the trunk port. Do not use direct fiber loopbacks with the MXP_2.5G_10G card. Using direct fiber loopbacks causes irreparable damage to the MXP_2.5G_10G card.

  - Connectors: LC
  - Compliance: Telcordia GR-253-CORE, ITU-T G.707, ITU-T G.691
- Transmitter (trunk side)
  - Maximum transmitter output power: +3 dBm
  - Minimum transmitter output power: –16 dBm
    (The optical output power on the trunk side is configurable from –16 to +3 dBm with an accuracy of +/–0.5 dB.)
  - Transmitter: Lithium Niobate (LN) external modulator transmitter
  - Wavelength stability (drift): +/- 25 picometers (pm)

Note An optical device on the card keeps the laser wavelength locked as closely as possible to the ITU nominal value. The allowed drift is +/- 25 pm.

- Receiver (trunk side)
  - Receiver input power (no FEC, unamplified, 23 dB OSNR, BER 1 * 10 exp – 12): –8 to –21 dBm
  - Receiver input power (no FEC, unamplified, 23 dB OSNR, @ +/– 1000 ps/nm BER 1 * 10 exp – 12): –8 to –19 dBm
  - Receiver input power (no FEC, amplified, 19 dB OSNR, BER 1 * 10 exp – 12): –8 to –20 dBm
  - Receiver input power (no FEC, amplified, 19 dB OSNR, @ +/– 1000 ps/nm BER 1 * 10 exp – 12):–8 to –18 dBm
  - Receiver input power (FEC, unamplified, 23 dB OSNR, BER 8 * 10 exp – 5): –8 to –24 dBm

  - Receiver input power (FEC, unamplified, 23 dB OSNR, @ +/– 1000 ps/nm, BER 8 * 10 exp – 5): –8 to –22 dBm
  - Receiver input power (FEC, amplified, 9 dB OSNR, BER 8 * 10 exp – 5): –8 to –18 dBm
  - Receiver input power (FEC, unamplified, 11 dB OSNR, @ +/– 800 ps/nm, BER 8 * 10 exp – 5): –8 to –18 dBm
- Line (client side)
  - Bit rate: 2.48832 Gbps
  - Code: Scrambled NRZ
  - Fiber: 1550-nm single-mode
  - Maximum chromatic dispersion allowance: Compliant with SR-1 specification for OC-192. In the case of 10 GE, allowance is up to 10km of SMF fiber of dispersion.
  - Loopback modes: Terminal and facility
  - Connectors: LC
  - Compliance: Telcordia GR-253-CORE, ITU-T G.707, ITU-T G.957
- Transmitter (client side)
  - Depends on SFP that is used. There are two SFPs available: 15454-SFP-OC48-IR (1310 nm for OC48/DV6000, intermediate reach) and ONS-SE-2G-S1 (1310 nm for OC48/STM-16, short reach). See the "14.13 SFP Modules" section on page 14-123 and the document titled "Installing GBIC, SFP and XFP Optics Modules in Cisco ONS 15454, 15327, 15600, and 15310 Platforms" for more details.
- Receiver (client side)
  - Depends on SFP that is used. There are two SFPs available: 15454-SFP-OC48-IR (1310 nm for OC48/DV6000, intermediate reach) and ONS-SE-2G-S1 (1310 nm for OC48/STM-16, short reach). See the "14.13 SFP Modules" section on page 14-123 and the document titled "Installing GBIC, SFP and XFP Optics Modules in Cisco ONS 15454, 15327, 15600, and 15310 Platforms" for more details.
- Environmental
  - Operating temperature: –5 to +55 degrees Celsius (+23 to +113 degrees Fahrenheit)
  - Operating humidity: 5 to 95%, noncondensing
  - Power consumption: 50.00 W, 1.04 A at –48 V, 170.7 BTU/hr
- Dimensions
  - Height: 12.650 in. (321.3 mm)
  - Width: 0.716 in. (18.2 mm)
  - Depth: 9.000 in. (228.6 mm)
  - Depth with backplane connector: 9.250 in. (235 mm)
  - Weight not including clam shell: 3.1 lb (1.3 kg)
- Compliance
  - For compliance information, refer to the *Cisco Optical Transport Products Safety and Compliance Information*.

B.5.3 TXP_MR_2.5G and TXPP_MR_2.5G Card Specifications

The TXP_MR_2.5G and TXPP_MR_2.5G cards have the following specifications:

- Line (trunk side)
  - Bit rate:

    2.488 Gbps for OC-48/STM-16

    2.66 Gbps with ITU-T G.709 Digital Wrapper/FEC
  - Code: Scrambled NRZ
  - Fiber: 1550-nm single-mode
  - Maximum chromatic dispersion allowance: 6000 ps/nm
  - Loopback modes: Terminal and facility

Caution You must use a 20-dB fiber attenuator (15 to 25 dB) when working with the TXP_MR_2.5G and TXPP_MR_2.5G cards in a loopback on the trunk port. Do not use direct fiber loopbacks with the TXP_MR_2.5G and TXPP_MR_2.5G cards. Using direct fiber loopbacks causes irreparable damage to the TXP_MR_2.5G and TXPP_MR_2.5G cards.

  - Connectors: LC
  - Compliance: Telcordia GR-253-CORE, ITU-T G.707, ITU-T G.957
- Transmitter (trunk side)
  - Maximum transmitter output power: +1 dBm
  - Minimum transmitter output power: –4.5 dBm
  - Transmitter: Direct modulated laser
  - Wavelength stability (drift): +/- 25 picometers (pm)

Note An optical device on the card keeps the laser wavelength locked as closely as possible to the ITU nominal value. The allowed drift is +/- 25 pm.

- Currently available wavelengths of TXP_MR_2.5G and TXPP_MR_2.5G:

  ITU grid blue band: 1530.334 to 1544.526 nm

  ITU grid red band: 1546.119 to 1560.606 nm
- Receiver (trunk side)
  - Receiver input power (no FEC, unamplified, BER 1 * 10 exp – 12): –9 to –30 dBm
  - Receiver input power (FEC, unamplified, BER 1 * 10 exp – 6): –9 to –31 dBm
  - Receiver input power (no FEC, amplified, BER 1 * 10 exp – 12): –9 to –23 dBm
  - Receiver input power (FEC, amplified, BER 1 * 10 exp – 6): –9 to –25 dBm
  - Receiver: APD
  - Link loss budget: 24 dB minimum, with no dispersion or 22 dB optical path loss at BER = 1 * 10 exp – 12 including dispersion
  - Receiver input wavelength range: 1290 to 1605 nm

- Line (client side)
  - Bit rate: 8 Mbps to 2.488 Gbps
  - Code: Scrambled NRZ
  - Fiber: 1310-nm single-mode
  - Maximum chromatic dispersion allowance: 1600 ps/nm
  - Loopback modes: Terminal and facility
  - Connectors: LC
  - Compliance: Telcordia GR-253-CORE, ITU-T G.707, ITU-T G.957
- Transmitter (client side)
  - Depends on SFP that is used. There are 13 SFPs available: 15454-SFP3-1-IR, 15454E-SFP-L.1.1, 15454-SFP12-4-IR, 15454E-SFP-L.4.1, 15454-SFP-OC48-IR, 15454E-SFP-L.16.1, ONS-SE-2G-S1, 15454-SFP-200, 15454E-SFP-200, 15454-SFP-GEFC-SX, 15454E-SFP-GEFC-S, 15454-SFP-GE+-LX, and 15454E-SFP-GE+-LX. See the "14.13 SFP Modules" section on page 14-123 and the document titled "Installing GBIC, SFP and XFP Optics Modules in Cisco ONS 15454, 15327, 15600, and 15310 Platforms" for more details and specifications.
- Receiver (client side)
  - Depends on SFP that is used. There are 13 SFPs available: 15454-SFP3-1-IR, 15454E-SFP-L.1.1, 15454-SFP12-4-IR, 15454E-SFP-L.4.1, 15454-SFP-OC48-IR, 15454E-SFP-L.16.1, ONS-SE-2G-S1, 15454-SFP-200, 15454E-SFP-200, 15454-SFP-GEFC-SX, 15454E-SFP-GEFC-S, 15454-SFP-GE+-LX, and 15454E-SFP-GE+-LX. See the "14.13 SFP Modules" section on page 14-123 and the document titled "Installing GBIC, SFP and XFP Optics Modules in Cisco ONS 15454, 15327, 15600, and 15310 Platforms" for more details and specifications.
- Environmental
  - Operating temperature: –5 to +45 degrees Celsius (+23 to +113 degrees Fahrenheit)
  - Operating humidity: 5 to 95%, noncondensing
  - Power consumption: 35.00 W, 0.73 A at –48 V, 119.5 BTU/hr
- Dimensions
  - Height: 12.650 in. (321.3 mm)
  - Width: 0.716 in. (18.2 mm)
  - Depth: 9.000 in. (228.6 mm)
  - Depth with backplane connector: 9.250 in. (235 mm)
  - Weight not including clam shell: 3.1 lb (1.3 kg)

B.5.4 MXP_MR_2.5G and MXPP_MR_2.5G Card Specifications

The MXP_MR_2.5G and MXPP_MR_2.5G cards have the following specifications:

- Payload configuration
  - 2xGE or 2xFC
  - 1x2G FC

  - Mixed configurations up to maximum line rate (for example, if you have a port configured for 2G FC, you cannot use another port at the same time)
- Client ports: 8x SFP
- Performance monitoring (PM) for all interfaces
- Buffer-to-buffer credit management for distance extension
- Line (trunk side)
  - Bit rate: 2.488 Gbps for OC-48/STM-16
  - Code: Scrambled NRZ
  - Fiber: 1550-nm single-mode
  - Maximum chromatic dispersion allowance: 6000 ps/nm
  - Loopback modes: Terminal and facility

Caution You must use a 20-dB fiber attenuator (15 to 25 dB) when working with the MXP_MR_2.5G and MXPP_MR_2.5G cards in a loopback on the trunk port. Do not use direct fiber loopbacks with the MXP_MR_2.5G and MXPP_MR_2.5G cards. Using direct fiber loopbacks causes irreparable damage to the MXP_MR_2.5G and MXPP_MR_2.5G cards.

  - Connectors: LC
  - Compliance: Telcordia GR-253-CORE, Telcordia GR-2918-CORE, Issue 2, ITU-T G.957, and ITU-T 100-GHz grid standard G.692
- Transmitter (trunk side)
  - Transmit power: +3 +/–1 dBm with MXP_MR_2.5G card, and +/–1 dBm with MXPP_MR_2.5G card
  - 50-GHz DWDM migration ready (the wavelength deviation is less than +/–0.040 nm through wavelocker deployment)
  - Four-channel wavelength tunability at 100-GHz spacing
  - Transmitter maximum return reflectance: –27 dB
  - Chromatic dispersion allowance: 5400 ps/nm, giving an optical power penalty < 2.0 dB
  - Minimum side mode suppression ratio: 30 dB
  - Transmitter is a direct modulated laser
  - Wavelength stability (drift): +/- 25 picometers (pm)

Note An optical device on the card keeps the laser wavelength locked as closely as possible to the ITU nominal value. The allowed drift is +/- 25 pm.

- Currently available wavelengths of the TXP_MR_2.5G and TXPP_MR_2.5G cards:

  ITU grid blue band: 1530.334 to 1544.526 nm

  ITU grid red band: 1546.119 to 1560.606 nm
- Receiver (trunk side)
  - Receiver sensitivity –28 dBm, BER 1 * 10 exp – 12
  - Receiver overload is equal to or exceeds –8 dBm

  - Receiver maximum reflectance of –27 dB
- Line (client side)
  - Bit rate: 1.06 Gbps to 2.125 Gbps per client
  - Code: Scrambled NRZ
  - Fiber: 1310-nm single-mode or 850-nm multimode
  - Maximum chromatic dispersion allowance: 1600 ps/nm
  - Loopback modes: Terminal and facility
  - Connectors: LC
  - Compliance: Telcordia GR-253-CORE, ITU-T G.707, ITU-T G.957
- Transmitter (client side)
  - Depends on SFP that is used. There are four SFPs available: 15454-SFP-GE+-LX, 15454E-SFP-GE+-LX, 15454-SFP-GEFC-SX, and 15454E-SFP-GEFC-S. See the "14.13 SFP Modules" section on page 14-123 and the document titled "Installing GBIC, SFP and XFP Optics Modules in Cisco ONS 15454, 15327, 15600, and 15310 Platforms" for more details and specifications.
- Receiver (client side)
  - Depends on SFP that is used. There are four SFPs available: 15454-SFP-GE+-LX, 15454E-SFP-GE+-LX, 15454-SFP-GEFC-SX, and 15454E-SFP-GEFC-S. See the "14.13 SFP Modules" section on page 14-123 and the document titled "Installing GBIC, SFP and XFP Optics Modules in Cisco ONS 15454, 15327, 15600, and 15310 Platforms" for more details and specifications.
- Environmental
  - Operating temperature: –5 to +40 degrees Celsius (+23 to +104 degrees Fahrenheit)
  - Operating humidity: 5 to 85%, noncondensing
  - Power consumption (maximum): 60 W, 1.25 A at –48 V, 204 BTU/hr
- Dimensions
  - Height: 12.650 in. (321.3 mm)
  - Width: 0.716 in. (18.2 mm)
  - Depth: 9.000 in. (228.6 mm)
  - Depth with backplane connector: 9.250 in. (235 mm)
  - Weight not including clam shell: 2.25 lb (1.02 kg)

B.5.5 MXP_2.5G_10E Card Specifications

The MXP_2.5G_10E card has the following specifications:

- Line (trunk side)
  - Bit rate: 10.70923 Gbps (in ITU-T G.709 Digital Wrapper/FEC mode)
  - Code: Scrambled NRZ
  - Fiber: 1550-nm single-mode
  - Maximum chromatic dispersion allowance: +/–1200 ps/nm (specified penalty)

  - Loopback modes: Terminal and facility

Caution You must use a 20-dB fiber attenuator (15 to 25 dB) when working with the MXP_2.5G_10E card in a loopback on the trunk port. Do not use direct fiber loopbacks with the MXP_2.5G_10E card. Using direct fiber loopbacks causes irreparable damage to the MXP_2.5G_10E card.

  - Connectors: LC
  - Compliance: ITU-T G.707, ITU-T G.709, ITU-T G.957, and Telcordia GR-253-CORE
- Transmitter (trunk side)
  - Maximum transmitter output power: +6 dBm
  - Minimum transmitter output power: +3 dBm
  - Transmitter: LN external modulator transmitter
  - Wavelength stability (drift): +/- 25 picometers (pm)

Note An optical device on the card keeps the laser wavelength locked as closely as possible to the ITU nominal value. The allowed drift is +/- 25 pm.

- Currently available wavelengths and versions of MXP_2.5G_10E:

  ITU grid blue band:
  - 1530.33 to 1533.07 nm
  - 1534.25 to 1537.00 nm
  - 1538.19 to 1540.95 nm
  - 1542.14 to 1544.92 nm

  ITU grid red band:
  - 1546.12 to 1548.92 nm
  - 1550.12 to 1552.93 nm
  - 1554.13 to 1556.96 nm
  - 1558.17 to 1561.01 nm
- Receiver (trunk side)
  - Receiver input power (no FEC, unamplified, BER 1 * 10 exp – 12): –8 to –22 dBm
  - Receiver input power (FEC, unamplified, BER 1 * 10 exp – 6): –8 to –26 dBm
  - Receiver input power (no FEC, amplified, BER 1 * 10 exp – 12): –8 to –20 dBm
  - Receiver input power (FEC, amplified, BER 1 * 10 exp – 6): –8 to –18 dBm
  - Receiver: APD
  - Link loss budget: 24 dB minimum, with no dispersion or 22 dB optical path loss at BER = 1 * 10 exp – 12 including dispersion
  - Receiver input wavelength range: 1290 to 1605 nm
- Line (client side)
  - Bit rate: 2.5 Gbps per port (OC-48/STM-16)
  - Code: Scrambled NRZ

  - Fiber: 1310-nm single-mode
  - Maximum chromatic dispersion allowance: 12 ps/nm (SR SFP version)
  - Loopback modes: Terminal and facility
  - Connectors: LC (optical)
  - Compliance: Telcordia GR-253-CORE, ITU-T G.707, ITU-T G.957
- Transmitter (client side)
  - Depends on the SFP that is used.
- Receiver (client side)
  - Depends on the SFP that is used.
- Environmental
  - Operating temperature: –5 to +55 degrees Celsius (+23 to +113 degrees Fahrenheit)
  - Operating humidity: 5 to 95%, noncondensing
  - Power consumption: 50.00 W (maximum), 1.11 A at –48 V, 136.6 BTU/hr
- Dimensions
  - Height: 12.650 in. (321.3 mm)
  - Width: 0.716 in. (18.2 mm)
  - Depth: 9.000 in. (228.6 mm)
  - Depth with backplane connector: 9.250 in. (235 mm)
  - Weight not including clam shell: 3.1 lb (1.3 kg)

B.5.6 TXP_MR_10E Card Specifications

The TXP_MR_10E card has the following specifications:

- Line (trunk side)
  - Bit rate: OC-192/STM-64 (9.95328 Gbps), OTU2 (10.70923 Gbps), 10GE (10.3125 Gbps), 10GE into OTU2 (non-standard 11.0957 Gbps), 10G FC (10.51875 Gbps), or 10G FC into OTU2 (non-standard 11.31764 Gbps).
  - Code: Scrambled NRZ
  - Fiber: 1550-nm single-mode
  - Maximum chromatic dispersion allowance: +/–1200 ps/nm (specified penalty)
  - Loopback modes: Terminal and facility

Caution You must use a 15-dB fiber attenuator (10 to 20 dB) when working with the TXP_MR_10E card in a loopback on the trunk port. Do not use direct fiber loopbacks with the TXP_MR_10E card. Using direct fiber loopbacks causes irreparable damage to the TXP_MR_10E card.

  - Connectors: LC
  - Compliance: Telcordia GR-253-CORE, ITU-T G.707, ITU-T G.957, and ITU-T G.709
- Transmitter (trunk side)

  - Maximum transmitter output power: +6 dBm
  - Minimum transmitter output power: +3 dBm
  - Transmitter: LN external modulator transmitter
  - Wavelength stability (drift): +/- 25 picometers (pm)

Note An optical device on the card keeps the laser wavelength locked as closely as possible to the ITU nominal value. The allowed drift is +/- 25 pm.

- Currently available wavelengths and versions of TXP_MR_10E:

  ITU grid blue band:
  - 1530.33 to 1533.07 nm
  - 1534.25 to 1537.00 nm
  - 1538.19 to 1540.95 nm
  - 1542.14 to 1544.92 nm

  ITU grid red band:
  - 1546.12 to 1548.92 nm
  - 1550.12 to 1552.93 nm
  - 1554.13 to 1556.96 nm
  - 1558.17 to 1561.01 nm
- Receiver (trunk side)
  - Receiver input power (no FEC, unamplified, BER 1 * 10 exp – 12): –8 to –22 dBm
  - Receiver input power (FEC, unamplified, BER 1 * 10 exp – 6): –8 to –26 dBm
  - Receiver input power (no FEC, amplified, BER 1 * 10 exp – 12): –8 to –20 dBm
  - Receiver input power (FEC, amplified, BER 1 * 10 exp – 6): –8 to –18 dBm
  - Receiver: APD
  - Link loss budget: 24 dB minimum, with no dispersion or 22 dB optical path loss at BER = 1 * 10 exp – 12 including dispersion
  - Receiver input wavelength range: 1290 to 1605 nm
- Line (client side) - XFP-based SR
  - XFP-based SR
  - Bit rate: 10GE (10.3125 Gbps), 10G FC (10.51875 Gbps), or STM-64/OC-192
  - Code: Scrambled NRZ
  - Fiber: 1310-nm single-mode
  - Maximum chromatic dispersion allowance: 6.6 ps/nm
  - Loopback modes: Terminal and facility
  - Connectors: LC
  - Compliance: Telcordia GR-253-CORE, ITU-T G.707, ITU-T G.957, ITU-T G.691
- Transmitter (client side)
  - Maximum transmitter output power: –1 dBm

  - Minimum transmitter output power: –6 dBm
  - Center wavelength: 1290 to 1330 nm
  - Nominal wavelength: 1310 nm
  - Transmitter: DFB laser
- Receiver (client side)
  - Maximum receiver level: –1 dBm at BER 1 * 10 exp – 12
  - Minimum receiver level: –14 dBm at BER 1 * 10 exp – 12
  - Receiver: APD
  - Link loss budget: 8 dB minimum, at BER = 1 * 10 exp – 12
  - Receiver input wavelength range: 1290 to 1605 nm
- Environmental
  - Operating temperature: –5 to +55 degrees Celsius (+23 to +113 degrees Fahrenheit)
  - Operating humidity: 5 to 95%, noncondensing
  - Power consumption: 50.00 W (maximum), 1.11 A at –48 V, 136.6 BTU/hr
- Dimensions
  - Height: 12.650 in. (321.3 mm)
  - Width: 0.716 in. (18.2 mm)
  - Depth: 9.000 in. (228.6 mm)
  - Depth with backplane connector: 9.250 in. (235 mm)
  - Weight not including clam shell: 3.1 lb (1.3 kg)

B.6 SFP Specifications

Table B-17 lists the specifications for available SFPs.

Table B-17 SFP Specifications

SFP	Interface	Transmitter Output Power Min/Max (dBm)	Receiver Input Power Min/Max (dBm)
15454-SFP3-1-IR=	OC-3	–15 to –8	–23 to –8
15454E-SFP-L.1.1=	STM-1	–15 to –8	–34 to –10
15454-SFP12-4-IR=	OC-12, D1 Video	–15 to –8	–28 to –7
15454E-SFP-L.4.1=	STM-4, D1 Video	–15 to –8	–28 to –8
15454-SFP-OC48-IR=	OC-48, DV6000 (C-Cor)	–5 to +0	–18 to +0
ONS-SE-2G-S1=	OC-48, STM-16	–10 to –3	–18 to –3
15454E-SFP-L.16.1=	STM-16, DV6000 (C-Cor)	–5 to +0	–18 to +0
15454-SFP-200/ 15454E-SFP-200	ESCON	–8 to –4	–28 to –3

Table B-17 SFP Specifications (continued)

SFP	Interface	Transmitter Output Power Min/Max (dBm)	Receiver Input Power Min/Max (dBm)
15454-SFP-GEFC-SX=/ 15454E-SFP-GEFC-S=	Fibre Channel (1 and 2 Gbps), FICON, GE	–10 to –3.5	–17 to 0 (1FC and 1GE) –15 to 0 (2FC)
15454-SFP-GE+-LX=/ 15454E-SFP-GE+-LX=	Fibre Channel (1 and 2 Gbps), FICON, GE, HDTV	–9.5 to –3.0	–20 to –3 (1FC, 1GE, and 2FC)

SFP Port Cabling Specifications

Table B-18 provides cabling specifications for the single-mode fiber (SMF) SFPs and Table B-19 provides cabling specifications for multimode fiber (MMF) SFPs that you install into Ethernet cards. The ports of the listed SFPs have LC-type connectors.

Table B-18 Single-Mode Fiber SFP Port Cabling Specifications

SFP	Wavelength[1]	Fiber Type	Cable Distance
15454-SFP3-1-IR= Intermediate Reach	1310 nm	9 micron SMF	15 km (9.3 miles)
15454E-SFP-L.1.1= Short Haul	1310 nm	9 micron SMF	15 km (9.3 miles)
15454-SFP12-4-IR= Intermediate Reach	1310 nm	9 micron SMF	15 km (9.3 miles)
15454E-SFP-L.4.1= Short Haul	1310 nm	9 micron SMF	15 km (9.3 miles)
15454-SFP-OC48-IR= Intermediate Reach	1310 nm	9 micron SMF	15 km (9.3 miles)
ONS-SE-2G-S1= Short Reach	1310 nm	9 micron SMF	2 km (1.2 miles)
15454E-SFP-L.16.1= Short Haul	1310 nm	9 micron SMF	15 km (9.3 miles)
15454-SFP-GE+-LX=/ 15454E-SFP-GE+-LX= Long Reach	1310 nm	9 micron SMF	10 km (6.2 miles) for FC 1G, FC 2G, and GE 5 km (3.1 miles) for HDTV

1. Typical loss on a 1310 nm wavelength is 0.6 dB/km.

Table B-19 Multimode Fiber SFP Port Cabling Specifications

SFP	Wavelength	Fiber Type	Cable Distance
15454-SFP-200/ 15454E-SFP-200 Long Reach	1310 nm	62.5 micron MMF	2 km (1.2 miles)
15454-SFP-GEFC-SX/ 15454E-SFP-GEFC-S Short Reach	850 nm	62.5 micron MMF	300 m (984 ft) for FC 1 Gbps and 1.2 Gbps GE 150 m (492 ft) for FC 2 Gbps
		50.0 micron MMF	550 m (1804 ft) for FC 1 Gbps and 1.2 Gbps GE 300 m (984 ft) for FC 2 Gbps

DWDM Enhanced State Model

This appendix describes the state model for Cisco ONS 15454 dense wavelength division multiplexing (DWDM) cards, optical payload ports, out-of-band optical supervision channel (OSC) ports, optical channel network connections (OCHNC), and transponder/muxponder cards and ports. Software Release 4.7 states are based on the generic state model defined in Telcordia GR-1093 Core, Issue 2 and ITU-T X.731.

C.1 Service States

Service states include a Primary State (PST), a Primary State Qualifier (PSTQ), and one or more Secondary States (SST). Table C-1 lists the ANSI and ETSI service state PSTs and PSTQs supported by the ONS 15454.

Table C-1 ONS 15454 Service State Primary States and Primary State Qualifiers

ANSI Primary State, Primary State Qualifier	ETSI Primary State, Primary State Qualifier	Definition
IS-NR (In-Service and Normal)	Unlocked-enabled	The entity is fully operational and will perform as provisioned.
OOS-AU (Out-of-Service and Autonomous)	Unlocked-disabled	The entity is not operational because of an autonomous event.
OOS-AUMA (Out-of-Service and Autonomous Management)	Locked-disabled	The entity is not operational because of an autonomous event and has also been manually removed from service.
OOS-MA (Out-of-Service and Management)	Locked-enabled	The entity has been manually removed from service.

Table C-2 defines the ANSI and ETSI SSTs supported by the ONS 15454.

Table C-2 ONS 15454 Secondary States

ANSI Secondary State	ETSI Secondary State	Definition
AINS	automaticInService	The entity is delayed before transitioning to the IS-NR (ANSI)/Unlocked-enabled (ETSI) service state. The transition to IS-NR/Unlocked-enabled depends on correction of conditions. Alarm reporting is suppressed, but traffic is carried. Raised fault conditions, whether or not their alarms are reported, can be retrieved on the CTC Conditions tab or by using the TL1 RTRV-COND command.
DSBLD	disabled	The entity was manually removed from service and does not provide its provisioned functions. All services are disrupted; unable to carry traffic.
MEA	mismatchOfEquipment	An improper card is installed. For example, an installed card is not compatible with the card pre-provisioning or the slot. This SST applies only to cards.
MT	maintenance	The entity has been manually removed from service for a maintenance activity but still performs its provisioned functions. Alarm reporting is suppressed, but traffic is carried. Raised fault conditions, whether or not their alarms are reported, can be retrieved on the CTC Conditions tab or by using the TL1 RTRV-COND command.
SWDL	softwareDownload	The card is involved in a software and database download. This SST applies only to cards.
UAS	unassigned	The card is not provisioned in the database. This SST applies only to cards.
UEQ (Unequipped)	notInstalled	The card is not physically present (that is, an empty slot). This SST applies only to cards.

C.2 Administrative States

Administrative states are used to manage service states. Administrative states consist of a PST and an SST. Table C-3 lists the ANSI and ETSI administrative states supported by the ONS 15454. See Table C-2 on page C-2 for SST definitions.

Note A change in the administrative state of an entity does not change the service state of supporting or supported entities.

Table C-3 Cisco ONS 15454 Administrative States

ANSI Administrative State (PST,SST)	ETSI Administrative State (PST,SST)	Definition
IS	Unlocked	Puts the entity in-service.
IS,AINS	Unlocked,automaticInService	Puts the entity in automatic in-service.
OOS,DSBLD	Locked,disabled	Removes the entity from service and disables it.
OOS,MT	Locked,maintenance	Removes the entity from service for maintenance.

C.3 Service State Transitions

This section describes the transition from one service state to the next state for DWDM cards, optical payload ports, OSC ports, OCHNCs, and transponder/muxponder cards and ports. A service state transition is based on the action performed on the entity and any autonomous activity.

C.3.1 DWDM Card Service State Transitions

Table C-4 lists ANSI and ETSI service state transitions for AD-1B-xx.x, AD-4B-xx.x, AD-1C-xx.x, AD-2C-xx.x, AD-4C-xx.x, OSC-CSM, OSCM, OPT-BST, OPT-PRE, 4MD-xx.x, 32MUX-O, and 32DMX-O cards.

Table C-4 Cisco ONS 15454 Optical Unit Service State Transitions

Current Service State	Action	Next Service State
IS-NR (ANSI) Unlocked-enabled (ETSI)	Delete the card.	OOS-AUMA,UAS (ANSI) Locked-disabled,unassigned (ETSI)
	Pull the card.	OOS-AU,UEQ (ANSI) Unlocked-disabled,notInstalled (ETSI)
	Reset the card.	OOS-AU,SWDL (ANSI) Unlocked-disabled,softwareDownload (ETSI)
OOS-AU,AINS & MEA (ANSI) Unlocked-disabled,automaticInService & mismatchOfEquipment (ETSI)	Pull the card.	OOS-AU,AINS & UEQ (ANSI) Unlocked-disabled,automaticInService & notInstalled (ETSI)
	Delete the card.	If the card is valid: • OOS-AUMA,UAS (ANSI) • Locked-disabled,unassigned (ETSI) If the card is invalid: • OOS-AUMA,MEA & UAS (ANSI) • Locked-disabled,mismatchOfEquipment & unassigned (ETSI)
OOS-AU,AINS & SWDL (ANSI) Unlocked-disabled,automaticInService & softwareDownload (ETSI)	Restart completed.	IS-NR (ANSI) Unlocked-enabled (ETSI)
	Pull the card.	OOS-AU,AINS & UEQ (ANSI) Unlocked-disabled,automaticInService & notInstalled (ETSI)

Table C-4 Cisco ONS 15454 Optical Unit Service State Transitions (continued)

Current Service State	Action	Next Service State
OOS-AU,AINS & UEQ (ANSI) Unlocked-disabled,automaticInService & notInstalled (ETSI)	Insert a valid card.	OOS-AU,AINS & SWDL (ANSI) Unlocked-disabled,automaticInService & softwareDownload (ETSI)
	Insert an invalid card.	OOS-AU,AINS & MEA (ANSI) Unlocked-disabled,automaticInService & mismatchOfEquipment (ETSI)
	Delete the card.	OOS-AUMA,UAS & UEQ (ANSI) Locked-disabled,unassigned & notInstalled (ETSI)
OOS-AU,MEA (ANSI) Unlocked-disabled,mismatchOfEquipment (ETSI)	Pull the card.	OOS-AU,UEQ (ANSI) Unlocked-disabled,notInstalled (ETSI)
	Delete the card.	If the card is valid: • OOS-AUMA,UAS (ANSI) • Locked-disabled,unassigned (ETSI) If the card is invalid: • OOS-AUMA,MEA & UAS (ANSI) • Locked-disabled,mismatchOfEquipment & unassigned (ETSI)
OOS-AU,SWDL (ANSI) Unlocked-disabled,softwareDownload (ETSI)	Restart completed.	IS-NR (ANSI) Unlocked-enabled (ETSI)
	Pull the card.	OOS-AU,UEQ (ANSI) Unlocked-disabled,notInstalled (ETSI)
OOS-AU,UEQ (ANSI) Unlocked-disabled,notInstalled (ETSI)	Insert a valid card.	OOS-AU,SWDL (ANSI) Unlocked-disabled,softwareDownload (ETSI)
	Insert an invalid card.	OOS-AU,MEA (ANSI) Unlocked-disabled,mismatchOfEquipment (ETSI)
	Delete the card.	OOS-AUMA,UAS & UEQ (ANSI) Locked-disabled,unassigned & notInstalled (ETSI)
OOS-AUMA,MEA & UAS (ANSI) Locked-disabled,mismatchOfEquipment & unassigned (ETSI)	Pull the card.	OOS-AUMA,UAS & UEQ (ANSI) Locked-disabled,unassigned & notInstalled (ETSI)
	Provision the card.	OOS-AU,MEA (ANSI) Unlocked-disabled,mismatchOfEquipment (ETSI)
OOS-AUMA,MT & SWDL (ANSI) Locked-disabled,maintenance & softwareDownload (ETSI)	Restart completed.	OOS-MA,MT (ANSI) Locked-enabled,maintenance (ETSI)
	Pull the card.	OOS-AUMA,MT & UEQ (ANSI) Locked-disabled,maintenance & notInstalled (ETSI)

Table C-4 Cisco ONS 15454 Optical Unit Service State Transitions (continued)

Current Service State	Action	Next Service State
OOS-AUMA,UAS (ANSI) Locked-disabled,unassigned (ETSI)	Pull the card.	OOS-AUMA,UAS & UEQ (ANSI) Locked-disabled,unassigned & notInstalled (ETSI)
	Provision an invalid card.	OOS-AU,MEA (ANSI) Unlocked-disabled,mismatchOfEquipment (ETSI)
	Provision a valid card.	OOS-AU,SWDL (ANSI) Unlocked-disabled,softwareDownload (ETSI)
OOS-AUMA,UAS & UEQ (ANSI) Locked-disabled,unassigned & notInstalled (ETSI)	Insert a valid card.	OOS-AU,SWDL (ANSI) Unlocked-disabled,softwareDownload (ETSI)
	Insert an invalid card.	OOS-AUMA,MEA & UAS (ANSI) Locked-disabled,mismatchOfEquipment & unassigned (ETSI)
	Pre-provision a card.	OOS-AU,AINS & UEQ (ANSI) Unlocked-disabled,automaticInService & notInstalled (ETSI)

C.3.2 Optical Payload Port Service State Transitions

Table C-5 lists the ANSI and ETSI optical payload port service state transitions.

Table C-5 Cisco ONS 15454 Optical Payload Port Service State Transitions

Current Service State	Action	Next Service State
IS-NR (ANSI) Unlocked-enabled (ETSI)	Put the port in the OOS,DSBLD administrative state.	OOS-MA,DSBLD (ANSI) Locked-enabled,disabled (ETSI)
	The OCHNC end-to-end path no longer exists.	OOS-AU,AINS (ANSI) Unlocked-disabled,automaticInService (ETSI)
OOS-AU,AINS (ANSI) Unlocked-disabled,automaticInService (ETSI)	All required OCHNC connections exist.	IS-NR (ANSI) Unlocked-enabled (ETSI)
	Put the port in the OOS,MT administrative state.	OOS-MA,MT (ANSI) Locked-enabled,maintenance (ETSI)
	Put the port in the OOS,DSBLD.	OOS-MA,DSBLD (ANSI) Locked-enabled,disabled (ETSI)
OOS-MA,DSBLD (ANSI) Locked-enabled,disabled (ETSI)	Put the port in the IS,AINS administrative state.	OOS-AU,AINS (ANSI) Unlocked-disabled,automaticInService (ETSI)
	Put the port in the OOS,MT.	OOS-MA,MT (ANSI) Locked-enabled,maintenance (ETSI)

Table C-5 Cisco ONS 15454 Optical Payload Port Service State Transitions (continued)

Current Service State	Action	Next Service State
OOS-MA,MT (ANSI) Locked-enabled,maintenance (ETSI)	Put the port in the IS,AINS administrative state.	OOS-AU,AINS (ANSI) Unlocked-disabled,automaticInService (ETSI)
	Put the port in the OOS,DSBLD administrative state.	OOS-MA,DSBLD (ANSI) Locked-enabled,disabled (ETSI)

C.3.3 OSC Port Service State Transitions

Table C-6 lists the ANSI and ETSI OSC port service state transitions.

Table C-6 Cisco ONS 15454 OSC Port Service State Transitions

Current Service State	Action	Next Service State
IS-NR (ANSI) Unlocked-enabled (ETSI)	Delete the OSC.	OOS-AU,AINS (ANSI) Unlocked-disabled,automaticInService (ETSI)
OOS-AU,AINS (ANSI) Unlocked-disabled,automaticInService (ETSI)	Create the OSC.	IS-NR (ANSI) Unlocked-enabled (ETSI)
	Put the port in the OOS,MT administrative state.	OOS-MA,MT (ANSI) Locked-enabled,maintenance (ETSI)
OOS-MA,MT (ANSI) Locked-enabled,maintenance (ETSI)	Put the port in the IS,AINS administrative state.	OOS-AU,AINS (ANSI) Unlocked-disabled,automaticInService (ETSI)

C.3.4 OCHNC Service State Transitions

Table C-7 lists the ANSI and ETSI OCHNC service state transitions.

Table C-7 Cisco ONS 15454 OCHNC Service State Transitions

Current Service State	Action	Next Service State
IS-NR (ANSI) Unlocked-enabled (ETSI)	Put the connection in the OOS,MT administrative state.	OOS-MA,MT (ANSI) Locked-enabled,maintenance (ETSI)
	Put the connection in the IS,AINS administrative state.	OOS-AU,AINS (ANSI) Unlocked-disabled,automaticInService (ETSI)

Table C-7 Cisco ONS 15454 OCHNC Service State Transitions (continued)

Current Service State	Action	Next Service State
OOS-AU,AINS (ANSI) Unlocked-disabled,automaticInService (ETSI)	Put the connection in the IS administrative state.	IS-NR (ANSI) Unlocked-enabled (ETSI)
OOS-MA,DSBLD (ANSI) Locked-enabled,disabled (ETSI)	Put the connection in the IS,AINS administrative state.	OOS-AU,AINS (ANSI) Unlocked-disabled,automaticInService (ETSI)

C.3.5 Transponder/Muxponder Card Service State Transitions

Table C-4 lists ANSI and ETSI transponder and muxponder card service state transitions.

Table C-8 ONS 15454 Transponder/Muxponder Card Service State Transitions

Current Service State	Action	Next Service State
IS-NR (ANSI) Unlocked-enabled (ETSI)	Change the administrative state to OOS,MT.	OOS-MA,MT (ANSI) Locked-enabled,maintenance (ETSI)
	Delete the card.	OOS-AUMA,UAS (ANSI) Locked-disabled,unassigned (ETSI)
	Pull the card.	OOS-AU,UEQ (ANSI) Unlocked-disabled,notInstalled (ETSI)
	Reset the card.	OOS-AU,SWDL (ANSI) Unlocked-disabled,softwareDownload (ETSI)
OOS-AU,AINS & MEA (ANSI) Unlocked-disabled,automaticInService & mismatchOfEquipment (ETSI)	Change the administrative state to OOS,MT.	OOS-AUMA,MEA & MT (ANSI) Locked-disabled,mismatchOfEquipment & maintenance (ETSI)
	Pull the card.	OOS-AU,AINS & UEQ (ANSI) Unlocked-disabled,automaticInService & notInstalled (ETSI)
	Delete the card.	If the card is valid: • OOS-AUMA,UAS (ANSI) • Locked-disabled,unassigned (ETSI) If the card is invalid: • OOS-AUMA,MEA & UAS (ANSI) • Locked-disabled,mismatchOfEquipment & unassigned (ETSI)

Table C-8 ONS 15454 Transponder/Muxponder Card Service State Transitions (continued)

Current Service State	Action	Next Service State
OOS-AU,AINS & SWDL (ANSI) Unlocked-disabled,automaticInService & softwareDownload (ETSI)	Restart completed.	IS-NR (ANSI) Unlocked-enabled (ETSI)
	Pull the card.	OOS-AU,AINS & UEQ (ANSI) Unlocked-disabled,automaticInService & notInstalled (ETSI)
OOS-AU,AINS & UEQ (ANSI) Unlocked-disabled,automaticInService & notInstalled (ETSI)	Insert a valid card.	OOS-AU,AINS & SWDL (ANSI) Unlocked-disabled,automaticInService & softwareDownload (ETSI)
	Insert an invalid card.	OOS-AU,AINS & MEA (ANSI) Unlocked-disabled,automaticInService & mismatchOfEquipment (ETSI)
	Delete the card.	OOS-AUMA,UAS & UEQ (ANSI) Locked-disabled,unassigned & notInstalled (ETSI)
	Change the administrative state to OOS,MT.	OOS-AUMA,MT & UEQ (ANSI) Locked-disabled,maintenance & notInstalled (ETSI)
OOS-AU,MEA (ANSI)	Pull the card.	OOS-AU,UEQ (ANSI) Unlocked-disabled,notInstalled (ETSI)
	Delete the card.	If the card is valid: • OOS-AUMA,UAS (ANSI) • Locked-disabled,unassigned (ETSI) If the card is invalid: • OOS-AUMA,MEA & UAS (ANSI) • Locked-disabled,mismatchOfEquipment & unassigned (ETSI)
	Change the administrative state to OOS,MT.	OOS-AUMA,MT & UEQ (ANSI) Locked-disabled,maintenance & notInstalled (ETSI)
OOS-AU,SWDL (ANSI) Locked-disabled,softwareDownload (ETSI)	Restart completed.	IS-NR (ANSI) Unlocked-enabled (ETSI)
	Pull the card.	OOS-AU,UEQ (ANSI) Locked-disabled,notInstalled (ETSI)

Table C-8 ONS 15454 Transponder/Muxponder Card Service State Transitions (continued)

Current Service State	Action	Next Service State
OOS-AU,UEQ (ANSI) Locked-disabled,notInstalled (ETSI)	Insert a valid card.	OOS-AU,SWDL (ANSI) Locked-disabled,softwareDownload (ETSI)
	Insert an invalid card.	OOS-AU,MEA (ANSI) Locked-disabled,mismatchOfEquipment (ETSI)
	Delete the card.	OOS-AUMA,UAS & UEQ (ANSI) Locked-disabled,unassigned & notInstalled (ETSI)
	Change the administrative state to OOS,MT.	OOS-AUMA,MT & UEQ (ANSI) Locked-disabled,maintenance & notInstalled (ETSI)
OOS-AUMA,MEA & MT (ANSI) Locked-disabled,mismatchOfEquipment & maintenance (ETSI)	Change the administrative state to IS.	OOS-AU,MEA (ANSI) Locked-disabled,mismatchOfEquipment (ETSI)
	Pull the card.	OOS-AUMA,MT & UEQ (ANSI) Locked-disabled,maintenance & notInstalled (ETSI)
	Delete the card.	If the card is valid: • OOS-AUMA,UAS (ANSI) • Locked-disabled,unassigned (ETSI) If the card is invalid: • OOS-AUMA,MEA & UAS (ANSI) • Locked-disabled,mismatchOfEquipment & unassigned (ETSI)
OOS-AUMA,MEA & UAS (ANSI) Locked-disabled,mismatchOfEquipment & unassigned (ETSI)	Pull the card.	OOS-AUMA,UAS & UEQ (ANSI) Locked-disabled,unassigned & notInstalled (ETSI)
	Provision the card.	OOS-AU,MEA (ANSI) Locked-disabled,mismatchOfEquipment (ETSI)
OOS-AUMA,MT & SWDL (ANSI) Locked-disabled,maintenance & softwareDownload (ETSI)	Restart completed.	OOS-MA,MT (ANSI) Locked-enabled,maintenance (ETSI)
	Pull the card.	OOS-AUMA,MT & UEQ (ANSI) Locked-disabled,maintenance & notInstalled (ETSI)

Table C-8 ONS 15454 Transponder/Muxponder Card Service State Transitions (continued)

Current Service State	Action	Next Service State
OOS-AUMA,MT & UEQ (ANSI) Locked-disabled,maintenance & notInstalled (ETSI)	Change the administrative state to IS.	OOS-AU,UEQ (ANSI) Locked-disabled,notInstalled (ETSI)
	Insert a valid card.	OOS-AUMA,MT & SWDL (ANSI) Locked-disabled,maintenance & softwareDownload (ETSI)
	Insert an invalid card.	OOS-AUMA,MEA & MT (ANSI) Locked-disabled,mismatchOfEquipment & maintenance (ETSI)
	Delete the card.	OOS-AUMA,UAS & UEQ (ANSI) Locked-disabled,unassigned & notInstalled (ETSI)
OOS-AUMA,UAS (ANSI) Locked-disabled,unassigned (ETSI)	Pull the card.	OOS-AUMA,UAS & UEQ (ANSI) Locked-disabled,unassigned & notInstalled (ETSI)
	Provision an invalid card.	OOS-AU,MEA (ANSI) Locked-disabled,mismatchOfEquipment (ETSI)
	Provision a valid card.	OOS-AU,SWDL (ANSI) Locked-disabled,softwareDownload (ETSI)
OOS-AUMA,UAS & UEQ (ANSI) Locked-disabled,unassigned & notInstalled (ETSI)	Insert a valid card.	OOS-AU,SWDL (ANSI) Locked-disabled,softwareDownload (ETSI)
	Insert an invalid card.	OOS-AUMA,MEA & UAS (ANSI) Locked-disabled,mismatchOfEquipment & unassigned (ETSI)
	Pre-provision a card.	OOS-AU,AINS & UEQ (ANSI) Unlocked-disabled,automaticInService & notInstalled (ETSI)
OOS-MA,MT (ANSI) Locked-enabled,maintenance (ETSI)	Change the administrative state to IS.	IS-NR (ANSI) Unlocked-enabled (ETSI)
	Delete the card.	OOS-AUMA,UAS (ANSI) Locked-disabled,unassigned (ETSI)
	Pull the card.	OOS-AUMA,MT & UEQ (ANSI) Locked-disabled,maintenance & notInstalled (ETSI)
	Reset the card.	OOS-AUMA,MT & SWDL (ANSI) Locked-disabled,maintenance & softwareDownload (ETSI)

C.3.6 Transponder/Muxponder Port Service State Transitions

Table C-9 lists the ANSI and ETSI transponder and muxponder port service state transitions.

Table C-9 ONS 15454 Transponder/Muxponder Port Service State Transitions

Current Service State	Action	Next Service State
IS-NR (ANSI) Unlocked-enabled (ETSI)	Place the port in the OOS,MT administrative state.	OOS-MA,MT (ANSI) Locked-enabled,maintenance (ETSI)
	Place the port in the OOS,DSBLD administrative state.	OOS-MA,DSBLD (ANSI) Locked-enabled,disabled (ETSI)
	Place the port in the IS,AINS administrative state.	OOS-AU,AINS (ANSI) Unlocked-disabled,automaticInService (ETSI)
OOS-AU,AINS (ANSI) Unlocked-disabled,automaticInService (ETSI)	Place the port in the IS administrative state.	IS-NR[1] (ANSI) Unlocked-enabled (ETSI)
	Place the port in the OOS,MT administrative state.	OOS-MA,MT (ANSI) Locked-enabled,maintenance (ETSI)
	Place the port in the OOS,DSBLD.	OOS-MA,DSBLD (ANSI) Locked-enabled,disabled (ETSI)
OOS-MA,DSBLD (ANSI) Locked-enabled,disabled (ETSI)	Place the port in the IS administrative state.	IS-NR[1] (ANSI) Unlocked-enabled (ETSI)
	Place the port in the IS,AINS administrative state.	OOS-AU,AINS (ANSI) Unlocked-disabled,automaticInService (ETSI)
	Place the port in the OOS,MT.	OOS-MA,MT (ANSI) Locked-enabled,maintenance (ETSI)
OOS-MA,LPBK & MT (ANSI) Locked-enabled,loopback & maintenance (ETSI)	Release the loopback.	OOS-MA,MT (ANSI) Locked-enabled,maintenance (ETSI)
OOS-MA,MT (ANSI) Locked-enabled,maintenance (ETSI)	Place the port in the IS administrative state.	IS-NR[1] Unlocked-enabled (ETSI)
	Place the port in the IS,AINS administrative state.	OOS-AU,AINS (ANSI) Unlocked-disabled,automaticInService (ETSI)
	Place the port in the OOS,DSBLD.	OOS-MA,DSBLD (ANSI) Locked-enabled,disabled (ETSI)
	Place the port in loopback.	OOS-MA,LPBK & MT[2] [3] (ANSI) Locked-enabled,loopback & maintenance (ETSI)

1. The transponder and muxponder cards have both client and trunk ports. To bring up service, it is not necessary that both the client side and trunk side have to be in the IS-NR (ANSI)/Unlocked-enabled (ETSI) service state.
2. In a client-side facility loopback, the client port is in the OOS-MA,LPBK & MT (ANSI)/Locked-enabled,loopback and maintenance (ETSI) service state and the remaining client and trunk ports can be in any other service state. In a client-side terminal loopback on transponder cards, the client port is in the OOS-MA,LPBK & MT service state and the trunk ports are in IS-NR (ANSI)/Unlocked-enabled (ETSI). For client-side terminal loopbacks on muxponder cards, the client port is in the OOS-MA,LPBK & MT service state and remaining client and trunk ports can be in any service state.
3. In a trunk-side facility loopback, the trunk port is in the OOS-MA,LPBK & MT (ANSI)/Locked-enabled,loopback and maintenance (ETSI) service state and the remaining client and trunk ports can be in any other service state. In a trunk-side terminal loopback, the trunk port is in the OOS-MA,LPBK & MT (ANSI)/Locked-enabled,loopback and maintenance (ETSI) service state and the client ports are in IS-NR (ANSI)/Unlocked-enabled (ETSI) for complete loopback functionality. This type of loopback affects all client ports because it is performed on the aggregate signal.

Numerics

32DMUX-O card
- input power class 14-7

32DMX card
- change PM thresholds 10-16
- description 14-52
- input power class 14-7
- modify line settings 10-16
- monitor performance 8-11
- power requirements B-5
- put ports out of service 11-16
- reset 11-11
- specifications B-16
- temperature range B-7
- terminal node acceptance test 4-4
- verify power 4-24

32DMX-O card
- change PM thresholds 10-16
- description 14-48
- fiber clip 3-55
- input power class 14-7
- install 3-26
- modify line settings 10-16
- power requirements B-5
- put ports out of service 11-16
- reset 11-11
- service state transitions C-3
- specifications B-16
- temperature range B-7
- terminal and hub node acceptance test 4-2
- verify power 4-22, 4-24

32MUX-O card
- change PM thresholds 10-16
- description 14-44
- fiber clip 3-55
- install 3-26
- modify line settings 10-16
- power requirements B-5
- put ports out of service 11-16
- reset 11-11
- service state transitions C-3
- specifications B-15
- temperature range B-7
- terminal and hub node acceptance test 4-2
- verify power 4-22

32WSS card
- change PM thresholds 10-22
- description 14-81
- install 3-26
- modify line settings 10-22
- power requirements B-5
- put ports out of service 11-16
- reset 11-11
- specifications B-29
- temperature range B-7
- terminal node acceptance test 4-4

4MD-xx.x card
- change PM thresholds 10-16
- description 14-57
- input power 14-7
- install 3-26
- modify line settings 10-16
- monitor performance 8-14
- power requirements B-5
- put ports out of service 11-17

service state transitions C-3
specifications B-17
temperature range B-7
verify pass-through connection power 4-32

A

acceptance tests
ANSI-ASE hub node 4-8
asymmetric line node with OSC-CSM and OSCM cards 4-13
ROADM node 4-6
shelf installation acceptance test 1-77
symmetric line node with OSC-CSM cards 4-12
symmetric line node with OSCM cards 4-10
symmetric OADM node with OSC-CSM cards 4-18
symmetric OADM node with OSCM cards 4-16
symmetric passive OADM node with OSC-CSM cards 4-20
terminal and hub node with 32MUX-O and 32DMX-O cards 4-2
terminal node with 32WSS and 32DMX cards 4-4
ACO 13-48
AD-1B-xx.x card
description 14-74
install 3-26
monitor performance 8-14
power requirements B-5
put ports out of service 11-18
reset 11-11
service state transition C-3
specifications B-22
temperature range B-7
verify output express power 4-28
verify pass-through connection power 4-30
AD-1C-xx.x card
description 14-62
input power 14-7
install 3-26
monitor performance 8-12
power requirements B-5
put ports out of service 11-18
reset 11-11
service state transitions C-3
specifications B-19
temperature range B-7
verify output express power 4-28
verify pass-through connection 4-31
AD-2C-xx.x card
description 14-65
input power 14-7
install 3-26
monitor performance 8-12
power requirements B-5
put ports out of service 11-18
reset 11-11
service state transitions C-3
specifications B-19
temperature range B-7
verify output express power 4-28
verify pass-through connection 4-31
AD-4B-xx.x card
description 14-78
install 3-26
monitor performance 8-14
power requirements B-5
put ports out of service 11-18
reset 11-11
service state transitions C-3
specifications B-25
temperature range B-7
verify output express power 4-28
verify pass-through connection power 4-30
AD-4C-xx.x card
description 14-69
input power 14-7
install 3-26
monitor performance 8-12

power requirements B-5
put ports out of service 11-18
reset 11-11
service state transitions C-3
specifications B-20
temperature range B-7
verify output express power 4-28
verify pass-through connection 4-31
administrative states A-12, C-2
AEP
see also AIC-I card
connect external wire-wrap panel 1-59
description 13-30
install on backplane 1-44
I-Temp B-6
pin assignments 1-47, 13-32
power requirements B-6
printed circuit board assembly 13-31
specifications 13-35
wire-wrap connections 1-46, 13-31
AIC card
see also external alarms, external controls
see also pin assignments
description 14-14
install 1-76
power requirements B-6
specifications B-8
temperature range B-6
virtual wires 20-14
AIC-I card
see also external alarms, external controls
see also pin assignments
description 14-17
install 1-76
power requirements B-6
specifications B-9
temperature range B-6
AIP
description 13-29
location 13-27
replace 11-40, 13-30
air filter
description 13-43
inspect, clean, and replace 11-29
install external brackets 1-11
install filter 1-11
location 1-41
requirement 1-40
air ramp
ANSI placement overview 13-4
ETSI placement overview 13-7
install 1-19
typical site layout 13-18
AIS 5-5
alarm expansion panel *see* AEP
alarm filtering
description 20-3
disable 7-32
enable 7-29
filter tool 20-3
modify 7-30
alarm indication signal *see* AIS
Alarm Interface Controller card *see* AIC card
alarm interface panel *see* AIP
alarm profiles
description 20-9
apply to cards and nodes 7-26
apply to ports 7-23
button definitions 20-10
create 7-18
delete 7-27
download 7-22
editing 20-11
alarms
troubleshoot *see Cisco ONS 15454 Troubleshooting Guide*
alarm contact connections 13-47
change default severities *see* alarm profiles

change time zone 7-11, 20-2
delete cleared alarms from display 7-13, 20-3
entries in session 20-7
filtering *see*alarm filtering
history 7-8, 7-10, 20-6, 20-8
incompatibility alarms 11-36
raise (unsuppress) 7-35
suppress 7-33
synchronize 7-11, 20-3
view 7-5, 20-2
view alarm counts on LCD 7-16, 20-2
alarm severities
change *see* alarm profiles
description 20-8
options in alarm profiles 20-11
alerts 2-33, A-8
AMI 5-5
AMP champ 1-60
amplifier cards
see OPT-BST card
see OPT-PRE card
ANS *see* automatic node setup
anti-ASE
acceptance test 4-8
description 15-10
any-to-any rings 16-3
APC *see* automatic power control
ARP sniffing *see* automatic host detection
audit trail
capacities 20-16
comprehensive description 20-15
off-load records 11-21
security description 18-6
view records 11-19
automatic host detection 2-15
automatic laser shutdown 16-18
change maintenance settings 10-9
MXP_2.5G_10E card 14-111
OSC-CSM 14-34
automatic node setup
description 15-19
modify parameters 9-7
run 3-58
automatic power control
description 15-14
disable 9-5
enable 9-5
interval 5-8
manage 9-4
refresh 9-6

B

B8ZS 5-5
backplane
connections
overview 13-44
AEP 1-46, 13-31
alarm wires 1-53
LAN wires 1-57
timing wires 1-56
TL1 craft interface 1-58
covers
overview 13-26
lower backplane cover, description 13-27
lower backplane cover, remove 1-26, 11-41
lower backplane cover, replace 11-44
rear cover, description 13-28
rear cover, install 1-65
sheet metal cover, remove 1-27
band filter OADM cards
see 4MD-xx.x card
see AD-1B-xx.x card
see AD-4B-xx.x card
bandwidth B-1
battery termination 1-38
Bay Assembly 13-7
BER 5-9

BITS
ANSI interface specifications B-3
BITS out references 5-5, 9-33
external node timing source 18-7
external timing pin assignments 1-56
facilities 5-5, 9-33
pin field assignments 13-48
timing setup 5-4
blade *see* card
bottom brackets *see* air filter, external brackets
browsers
disable proxy service 2-21
installation overview 17-3
log in 2-25
required versions 2-2
test connection during Solaris setup 2-19

C

cabinet compartment *see* front door
cables
calculate cable connections 3-56
clean fiber connectors 11-32, 11-33
connect PC to ONS 15454 2-13
fiber management 13-37, 13-39
install fiber on DWDM cards 3-35
route 3-55
tie-down bar 13-40
card compatibility 14-6
card protection
see splitter protection
see y-cable protection
cards
colors in node view 17-7
install muxponder 3-30
install transponder 3-30
interface classes 14-7
part number A-12
protection *see* y-cable protection or splitter protection 9-20
put ports in/ out of service 6-14
replacement 13-52
revision number A-12
serial number A-12
slot requirements 13-51
symbol and slot correspondence 13-51
card service state
change 10-83
description C-1
see also service state
card slots *see* slots
card view
change views A-2
description 17-12, A-1
list of tabs 17-13
CAT-5 cable *see* LAN cable
change node timing parameters 9-32
channel allocation plan 14-9
channel filter OADM cards
see AD-1C-xx.x card
see AD-2C-xx.x card
see AD-4C-xx.x card
circuits
disable circuit discovery 2-27
find circuits with alarms 20-3
see OCHNC
see overhead circuits
circuit states
description C-1
provision 6-4
see also enhanced state model
see also service states
CISCO15 2-27
Cisco MetroPlanner *see* MetroPlanner
Cisco Transport Controller *see* CTC
CLEI code A-12
CLETOP 11-34

clock
change time 9-9
reset 1-37
set time 3-7
colors
cards 17-7, 17-9
FMECs 17-8
nodes 17-12
common control cards
see AIC-I card
see TCC2 card
compatibility
card 14-6
JRE 17-4
SFP 14-123
computer *see* PC setup
conditions
change time zone 7-11, 20-2
description 20-5
filter 20-6
history 20-8
view 7-12
connected rings 16-4
CORBA 3-20
corporate LAN connection
description 17-6
set up 2-20
cost 3-15, 3-16, 9-12, 19-8
covers
see backplane covers
see FMEC cover
craft connection
description 17-6
set up 2-9
crimp tool 1-38
CTC
see also PC setup 2-3
toolbar icons *see* toolbar icons
alerts 2-33
back up 11-2
computer requirements 17-4
connect PCs 2-9, 2-20
determine version 2-26
export data 7-4
firewall access 3-19
incompatibility alarm 2-26
installation overview 17-3
install CD-ROM 2-3
log in 2-23
node setup 3-6
PC requirements 2-3
print data 7-2
remote site access 2-22
revert to earlier load 11-22, 17-15
set up network access 3-8
UNIX workstation requirements 2-6
verify software version 1-74
version mismatch among multiple nodes 2-26
views *see* network view, node view, card view
C-Temp ranges B-6

D

database
back up 11-2
clear the database 11-5
description 17-15
MAC address 13-29
parameters that are not restored 11-5
restore node and card defaults during disaster recovery 11-5
restore the database 11-3
revert 17-15
revert to earlier software database 11-22
datagrams 19-4
date
change setting 9-9
default 1-36

provision 3-7
daylight savings 3-7
DCC
AIC-I compatibility 14-21
disable autodiscovery 2-27
metric (OSPF) 3-16
OSPF Area ID 3-16
pin assignments 14-21
viewing connections 17-11
DCU
hub node 15-2
install DCU chassis 1-67
install DCUs 3-28
OPT-PRE card 14-37
overview 14-2
typical rack layout 13-16
default router
change 9-11
change using LCD 3-13
enter IP address 3-10
dense wavelength division multiplexing *see* DWDM
destination
host 19-4
routing table 19-21
DHCP
change request recipient 9-11
enable 3-10
provision 2-13
scenario 19-3
dialog box, do not display 9-19
disaster recovery 11-5
dispersion compensating unit *see* DCU
DNS configuration 2-11, 2-14, 2-16, 2-20
domains
create 9-17
manage 9-18
DWDM
calculate cable connections 3-56
create connections 3-57
delete connections 3-57
fiber tray 13-39
monitor performance 8-8 to 8-15
nodes 15-1
optional hardware 1-66
provision a network 5-7
provision a ring ID 3-63
rack layouts 13-16
topologies 16-1 to 16-18
DWDM cards
channel allocation plan 14-9
fibering 3-35
install 3-26
LED behavior during install 3-27
power requirements B-5
remove and replace 11-12
reset 11-11
route fiber 3-55
see 32DMX card
see 32DMX-O card
see 32MUX-O card
see 32WSS card
see 4MD-xx.x card
see AD-1B-xx.x card
see AD-1C-xx.x card
see AD-2C-xx.x card
see AD-4B-xx.x card
see AD-4C-xx.x card
see OPT-BST card
see OPT-PRE card
see OSC-CSM card
see OSCM card
service state transitions C-3
dynamic host configuration protocol *see* DHCP

E

electrical codes 13-2
end network element 3-10

enhanced forward error correction 14-92, 14-93, 14-109
enhanced state model
  description C-1 to C-12
  see also service states
enterprise LAN *see* corporate LAN
environmental alarms
  see external alarms
  see external controls
equipment
  DWDM 1-66
  inventory A-12
  user-supplied (ANSI) 1-3
  user-supplied (ETSI) 1-5
ESD plug input 1-20
events
  see alarms
  see conditions
express channel connections 4-26, 4-27
external alarms
  see also AEP
  see also AIC card
  see also AIC-I card
  change 10-77, 10-80
  description 14-15, 14-18
  overview 20-13
  pin assigments using external wire-wrap panel 1-60
  pin assignments with AEP 13-33
  pin assignments without AEP 1-49
  provision 7-36, 7-38
  wiring 1-48, 1-53
  wiring description 13-47
external controls
  see also AIC card
  see also AIC-I card
  *see also*AEP
  change 10-78, 10-81
  description 14-15, 14-18
  overview 20-13
  pin assignments with AEP 13-34
  pin assignments without AEP 1-49
  provision 7-36, 7-38
  wiring 1-48, 1-53
  wiring description 13-47
external firewall 19-22
external LAN interface B-2
external switching commands
  clear a lock on or lock out 9-27
  clear a Manual or Force 9-25
  Force 9-24
  lock on 9-26
  lock out 9-26
  Manual 9-24
external timing *see* timing
external wire-wrap panel 1-59

F

factory configuration 11-5
fan-tray air filter *see* air filter
fan-tray assembly
  description 13-41
  fan failure 13-43
  fan speed 13-42
  install 1-40
  power cable 11-42
  remove to replace air filter 11-30
  replace 11-35
far-end laser control 14-121
FELC 14-121
ferrites 1-77, 13-52
fiber clips 3-55
fiber patch panel 1-68
fiber *see* cables
fiber storage shelf 1-68
filtering, alarm *see* alarm filtering
filter stopper 1-12
firewall
  change IIOP listener port 9-11

external firewall description 19-22
provision IIOP listener port 3-20
provision IIOP listener port on PC 3-22
set up 3-19
shortcut A-5
SNMP 3-23
firewall tunnels
add a tunnel 5-11
delete a tunnel 9-14
description 19-24
flange 1-12, 13-6
FlexLayer
FlexLayer system description 13-10
hardware part numbers 1-70
install modules 1-69
install shelf 1-69
install y-cable modules in FlexLayer chassis 1-71
see also y-cable protection
FMEC
see FMEC cover
*see*MIC-A/P FMEC
see MIC-C/T/P FMEC
FMEC cover
install and close 1-63
open 1-24
overview 13-3
remove 1-25
Force switch 9-24, 9-25
foreign node settings
change GCC 9-28
open GNE 19-24
provision a proxy tunnel 5-10
provision GCC terminations 3-62
specify IP address 9-29
frame-ground pin 1-58
framing 5-5, 9-33
front door
description 13-19
label 13-23
open 1-20
remove 1-21, 11-29
replace 3-64
front mount electrical connection *see* FMEC
fuse and alarm panel
100 amp 1-13, 1-15, 1-17, 1-31, 1-40
80 amp 1-13, 1-15, 1-17, 1-31, 1-40
description 13-2, 13-3
location 13-6, 13-9
measure and cut cables 1-37

G

G.709 *see* OTN
gateway
default 19-6
on routing table 19-21
returning MAC address 19-4
gateway settings *see* proxy server
GCC
change GCC terminations 9-28
delete GCC terminations 9-29
foreign termination 5-10, 5-11
OSPF Area ID 3-16
provision GCC terminations 3-62
y-cable protection 14-87, 14-92, 14-95
general communication channel *see* GCC
GNE
dual GNEs 19-17
load balancing 19-17
open GNE 19-24
ground
connect to ANSI shelf 1-33
connect to ETSI shelf 1-32
description 13-43
ground posts 13-44
install 1-30
see also office ground
ground strap

avoid interference with cards 3-65
detach 1-22
illustration 13-21

H

hello interval 3-17
hop 3-15, 9-12, 19-8
hubbed rings 16-2
hub node
convert pass-through connections 9-31
CTC icon A-3
description 15-1
install fiber 3-40

I

idle time 3-4
idle user timeout 18-5
IIOP
change IIOP listener port 9-11
listener port 3-20
select IIOP listener port 3-10
installation
overview 13-2, 13-3
acceptance test 1-77
air ramp *see* air ramp
alarm expansion panel *see* AEP
CTC installation overview 17-3
CTC installation wizard 2-3, 2-6
DCU *see* DCU
DWDM hardware 1-66
fan-tray assembly *see* fan-tray assembly
fiber patch panel shelf 1-68
fiber storage shelf 1-68
FlexLayer modules 1-69
FlexLayer shelf 1-69
install y-cable protection modules 1-71
list of procedures 1-1
power and ground 1-30, 13-43
required tools (ANSI) 1-2
required tools (ETSI) 1-4
see also rack
see also shelf assembly
wires *see* wires
Internet Explorer *see* browsers
Internet protocol *see* IP
inventory 17-14, A-12
IP
see also IP address
change settings 9-11
create IP-encapsulated tunnel 6-13
environments 19-1
provision IP settings 3-9
requirements 19-2
subnetting 19-1
IP address
change using LCD 3-13
log in 2-25
NMS 3-23
repair 6-17
scenarios
CTC and nodes connected to router 19-3
CTC and nodes on same subnet 19-2
default gateway on CTC workstation 19-6
Dual GNEs on a Subnet 19-17
OSPF 19-9
Proxy ARP and gateway 19-4
static routes connecting to LANs 19-7
select IP address for log in 2-27
set up network information 3-9
static IP addresses 2-11
IP-encapsulated tunnel
create 6-13
delete 6-18
repair 6-17
I-Temp ranges B-6

J

J0 section trace 6-18
Java Plug-in Security Warning 2-26, 2-28
Java policy file 2-28
jitter 14-111
JRE
  overview 17-4
  change version 2-32
  requirements 17-5

K

kepnut 1-22

L

LAN
  connection points 13-48
  modems 2-22
  OSPF activity 3-16
  pin assignments 13-49
  wires 1-52, 1-57
LAN cable
  connect computer to ONS 15454 2-24
  connect to backplane 1-57
  connect to MIC-C/T/P 1-28, 1-52
  connect to TCC2 card 2-24, 14-13
  description 17-5
  set up craft connection 2-13
laser warning 13-25, 13-26
latitude 3-6
LCD
  change default router 3-13
  change IP address 3-13
  change network mask 3-13
  provision network settings 3-9
  verify software version 1-74
  view alarm counts 7-16, 20-2
line amplifier node
  CTC icon A-3
  description 15-11
  install fiber 3-44
linear configurations
  description 16-5
  optical performance 16-8, 16-10, 16-13
line timing *see* timing
listener port 3-20
lock on 9-26, 9-27
lock out 9-26, 9-27
lock washer 3-65
log in 2-23
login legal disclaimer 9-9
login node groups
  add to current session 2-30
  create 2-29
  delete 2-31
  delete from a specified group 2-31
  shortcut A-5
  view 2-27, 17-11
longitude 3-6

M

MAC address
  AIP 13-29
  clear table 18-3
  proxy ARP 19-4
  read-only 3-10
  retrieve table 18-3
maintenance user *see* security
Manual switch 9-24, 9-25
map *see* network view
meshed rings 16-4
MetroPlanner
  import a configuration file 3-59
  internal connections 3-35
  provision a network 5-8

requirement 1-67, 3-1
MIB 8-28
MIC-A/P FMEC
description 14-21
install 1-27
install alarm wires 1-48
power requirements B-6
specifications B-10
temperature range B-6
MIC-C/T/P FMEC
description 14-24
install 1-27
install LAN wires 1-52
install timing wires 1-51
power requirements B-6
specifications B-11
temperature range B-6
modem interface B-2
module *see* card
mounting brackets
description 13-5
mount rear cover 1-65
reverse 1-10
multi-hubbed rings 16-2
multiplexer and demultiplexer cards
see 32DMX card
see 32DMX-O card
see 32MUX-O card
see 4MD-xx.x card
muxponder cards
see MXP_2.5G_10E card
see MXP_2.5G_10G card
see MXP_MR_2.5G card
see MXPP_MR_2.5G card
MXP_2.5G_10E card
change PM thresholds 10-43
create RMON thresholds 8-28
create y-cable protection 3-33
description 14-104
enhanced FEC capability 14-109
install 3-30
modify line settings 10-43
monitor performance 8-15
port state transitions C-11
power requirements B-6
put ports out of service 11-14
reset 11-11
service state transitions C-7
specifications B-38
temperature range B-7
timing 5-6
trunk wavelengths 14-110
MXP_2.5G_10G card
change PM thresholds 10-43
create RMON thresholds 8-28
create y-cable protection 3-33, 5-6
description 14-101
GCC terminations 3-62
install 3-30
modify line settings 10-43
monitor performance 8-15
port state transitions C-11
power requirements B-6
put ports out of service 11-14
reset 11-11
service state transitions C-7
specifications B-33
temperature range B-7
y-cable description 14-119
MXP_MR_2.5G card
change PM thresholds 10-65
create RMON thresholds 8-28
create y-cable protection 3-33
description 14-113
install 3-30
modify line settings 10-65
monitor performance 8-15
port state transitions C-11

power requirements B-6
put ports out of service 11-14
reset 11-11
service state transitions C-7
specifications B-36
temperature range B-7
timing 5-6
y-cable description 14-119
MXPP_MR_2.5G card
change PM thresholds 10-65
create RMON thresholds 8-28
create y-cable protection 3-33
description 14-113
install 3-30
modify line settings 10-65
monitor performance 8-15
port state transitions C-11
power requirements B-6
put ports out of service 11-14
reset 11-11
see also splitter protection
service state transitions C-7
specifications B-36
temperature range B-7
timing 5-6

N

Netscape Navigator *see* browsers
network element defaults, restore 11-5
networks
building circuits 6-1
convert connections during upgrade 9-31
DWDM topologies 16-1 to 16-18
optical performance 16-6
optical safety 16-18
set up basic information 3-9
set up CTC network access 3-8
timing example 18-7
network time protocol 3-6
network view
description 17-11
add nodes to map *see* domains
apply a custom background image (map) 9-17
change the background color 9-15
change the default network map 9-16
change views A-2
create a customized network view 5-15
create new users 3-5
delete users 9-40
description A-1
DWDM A-8
node icons A-2
node status (icon colors) 17-12
security levels per tab 18-4
switch between TDM and DWDM network views 9-20
tasks A-10
TDM A-8
node
add to current session 2-30
change node access 9-37
change node contact info 9-8
change node date 9-8
change node name 9-8
change node time 9-8
date, time, and contact information 3-6
delete from current session 2-31
icons A-3
remove power 12-1
node services protocol 16-1
node view
alarm profile 7-26
change views A-2
description 17-7, A-1
security levels per tab 18-1
shortcuts A-10
non-ONS node *see* foreign node settings
NSP 16-1

NTP server 3-6

O

OADM node
acceptance test 4-16, 4-18, 4-20
check power values 5-9
CTC icon A-3
description 15-4
install fiber 3-48
optical performance 16-8
verify add and drop connections 4-33, 4-35
verify express channel connections 4-26, 4-27
verify OSC-CSM power 4-25
verify pass-through channel connections 4-29
OAM&P access 17-6
OCHNC
circuit status 6-5
delete 6-11
filter 6-6
locate and view 6-2
provision 6-9
search 6-2
see also service states
service state transitions C-6
view 6-3
view alarms on OCHNCs 7-14, 20-3
view on a span 6-7
office ground
connect to ANSI shelf 1-33
connect to ETSI shelf 1-32
office power
connect to ANSI shelf 1-37
connect to ETSI shelf 1-35
turn on and verify 1-39
open GNE
description 19-24
see also firewall tunnels
see also proxy tunnels
Open Shortest Path First *see* OSPF
OPT-BST card
description 14-39
fiber clip 3-55
first-time tune up 5-8
install 3-26
monitor performance 8-10
power requirements B-5
put ports out of service 11-16
reset 11-11
service state transitions C-3
specifications B-14
temperature range B-7
verify laser and power 4-22
optical add/drop multiplexer
see 32WSS card
see AD-1B-xx.x card
see AD-1C-xx.x card
see AD-2C-xx.x card
see AD-4B-xx.x card
see AD-4C-xx.x card
see OADM node
optical amplifier cards
see OPT-BST card
see OPT-PRE card
optical channel network connections *see* OCHNC
optical performance 16-6
optical receive power 5-13
optical service channel cards
see OSC-CSM card
see OSCM card
optical service channel *see* OSC
OPT-PRE card
change PM thresholds 10-10
description 14-35
fiber clip 3-55
first-time tune up 5-8
install 3-26
install required DCU 3-28

modify line settings 10-10
monitor performance 8-10
power requirements B-5
reset 11-11
service state transitions C-3
specifications B-13
temperature range B-7
verify laser and power 4-23
orderwire
change settings
AIC card 10-79
AIC-I card 10-82
delete 6-18
description
AIC card 14-15
AIC-I card 14-19
OSCM and OSC-CSM cards 14-26
pin assignments
AIC card 14-16
AIC-I card 14-20, 14-29, 14-34, 14-38, 14-42, 14-48, 14-52, 14-56, 14-60, 14-65, 14-69, 14-73, 14-77, 14-81
provision 6-15
OSC
delete OSC terminations 9-30
description 14-26
install fiber for OSC link terminations 3-37
OSC port service state transitions C-6
provision OSC terminations 3-61
OSC-CSM card
asymmetric line node acceptance test 4-13
change PM thresholds 10-2
description 14-30
install 3-26
modify settings 10-2
monitor performance 8-8
power requirements B-5
put ports out of service 11-15
reset 11-11
service state transitions C-3
specifications B-13
symmetric line node acceptance test 4-12
symmetric OADM node acceptance test 4-18
symmetric passive OADM node acceptance test 4-20
temperature range B-7
verify add and drop connections 4-35
verify incoming power 4-25
verify power 4-24, 4-25
verify transmit power 3-63
OSCM card
asymmetric line node acceptance test 4-13
change PM thresholds 10-2
description 14-26
fiber clip 3-55
install 3-26
modify settings 10-2
monitor performance 8-8
power requirements B-5
put ports out of service 11-15
reset 11-11
service state transitions C-3
specifications B-12
symmetric line node acceptance test 4-10
symmetric OADM node acceptance test 4-16
temperature range B-7
verify add and drop connections 4-33
verify transmit power 3-63
OSC regeneration node
CTC icon A-4
description 15-12
install fiber 3-46
OSNR
network applications 16-1
verify 5-14
OSPF
alternative to static routes 19-7
area range table 3-17
disable 9-13
IP addressing scenario 19-9

IP networking overview 19-1
provisionable patchcords 19-19
set up or change 3-16
OTDR 9-4, 15-19
OTN
change OTN settings 10-40, 10-52, 10-62
enable OTN FEC performance monitoring 8-17
G.709
change thresholds 10-40, 10-52, 10-62
enable OTN G.709 performance monitoring 8-16
trunk bit rates with G709 enabled 14-95
view PMs 8-21
overhead circuits
create 6-12
delete 6-18
see also IP-encapsulated tunnel
see also orderwire
see also user data channel
shortcut A-7

P

pass-through channel connections 4-29
passwords
change 9-38
create new user 3-4, 3-5
login 2-26
PCM 6-15, 14-15, 14-19
PC setup
connect computer to ONS 15454 2-24
connect PC to ONS 15454 2-2
corporate LAN connection 2-20
craft connection (requiring IP address reconfiguration) 2-11
craft connection (without multiple IP reconfigurations) 2-15
craft connection using DHCP 2-13
disable proxy service 2-21
install browser 2-2
install JRE 2-3, 2-6
remote (modem) access 2-22
requirements 2-3, 17-4
set up PC for local craft connection 2-9
performance, optical 16-6
performance monitoring
see also individual cards
clear current (displayed) counts 8-5
clear stored counts 8-6
PM clearing privilege 9-37
refresh 15-minute intervals 8-2
refresh counts, different port 8-7
refresh one-day intervals 8-3
set auto-refresh interval 8-6
threshold crossing alert *see* TCA
view far-end counts 8-4
view near-end counts 8-4
pin assignments
overview (ANSI) 13-44
AEP 1-47, 13-32
alarms
ANSI 1-55
ETSI 1-49
craft 1-59
LAN
ANSI 1-58
ETSI 1-52
timing
ANSI 1-56
ETSI 1-51
wire-wrap panel on the AEP 1-60, 1-61
ping 19-2
pinned hex (Allen) key 1-20
pluggable port module *see* SFPs
plug-in unit *see* card
popup data 17-10
ports
default UDP port for SNMP 9-43
listener port 3-20

put optical ports in/ out of service 6-14
TCC2 19-23
TL1 port 17-4
UDP 3-23
power
BAT1 backplane power terminal 1-39
coat bare conductors 1-38
connect office power to ANSI shelf 1-37
connect office power to ETSI shelf 1-35
fan-tray assembly requirements 13-43
measure voltage 1-79
OSCM and OSC-CSM transmit power 3-63
RET2 backplane power terminal 1-39
see also office power
set power monitor thresholds 3-8
specifications B-3
supply 1-30, 13-43
verify 32DMX-O or 32DMX power 4-24
verify 32MUX-O and 32DMX-O power 4-22
verify office power 1-39
verify optical receive power 5-13
power monitoring 14-20
protection, card *see* y-cable protection or splitter protection
protocols
DHCP 3-10
IP 19-1
NTP 3-6
Proxy ARP *see* Proxy ARP
SNTP 3-6
SSM 18-8
provisionable patchcord
create 5-12
delete 9-30
description 19-19
provisioning user *see* security
Proxy ARP
description 19-1
enable an ONS 15454 gateway 19-4
use with static routes 19-5
proxy server
gateway settings, change 9-12
gateway settings, description 19-12
gateway settings, provision 3-10
proxy service
disable using Internet Explorer 2-21
disable using Netscape 2-21
proxy tunnels
add a tunnel 5-10
delete a tunnel 9-14
PST C-1
PSTQ C-1
public-key security certificate 2-26, 2-28
pulse code modulation 6-15

R

rack
installation overview 13-3, 13-7
Bay Assembly 13-7
mount a single node 1-13, 1-15, 13-6, 13-8
mount multiple nodes 1-16, 13-6, 13-9
reversible mounting bracket 1-10, 13-5
RAM
PC requirements for CTC 2-3
UNIX requirements for CTC 2-6
rear cover 13-28
reinitialization tool 11-5
remote access
description 17-6
set up 2-22
remote monitoring *see* RMON
reset 11-10
retrieve user *see* security
revert 11-22, 17-15
revertive timing 5-5
rings
any-to-any 16-3

hubbed rings 16-2
meshed DWDM 16-4
multihubbed 16-2
optical performance for ROADM rings 16-13
provision ring ID 3-63
RIP 3-18
RJ-11 connector 14-16, 14-20
RMON
create alarm thresholds 8-28
delete alarm thresholds 8-30
RMON *see also* SNMP
ROADM
card requirements 14-52
CTC node icons A-4
description 14-81
install fiber 3-53
multiplexer 14-108
node acceptance test 4-6
node-type description 15-8
view ROADM node power equilization 9-6
routing information protocol *see* RIP
routing table 19-21

S

secure shell 18-6
security
assign user levels 3-4, 3-5
change policy 9-34, 9-36
change security level 9-38
idle times 3-4
idle user timeout 18-5
modify settings 9-34
policies 18-5
requirements 18-1
set up 3-3
superuser privileges 18-5, 18-6
tasks per tab 18-2, 18-4
user level definitions 18-1
viewing 17-7
service states
card 17-12, A-12
card state transitions C-3
change 6-14, 10-83
description C-1
equipment A-12
ports 17-8
see also enhanced state model
SFPs
compatibility 14-123
delete provisioning 10-31
description 14-123
install 3-32
provision 10-29
remove 3-32
specifications B-42
shelf assembly
see also installation
specifications B-1
unpack and inspect 1-6
ANSI
description 13-3
Bay Assembly 13-7
dimensions 13-5, B-4
ETSI
description 13-7
dimensions 13-8, B-4
mounting 13-8
shutdown, automatic laser 16-18
simple network time protocol *see* SNTP
single-span link
description 16-6
optical performance 16-17
slots
overview 13-49
AIC card and AIC-I card 3-3
fiber management 13-37
FMEC slots 13-30

preprovision 3-24
requirements 13-51
unused slots 13-2
small form factor pluggable connector *see* SFP
SNMP
delete trap destination 9-43
modify trap destination 9-42
set up 3-22
SNTP 3-6
software *see* CTC
Solaris *see* UNIX
SONET
timing parameters 18-6
span loss
description 15-15
optical 9-3
use OTDR 9-4
verify 9-2, 15-18
splitter protection
definition 3-33
description 14-120
modify 9-22
SSH 18-6
SSM
enable 5-5, 9-33, 10-3
message set 5-4, 9-32
SST C-1
ST3 clock 18-7
standard constant 3-20
standoff kit 1-12
state *see* service state
static route
create 3-15
delete 9-13
IP addressing scenario 19-7
modify 9-12
straight-through (CAT-5) cable *see* LAN cable
subnet
CTC and nodes on different subnets 19-3
CTC and nodes on same subnet 19-2
multiple subnets on the network 19-6
using static routes 19-7
with Proxy ARP 19-4, 19-5
subnet mask
24-bit 19-22
32-bit 19-22
change 9-11
description 19-8
OSPF area range table 3-17
provision in a static route 3-15
provision subnet mask length 3-10
routing table 19-21
Windows setup 2-12, 2-13
superuser *see* security
synchronization status messaging *see* SSM

T

tables
see also List of Tables
change format A-11
display hidden columns A-11
print data 7-2
resize columns A-11
sort A-11
tabs
overview 17-7
card view 17-14
Alarms 17-13
Circuits 17-13
Conditions 17-13
History 17-13
Maintenance 17-14
Performance 17-14
Provisioning 17-14
network view
Alarms 17-12, 18-4
Circuits 17-12, 18-4

Conditions 17-12, 18-4
History 17-12, 18-4
Maintenance 17-12, 18-5
Provisioning 17-12, 18-5
node view
Alarms 17-10, 18-2
Circuits 17-10, 18-2
Conditions 17-10, 18-2
History 17-10, 18-2
Inventory 17-10, 18-3
Maintenance 17-10, 18-3
Provisioning 17-10, 18-2
TCA 8-3
TCC2 card
clear the database for disaster recovery 11-5
connect LAN cable 2-24
craft interface B-2
craft wires vs. RS-232 port 1-59
CTC access B-2
database backup 11-2, 17-15
description 14-11
install 1-73
modem interface B-2
ports 19-23
power requirements B-6
reboot behavior 3-11
restore the database 11-3
RJ-45 (LAN) port 2-22
soft reset 11-10, 17-14
software installation overview 17-1
software version change (automatic upload) 1-75
specifications B-7
temperature range B-6
verify installation 3-2
TCP/IP
change configuration for Windows 2000 2-12, 2-14, 2-17
change configuration for Windows 98 2-11, 2-14
change configuration for Windows NT 2-12, 2-14, 2-17
change configuration for Windows XP 2-13, 2-15, 2-18
terminal lug 3-65
terminal node
CTC icons A-4
description 15-3
install fiber 3-43
third-party equipment 13-2, 13-3
threshold crossing alert *see* TCA
timed out *see* idle time
time zone 3-7, 7-11
timing 9-32
BITS *see* BITS
change node timing reference 11-24
connections 13-48
external, set up 5-4
internal, set up 5-6
line, set up 5-4
mode 5-6
NE reference 5-6
network timing example 18-7
node timing description 18-6
set node clock 3-7
set up 5-4
specifications B-3
SSM 18-8
view timing report 11-25
TL1
AID in CTC 20-7
commands 17-4
connection 17-6
craft interface connection 1-58, 13-49
interface specifications B-2
pin assignments 1-59
TCC2 RS-232 port connection 1-58
toolbar icon A-7
toolbar icons
add node A-5
delete selected node A-5
export A-5
go to home view A-6

go to network view A-6
go to next view A-6
go to other node A-6
go to parent view A-6
go to previous view A-6
go to selected object view A-6
lock node A-5
open TL1 connection A-7
preferences A-5
print A-5
zoom in A-6
zoom in selected area A-6
tools, required 1-2, 1-4
traffic routing 19-21
transponder cards
see TXP_MR_10E card
see TXP_MR_10G card
see TXP_MR_2.5G card
see TXPP_MR_2.5G card
trap 3-23
TXP_MR_10E card
change PM thresholds 10-32
create RMON thresholds 8-28
create y-cable protection 3-33
description 14-90
install 3-30
modify line settings 10-32
monitor performance 8-15
port state transitions C-11
power requirements B-6
put ports out of service 11-14
reset 11-11
service state transitions C-7
specifications B-40
temperature range B-7
TXP_MR_10G card
change PM thresholds 10-32
create RMON thresholds 8-28
create y-cable protection 3-33
description 14-87
GCC terminations 3-62
install 3-30
modify line settings 10-32
monitor performance 8-15
port state transitions C-11
power requirements B-6
put ports out of service 11-14
reset 11-11
service state transitions C-7
specifications B-31
temperature range B-7
y-cable description 14-119
TXP_MR_2.5G card
change PM thresholds 10-55
create RMON thresholds 8-28
create y-cable protection 3-33
description 14-94
GCC terminations 3-62
install 3-30
modify line settings 10-55
monitor performance 8-15
port state transitions C-11
power requirements B-6
put ports out of service 11-14
reset 11-11
service state transitions C-7
specifications B-35
temperature range B-7
y-cable description 14-119
TXPP_MR_2.5G card
see also splitter protection
change PM thresholds 10-55
create RMON thresholds 8-28
description 14-94
GCC terminations 3-62
install 3-30
modify line settings 10-55
monitor performance 8-15

port state transitions C-11
power requirements B-6
put ports out of service 11-14
reset 11-11
service state transitions C-7
specifications B-35
temperature range B-7

U

UNIX
connect cable to ONS 15454 2-24
CTC installation wizard 2-6
disable proxy service 2-21
set up craft connection to ONS 15454 2-18
software installation description 17-3
workstation requirements 17-4
unpack 1-6
user data channel
delete 6-18
description 14-20
provision 6-16
user-defined alarms
see external alarms
see external controls
users
see also security
change password or security settings 9-38
create new user on a single node 3-4
create new users on multiple nodes 3-4
delete 9-39, 9-40
log out 9-40, 9-41
security level definitions 18-1
set up 3-3

V

variable optical attenuator *see* automatic node setup 3-58
views
see card view
see network view
see node view
virtual links *see* provisionable patchcords
virtual link table (OSPF) 3-17
virtual wires 20-14
VOA 15-15, 15-16, 15-19
voltage, measure 1-79
voltmeter 1-40, 1-79

W

WAN 19-1
WINS configuration 2-11, 2-14, 2-16, 2-20
wires
install alarm wires 1-48, 1-53
install LAN wires 1-52, 1-57
install timing wires 1-51, 1-56
install TL1 craft interface wires 1-58
wire-wrap panel, external 1-59
wizard, installation 2-3, 2-6

Y

y-cable protection
delete 9-22
description 13-10, 14-119
install FlexLayer modules 1-69
install FlexLayer shelf 1-69
modify 9-21
y-cable protection modules 1-71