Telco and ISP Dial Scenarios and Configurations

This chapter provides sample hardware and software configurations for specific dial scenarios used by telcos, Internet service providers (ISPs), regional bell operating companies (RBOCs), inter-exchange carriers (IXCs), and other service providers. Each configuration in this chapter is designed to enable IP network traffic with basic security authentication.

The following scenarios are described:

- Scenario 1—Small to Medium Scale POPs
- Scenario 2—Large Scale POPs
- Scenario 3—PPP Calls over X.25 Networks
- Scenario 4—Virtual Private Dial Networks

Note In all of these example scenarios, you can replace the Cisco AS5200 access server with a Cisco AS5300, Cisco AS5800, or Cisco AccessPath. This hardware exchange provides higher call density performance and increases the number of PRI interfaces and modem ports on each chassis.

Small to Medium Scale POPs

Many small to medium sized ISPs configure one or two access servers to provide dial-in access for their customers. Many of these dial-in customers use individual remote PCs that are not connected to local-area networks (LANs). Using the Windows 95 dial-up software, remote clients initiate analog or digital connections using modems or home office ISDN BRI terminal adapters.

This section provides three types of single user dial-in scenarios for service providers:

- Individual Remote PCs Using Analog Modems
- Individual PCs Using ISDN Terminal Adapters
- Mixture of ISDN and Analog Modem Calls

Note Be sure to include your own IP addresses, host names, and security passwords where appropriate. The following sample configurations assume that the dial-in clients are individual PCs running PPP, connecting to an IP network, and requiring only basic security authentication.

Individual Remote PCs Using Analog Modems

ISPs can configure a single Cisco AS5200 to receive analog calls from remote PCs connected to modems, as shown in Figure 328. The point of presence (POP) at the ISP central site could also be a Cisco 2511 access server connected to external modems.

Network Topology

The following figure is for a small-scale dial-in scenario using modems.

Figure 328 Remote PC Using an Analog Modem to Dial In to a Cisco AS5200

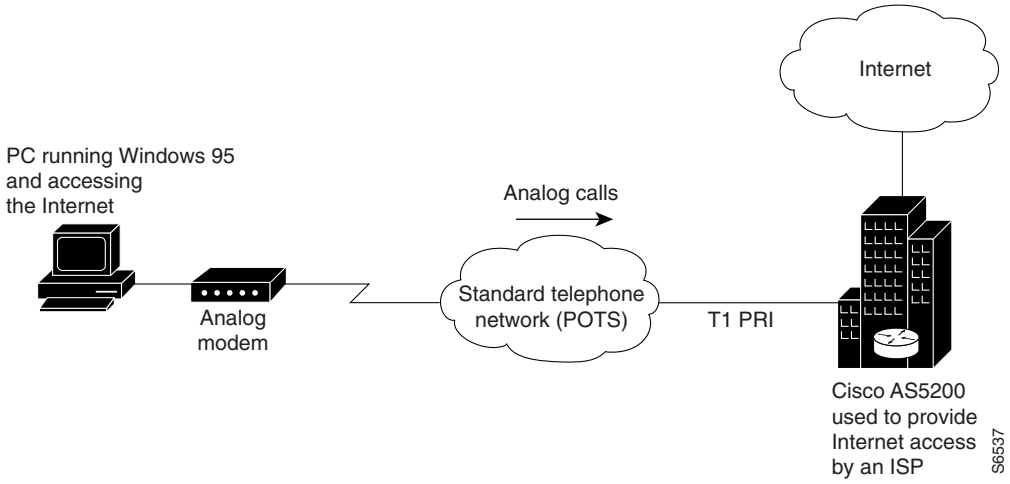

Running Configuration for ISDN PRI

The following sample configuration runs on the Cisco AS5200, as shown in Figure 328, which enables remote analog users to dial in:

```
!
version 11.2
service timestamps debug datetime msec
service timestamps log datetime msec
service password-encryption
no service udp-small-servers
no service tcp-small-servers
!
hostname NAS
!
aaa new-model
aaa authentication login console enable
aaa authentication login vty tacacs+
aaa authentication login dialin tacacs+
aaa authentication ppp default tacacs+
aaa authentication ppp dialin if-needed tacacs+
enable secret cisco
!
async-bootp dns-server 10.1.3.1 10.1.3.2
isdn switch-type primary-5ess
!
```

```
controller T1 0
 framing esf
 clock source line primary
 linecode b8zs
 pri-group timeslots 1-24
!
controller T1 1
 framing esf
 clock source line secondary
 linecode b8zs
 pri-group timeslots 1-24
!
interface Loopback0
 ip address 10.1.2.254 255.255.255.0
!
interface Ethernet0
 ip address 10.1.1.10 255.255.255.0
 ip summary address eigrp 10 10.1.2.0 255.255.255.0
!
interface Serial0
 no ip address
 shutdown
!
interface Serial1
 no ip address
 shutdown
!
interface Serial0:23
 no ip address
 encapsulation ppp
 isdn incoming-voice modem
!
interface Serial1:23
 no ip address
 isdn incoming-voice modem
!
interface Group-Async1
 ip unnumbered Loopback0
 encapsulation ppp
 async mode interactive
 peer default ip address pool dialin_pool
 no cdp enable
 ppp authentication chap pap dialin
 group-range 1 48
!
router eigrp 10
 network 10.0.0.0
 passive-interface Dialer0
 no auto-summary
!
ip local pool dialin_pool 10.1.2.1 10.1.2.50
ip default-gateway 10.1.1.1
ip classless
!
dialer-list 1 protocol ip permit
!
line con 0
 login authentication console
line 1 48
 autoselect ppp
 autoselect during-login
 login authentication dialin
 modem DialIn
line aux 0
 login authentication console
```

```
line vty 0 4
 login authentication vty
 transport input telnet rlogin
!
end
```

Some service providers use a remote TACACS+ or RADIUS security server in this dial-in scenario. The following example shows a TACACS+ entry that appears in a remote security server's configuration file.

```
user = PCuser1 {
            login = cleartext "dialpass1"
            chap = cleartext "dialpass1"
            service = ppp protocol = ip {
                        addr-pool = dialin_pool
            }
            service = exec {
                        autocmd = "ppp negotiate"
            }
}


user = PCuser2 {
            login = cleartext "dialpass2"
            chap = cleartext "dialpass2"
            service = ppp protocol = ip {
                        addr-pool = dialin_pool
            }
            service = exec {
                        autocmd = "ppp negotiate"
            }
}


user = PCuser3 {
            login = cleartext "dialpass3"
            chap = cleartext "dialpass3"
            service = ppp protocol = ip {
                        addr-pool = dialin_pool
            }
            service = exec {
                        autocmd = "ppp negotiate"
            }
}
```

Running Configuration for Robbed Bit Signaling

The following configuration is for a single Cisco AS5200 to support remote client PCs dialing in with analog modems over traditional T1 lines. Digital ISDN calls do not transmit across these older types of channelized lines. The configuration assumes that the client can dial in and connect to the router in either terminal emulation mode (text only) or PPP packet mode.

Note The following configuration works only for analog modem calls. It includes no serial D channel configuration (Serial 0:23 and Serial 1:23).

```
!
version 11.2
service timestamps debug datetime msec
service timestamps log datetime msec
service password-encryption
no service udp-small-servers
no service tcp-small-servers
!
hostname NAS
!
aaa new-model
aaa authentication login console enable
aaa authentication login vty tacacs+
aaa authentication login dialin tacacs+
aaa authentication ppp default tacacs+
aaa authentication ppp dialin if-needed tacacs+
enable secret cisco
!
async-bootp dns-server 10.1.3.1 10.1.3.2
isdn switch-type primary-5ess
!
controller T1 0
 framing esf
 clock source line primary
 linecode b8zs
 cas-group 0 timeslots 1-24 type e&m-fgb
!
controller T1 1
 framing esf
 clock source line secondary
 linecode b8zs
 cas-group 0 timeslots 1-24 type e&m-fgb
!
interface Loopback0
 ip address 10.1.2.254 255.255.255.0
!
interface Ethernet0
 ip address 10.1.1.10 255.255.255.0
 ip summary address eigrp 10 10.1.2.0 255.255.255.0
!
interface Serial0
 no ip address
 shutdown
!
interface Serial1
 no ip address
 shutdown
!
!
interface Group-Async1
 ip unnumbered Loopback0
 encapsulation ppp
 async mode interactive
 peer default ip address pool dialin_pool
 no cdp enable
 ppp authentication chap pap dialin
 group-range 1 48
!
router eigrp 10
 network 10.0.0.0
 passive-interface Dialer0
 no auto-summary
!
ip local pool dialin_pool 10.1.2.1 10.1.2.50
ip default-gateway 10.1.1.1
```

```
ip classless
!
dialer-list 1 protocol ip permit
!
line con 0
 login authentication console
line 1 48
 autoselect ppp
 autoselect during-login
 login authentication dialin
 modem DialIn
line aux 0
 login authentication console
line vty 0 4
 login authentication vty
 transport input telnet rlogin
!
end
```

Individual PCs Using ISDN Terminal Adapters

ISPs can configure a single Cisco AS5200 to receive digital multilink calls from remote PCs connected to terminal adapters, as shown in Figure 329. The point of presence at the ISP's central site can be any Cisco router that supports ISDN PRI, such as the Cisco 4700-M loaded with a channelized T1 PRI network module.

Network Topology

The following figure is for a small-scale dial-in scenario using terminal adapters.

Figure 329 Remote PC Using a Terminal Adapter to Dial In to a Cisco AS5200

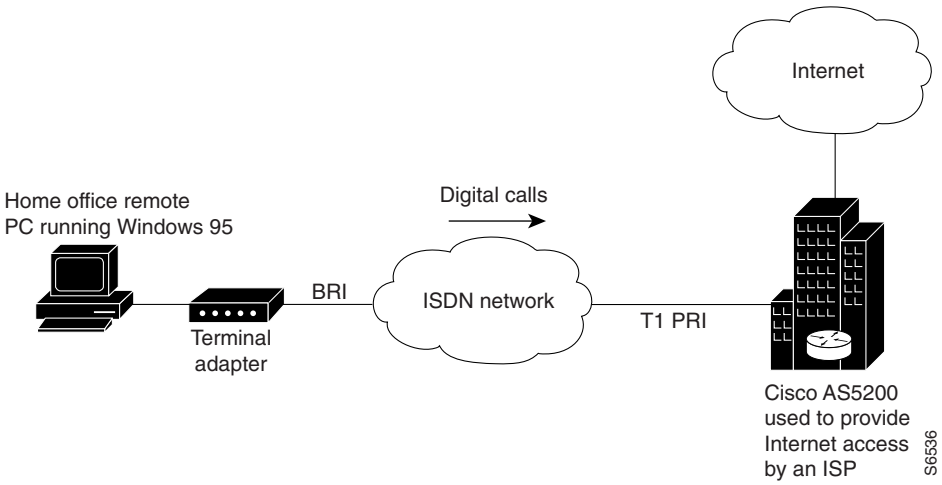

To configure one Cisco AS5200 to accept both incoming ISDN and analog calls from individual terminal adapters and modems, refer to the section "Mixture of ISDN and Analog Modem Calls."

Running Configuration

The following example configures a Cisco AS5200 to enable PCs fitted with internal or external terminal adaptors to dial in to an IP network. The terminal adapter configuration is set up for asynchronous to synchronous PPP conversion. In some cases, PPP authentication must be set up for the Password Authentication Protocol (PAP). Some terminal adapters only support PAP authentication.

```
!
version 11.2
service timestamps debug datetime msec
service timestamps log datetime msec
service password-encryption
no service udp-small-servers
no service tcp-small-servers
!
hostname NAS
!
aaa new-model
aaa authentication login console enable
aaa authentication login vty tacacs+
aaa authentication login dialin tacacs+
aaa authentication ppp default tacacs+
aaa authentication ppp dialin if-needed tacacs+
enable secret cisco
!
async-bootp dns-server 10.1.3.1 10.1.3.2
isdn switch-type primary-5ess
!
controller T1 0
 framing esf
 clock source line primary
 linecode b8zs
 pri-group timeslots 1-24
!
controller T1 1
 framing esf
 clock source line secondary
 linecode b8zs
 pri-group timeslots 1-24
!
interface Loopback0
 ip address 10.1.2.254 255.255.255.0
!
interface Ethernet0
 ip address 10.1.1.10 255.255.255.0
 ip summary address eigrp 10 10.1.2.0 255.255.255.0
!
interface Serial0
 no ip address
 shutdown
!
interface Serial1
 no ip address
 shutdown
!
interface Serial0:23
 no ip address
 encapsulation ppp
 dialer rotary-group 0
 dialer-group 1
 no fair-queue
 no cdp enable
!
```

```
interface Serial1:23
 no ip address
 encapsulation ppp
 dialer rotary-group 0
 dialer-group 1
 no fair-queue
 no cdp enable
!
interface Dialer0
 ip unnumbered Loopback0
 no ip mroute-cache
 encapsulation ppp
 peer default ip address pool dialin_pool
 dialer in-band
 dialer-group 1
 no fair-queue
 no cdp enable
 ppp authentication chap pap dialin
 ppp multilink
!
router eigrp 10
 network 10.0.0.0
 passive-interface Dialer0
 no auto-summary
!
ip local pool dialin_pool 10.1.2.1 10.1.2.50
ip default-gateway 10.1.1.1
ip classless
!
!
!
dialer-list 1 protocol ip permit
!
line con 0
 login authentication console
line 1 48
 autoselect ppp
 autoselect during-login
 login authentication dialin
 modem DialIn
line aux 0
 login authentication console
line vty 0 4
 login authentication vty
 transport input telnet rlogin
!
end
```

Mixture of ISDN and Analog Modem Calls

ISPs can configure a single Cisco AS5200 to receive calls from a mixture of remote PCs connected to terminal adapters and modems, as shown in Figure 330.

Network Topology

In this scenario, the Cisco AS5200 is used as a hybrid access server, which is its primary network application.

Figure 330 Remote PCs Making Digital Calls and Analog Calls to a Cisco AS5200

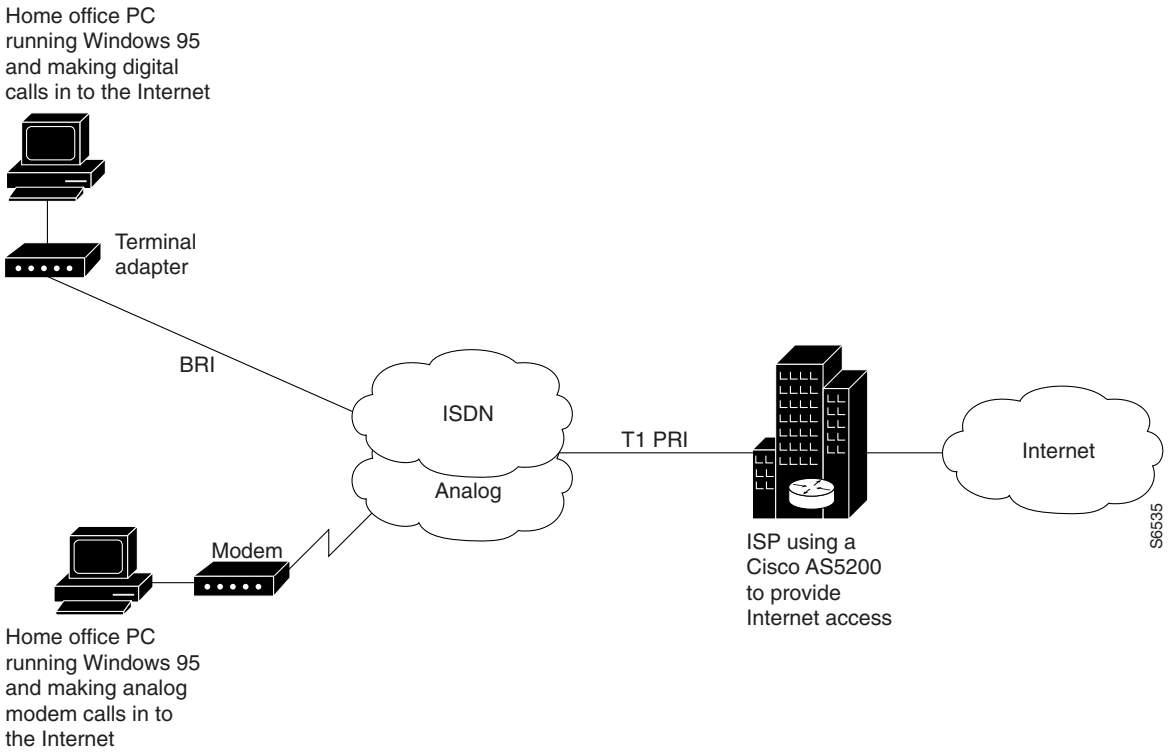

Running Configuration

The following configuration is a combination of the modem and ISDN dial-in configurations. Using the bearer capability information element in the call setup packet, the incoming calls are labeled as data or voice. After the calls enter the access server, they are routed either to the serial configuration or to the modems and group asynchronous configuration.

Note This configuration assumes that only individual remote PCs are dialing in; no remote routers are dialing in. For a remote router dial-in configuration, refer to the chapter "Enterprise Dial Scenarios and Configurations."

```
!
version 11.2
service timestamps debug datetime msec
service timestamps log datetime msec
service password-encryption
no service udp-small-servers
no service tcp-small-servers
!
hostname NAS
!
aaa new-model
aaa authentication login console enable
aaa authentication login vty tacacs+
aaa authentication login dialin tacacs+
aaa authentication ppp default tacacs+
aaa authentication ppp dialin if-needed tacacs+
enable secret cisco
```

```
!
async-bootp dns-server 10.1.3.1 10.1.3.2
isdn switch-type primary-5ess
!
controller T1 0
 framing esf
 clock source line primary
 linecode b8zs
 pri-group timeslots 1-24
!
controller T1 1
 framing esf
 clock source line secondary
 linecode b8zs
 pri-group timeslots 1-24
!
interface Loopback0
 ip address 10.1.2.254 255.255.255.0
!
interface Ethernet0
 ip address 10.1.1.10 255.255.255.0
 ip summary address eigrp 10 10.1.2.0 255.255.255.0
!
interface Serial0
 no ip address
 shutdown
!
interface Serial1
 no ip address
 shutdown
!
interface Serial0:23
 no ip address
 encapsulation ppp
 isdn incoming-voice modem
 dialer rotary-group 0
 dialer-group 1
 no fair-queue
 no cdp enable
!
interface Serial1:23
 no ip address
 encapsulation ppp
 isdn incoming-voice modem
 dialer rotary-group 0
 dialer-group 1
 no fair-queue
 no cdp enable
!
interface Group-Async1
 ip unnumbered Loopback0
 encapsulation ppp
 async mode interactive
 peer default ip address pool dialin_pool
 no cdp enable
 ppp authentication chap pap dialin
 group-range 1 48
!
interface Dialer0
 ip unnumbered Loopback0
 no ip mroute-cache
 encapsulation ppp
 peer default ip address pool dialin_pool
 dialer in-band
 dialer-group 1
```

```
 no fair-queue
 no cdp enable
 ppp authentication chap pap dialin
 ppp multilink
!
router eigrp 10
 network 10.0.0.0
 passive-interface Dialer0
 no auto-summary
!
ip local pool dialin_pool 10.1.2.1 10.1.2.50
ip default-gateway 10.1.1.1
ip classless
!
dialer-list 1 protocol ip permit
!
line con 0
 login authentication console
line 1 48
 autoselect ppp
 autoselect during-login
 login authentication dialin
 modem DialIn
line aux 0
 login authentication console
line vty 0 4
 login authentication vty
 transport input telnet rlogin
end
```

Large Scale POPs

This section describes how to set up a stack of access servers for a large-scale dial solution:

- Scaling Considerations
- How Stacking Works
- Running Configurations

Scaling Considerations

Because of the significant increase in demand for Internet access, large points of presences (POPs) are required by many Telcos and ISPs. Internet access configurations can be set up to enable users dialing in with individual computers to make mixed ISDN multilink or modem connections using a stack of Cisco AS5200 universal access servers running Multichassis Multilink PPP (MMP).

You must consider scalability and call density issues when designing a large scale dial-in POP. Because access servers have physical limitations, such as how many dial-in users can be supported on one device, you should consider the conditions and recommendations described in Table 39.

Table 39 Recommended Configurations for Different Remote Access Needs

Dial-in Demand You Need to Support	Recommended Configuration
PCs dialing in, 75 to 90% modem calls, 10 to 25% ISDN calls (terminal adapters or routers), and support for less than 96 (T1) to 116 (E1) simultaneous dial-in connections.	Two Cisco AS5200s configured for IP, basic security, MMP, L2F, and no offload server.

Dial-in Demand You Need to Support	Recommended Configuration
PCs dialing in, less than 50% modem calls, more than 50% ISDN calls (terminal adapters or routers), dial-in only, and 250 or more simultaneous links into the offload server.	Three or more Cisco AS5200s configured for IP, remote security, MMP, and L2F. Each Cisco AS5200 is configured to offload its segmentation and reassembly of the multilink sessions onto an offload server, such as a Cisco 7202 or Cisco 4700.

Note Depending on the size of your POP requirement, you can replace the Cisco AS5200 access server with a Cisco AS5300, Cisco AS5800, or Cisco AccessPath. This hardware exchange provides higher call density performance and increases the number of ISDN PRI ports, channelized ports, and modem ports on each chassis.

How Stacking Works

Before you install and configure a stack of access servers, you should understand the following basic concepts and how they work together in a large scale dial-in solution:

- A Typical Multilink PPP Session
- Using Multichassis Multilink PPP
- Setting Up an Offload Server
- Using the Stack Group Bidding Protocol
- Using Layer 2 Forwarding

A Typical Multilink PPP Session

A basic multilink session is an ISDN connection between two routing devices, such as a Cisco 766 and a Cisco AS5200. Figure 331 shows a remote PC connecting to a Cisco 766 ISDN router, which in turn opens two B-channel connections at 128 kbps across an ISDN network. The multilink PPP session is brought up. The Cisco 766 sends four packets across the network to the Cisco AS5200, which in turn reassembles the packets back into the correct order and sends them out the LAN port to the Internet.

Figure 331 A Typical Multilink PPP Session

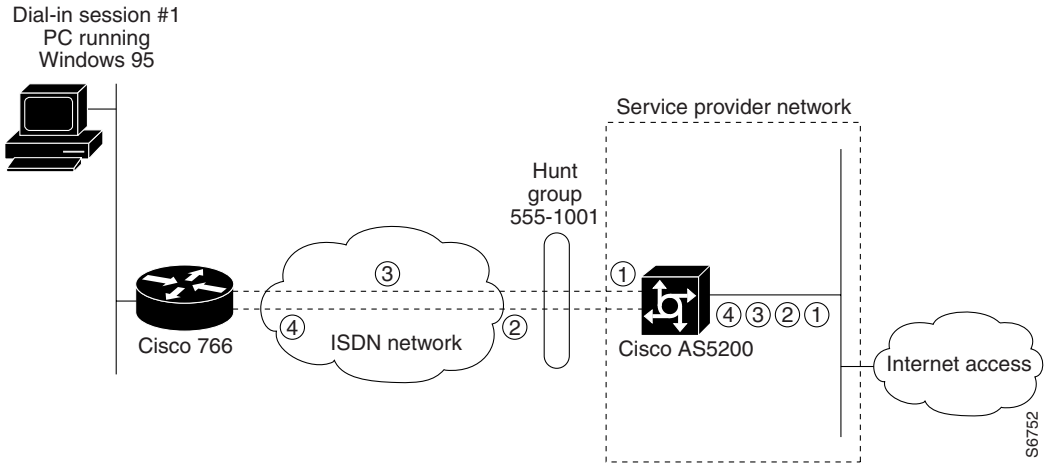

Using Multichassis Multilink PPP

The dial solution becomes more complex when the scenario is scaled to include multiple multilink calls connecting across multiple chassis. Figure 332 shows a terminal adapter making a call in to the Cisco AS5200, labeled #1. However, only one of the access server's 48-B channels is available to accept the call. The other channels are busy with calls. As a result, one of the terminal adapter's two B-channels is redirected to device #2. At this point, a multilink multichassis session is shared between two Cisco AS5200s that belong to the same stack group. Packet fragments A and C go to device #1. Packet fragments B and D go to device #2.

Because device #1 is the first access server to receive a packet and establish a link, this access server creates a virtual interface and becomes the bundlemaster. The bundlemaster takes ownership of the multilink PPP session with the remote device. The Multichassis Multilink PPP protocol forwards the second link from device #2 to the bundlemaster, which in turn bundles the two B channels together and provides 128 kbps to the end user. Layer 2 forwarding (L2F) is the mechanism that device #2 uses to forward all packet fragments received from the terminal adapter to device #1. In this way, all packets and calls virtually appear to terminate at device #1.

Figure 332 A Stack Group of Access Servers Using MMP without an Offload Processor

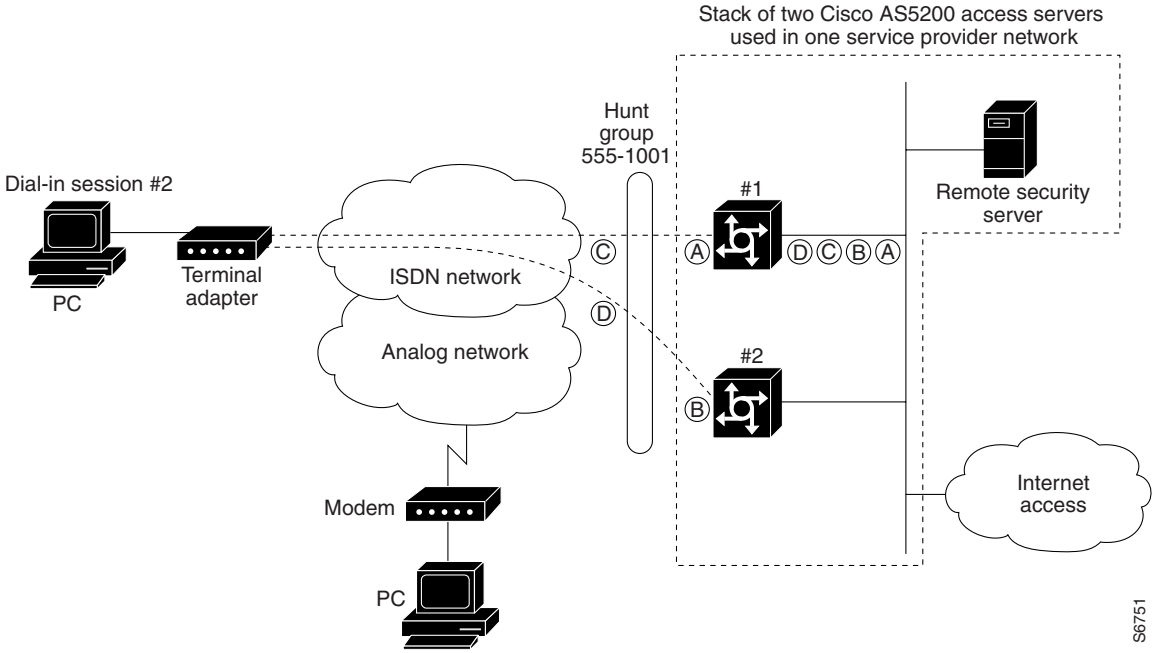

Setting Up an Offload Server

Because MMP is a processor-intensive application, you might need to offload the processing or segmentation and reassembly from the Cisco AS5200s to a router with a higher CPU, such as the Cisco 4700-M or Cisco 7206. We recommend you include an offload server for dial-in solutions that support more than 50% ISDN calls or more than 10 multilink sessions per Cisco AS5200. (See Figure 333.)

Figure 333 A Stack Group of Access Servers Using MMP with an Offload Processor

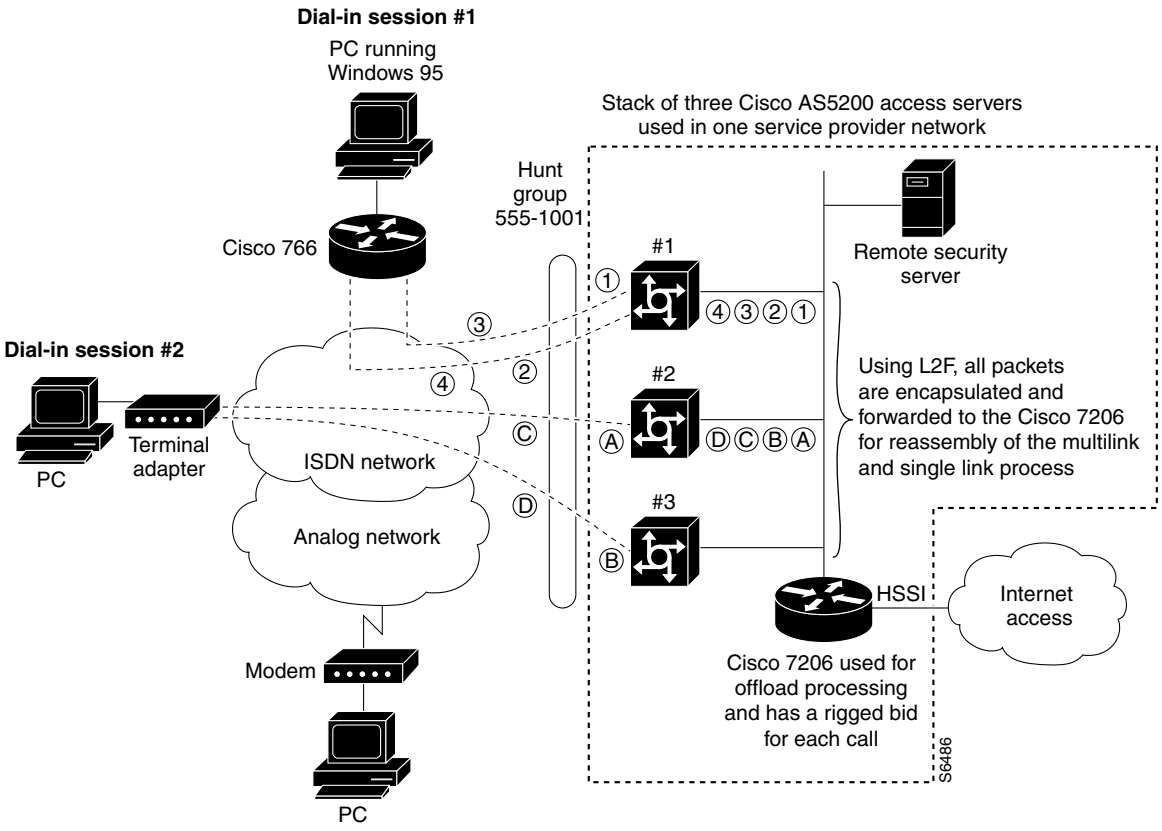

Using the Stack Group Bidding Protocol

The Stack Group Bidding Protocol (SGBP) is a critical component used in multichassis multilink sessions. The SGBP unites each Cisco AS5200 in a virtual stack, which enables the access servers to become virtually tied together. Each independent stack member communicates with the other members and determines which device's CPU should be in charge of running the multilink session and packet reassembly—the bundlemaster's duty. The goal of SGBP is to find a common place to forward the links and ensure that this destination has enough CPU to perform the segmentation and packet reassembly. (See Figure 333.)

When SGBP in configured on each Cisco AS5200, each access server sends out a query to each stack group member stating, for example, "I have a call coming in from walt@options.com. What is your bid for this user?" Each access server then consults the following default bidding criteria and answers the query accordingly:

1. Do I have an existing call or link for the user walt@options.com? If I do, then bid very high to get this second link in to me.
2. If I do not have an existing call for walt@options.com, then bid a value that is proportional to how much CPU I have available.
3. How busy am I supporting other users?

Note An offload server will always serve as the bundlemaster by bidding a higher value than the other devices.

Using Layer 2 Forwarding

Layer 2 forwarding (L2F) is a critical component used in multichassis multilink sessions. If an access server is not in charge of a multilink session, the access server encapsulates the fragmented PPP frames and forwards them to the bundlemaster using L2F. The master device receives the calls, not through the dial port (such as a dual T1/PRI card), but through the LAN or Ethernet port. L2F simply tunnels packet fragments to the device that owns the multilink session for the call. If you include an offload server in your dial-in scenario, it creates all the virtual interfaces, owns all the multilink sessions, and reassembles all the fragmented packets received by L2F via the other stackgroup members. (See Figure 333.)

Running Configurations

This section provides sample running configurations for the devices shown in Figure 333.

- Cisco AS5200 #1 Example
- Cisco AS5200 #2 Example
- Cisco AS5200 #3 Example
- Cisco 7206 Example
- RADIUS Remote Security Examples

Note Be sure to include your own IP addresses, host names, and security passwords where appropriate.

Cisco AS5200 #1 Example

The following configuration runs on the Cisco AS5200 labeled #1, which is shown in Figure 333:

```
!
version 11.2
service timestamps debug datetime msec
service timestamps log datetime msec
service password-encryption
no service udp-small-servers
no service tcp-small-servers
!
hostname AS5200-1
!
aaa new-model
aaa authentication login default local
aaa authentication login console enable
aaa authentication login vty local
aaa authentication login dialin radius
aaa authentication ppp default local
aaa authentication ppp dialin if-needed radius
aaa authorization exec local radius
aaa authorization network radius
aaa accounting network start-stop radius
aaa accounting exec start-stop radius
enable secret cisco
```

```
!
username admin password cisco
username MYSTACK password STACK-SECRET
sgbp group MYSTACK
sgbp member AS5200-2 10.1.1.12
sgbp member AS5200-3 10.1.1.13
sgbp member 7200 10.1.1.14
async-bootp dns-server 10.1.3.1 10.1.3.2
isdn switch-type primary-5ess
!
controller T1 0
 framing esf
 clock source line primary
 linecode b8zs
 pri-group timeslots 1-24
!
controller T1 1
 framing esf
 clock source line secondary
 linecode b8zs
 pri-group timeslots 1-24
!
interface Loopback0
 ip address 10.1.2.62 255.255.255.192
!
interface Ethernet0
 ip address 10.1.1.11 255.255.255.0
 ip summary address eigrp 10 10.1.2.0 255.255.255.192
!
interface Serial0
 no ip address
 shutdown
!
interface Serial1
 no ip address
 shutdown
!
interface Serial0:23
 no ip address
 encapsulation ppp
 isdn incoming-voice modem
 dialer rotary-group 0
 dialer-group 1
 no fair-queue
 no cdp enable
!
interface Serial1:23
 no ip address
 encapsulation ppp
 isdn incoming-voice modem
 dialer rotary-group 0
 dialer-group 1
 no fair-queue
 no cdp enable
!
interface Group-Async1
 ip unnumbered Loopback0
 encapsulation ppp
 async mode interactive
 peer default ip address pool dialin_pool
 no cdp enable
 ppp authentication chap pap dialin
 group-range 1 48
!
```

```
interface Dialer0
 ip unnumbered Loopback0
 no ip mroute-cache
 encapsulation ppp
 peer default ip address pool dialin_pool
 dialer in-band
 dialer-group 1
 no fair-queue
 no cdp enable
 ppp authentication chap pap dialin
 ppp multilink
!
router eigrp 10
 network 10.0.0.0
 passive-interface Dialer0
 no auto-summary
!
ip local pool dialin_pool 10.1.2.1 10.1.2.50
ip default-gateway 10.1.1.1
ip classless
!
!
!
dialer-list 1 protocol ip permit
radius-server host 10.1.1.23 auth-port 1645 acct-port 1646
radius-server host 10.1.1.24 auth-port 1645 acct-port 1646
radius-server key cisco
!
line con 0
 login authentication console
line 1 48
 autoselect ppp
 autoselect during-login
 login authentication dialin
 modem DialIn
line aux 0
 login authentication console
line vty 0 4
 login authentication vty
 transport input telnet rlogin
!
end
```

Cisco AS5200 #2 Example

The following configuration runs on the Cisco AS5200 labeled #2, which is shown in Figure 333:

```
!
version 11.2
service timestamps debug datetime msec
service timestamps log datetime msec
service password-encryption
no service udp-small-servers
no service tcp-small-servers
!
hostname AS5200-2
!
aaa new-model
aaa authentication login default local
aaa authentication login console enable
aaa authentication login vty local
aaa authentication login dialin radius
aaa authentication ppp default local
aaa authentication ppp dialin if-needed radius
```

```
aaa authorization exec local radius
aaa authorization network radius
aaa accounting network start-stop radius
aaa accounting exec start-stop radius
enable secret cisco
!
username admin password cisco
username MYSTACK password STACK-SECRET
sgbp group MYSTACK
sgbp member AS5200-1 10.1.1.11
sgbp member AS5200-3 10.1.1.13
sgbp member 7200 10.1.1.14
async-bootp dns-server 10.1.3.1 10.1.3.2
isdn switch-type primary-5ess
!
controller T1 0
 framing esf
 clock source line primary
 linecode b8zs
 pri-group timeslots 1-24
!
controller T1 1
 framing esf
 clock source line secondary
 linecode b8zs
 pri-group timeslots 1-24
!
interface Loopback0
 ip address 10.1.2.126 255.255.255.192
!
interface Ethernet0
 ip address 10.1.1.12 255.255.255.0
 ip summary address eigrp 10 10.1.2.64 255.255.255.192
!
interface Serial0
 no ip address
 shutdown
!
interface Serial1
 no ip address
 shutdown
!
interface Serial0:23
 no ip address
 encapsulation ppp
 isdn incoming-voice modem
 dialer rotary-group 0
 dialer-group 1
 no fair-queue
 no cdp enable
!
interface Serial1:23
 no ip address
 encapsulation ppp
 isdn incoming-voice modem
 dialer rotary-group 0
 dialer-group 1
 no fair-queue
 no cdp enable
```

```
!
interface Group-Async1
 ip unnumbered Loopback0
 encapsulation ppp
 async mode interactive
 peer default ip address pool dialin_pool
 no cdp enable
 ppp authentication chap pap dialin
 group-range 1 48
!
interface Dialer0
 ip unnumbered Loopback0
 no ip mroute-cache
 encapsulation ppp
 peer default ip address pool dialin_pool
 dialer in-band
 dialer-group 1
 no fair-queue
 no cdp enable
 ppp authentication chap pap dialin
 ppp multilink
!
router eigrp 10
 network 10.0..0.0
 passive-interface Dialer0
 no auto-summary
!
ip local pool dialin_pool 10.1.2.65 10.1.2.114
ip default-gateway 10.1.1.1
ip classless
!
dialer-list 1 protocol ip permit
radius-server host 10.1.1.23 auth-port 1645 acct-port 1646
radius-server host 10.1.1.24 auth-port 1645 acct-port 1646
radius-server key cisco
!
line con 0
 login authentication console
line 1 48
 autoselect ppp
 autoselect during-login
 login authentication dialin
 modem DialIn
line aux 0
 login authentication console
line vty 0 4
 login authentication vty
 transport input telnet rlogin
!
end
```

Cisco AS5200 #3 Example

The following configuration runs on the Cisco AS5200 labeled #3, which is shown in Figure 333:

```
!
version 11.2
service timestamps debug datetime msec
service timestamps log datetime msec
service password-encryption
no service udp-small-servers
no service tcp-small-servers
!
hostname AS5200-3
```

```
!
aaa new-model
aaa authentication login default local
aaa authentication login console enable
aaa authentication login vty local
aaa authentication login dialin radius
aaa authentication ppp default local
aaa authentication ppp dialin if-needed radius
aaa authorization exec local radius
aaa authorization network radius
aaa accounting network start-stop radius
aaa accounting exec start-stop radius
enable secret cisco
!
username admin password cisco
username MYSTACK password STACK-SECRET
sgbp group MYSTACK
sgbp member AS5200-1 10.1.1.11
sgbp member AS5200-2 10.1.1.12
sgbp member 7200 10.1.1.14
async-bootp dns-server 10.1.3.1 10.1.3.2
isdn switch-type primary-5ess
!
controller T1 0
 framing esf
 clock source line primary
 linecode b8zs
 pri-group timeslots 1-24
!
controller T1 1
 framing esf
 clock source line secondary
 linecode b8zs
 pri-group timeslots 1-24
!
interface Loopback0
 ip address 10.1.2.190 255.255.255.192
!
interface Ethernet0
 ip address 10.1.1.13 255.255.255.0
 ip summary address eigrp 10 10.1.2.128 255.255.255.192
!
interface Serial0
 no ip address
 shutdown
!
interface Serial1
 no ip address
 shutdown
!
interface Serial0:23
 no ip address
 encapsulation ppp
 isdn incoming-voice modem
 dialer rotary-group 0
 dialer-group 1
 no fair-queue
 no cdp enable
!
interface Serial1:23
 no ip address
 encapsulation ppp
 isdn incoming-voice modem
 dialer rotary-group 0
 dialer-group 1
```

```
 no fair-queue
 no cdp enable
!
interface Group-Async1
 ip unnumbered Loopback0
 encapsulation ppp
 async mode interactive
 peer default ip address pool dialin_pool
 no cdp enable
 ppp authentication chap pap dialin
 group-range 1 48
!
interface Dialer0
 ip unnumbered Loopback0
 no ip mroute-cache
 encapsulation ppp
 peer default ip address pool dialin_pool
 dialer in-band
 dialer-group 1
 no fair-queue
 no cdp enable
 ppp authentication chap pap dialin
 ppp multilink
!
router eigrp 10
 network 10.0.0.0
 passive-interface Dialer0
 no auto-summary
!
ip local pool dialin_pool 10.1.2.129 10.1.2.178
ip default-gateway 10.1.1.1
ip classless
!
dialer-list 1 protocol ip permit
radius-server host 10.1.1.23 auth-port 1645 acct-port 1646
radius-server host 10.1.1.24 auth-port 1645 acct-port 1646
radius-server key cisco
!
line con 0
 login authentication console
line 1 48
 autoselect ppp
 autoselect during-login
 login authentication dialin
 modem DialIn
line aux 0
 login authentication console
line vty 0 4
 login authentication vty
 transport input telnet rlogin
!
end
```

Cisco 7206 Example

The following configuration runs on the Cisco 7206 router, which is shown in Figure 333.

Note Any Cisco router that has a strong CPU can be used as an offload server, such as a Cisco 4500-M, 4700-M, or 3640. However, the router must be configured to handle the necessary processing overhead demanded by each stack member.

```
!
version 11.2
service timestamps debug datetime msec
service timestamps log datetime msec
service password-encryption
no service udp-small-servers
no service tcp-small-servers
!
hostname 7200
!
aaa new-model
aaa authentication login default local
aaa authentication login console enable
aaa authentication login vty local
aaa authentication login dialin radius
aaa authentication ppp default local
aaa authentication ppp dialin if-needed radius
aaa authorization exec local radius
aaa authorization network radius
aaa accounting network start-stop radius
aaa accounting exec start-stop radius
enable secret cisco
!
username MYSTACK password STACK-SECRET
username admin password cisco
multilink virtual-template 1
sgbp group MYSTACK
sgbp member AS5200-1 10.1.1.11
sgbp member AS5200-2 10.1.1.12
sgbp member AS5200-3 10.1.1.13
sgbp seed-bid offload
async-bootp dns-server 10.1.3.1 10.1.3.2
!
interface Loopback0
 ip address 10.1.2.254 255.255.255.192
!
interface Ethernet2/0
 ip address 10.1.1.14 255.255.255.0
 ip summary address eigrp 10 10.1.2.192 255.255.255.192
!
interface Ethernet2/1
 no ip address
 shutdown
!
interface Ethernet2/2
 no ip address
 shutdown
!
interface Ethernet2/3
 no ip address
 shutdown
!
```

```
interface Virtual-Template1
 ip unnumbered Loopback0
 no ip mroute-cache
 peer default ip address pool dialin_pool
 ppp authentication chap pap dialin
 ppp multilink
!
router eigrp 10
 network 10.0.0.0
 passive-interface Virtual-Template1
 no auto-summary
!
ip local pool dialin_pool 10.1.2.193 10.1.2.242
ip default-gateway 10.1.1.1
ip classless
!
radius-server host 10.1.1.23 auth-port 1645 acct-port 1646
radius-server host 10.1.1.24 auth-port 1645 acct-port 1646
radius-server key cisco
!
line con 0
 login authentication console
line aux 0
 login authentication console
line vty 0 4
 login authentication vty
!
end
```

RADIUS Remote Security Examples

The following RADIUS examples use the IETF syntax for the attributes. Depending on how the dictionary is set up, the syntax for these configurations might differ between versions of RADIUS daemons.

Note You must have the **async dynamic address** command enabled on the network access server if you use Framed-IP-Address to statically assign IP addresses.

Example 1

The following example shows a user setup for PPP. The user's IP address comes from the configured default IP address that is set up on the interface (which could be a specific default IP address, a pointer to a local pool of addresses, or a pointer to a DHCP server). The special address that signals the default address is 255.255.255.254.

```
pppme Password = "cisco"
        CHAP-Password = "cisco"
        Service-Type = Framed,
        Framed-Protocol = PPP,
        Framed-IP-Address = 255.255.255.254
```

Example 2

The following example shows a user setup for PPP and a static IP address that stays with the user across all connections. Make sure your router is set up to support this configuration, especially for large or multiple POPs.

```
staticallypppme Password = "cisco"
        CHAP-Password = "cisco"
        Service-Type = Framed,
        Framed-Protocol = PPP,
        Framed-IP-Address = 1.1.1.1
```

Example 3

The next example supports a router dialing in, which requires that a static IP address and a remote Ethernet interface be added to the network access server's routing table. The router's WAN port is assigned the address 1.1.1.2. The remote Ethernet interface is 2.1.1.0 with a class C mask. Be sure your routing table can support this requirement. You might need to redistribute the static route with a dynamic routing protocol.

```
routeme Password = "cisco"
        CHAP-Password = "cisco"
        Service-Type = Framed,
        Framed-Protocol = PPP,
        Framed-IP-Address = 1.1.1.1
        Framed-Route = "2.1.1.0/24 1.1.1.2"
```

Example 4

The following example shows a user setup for the SLIP protocol. Remote users are assigned to the default address on the interface.

```
slipme Password = "cisco"
        Service-Type = Framed,
        Framed-Protocol = SLIP,
        Framed-IP-Address = 255.255.255.254
```

Example 5

The following example shows a user setup for SLIP and a static IP address that stays with the user across all connections. Make sure your routing is set up to support this configuration, especially for large or multiple POPs.

```
staticallyslipme Password = "cisco"
        Service-Type = Framed,
        Framed-Protocol = SLIP,
        Framed-IP-Address = 1.1.1.13
```

Example 6

This example automatically Telnets the user to a UNIX host. This configuration is useful for registering new users, providing basic UNIX shell services, or providing a guest account.

```
telnetme Password = "cisco"
        Service-Type = Login,
        Login-Service = Telnet,
        Login-IP-Host = 4.1.1.1
```

Example 7

This example automatically rlogins the user to a UNIX host:

```
rloginme Password = "cisco"
        Service-Type = Login,
        Login-Service = Rlogin,
        Login-IP-Host =4.1.1.2
```

If you want to prevent a second password prompt from being brought up, you must have the following two commands enabled on the router or access server:

- **rlogin trusted-remoteuser-source local**
- **rlogin trusted-localuser-source radius**

PPP Calls over X.25 Networks

Remote PCs stationed in X.25 PAD networks can access the Internet by dialing in to Cisco routers, which support PPP. By positioning a Cisco router at the corner of an X.25 network, ISPs and telcos can provide Internet and PPP access to PAD users. All remote PAD users, who dial in to X.25 networks, dial in to one Cisco router that allows PPP connections. Although connection performance is not optimal, these X.25 to PPP calls utilize installed bases of X.25 equipment and cost less to operate than connecting over the standard telephone network.

Note This dial-in scenario can be used as an enterprise solution too. In this case, an enterprise consults with a third-party service provider that allows enterprises to leverage exiting X.25 enterprise equipment to provide connections back into enterprise environments.

Background

Many cities throughout the world have large installed bases of PCs interfacing with older modems, PADs, and X.25 networks. These remote PCs or terminals dial in to PADs and make X.25 PAD calls or terminal connections to mainframe computers or other devices, which run the X.25 protocol. Unfortunately, the user interface is only a regular text based screen in character mode (as opposed to packet mode). Therefore, many ISPs and telcos who have large investments in X.25 networks are upgrading their outdated equipment and creating separate networks for PPP connections. Because this upgrade process takes significant time and money to complete, using a Cisco router to allow PPP connections over an X.25 network is a good interim solution for a dead-end dial case.

Sample Network Topology

Figure 334 shows a remote PC browsing the Internet through an X.25 PAD call and a Cisco 4500 router. This X.25 network is owned by an ISP or telco who is heavily invested in X.25 equipment, currently upgrading their outdated equipment, and creating separate networks for PPP connections. In this topology, the Cisco 4500 performs protocol translation between the protocols X.25 and PPP. The router is configured to accept an incoming X.25 PAD call, run and unpack PPP packets over the call, and enable the remote PC to function as if it were on the IP network.

Figure 334 Remote PC Browsing the Internet through an X.25 PAD Call and a Cisco 4500

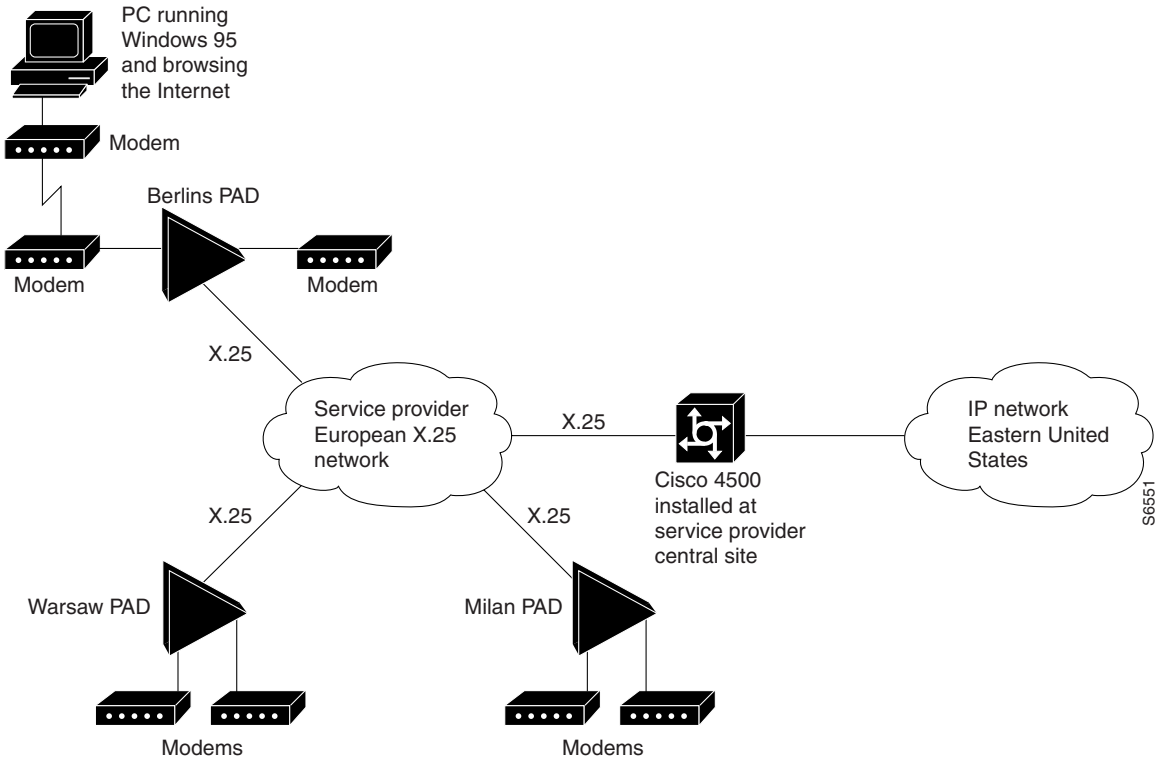

For more information about configuring protocol translation, see the chapter "Configuring Protocol Translation and Virtual Asynchronous Devices."

Running Configuration

In the following example, PAD callers, who dial 4085551234, receive a router prompt. PAD callers who dial 4085555123401 start PPP and pick up an address from the IP pool called dialin_pool. These addresses are "borrowed" from the Ethernet interface on the Cisco 4500. Additionally, you can create a loopback interface network and set the X.25 addresses. However, be sure to run a routing protocol to advertise the loopback interface network if you use this method.

Note Be sure to include your own IP addresses, host names, and security passwords where appropriate

---

```
!
version 11.2
service timestamps debug datetime msec
service timestamps log datetime msec
service password-encryption
no service udp-small-servers
no service tcp-small-servers
!
hostname NAS
!
```

```
aaa new-model
aaa authentication login console enable
aaa authentication login vty tacacs+
aaa authentication login dialin tacacs+
aaa authentication ppp default tacacs+
aaa authentication ppp dialin if-needed tacacs+
enable secret cisco
!
async-bootp dns-server 10.1.3.1 10.1.3.2
!
vty-async
vty-async ppp authentication chap pap
!
interface Loopback0
 ip address 10.1.2.254 255.255.255.0
!
interface Ethernet0
 ip address 10.1.1.10 255.255.255.0
 ip summary address eigrp 10 10.1.2.0 255.255.255.0
!
interface Serial0
 no ip address
 encapsulation x25
 x25 address 4085551234
 x25 accept-reverse
 x25 default pad
!
router eigrp 10
 network 10.0.0.0
 passive-interface Dialer0
 no auto-summary
!
ip local pool dialin_pool 10.1.2.1 10.1.2.50
ip default-gateway 10.1.1.1
!
ip classless
!
translate x25 4085555123401 ppp ip-pool scope-name dialin_pool
!
!
dialer-list 1 protocol ip permit
!
line con 0
 login authentication console
line aux 0
 login authentication console
line vty 0 150
 login authentication vty
 transport input telnet rlogin
!
end
```

Virtual Private Dial Networks

A growing number of telcos and ISPs are providing virtual private dial networks (VPDNs) to enterprise customers, which are dial-in only solutions:

- Benefits
- Topology Options
- How VPDN Works
- Small Scale Running Configurations (Local AAA Security)
- Large Scale Running Configuration (Remote AAA RADIUS)

Benefits

VPDNs are dial-in access services provided by telcos and ISPs to enterprise customers who choose not to purchase, configure, or maintain access servers or modem pools. Using this scenario, the enterprise customer avoids costly front-end access resources (such as hundreds of modems, access servers, and additional telephone lines) as well as support and maintenance costs. The VPDN scenario is also a solution for service providers that have excess modem capacity and want to develop and offer a value-added dial-in service to their organization. Enterprises can save on capital investment by researching whether or not their ISP provides this kind of dial service.

Topology Options

There are two basic scenarios used to define or set up a VPDN solution. For service providers that provide access for five or fewer enterprises or domains, Cisco Systems recommends a small-sized VPDN with a local security solution. For ISPs that provide access for six or more enterprises or domains, Cisco Systems recommends a large-sized VPDN with a remote access control security solution. Cisco also recommends a large-scale VPDN for service providers that have a large pool of network access servers to maintain. The appropriate solution depends primarily on serviceability and scalability issues.

The difference between a small and large VPDN is the number of high-density access servers installed at the POP in addition to local versus remote security. Small-scale VPDNs require system administrators to maintain the security database on each dial-in access server. For large scale VPDNs, the authentication process is easily managed by a single access control security server using a UNIX-based application such as CiscoSecure. Each time a customer is added to a large-scale solution, a new domain name map entry does not need to be added locally to each access server's configuration file. Instead, the entry is recorded once in the security server's database. Remote security server solutions also take on the responsibility of defining L2F tunnel definitions and user names.

How VPDN Works

Figure 335 shows a sample VPDN network topology. An ISP has a stack of Cisco AS5200s connected to its 10.0.0.0 network, which provides a pool of integrated modems (for analog calls) and ISDN bearer channels (for circuit switched digital calls) for three enterprise customers (cisco.com, 0com.com, and decend.com).

The ISP provides each enterprise with its own home gateway router, firewall setup configured for authentication, and a common dial-in telephone number for each company's group of telecommuters or remote office users. Although the ISP provides the dial-in vehicle for the remote nodes, each enterprise customer assigns its own IP addresses and processes all the PPP packets sent by the remote

PCs. All network resource security is owned and maintained by the enterprise customer. From the enterprise's point of view, the connections initiated by the remote clients are virtually private and maintained by the enterprise.

Figure 335 VPDN Network Topology

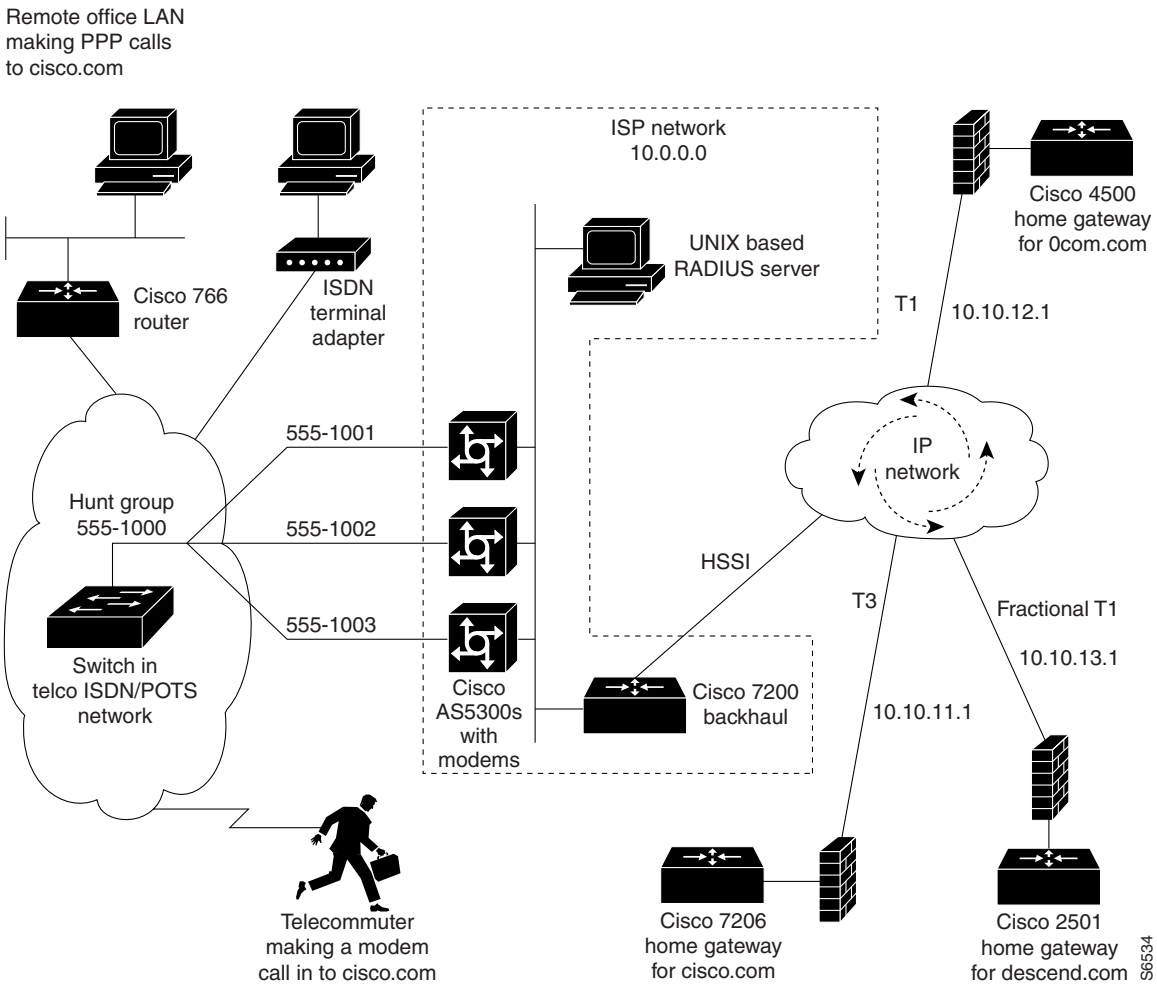

All enterprise home gateways only allow incoming L2F UDP packets on the WAN connection to their service provider. This configuration effectively firewalls off all IP connectivity other than that which is needed for the forwarding of user traffic. These enterprise network connections are virtually private and owned by the enterprise.

On the ISP's side of the configuration, each T1 line is assigned its own dial-in telephone number. The telco groups all T1 lines that connect to each Cisco AS5200 into a single hunt group. Because T1 lines are limited to 24 channels, the telco creates a hunt group telephone number so that the dial-in access is not limited to only 24 simultaneous users. A hunt group telephone number (shown in Figure 335 as 555-1000) provides the dial-in access for the dial-in clients. The hunt group number is the only number that clients dial in to, regardless if they are using modems, terminal adapters, or routers. As soon as a call comes into the telco's network, the telco's switch searches or hunts for the first available channel on each of the Cisco AS5200's T1 lines. One hunt group telephone number on the telco side provides multiple dial-in services for the ISP.

Depending on the size of the VPDN solution needed, local or remote security is configured on the ISP's access network. For small size VPDN solutions, the security database is configured and replicated locally on each Cisco AS5200. For larger size VPDN solutions, the security database is configured on an access control server (for example, a TACACS+ or RADIUS server running CiscoSecure). Each Cisco AS5200 that receives a call queries the local or remote security database for information about where to tunnel or send the call (for example, user name, domain mapping, home gateway address, and user profile).

Next is an example of how the VPDN dial-in process works for a telecommuter dialing in to the Cisco System's network. The telecommuter dials in to the ISP's modem pool using the hunt group dial-in number provisioned for Cisco Systems. Based on the dial-in client's login information, a Cisco AS5200 creates an L2F tunnel and relays the client's PPP frames over an IP network to the cisco.com gateway router for authentication. After a tunnel is built to the cisco.com gateway router, a backhaul router (shown in Figure 335 as the Cisco 7200) forwards encapsulated PPP frames on top of UDP packets through an IP substrate—a networking base that packets travel through.

Note Instead of basing the routing on the domain and user name, an ISP can build an L2F tunnel based on the phone number that the remote clients dial. However, this dialed number identification service (DNIS) information is collected only if you are using ISDN PRI lines, or if you have CT1 lines, and you must use MICA modem technology.

Small Scale Running Configurations (Local AAA Security)

The following sample configurations run on the routers and access servers featured in Figure 335. The configurations include only basic IP and local security support.

- Cisco AS5200 POP Example
- Cisco 2501 Home Gateway Example
- Cisco 4500 Series Home Gateway Example
- Cisco 7206 Series Home Gateway Example

Note Be sure to include your own IP addresses, host names, and security passwords where appropriate.

Cisco AS5200 POP Example

The following configuration is deployed on each of the Cisco AS5200s included in the service provider's stack group. See Figure 335. The only parts of the configuration that are configured differently on each access server are the Ethernet IP addresses and the IP addresses for the local pools.

```
!
version 11.2
service timestamps debug datetime msec
service timestamps log datetime msec
service password-encryption
no service udp-small-servers
no service tcp-small-servers
!
hostname NAS
!
aaa new-model
```

```
aaa authentication login default local
aaa authentication login console enable
aaa authentication login vty local
aaa authentication login dialin local
aaa authentication ppp default local
aaa authentication ppp dialin if-needed local
enable secret cisco
!
username admin password cisco
username ISP password ISP
username cisco.com password CISCO_SECRET
username 0com.com password 0COM_SECRET
username descend.com password DESCEND_SECRET
!
username admin password cisco
username MYSTACK password STACK-SECRET
sgbp group MYSTACK
sgbp member AS5200-2 10.1.1.12
sgbp member AS5200-3 10.1.1.13
sgbp member 7200 10.1.1.14
vpdn enable
vpdn outgoing cisco.com ISP ip 10.10.11.1
vpdn outgoing 0com.com ISP ip 10.10.12.1
vpdn outgoing descend.com ISP ip 10.10.13.1
async-bootp dns-server 10.1.3.1 10.1.3.2
isdn switch-type primary-5ess
!
controller T1 0
 framing esf
 clock source line primary
 linecode b8zs
 pri-group timeslots 1-24
!
controller T1 1
 framing esf
 clock source line secondary
 linecode b8zs
 pri-group timeslots 1-24
!
interface Loopback0
 ip address 10.1.2.254 255.255.255.0
!
interface Ethernet0
 ip address 10.1.1.10 255.255.255.0
 ip summary address eigrp 10 10.1.2.0 255.255.255.0
!
interface Serial0
 no ip address
 shutdown
!
interface Serial1
 no ip address
 shutdown
!
interface Serial0:23
 no ip address
 encapsulation ppp
 isdn incoming-voice modem
 dialer rotary-group 0
 dialer-group 1
 no fair-queue
 no cdp enable
!
interface Serial1:23
 no ip address
```

```
 encapsulation ppp
 isdn incoming-voice modem
 dialer rotary-group 0
 dialer-group 1
 no fair-queue
 no cdp enable
!
interface Group-Async1
 ip unnumbered Loopback0
 encapsulation ppp
 async mode interactive
 peer default ip address pool dialin_pool
 no cdp enable
 ppp authentication chap pap dialin
 group-range 1 48
!
interface Dialer0
 ip unnumbered Loopback0
 no ip mroute-cache
 encapsulation ppp
 peer default ip address pool dialin_pool
 dialer in-band
 dialer-group 1
 no fair-queue
 no cdp enable
 ppp authentication chap pap dialin
 ppp multilink
!
router eigrp 10
 network 10.0.0.0
 passive-interface Dialer0
 no auto-summary
!
ip local pool dialin_pool 10.1.2.1 10.1.2.50
ip default-gateway 10.1.1.1
ip classless
!
!
!
dialer-list 1 protocol ip permit
!
line con 0
 login authentication console
line 1 48
 autoselect ppp
 autoselect during-login
 login authentication dialin
 modem DialIn
line aux 0
 login authentication console
line vty 0 4
 login authentication vty
 transport input telnet rlogin
!
end
```

Cisco 2501 Home Gateway Example

The following configuration runs on the Cisco 2501 for descend.com, which is used by descend.com in Figure 335.

```
!
version 11.2
no service udp-small-servers
```

```
no service tcp-small-servers
!
hostname DESCEND_HGW
!
aaa new-model
aaa authentication login default local
aaa authentication ppp default local
!
username descend.com password DESCEND_SECRET
username ISP password ISP
username pcuser@descend.com password cisco
vpdn enable
vpdn incoming ISP descend.com virtual-template 1
!
interface Ethernet0
 ip address 3.1.1.1 255.255.255.0
!
interface Serial0
 ip address 10.10.13.1 255.255.255.252
 ip access-group 101 in
 encapsulation ppp
!
interface Serial1
 no ip address
 shutdown
!
interface Virtual-Template1
 ip unnumbered Ethernet0
 peer default ip address pool descend-pool
 ppp authentication chap pap
!
router eigrp 3
 network 3.0.0.0
 no auto-summary
!
ip local pool descend-pool 3.1.1.3 3.1.1.22
ip classless
!
!
line con 0
line aux 0
line vty 0 4
!
end
```

You can also use the following access lists to firewall off this home gateway from the VPDN provider. However, these access lists cut off all IP traffic on the router except for L2F information.

- **access-list 101 permit udp any host** *ip-address-of-serial-interface* **eq 1701**
- **access-list 101 deny ip any any**

Cisco 4500 Series Home Gateway Example

The following configuration runs on the Cisco 4500 for 0com.com, which is used by 0com.com in Figure 335.

```
!
version 11.2
no service udp-small-servers
no service tcp-small-servers
!
hostname 0COM_HGW
!
```

```
aaa new-model
aaa authentication login default local
aaa authentication ppp default local
!
username 0com.com password 0COM_SECRET
username ISP password ISP
username pcuser@0com.com password cisco
vpdn enable
vpdn incoming ISP 0com.com virtual-template 1
!
interface Ethernet0
 ip address 2.1.1.1 255.255.255.0
!
interface Ethernet1
 no ip address
 shutdown
!
interface Serial0
 ip address 10.10.12.1 255.255.255.252
 ip access-group 101 in
 encapsulation ppp
!
interface Serial1
 no ip address
 shutdown
!
interface Serial2
 no ip address
 shutdown
!
interface Serial3
 no ip address
 shutdown
!
interface Virtual-Template1
 ip unnumbered Ethernet0
 peer default ip address pool 0com-pool
 ppp authentication chap pap
!
router eigrp 2
 network 2.0.0.0
 no auto-summary
!
ip local pool 0com-pool 2.1.1.3 2.1.1.52
ip classless
!
!
line con 0
line aux 0
line vty 0 4
```

You can also use the following access lists to firewall off this home gateway from the VPDN provider. However, these access lists cut off all IP traffic on the router except for L2F information.

- **access-list 101 permit udp any host** *ip-address-of-serial-interface* **eq 1701**
- **access-list 101 deny ip any any**

Cisco 7206 Series Home Gateway Example

The following configuration runs on the Cisco 7206 for cisco.com, which is used by cisco.com in Figure 335.

```
version 11.2
no service udp-small-servers
no service tcp-small-servers
!
hostname CISCO_HGW
!
aaa new-model
aaa authentication login default local
aaa authentication ppp default local
!
username cisco.com password CISCO_SECRET
username ISP password ISP
username pcuser@cisco.com password cisco
vpdn enable
vpdn incoming ISP cisco.com virtual-template 1
!
interface Ethernet2/0
 ip address 1.1.1.1 255.255.255.0
!
interface Ethernet2/1
 no ip address
 shutdown
!
interface Ethernet2/2
 no ip address
 shutdown
!
interface Ethernet2/3
 no ip address
 shutdown
!
interface Serial3/0
 ip address 10.10.11.1 255.255.255.252
 ip access-group 101 in
 encapsulation ppp
!
interface Serial3/1
 no ip address
 shutdown
!
interface Serial3/2
 no ip address
 shutdown
!
interface Serial3/3
 no ip address
 shutdown
!
interface Virtual-Template1
 ip unnumbered Ethernet2/1
 peer default ip address pool cisco-pool
 ppp authentication chap pap
!
router eigrp 1
 network 1.0.0.0
 no auto-summary
!
ip local pool cisco-pool 1.1.1.3 1.1.1.102
ip classless
!
```

```
line con 0
line aux 0
line vty 0 4
!
end
```

You can also use the following access lists to firewall off this home gateway from the VPDN provider. However, these access lists cut off all IP traffic on the router except for L2F information.

- **access-list 101 permit udp any host** *ip-address-of-serial-interface* **eq 1701**
- **access-list 101 deny ip any any**

Large Scale Running Configuration (Remote AAA RADIUS)

Large scale VPDNs can provide dial-in access for dozens of different home gateways owned and maintained by different customers. For these large scale scenarios, it is not practical to configure the tunneling information for each home gateway on each network access server. Instead, the call tunneling information is set up on an access control server, such as a UNIX-based RADIUS server, which is owned and maintained by the service provider. However, all network resource security is still maintained by the enterprise customers at their home gateways.

This section includes a Cisco AS5200 configuration using RADIUS security, which is deployed on each stack group member in the large scale VPDN solution. This section also includes a user's file for a UNIX-based RADIUS server, which keeps track of all the incoming call tunneling information for multiple home gateways.

To compliment a remote RADIUS security solution, run the following configuration on each Cisco AS5200 in the VPDN stack group. See Figure 335.

Note Be sure to include your own IP addresses, host names, and security passwords where appropriate.

```
!
version 11.2
service timestamps debug datetime msec
service timestamps log datetime msec
service password-encryption
no service udp-small-servers
no service tcp-small-servers
!
hostname ISP
!
aaa new-model
aaa authentication login default local
aaa authentication login console enable
aaa authentication login vty local
aaa authentication login dialin radius
aaa authentication ppp default local
aaa authentication ppp dialin if-needed radius
aaa authorization network radius
aaa accounting exec start-stop radius
aaa accounting network start-stop radius
enable secret cisco
!
username admin password cisco
username MYSTACK password STACK-SECRET
sgbp group MYSTACK
sgbp member AS5200-2 10.1.1.12
```

```
sgbp member AS5200-3 10.1.1.13
sgbp member 7200 10.1.1.14
vpdn enable
async-bootp dns-server 10.1.3.1 10.1.3.2
isdn switch-type primary-5ess
!
controller T1 0
 framing esf
 clock source line primary
 linecode b8zs
 pri-group timeslots 1-24
!
controller T1 1
 framing esf
 clock source line secondary
 linecode b8zs
 pri-group timeslots 1-24
!
interface Loopback0
 ip address 10.1.2.254 255.255.255.0
!
interface Ethernet0
 ip address 10.1.1.10 255.255.255.0
 ip summary address eigrp 10 10.1.2.0 255.255.255.0
!
interface Serial0
 no ip address
 shutdown
!
interface Serial1
 no ip address
 shutdown
!
interface Serial0:23
 no ip address
 encapsulation ppp
 isdn incoming-voice modem
 dialer rotary-group 0
 dialer-group 1
 no fair-queue
 no cdp enable
!
interface Serial1:23
 no ip address
 encapsulation ppp
 isdn incoming-voice modem
 dialer rotary-group 0
 dialer-group 1
 no fair-queue
 no cdp enable
!
interface Group-Async1
 ip unnumbered Loopback0
 encapsulation ppp
 async mode interactive
 peer default ip address pool dialin_pool
 no cdp enable
 ppp authentication chap pap dialin
 group-range 1 48
!
interface Dialer0
 ip unnumbered Loopback0
 no ip mroute-cache
 encapsulation ppp
 peer default ip address pool dialin_pool
```

```
 dialer in-band
 dialer-group 1
 no fair-queue
 no cdp enable
 ppp authentication chap pap dialin
 ppp multilink
!
router eigrp 10
 network 10.0.0.0
 passive-interface Dialer0
 no auto-summary
!
ip local pool dialin_pool 10.1.2.1 10.1.2.50
ip default-gateway 10.1.1.1
ip classless
!
dialer-list 1 protocol ip permit
radius-server host 10.1.1.23 auth-port 1645 acct-port 1646
radius-server host 10.1.1.24 auth-port 1645 acct-port 1646
radius-server key cisco
!
line con 0
 login authentication console
line 1 48
 autoselect ppp
 autoselect during-login
 login authentication dialin
 modem DialIn
line aux 0
 login authentication console
line vty 0 4
 login authentication vty
 transport input telnet rlogin
!
end
```

The following user's file runs on the UNIX-based RADIUS server shown in Figure 335. This user's file provides the L2F tunnel definitions and user names for ten different home gateway routers at ten different company sites. This configuration uses the cisco-avpair attribute, which is a vendor-specific attribute (attribute 26). The RADIUS server must support the vendor-specific option, as defined in RFC 2138. Otherwise, the configuration will not work.

```
corp1.com Password = "cisco", Service-Type = Outbound-User
        cisco-avpair = "vpdn:tunnel-id=NAS",
        cisco-avpair = "vpdn:nas-password=corp1secret",
        cisco-avpair = "vpdn:gw-password=corp1secret",
        cisco-avpair = "vpdn:ip-addresses=10.10.1.1"

corp2.com Password = "cisco", Service-Type = Outbound-User
        cisco-avpair = "vpdn:tunnel-id=NAS",
        cisco-avpair = "vpdn:nas-password=corp2secret",
        cisco-avpair = "vpdn:gw-password=corp2secret",
        cisco-avpair = "vpdn:ip-addresses=10.10.2.1"

corp3.com Password = "cisco", Service-Type = Outbound-User
        cisco-avpair = "vpdn:tunnel-id=NAS",
        cisco-avpair = "vpdn:nas-password=corp3secret",
        cisco-avpair = "vpdn:gw-password=corp3secret",
        cisco-avpair = "vpdn:ip-addresses=10.10.3.1"

corp4.com Password = "cisco", Service-Type = Outbound-User
        cisco-avpair = "vpdn:tunnel-id=NAS",
        cisco-avpair = "vpdn:nas-password=corp4secret",
        cisco-avpair = "vpdn:gw-password=corp4secret",
```

```
        cisco-avpair = "vpdn:ip-addresses=10.10.4.1"

corp5.com Password = "cisco", Service-Type = Outbound-User
        cisco-avpair = "vpdn:tunnel-id=NAS",
        cisco-avpair = "vpdn:nas-password=corp5secret",
        cisco-avpair = "vpdn:gw-password=corp5secret",
        cisco-avpair = "vpdn:ip-addresses=10.10.5.1"

corp6.com Password = "cisco", Service-Type = Outbound-User
        cisco-avpair = "vpdn:tunnel-id=NAS",
        cisco-avpair = "vpdn:nas-password=corp6secret",
        cisco-avpair = "vpdn:gw-password=corp6secret",
        cisco-avpair = "vpdn:ip-addresses=10.10.6.1"

corp7.com Password = "cisco", Service-Type = Outbound-User
        cisco-avpair = "vpdn:tunnel-id=NAS",
        cisco-avpair = "vpdn:nas-password=corp7secret",
        cisco-avpair = "vpdn:gw-password=corp7secret",
        cisco-avpair = "vpdn:ip-addresses=10.10.7.1"

corp8.com Password = "cisco", Service-Type = Outbound-User
        cisco-avpair = "vpdn:tunnel-id=NAS",
        cisco-avpair = "vpdn:nas-password=corp8secret",
        cisco-avpair = "vpdn:gw-password=corp8secret",
        cisco-avpair = "vpdn:ip-addresses=10.10.8.1"

corp9.com Password = "cisco", Service-Type = Outbound-User
        cisco-avpair = "vpdn:tunnel-id=NAS",
        cisco-avpair = "vpdn:nas-password=corp9secret",
        cisco-avpair = "vpdn:gw-password=corp9secret",
        cisco-avpair = "vpdn:ip-addresses=10.10.9.1"

corp10.com Password = "cisco", Service-Type = Outbound-User
        cisco-avpair = "vpdn:tunnel-id=NAS",
        cisco-avpair = "vpdn:nas-password=corp10secret",
        cisco-avpair = "vpdn:gw-password=corp10secret",
        cisco-avpair = "vpdn:ip-addresses=10.10.10.1"
```

The following configuration runs on a Cisco 4500 series home gateway router that is used in a large-scale VPDN solution:

```
!
version 11.2
no service udp-small-servers
no service tcp-small-servers
!
hostname CORP1_HomeGateway
!
aaa new-model
aaa authentication login default local
aaa authentication ppp default local
!
username NAS password corp1secret
username NAS password corp1secret
username pcuser@corp1.com password cisco
vpdn enable
vpdn incoming ISP corp1.com virtual-template 1
!
interface Ethernet0
 ip address 4.1.1.1 255.255.255.0
!
interface Ethernet1
 no ip address
 shutdown
!
```

```
interface Serial0
 ip address 10.10.1.1 255.255.255.252
 encapsulation ppp
!
interface Serial1
 no ip address
 shutdown
!
interface Serial2
 no ip address
 shutdown
!
interface Serial3
 no ip address
 shutdown
!
interface Virtual-Template1
 ip unnumbered Ethernet0
 peer default ip address pool corp1_pool
 ppp authentication chap pap
!
router eigrp 2
 network 2.0.0.0
 no auto-summary
!
ip local pool corp1_pool 4.1.1.3 4.1.1.52
ip classless
!
!
line con 0
line aux 0
line vty 0 4
```