Supporting and Using Additional CLI Access Options

The Command Line Interface (CLI) management tool allows you to configure the MGX 8850 and display the switch status. When a switch starts up for the first time, the only CLI access available is through the Console Port (CP). After the switch is properly configured, you can access the CLI using any of the following:

- CP port connection
- Terminal server connection
- Local LAN connection
- Dial-up connection
- ATM WAN connection

The following sections describe how to prepare the switch for the different types of CLI access and how to access the switch using these access methods.

Setting Up CP Port Connections

The Console Port (CP) connection requires no configuration on the switch. Figure C-1 shows the hardware required for a console port connection.

Figure C-1 Workstation Connection to the Console Port

The terminal you use should emulate a VT-100 terminal. You can use any personal computer or UNIX workstation and a terminal emulation program that emulates the VT-100.

The default switch configuration supports the following settings: 9600 bps, 8 data bits, no parity, 1 stop bit, no hardware flow control.

Setting Up Terminal Server Connections

A terminal server connection allows remote access to the CP port. Figure C-2 shows the hardware required for a terminal server connection.

Figure C-2 Terminal Server Connection to the Console Port

In the terminal server topology, any workstation with access to the terminal server can access the CP port as if the workstation were local. When the switch is operating properly, a terminal server connection offers no advantage over the other access methods. When the switch is not operating properly, however, other access methods might not function. In these situations, the CP port is more likely to operate than the other methods because it does not require IP connectivity to the workstation.

No special switch configuration is required to support a terminal switch configuration. The connection between the terminal server and the switch is a serial connection, which is the same as for a CP port connection. The following configuration tasks need to be completed at the terminal server:

- The serial port to the switch must be enabled and configured.
- A second interface must be defined and configured for workstation access.

The workstation interface can be any interface type that both the workstation and the terminal server support. For example, the workstation interface could be an Ethernet interface for local LAN access, or it could be a dial-in interface for remote access.

To access the switch through the terminal server, the workstation establishes a connection to the terminal server using a terminal emulation program. After connecting to the terminal server, the workstation user enters a command that selects the serial port to the switch. Once the correct port is selected, the user logs in to the switch as if the user were using a CP port connection.

Setting Up Local LAN Connections

A local LAN connection extends switch management to all workstations that have connectivity to the LAN to which the switch is connected. Figure C-1 shows the hardware required for a local LAN connection.

Figure C-3 Hardware Required for Local LAN Connections

Before you can manage the switch through the PXM45 LAN port, you must first assign an IP address to the LAN port. This Ethernet LAN port is located on the PXM45 back card. For additional instructions on physically connecting a terminal or workstation to this port, refer to the *Cisco MGX 8850 Hardware Installation Guide, Release 2.0*.

To configure an IP address for the PXM45 LAN port, use the following procedure.

Step 1 Establish a CLI management session using a username with SUPER_GP privileges. The default user name and password for this level are *superuser*, *superuser*.

Step 2 Verify that the IP address is not already configured by entering the **dspipif** command:

```
mgx8850a.7.PXM.a> dspipif lnPci0
```

Note If you omit the **lnPci0** option, the switch displays the configuration for all switch IP interfaces: the ATM interface (atm0), the PXM45 LAN port interface (lnPci0), and the PXM45 maintenance port interface (sl0).

In the IP Interface Configuration Table, look for an Internet address entry under the lnPci entry. If an IP address is configured, you can use that address and skip the rest of this procedure. However, if the address has not been entered or is incompatible with your network, you must configure a valid IP address as described in the next step.

Step 3 To set the IP address for the LAN port, enter the **ipifconfig** command using the following format:

```
mgx8850a.7.PXM.a> ipifconfig lnPci0 <IP_Addr> <netmask Mask>
```

Replace *IP_Addr* with the IP address you want this port to use, and replace *Mask* with the network mask used on this network.

Tips Cisco recommends that you use the same subnet for all IP addresses defined on all MGX 8850 switches. This simplifies router configuration.

Note There are other options for the **ipifconfig** command, and you can set one or more options simultaneously. Any options you do not define in a command remain unchanged. For more information on this command, refer to *Cisco MGX 8850 Routing Switch Command Reference, Release 2.0*.

After you complete this procedure, the switch is ready for management through the PXM45 Ethernet port.

Setting Up Dial-up Connections

A dial-up connection extends switch management to all workstations that have access to the Public Switched Telephone Network. Figure C-4 shows the hardware required for a dial-up connection.

Figure C-4 Hardware Required for Dial-up Connections

Before you can manage the switch using the dial-up interface, you must first assign an IP address to the maintenance port on the switch. This maintenance port is located on the PXM45 back card. For more information on physically connecting a modem to the maintenance port, refer to the *Cisco MGX 8850 Hardware Installation, Release 2* guide.

To configure an IP address on the switch maintenance port, use the following procedure.

Step 1 Establish a CLI management session using a username with SUPER_GP privileges. The default user name and password for this level are *superuser*, *superuser*.

Step 2 Verify that the IP address is not already configured by entering the following command:

```
mgx8850a.7.PXM.a> dspipif sl0
```

Note If you omit the **sl0** option, the switch displays the configuration for all switch IP interfaces: the ATM interface (atm0), the PXM45 LAN port interface (lnPci0), and the PXM45 maintenance port interface (sl0).

In the IP Interface Configuration Table, look for an Internet address entry under the sl0 entry. (You may need to press **Enter** to see this.) If an IP address is configured, you can use that address and skip the rest of this procedure. However, if the address has not been entered or is incompatible with your network, you must configure a valid IP address as described in the next step.

Step 3 To set the IP address for the maintenance port, enter the **ipifconfig** command using the following format:

```
mgx8850a.7.PXM.a> ipifconfig sl0 <IP_Addr> <netmask Mask>
```

Replace *IP_Addr* with the IP address you want this port to use, and replace *Mask* with the network mask used on this network.

Tips Cisco recommends that you use the same subnet for all IP addresses defined on all MGX 8850 switches. This simplifies router configuration.

Note There are other options for the ipifconfig command, and you can set one or more options simultaneously. Any options you don't define in a command remain unchanged. For more information on this command, refer to *Cisco MGX 8850 Routing Switch Command Reference, Release 2.0*.

After you complete this procedure, the switch is ready for configuration through the maintenance port.

Setting Up ATM WAN Connections

An ATM connection extends switch management to all workstations that have access to the ATM network in which the switch is installed. Figure C-5 shows the hardware required for an ATM WAN connection.

Figure C-5 Hardware Required for an ATM WAN Connection

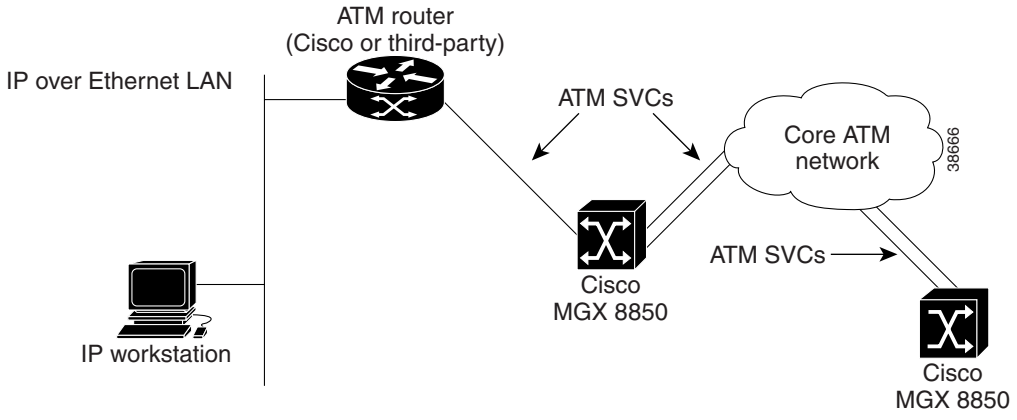

The workstation in Figure C-5 uses a LAN to connect to a router that supports both LAN and ATM interfaces. An IP address is assigned to an ATM interface in each Cisco MGX 8850. To manage an MGX 8850, the workstation operator configures a network management program to communicate with the IP address assigned to the ATM interface. Network managers can use the following tools to manage the switch:

- Command Line Interface (CLI) using a Telnet session
- Cisco WAN Manager (CWM)
- Third-party Simple Network Management Protocol (SNMP) manager

To support the ATM SVCs over which the IP traffic travels, both the router and switch are configured to map the respective IP addresses to ATM End Station Addresses (AESAs). When a management session is initiated, the IP workstation directs all communications to the IP address assigned to the ATM interface on the switch. The router encapsulates this IP traffic in ATM cells and forwards it over SVCs to the switch. The destination switch retrieves the IP messages from the ATM cells and forwards them to the internal IP management tools. Replies to the workstation follow the same path in reverse.

This feature provides maximum flexibility for switch management. Any workstation with a connection to a properly-configured ATM router can manage any switch in the network. Furthermore, additional routers connected to other switches can be configured to support this feature, enabling switch configuration from multiple locations throughout an ATM network.

Configuring the Switch

To support IP connectivity over the ATM interface, you need to do the following:

- Assign an IP address to the ATM interface.
- Assign an AESA to the ATM interface.
- Define an AESA for every adjacent router that supports IP communications to the ATM interface.
- Configure ATM communications between the switch and the router.

To configure the switch to support IP connectivity to the ATM interface, use the following procedure.

Step 1 Establish a CLI management session using a username with SUPER_GP privileges. The default user name and password for this level are *superuser*, *superuser*.

Step 2 Verify that the IP address for the ATM interface is not already configured by entering the following command:

```
mgx8850a.7.PXM.a> dspipif atm0
```

Note If you omit the **atm0** option, the switch displays the configuration for all switch IP interfaces: the ATM interface (atm0), the PXM45 LAN port interface (lnPci0), and the PXM45 maintenance port interface (sl0).

In the IP Interface Configuration Table, look for an Internet address entry under the atm entry. If an IP address is configured, you can use that address. However, if the address has not been entered or is incompatible with your network, you must configure a valid IP address as described in the next step.

Step 3 To set the switch IP address for the ATM interface, enter the **ipifconfig** command using the following format:

```
mgx8850a.7.PXM.a> ipifconfig atm0 <IP_Addr> <netmask Mask>
```

Replace *IP_Addr* with the IP address you want this port to use, and replace *Mask* with the network mask used on this network.

Tips Cisco recommends that you use the same subnet for all IP addresses defined on all MGX 8850 switches. This simplifies router configuration.

Note There are other options for the **ipifconfig** command, and you can set one or more options simultaneously. Any options you do not define in a command remain unchanged. For more information on this command, refer to *Cisco MGX 8850 Command Reference, Release 2.0*.

Step 4 To verify the IP address you configured, enter the following command:

```
mgx8850a.7.PXM.a> dspipif atm0
```

Step 5 Make a note of the IP address defined for the atm0 interface. This is the IP address switch administrators must use to manage the switch.

Step 6 Configure the switch AESA for IP connectivity by entering the following command:

```
mgx8850a.7.PXM.a> svcifconfig atm0 local <ATM_Addr>
```

Replace *ATM_Addr* with the AESA for the interface. This address must conform to the address plan for the switch.

Step 7 Define the AESA for the ATM router by entering the following command:

```
mgx8850a.7.PXM.a> svcifconfig atm0 router <ATM_Addr>
```

Replace *ATM_Addr* with the AESA for the interface. This address must conform to the address plan for the switch.

Step 8 To verify the ATM addresses you configured, enter the following command:

```
mgx8850a.7.PXM.a> dspsvcif
```

Step 9 If you have not already done so, configure the PNNI controller as described in "Configuring the PNNI Controller," in Chapter 2, "Configuring General Switch Features."

Step 10 Configure the ATM line to the ATM router as described in "Line Configuration Quickstart" in Chapter 4, "Provisioning AXSM Communication Links."

The line configuration should specify a UNI port, SCT 6, and a partition that supports at least 20 connections.

Step 11 To verify connectivity to directly attached ATM routers, enter the **dsppnsysaddr** command.

The ATM addresses of directly attached ATM routers should appear in the list the switch displays. To display an ATM address for a remote router, you need to establish a CLI session on the remote switch and enter the **dsppnsysaddr** command.

Step 12 To check the status of ports leading to directly-attached ATM routers, enter the **dsppnports** command.

The following example shows commands that you can use to configure an MGX 8850 for IP communications over ATM.

Example C-1 Switch Commands for IP Communications over ATM

```
mgx8850a.7.PXM.a> ipifconfig atm0 A.B.E.F    # Replace A.B.E.F with IP Address
mgmgx8850a.7.PXM.a> svcifconfig atm0 local
47.0091.8100.0000.0010.7b65.f258.0010.7b65.1111.01
mgx8850a.7.PXM.a> svcifconfig atm0 router
47.0091.8100.0000.0010.7b65.f258.0010.7b65.ffff.f1
mgx8850a.7.PXM.a> addcontroller 2 i 2 7 #if controller does not already exist
mgx8850a.10.AXSM.a > cnfcdsct 6
mgx8850a.10.AXSM.a > upln 1.1
mgx8850a.10.AXSM.a > addport 1 1.1 96000 96000 6 1
mgx8850a.10.AXSM.a > addpart 1 1 2 500000 500000 500000 500000 1 20 32 52 1 20
mgx8850a.10.AXSM.a > upport 1
mgx8850a.10.AXSM.a > cnfilmi -if 1 -id 1 -ilmi 1 -vpi 0 -vci 16 -trap 1 -s 10 -t 10 -k 10
#Optional. This command configures ILMI for the port.
mgx8850a.7.PXM.a> addaddr 10:1.1:1 47.0091.8100.0000.0010.7b65.f258.0010.7b65. ffff.f1 160
#Enter only at switch with direct connection to router. Omit if using ILMI.
mgx8850a.7.PXM.a> dsppnsysaddr

(example output)
47.0091.8100.0000.0010.7b65.f258.0010.7b65.ffff/152
Type:      uni     Port id:   17111041

mgx8850a.7.PXM.a> dsppnports

(example output)
Per-port status summary

PortId         IF status         Admin status       ILMI state       Total Activeconns

10:1.1.1:1        up                up                 Undefined        3
```

Configuring the Router

To support IP over ATM communications on the ATM router, you need to configure the following interfaces:

- ATM interface to switch
- Interface to the LAN that hosts the management workstation

To configure the ATM interface to the switch, you need to do the following:

- Create an ATM interface.
- Assign an IP address to the ATM interface.
- Assign an AESA to the ATM interface.
- Configure the ATM interface to be the ATMARP server for the switch.

If the router's IP address for the ATM interface is on the same subnet as the IP address on the switch ATM interface, no additional configuration is required for the router's IP LAN interface.

To configure the IP interface to the LAN, you need to do the following:

- If the router's IP address for the ATM interface is not on the same subnet as the IP address on the switch ATM interface, you must manually configure on IP host-route for each MGX 8850 to which the interface will connect.
- Configure a routing protocol to broadcast the switch IP addresses to the LAN or create default routes to the switch on the management workstation.

The procedure you use to configure the ATM router will depend on the router you are using. The following example lists commands you can use on a Cisco router to support IP over ATM communications with the MGX 8850.

Example C-2 Router Configuration Commands for IP Communications over ATM

```
config term
ip routing
ip route 0.0.0.0 0.0.0.0 W.X.Y.Z 1 (set default route)
interface atm 0
ip address A.B.C.D G.H.I.J   # G.H.I.J = netmask
atm nsap-address 47.0091.8100.0000.0010.7b65.f258.0010.7b65.ffff.f1
atm uni-version 3.1
atm pvc 1 0 5 qsaal
atm pvc 2 0 16 ilmi #Optional. Enter to enable ILMI.
atm ilmi-keepalive 10 #Optional. Enter to configure ILMI.
atm esi-address 00107B65FFFF.F1 #Optional. Enter to support ILMI.
atm arp-server self
no shut
^Z

write memory
```

Starting a CLI Management Session Using a CP Port or Terminal Server Connection

The process for starting a CLI management session is similar for both CP port and terminal server connections. Both use a serial connection to the switch. The difference is that terminal server connections require that you first select the correct port at the terminal server.

After switch initialization, you can terminate and start sessions at any time using the terminal or workstation connection to the CP port or terminal server.

To start a CLI management session for CP port and terminal server connections, use the following procedure.

Step 1 Turn on the terminal or start the terminal session.

For instructions on preparing the terminal and the connection, refer to the procedure in the previous section.

Step 2 If you are accessing the switch through a terminal server, enter the commands that allow you to select the serial port that leads to the switch. The following example shows the commands that accomplish this on a Cisco 2509-RJ Router.

```
User Access Verification

Password:
router>telnet 10.1.1.1 2001
Trying 10.1.1.1, 2001 ... Open

Login:
```

In the example above, the user first logs into the terminal server and then establishes a Telnet session to the terminal server using port 2001. All workstation communications pass through the Telnet server on the terminal server and out the serial connection designated by port 2001.

Note The built-in Telnet server on the switch, which is used by the other access methods, is not used for this type of connection.

Step 3 If the Login prompt does not appear, press **Return**. The Login prompt comes from the switch and indicates that the terminal has successfully connected to the switch.

Step 4 When the Login prompt appears, enter the login name supplied with your switch, and then enter the password for that login name. For example:

```
Login: superuser
password:

pop20one.7.PXM.a >
```

The switch does not display the password during login. When login is complete, the switch prompt appears, you have established a CLI management session, and you are ready to begin switch configuration and monitoring.

Starting a CLI Telnet Session

Start a CLI Telnet session when you start a CLI management session using any of the following access methods, all of which require an IP address:

- Local LAN connection
- Dial-up connection
- ATM WAN connection

The switch includes a Telnet server process that you can use to connect to and manage the switch. Before you can establish a CLI Telnet session, you must set up the hardware for your access method and configure the switch as described earlier in the appendix.

After the appropriate interface has been configured and a physical path established to the MGX 8850, you can start a CLI session using a workstation with a Telnet client program and the switch's IP address. To establish a CLI management session, use the following procedure.

Step 1 If you dialing into the switch, establish a dial-up connection to the switch.

You will need the telephone number for the line connected to the modem at the switch. For instructions on establishing the connection to the switch, refer to the documentation for the workstation and modem.

Step 2 When the workstation has a path to the switch, start the Telnet program with a command similar to the following:

```
C:>telnet ipaddress
```

Replace *ipaddress* with the IP address assigned to the switch. If the switch is configured to support multiple access methods, be sure to use the correct IP address for the access method you are using. For example, if you are using the local LAN access method, use the IP address configured for the lnPCI0 interface.

Note Note that the Telnet program on your workstation may require a different start up and connection procedure. For instructions on operating your Telnet program, refer to the documentation for that product.

Step 3 If the Login prompt does not appear, press **Enter**.

The Login prompt comes from the switch and indicates that the workstation has successfully connected to the switch.

Step 4 When the Login prompt appears, enter the user name provided with your switch and press **Enter**.

Step 5 When the password prompt appears, enter the password provided with your switch and press **Enter**.

After you successfully log in, a prompt appears that is similar to the following:

```
mgx8850a.7.PXM.a >
```

The switch does not display the password during login. When the login is complete, the switch prompt appears, you have established a CLI management session, and you are ready to begin switch configuration and monitoring.

Ending a CLI Management Session

CLI management sessions automatically terminate after the configured idle time. The default idle time is 600 seconds (10 minutes) and can be changed with the **timeout** command. To end a CLI management session, enter the **bye** command.

Note This command ends the CLI session. It does not terminate the connection to the switch. For example, the **bye** command does not terminate a dial-up connection, a terminal server connection, a local LAN connection, or an ATM WAN connection. The connection remains in place until you terminate it using the terminal emulation software or Telnet client software. Some client software packages include commands to terminate the connection, and most all client software packages close connections when you quit the program.

If you have not terminated the connection after entering the **bye** command, you can restart a CLI management session by pressing **Return**. After you press **Return**, the switch will prompt you for a username and password.