APPENDIX **B**

Initial Configuration for the Switch

Revised: October 27, 2011

This chapter provides a quick step-by-step initial setup procedure for a switch.

These steps describe how to do a simple installation:

1. Connecting to the Switch, page B-2
2. Starting the Terminal-Emulation Software, page B-3
3. Connecting to a Power Source, page B-3
4. Entering the Initial Configuration Information, page B-4

Note If you are using a DC power supply, see the "Connecting DC Power to the Switch" section on page 3-10 for more information about setting up your switch with a DC power supply.

Note You need to provide the console cable and the Category 5 straight-through cables to connect the console port to a PC and switch ports to Ethernet devices.

Connecting to the Switch

You must use the console port to perform the initial configuration. To connect the switch console port to a PC, use an RJ-45-to-DB-9 adapter cable (optional; not supplied as part of the chassis accessory kit).

Follow these steps to connect the PC or terminal to the switch:

Step 1 Using an RJ-45-to-DB-9 adapter cable, insert the RJ-45 connector into the console port that is located on the front of the switch, as shown in Figure B-1.

Step 2 Attach the DB-9 female DTE of the adapter cable to a PC serial port, or attach an appropriate adapter to the terminal.

Figure B-1 Connecting a Switch to a PC

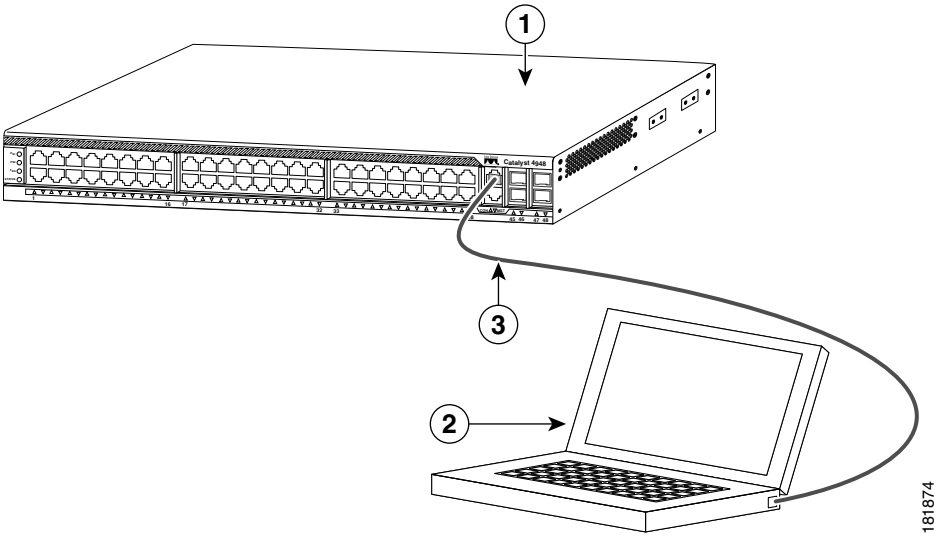

1	Switch chassis	**3**	RJ-45-to-DB-9 adapter cable
2	Laptop		

Starting the Terminal-Emulation Software

Before you power on the switch, start the terminal-emulation session so that you can see the output display from the power-on self-test (POST).

The terminal-emulation software—frequently a PC application such as Hyperterminal or ProcommPlus—makes communication between the switch and your PC or terminal possible.

Step 1 Start the terminal-emulation program if you are using a PC or terminal.

Step 2 Start a terminal-emulation session.

Step 3 Configure the baud rate and character format of the PC or terminal to match these console port default characteristics:

- 9600 baud
- 8 data bits
- 1 stop bit
- No parity
- None (flow control)

Connecting to a Power Source

Follow these steps to connect to a power source:

Step 1 If you are using an AC power supply, connect one end of the supplied AC power cord to the power connector on the switch rear panel, and then connect the other end of the power cable to a grounded AC outlet. (See Figure B-1.)

Step 2 If you are using a DC power supply, see the "Connecting DC Power to the Switch" section on page 3-10 for instructions on how to install the DC power supply.

As the switch powers on, it begins the POST, a series of tests that runs automatically to ensure that the switch functions properly.

POST lasts approximately 1 minute. After POST is complete, the system and status LEDs remain green (see the "Front Panel LEDs" section on page 1-9 for more information).

If the switch fails POST, the system LED turns amber.

Note POST failures are usually fatal. Call Cisco Systems if your switch does not pass POST.

If you started the terminal-emulation program before you powered on your switch, the PC or terminal displays the bootloader sequence. Press Enter to display the setup program prompt.

Entering the Initial Configuration Information

To set up the switch, you need to assign an IP address and other configuration information necessary for the switch to communicate with the local routers and the Internet. The minimal configuration provided here does not cover most of the features, it simply allows you to preform other configuration tasks using a telnet connection from your management network. To configure other features and interfaces, please refer to the *Catalyst 4500 Series Switch Software Configuration Guide.*

IP Settings

Obtain this information from your network administrator:

- Switch IP address
- Subnet mask (IP netmask)
- Default gateway (router)
- Enable secret password
- Enable password
- Telnet password

Performing the Initial Configuration

Follow these steps to complete the initial configuration for the switch:

Step 1 At the terminal prompt, enter the enable command to enter privileged exec mode:

```
Switch> enable
Password: password
Switch#
```

Step 2 Set the system time using the **clock set** command in privileged EXEC mode.

```
Switch# clock set 20:09:01 3 Apr 2006
```

Step 3 Verify the change by entering the **show clock** command.

```
Switch# show clock
20:09:06.079 UTC Thu Apr 3 2006
```

Step 4 Enter the **configure terminal** command to enter global configuration mode.

```
Switch# configure terminal
Enter configuration commands, one per line. End with CNTL/Z.
Switch (config)#
```

Step 5 Configure a host name for the switch, and press **Return**.

```
Switch (config)# hostname Switch1
```

Step 6 Configure the system prompt for the switch, and press **Return**. To remove the new prompt and return the prompt to its default, use the **no prompt** command.

```
Switch (config)# prompt Switch1>
```

Step 7 Use the **banner motd** global configuration command to set location information in the login banner. You can also set a system contact using this command.

```
Switch1(config)# banner motd c 170 West Tasman Drive, San Jose, CA c
```

or

```
Switch1 (config)# banner motd c 170 West Tasman Drive, San Jose, CA;
Tech Support 408 123 4567 c
```

Step 8 Configure an enable secret password, and press **Return**.

The password can be from 1 to 25 alphanumeric characters, can start with a number, is case sensitive, allows spaces, but ignores leading spaces. The secret password is encrypted and the enable password is in plain text.

```
Switch1 (config)# enable secret SecretPassword
```

Step 9 Configure an enable password, and press **Return**.

```
Switch1 (config)# enable password EnablePassword
```

Step 10 Configure a virtual terminal (Telnet) password, and press **Return**.

The password can be from 1 to 25 alphanumeric characters, is case sensitive, allows spaces, but ignores leading spaces.

```
Switch1 (config)# password terminal-password
Switch1 (config)# line vty 0 15
```

Step 11 Configure the interface that connects to the management network. (The IP address and subnet mask shown are for example only. Use an address appropriate for your network.)

```
Switch1 (config)# ip routing
Switch1 (config)# interface gigabitethernet 24
Switch1 (config-if)# no switchport
Switch1 (config-if)# no shutdown
Switch1 (config-if)# ip address 10.4.120.106 255.0.0.0
Switch1 (config-if)# exit
```

Step 12 Exit from global configuration mode:

```
Switch (config)# exit
Switch #
```

Step 13 View the configuration you just created and confirm that it is what you want.

```
Switch1# show run
!
hostname Switch1
!
banner motd ^C
170 West Tasman Drive, San Jose, CA ^C
!

!--- Output suppressed.
```

Step 14 Verify the IP information by using the **show ip interface brief** and **show ip route** commands.

```
Switch1# show ip interface brief
```

```
Interface        IP-Address         OK?    Method      Status
Protocol
Vlan1            172.16.1.2         YES    manual        up
up
FastEthernet1   unassigned         YES    unset         up
up

!--- Output suppressed.
Switch1# show ip route
Codes: C - connected, S - static, I - IGRP, R - RIP, M - mobile, B -
BGP
       D - EIGRP, EX - EIGRP external, O - OSPF, IA - OSPF inter area
       N1 - OSPF NSSA external type 1, N2 - OSPF NSSA external type 2
       E1 - OSPF external type 1, E2 - OSPF external type 2, E - EGP
       i - IS-IS, L1 - ISIS level-1, L2 - ISIS level-2, ia - ISIS
inter area
       * - candidate default, U - per-user static route, o - ODR
       P - periodic downloaded static route

Gateway of last resort is 172.16.1.1 to network 0.0.0.0

     172.16.0.0/24 is subnetted, 1 subnets
C       172.16.1.0 is directly connected, Vlan1
S*   0.0.0.0/0 [1/0] via 172.16.1.1
Switch1#
```

Step 15 Save the running configuration:

```
Switch1# copy system:running-config nvram:startup-config
```

You have now completed the initial configuration of the switch.

To use the CLI to perform additional configuration or management tasks, enter commands at the Switch> prompt through the console port by using a terminal program or through the network by using Telnet. For configuration information, refer to the switch software configuration guide or the switch command reference.