Power Supply Installation

Power Supply Module Overview

The switch operates with either one or two active power supply modules. A Catalyst 3850 switch that is part of a StackPower stack operates with power supplied by other stack switches.

You can use two AC modules, two DC modules, one AC and one DC module, or one module and a blank cover.

Note In a NEBS installation, you can use two DC modules or one DC module and a blank cover.

All power supply modules have internal fans. All switches ship with a blank cover in the second power supply slot.

The following table describes the supported internal power supply modules.

Table 1: Power Supply Module Part Numbers and Descriptions

Part Number	Description
PWR-C1-1100WAC=	1100-W AC power supply module
PWR-C1-715WAC=	715-W AC power supply module
PWR-C1-350WAC=	350-W AC power supply module
CPWR-C1-440WDC=	440-W DC power supply module
PWR-C3-750WAC-R	750-W AC power supply module
PWR-C3-750WAC-F	750-W AC power supply module

Part Number	Description
PWR-C3-750WDC-R	750-W DC power supply module
PWR-C3-750WDC-F	750-W DC power supply module
PWR-C1-BLANK	Blank cover

For information on available PoE, PoE+, and UPOE and PoE requirements, see these sections the Power Supply Modules.

The 350-W and 715-W AC power supply modules are autoranging units that support input voltages between 100 and 240 VAC. The 1100-W power supply module is an autoranging unit that supports input voltages between 115 and 240 VAC. The 440-W DC power supply module has dual input feeds (A and B) and supports input voltages between 36 and 72 VDC. The output voltage range is 51 to 57 V.

Each AC power supply module has a power cord for connection to an AC power outlet. The 1100-W and 715-W modules use a 16-AWG cord (only North America). All other modules use an 18-AWG cord. The DC power supply module must be wired to a DC power source.

The following illustrations show the power supply modules.

Figure 1: 1100-W AC Power Supply

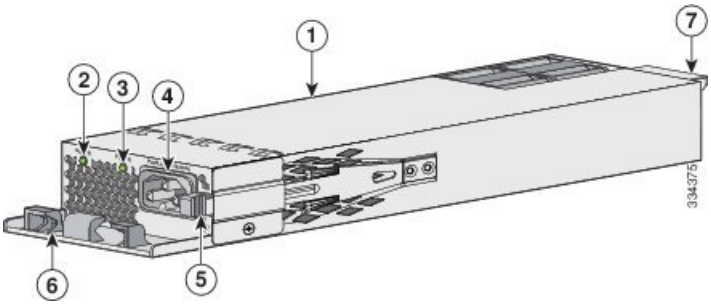

1	1100-W AC power supply module	5	Release latch
2	AC OK LED	6	Power cord retainer
3	PS OK LED	7	Keying feature
4	AC power cord connector		

Figure 2: 715-W AC Power Supply

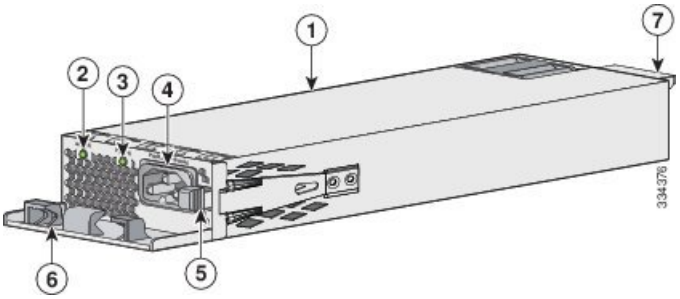

1	715-W AC power supply module	5	Release latch
2	AC OK LED	6	Power cord retainer
3	PS OK LED	7	Keying feature
4	AC power cord connector		

Figure 3: 350-W AC Power Supply

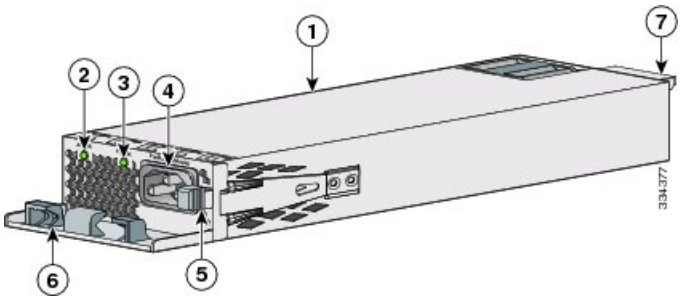

1	350-W AC power supply module	5	Release latch
2	AC OK LED	6	Power cord retainer
3	PS OK LED	7	Keying feature
4	AC power cord connector		

Figure 4: 440-W DC Power Supply

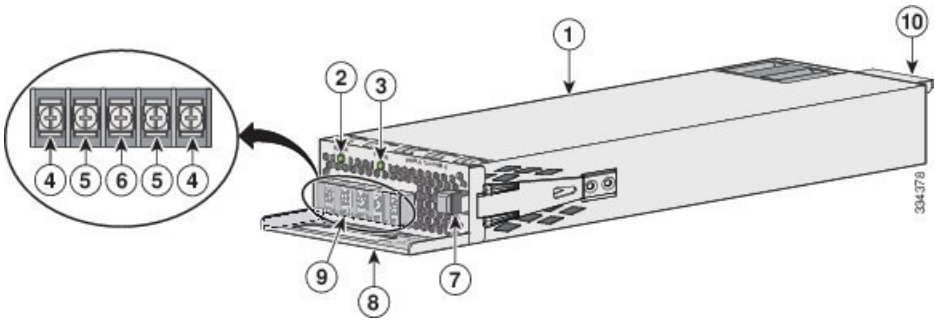

1	440-W DC power supply module	6	Grounding terminal
2	AC OK LED	7	Release latch
3	PS OK LED	8	Extraction handle
4	Input power terminals (positive polarity)	9	Terminal block safety cover

5	Input power terminals (negative polarity)	10	Keying feature

If no power supply is installed in a power supply slot, install a power supply slot cover.

Figure 5: Power Supply Slot Cover

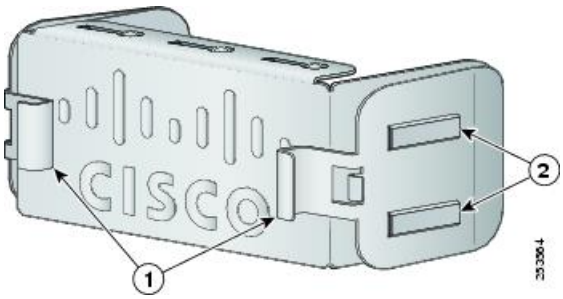

1	Release handles	2	Retainer clips

Table 2: Switch Power Supply Module LEDs

AC OK DC OK	Description	PS OK	Description
Off	No AC input power. No DC input power.	Off	Output is disabled, or input is outside operating range (AC LED is off). Output is disabled, or input is outside operating range (DC LED is off).
Green	AC input power present. DC input power present.	Green	Power output to switch active.
		Red	Output has failed.

Installation Guidelines

Observe these guidelines when removing or installing a power supply or fan module:

- Do not force the power supply or fan module into the slot. This can damage the pins on the switch if they are not aligned with the module.
- A power supply that is only partially connected to the switch can disrupt the system operation.
- Remove power from the power-supply module before removing or installing the module.
- The power supply is hot-swappable. In some configurations, such as full PoE+ or power sharing mode, removing a power supply causes powered devices to shut down until the power budget matches the input power of a single power supply. To minimize network interruption, hot swap the power supply under these circumstances:
    - The switch is in StackPower mode and sufficient power is available.
    - The switch is powered by other switches in a power stack, and no active backup is in progress.

For the switch commands that display available power budget, see the software configuration guide.

- The airflow for C3850-48XS switches will depend on the power supply and fans installed. Ensure that the power supplies are inserted correctly to match the corresponding fans. Power supplies with blue handles correspond to fans with blue handles, and power supplies with red handles correspond to fans with red handles.
  - For power supplies and fans with red handles, airflow is from the front panel to the rear panel (warm air is 'pulled out of' the switch.)
  - For power supplies and fans with blue handles, airflow is from the rear panel to the front panel (cool air is 'pushed into' the switch.)

Caution Do not operate the switch with one power-supply module slot empty. For proper chassis cooling, both module slots must be populated, with either a power supply or a blank module.

Warning This equipment must be grounded. Never defeat the ground conductor or operate the equipment in the absence of a suitably installed ground conductor. Contact the appropriate electrical inspection authority or an electrician if you are uncertain that suitable grounding is available.

Statement 1024

Warning Blank faceplates and cover panels serve three important functions: they prevent exposure to hazardous voltages and currents inside the chassis; they contain electromagnetic interference (EMI) that might disrupt other equipment; and they direct the flow of cooling air through the chassis. Do not operate the system unless all cards, faceplates, front covers, and rear covers are in place.

Statement 1029

Warning Do not reach into a vacant slot or chassis while you install or remove a module. Exposed circuitry could constitute an energy hazard.

Statement 206

Warning Only trained and qualified personnel should be allowed to install, replace, or service this equipment.

Statement 1030

Warning If a Cisco external power system is not connected to the switch, install the provided connector cover on the back of the switch.

Statement 386

Installing or Replacing an AC Power Supply

Procedure

Step 1 Turn off the power at its source.

Step 2 Remove the power cord from the power cord retainer.

Step 3 Remove the power cord from the power connector.

Step 4 Press the release latch at the right side of the power supply module inward and slide the power supply out.

Caution Do not leave the power-supply slot open for more than 90 seconds while the switch is operating.

Warning This unit might have more than one power supply connection. All connections must be removed to de-energize the unit. Statement 1028

Step 5 Insert the new power supply into the power-supply slot, and gently push it into the slot. When correctly inserted, the 350-W and 715-W power supplies (excluding the power cord retainer) are flush with the switch rear panel. The 1100-W power-supply module extends 1.5 inches from the switch rear panel.

Figure 6: Inserting the AC-Power Supply in the Catalyst WS-C3850 Switch

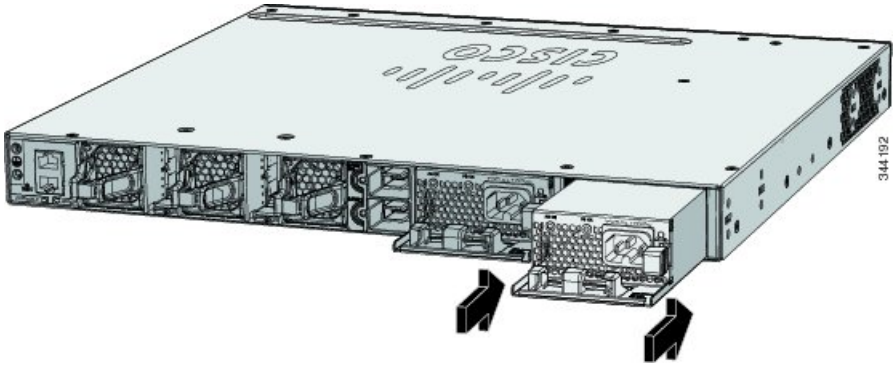

Figure 7: Inserting the AC-Power Supply in the Catalyst WS-C3850-48XS Switch

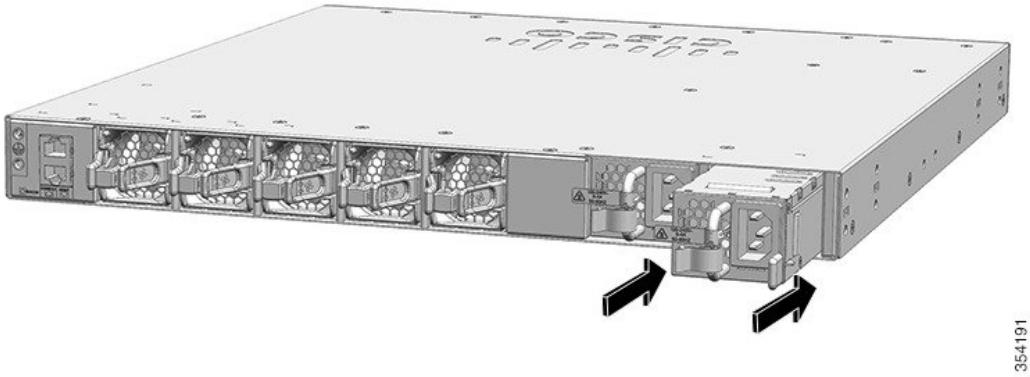

Step 6 (Optional) Make a loop in the power cord and thread it through the power cord retainer.

Figure 8: AC-Power Supply with Power Cord Retainer

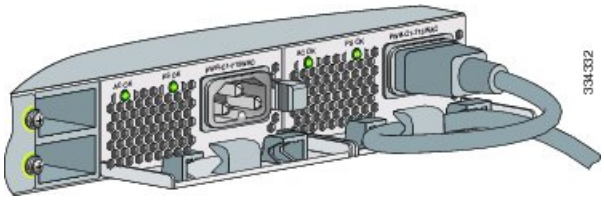

Figure 9: AC-Power Supply with Velcro Strap

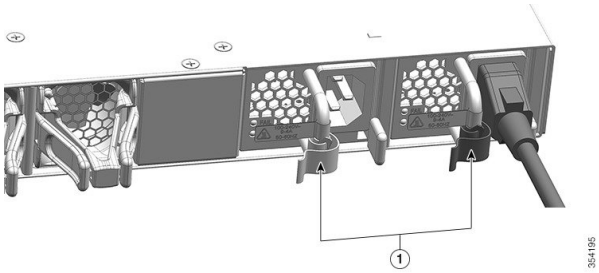

1	Velcro strap

Step 7 Connect the power cord to the power supply and to an AC power outlet. Turn on the power at the power source.

Step 8 Confirm that the power supply AC OK and PS OK LEDs are green.

Installing a DC Power Supply

Warning An exposed wire lead from a DC-input power source can conduct harmful levels of electricity. Be sure that no exposed portion of the DC-input power source wire extends from the terminal block plug. Statement 122

Warning Before performing any of the following procedures, ensure that power is removed from the DC circuit. Statement 1003

Warning This product relies on the building's installation for short-circuit (overcurrent) protection. Ensure that the protective device is rated not greater than: 20 A. Statement 1005

Warning A readily accessible two-poled disconnect device must be incorporated in the fixed wiring. Statement 1022

Warning Hazardous voltage or energy may be present on power terminals. Always replace cover when terminals are not in service. Be sure uninsulated conductors are not accessible when cover is in place. Statement 1086

Note The grounding architecture of this product is DC-isolated (DC-I).

Equipment That You Need

- Ratcheting torque screwdriver with a number-2 Phillips head that exerts up to 15 pound-force inches (lbf-in.) of pressure.
- Panduit crimping tool with optional controlled-cycle mechanism (model CT-720, CT-920, CT-920CH, CT-930, or CT-940CH).
- Wire-stripping tools.
- 12-gauge copper ground wire (insulated or not) for the single-hole ground connection.
- 8-gauge copper ground wire (insulated or not) for the dual-hole ground connection.
- Dual-hole ground lug and two screws (included in the DC power supply accessory kit) and single-hole ground lug and screw (included in the switch accessory kit). The dual-hole lug is required for the grounding of the switch in a NEBS installation where the DC supply is the only NEBS compliant power supply option.
- Four leads of 14-gauge copper wire.
- Four fork-type terminals from the DC power supply accessory kit. The terminals must be the proper size for M3 screws in a Dinkle DT-35-B25-style terminal block.

Grounding the Switch

Follow these steps to install either a single-hole ground lug or a dual-hole ground lug on the switch. Make sure to follow any grounding requirements at your site.

Before you begin

Follow the grounding procedures at your site and observe these warnings:

Warning This equipment must be grounded. Never defeat the ground conductor or operate the equipment in the absence of a suitably installed ground conductor. Contact the appropriate electrical inspection authority or an electrician if you are uncertain that suitable grounding is available. Statement 1024

Warning When installing or replacing the unit, the ground connection must always be made first and disconnected last. Statement 1046

Caution Follow the grounding procedure instructions, and use a UL-listed lug (included in the accessory kit).

Caution To comply with the Telcordia GR-1089 NEBS standard for electromagnetic compatibility and safety, connect the (Management Ethernet) ports only to intra-building or unexposed wiring or cable. The intrabuilding cable must be shielded and the shield must be grounded at both ends. The intra-building port(s) of the equipment or subassembly must not be metallically connected to interfaces that connect to the OSP or its wiring. These interfaces are designed for use as intra-building interfaces only (Type 2 or Type 4 ports as described in GR-1089-CORE) and require isolation from the exposed OSP cabling. The addition of Primary Protectors is not sufficient protection in order to connect these interfaces metallically to OSP wiring.

Procedure

Step 1 Use the ground lug screw and the lug ring for a single-ground connection. Use the dual-hole lug for a ground connection in a NEBS installation.

Step 2 Strip the 12-gauge or 8-gauge ground wire to 0.5 inch (12.7 mm) ± 0.02 inch (0.5 mm). Stripping more than the recommended amount of wire can leave exposed wire from the connector. Use 12-gauge copper ground wire for the single-ground connection. Use 8-gauge copper ground wire for the dual-ground connection.

Figure 10: Stripping the Ground Wire

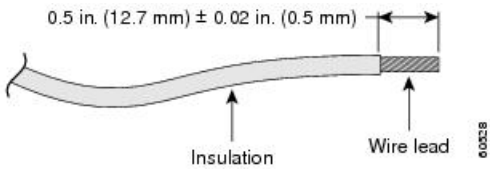

Step 3 Slide the open end of the ground lug over the exposed area of the wire.

Step 4 Using a Panduit crimping tool, crimp the ground lug to the wire.

Figure 11: Crimping the Ground Lug

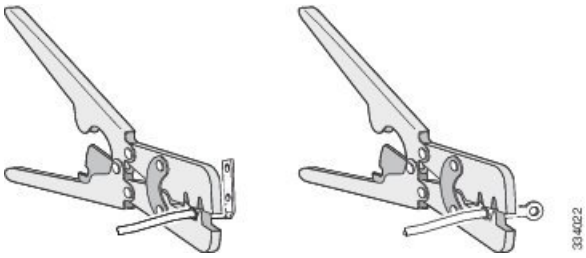

Step 5 Use the ground screw to attach the single-ground lug to the switch rear panel. Use two ground screws to attach the dual-hole lug to the switch rear panel.

Figure 12: Attaching the Ground Lug and Wire Assembly

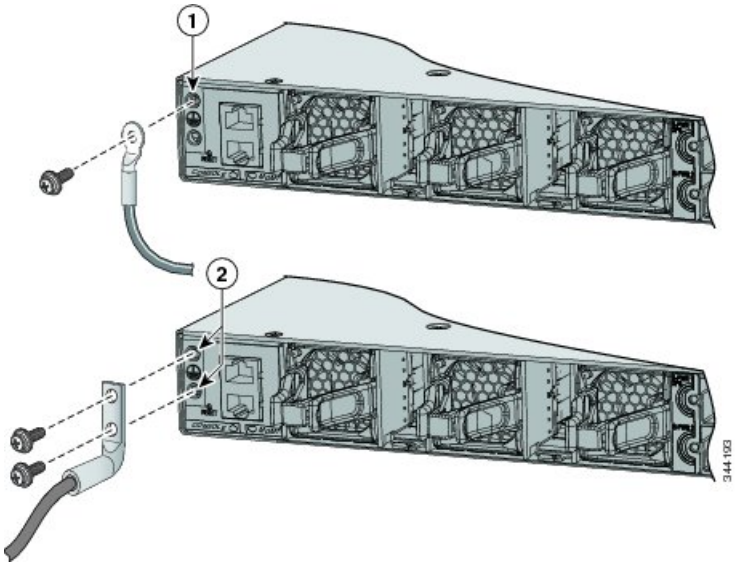

1	Single-hole ground screw and lug ring	2	Dual-hole ground adapter and dual-hole lug

Step 6 Using a ratcheting torque screwdriver, torque the ground-lug screws to 60 lbf-in. (960 ozf-in.).

Step 7 Connect the other end of the grounding wire to an appropriate grounding point at your site or to the rack.

Installing the DC Power Supply in the Switch

Before you begin

Before installing the power supply, see the Installation Guidelines, on page 4.

Procedure

Step 1 Turn off DC power. To ensure that power is off, change the circuit breakers to the OFF position, and tape the circuit-breaker switches in the OFF position.

Step 2 Remove the plastic safety cover from the power supply terminal blocks.

Note If you are not replacing a DC power supply, go to Step 5.

Step 3 Use a number-2 Phillips screwdriver to remove the DC-input power wires from the power terminals.

Step 4 Press the release latch at the right side of the power supply module inward, and pull the power supply out.

Step 5 Insert the power supply in the power-supply slot, and gently push it into the slot. When correctly installed, the DC power supply (excluding the extraction handle) is flush with the switch rear panel.

Figure 13: Inserting the DC-Power Supplyin the Catalyst WS-C3850 Switch

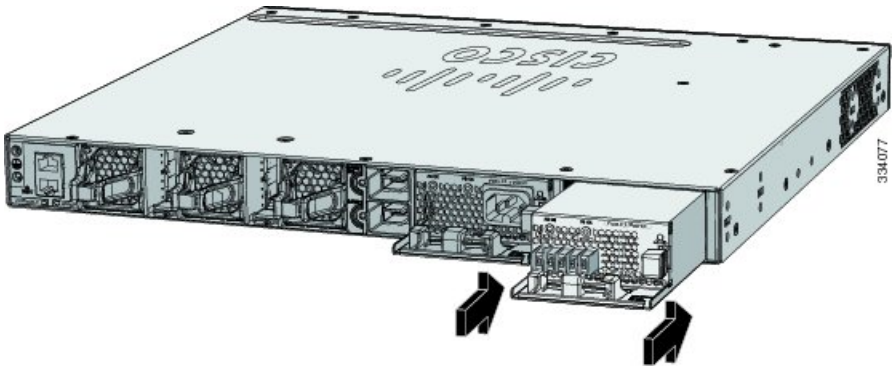

Figure 14: Inserting the DC-Power Supply in the Catalyst WS-C3850-48XS Switch

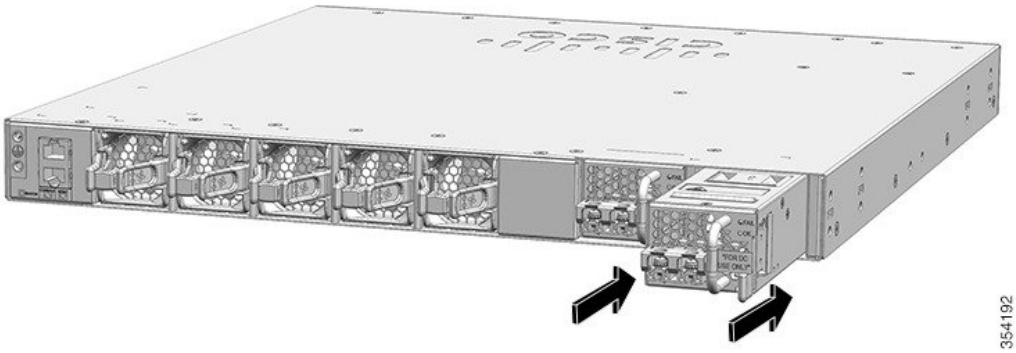

Step 6 Connect the input power as described in Wiring the DC Input Power Source, on page 11.

Wiring the DC Input Power Source

Procedure

Step 1 Using a wire-stripping tool, strip each of the four wires from the DC-input power source to the appropriate length for the terminals.

Warning Use copper conductors only. Statement 1025

Step 2 Using a Panduit crimping tool, crimp the fork-type terminals to the copper conductor, 90C, 12-AWG DC power input wires.

Step 3 Connect the DC-input power terminals to the terminal blocks. Make sure to match the polarity (negative to negative, positive to positive) when connecting the wires to the terminal blocks. Connect the ground wire to a grounded metal rack or to earth ground if the switch is not in a grounded rack.

Figure 15: DC Source A Isolated From Source B with No Common Ground

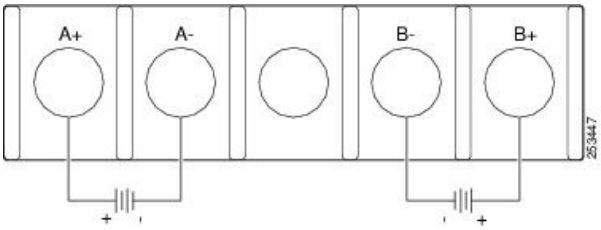

Figure 16: DC Source A and Source B Connections with Common Ground

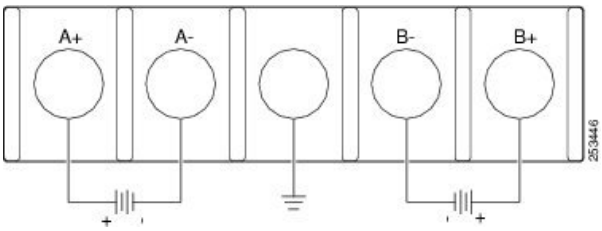

Step 4 Torque all terminal block screws to 11 lbf-in.

Step 5 Replace the terminal block safety cover.

Step 6 Move the DC power source circuit-breakers to the ON position.

Step 7 Confirm that the power supply DC OK and PS OK LEDs are green.

Finding the Power Supply Module Serial Number

If you contact Cisco Technical Assistance regarding a power supply module, you need to know the serial number. See the following illustrations to find the serial number. You can also use the CLI to find out the serial number.

Figure 17: 1100-W AC Power Supply Serial Number

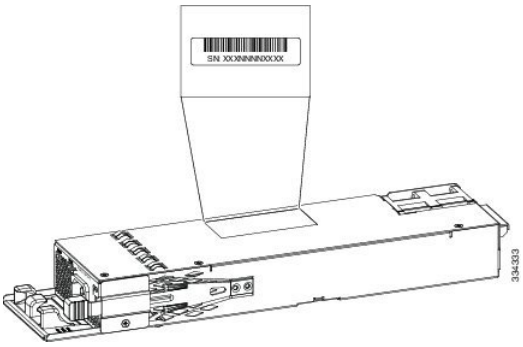

Figure 18: 715-W and 350-W AC Power Supply Serial Number

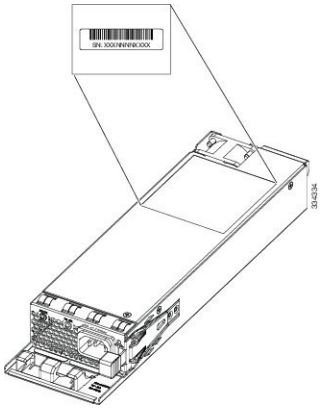

Figure 19: 440-W DC Power Supply Serial Number

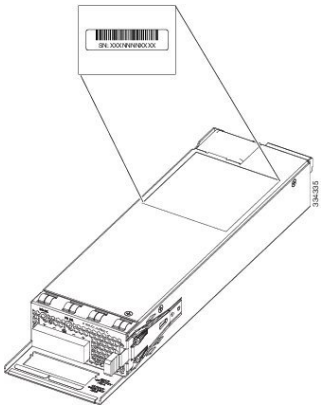

Figure 20: 750-W AC Power Supply Serial Number

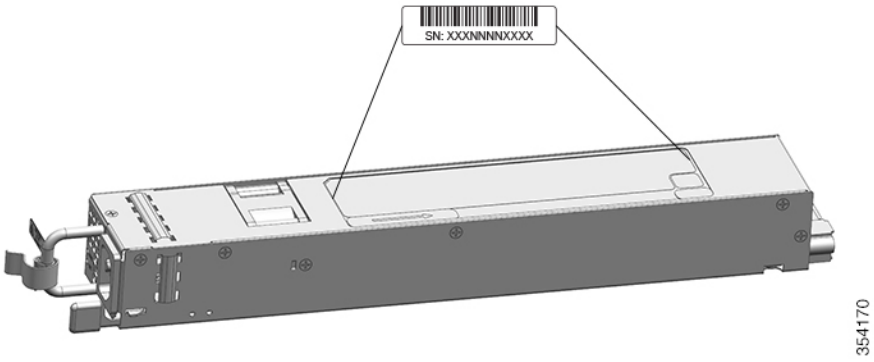

Figure 21: 750-W AC Power Supply Serial Number

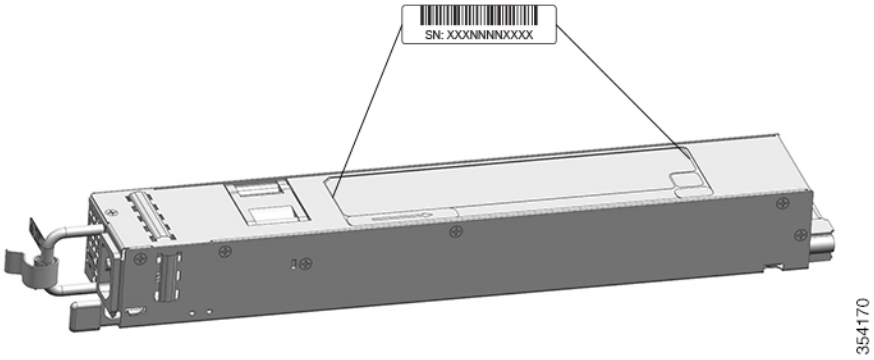

Figure 22: 750-W DC Power Supply Serial Number