Configuring VLANs

This chapter describes how to configure normal-range VLANs (VLAN IDs 1 to 1005) and extended-range VLANs (VLAN IDs 1006 to 4094) on the Catalyst 2960 switch. It includes information about VLAN membership modes, VLAN configuration modes, VLAN trunks, and dynamic VLAN assignment from a VLAN Membership Policy Server (VMPS).

Note For complete syntax and usage information for the commands used in this chapter, see the command reference for this release.

The chapter consists of these sections:

- Understanding VLANs, page 12-1
- Configuring Normal-Range VLANs, page 12-4
- Configuring Extended-Range VLANs, page 12-11
- Displaying VLANs, page 12-13
- Configuring VLAN Trunks, page 12-14
- Configuring VMPS, page 12-23

Understanding VLANs

A VLAN is a switched network that is logically segmented by function, project team, or application, without regard to the physical locations of the users. VLANs have the same attributes as physical LANs, but you can group end stations even if they are not physically located on the same LAN segment. Any switch port can belong to a VLAN, and unicast, broadcast, and multicast packets are forwarded and flooded only to end stations in the VLAN. Each VLAN is considered a logical network, and packets destined for stations that do not belong to the VLAN must be forwarded through a router or a switch supporting fallback bridging, as shown in Figure 12-1. Because a VLAN is considered a separate logical network, it contains its own bridge Management Information Base (MIB) information and can support its own implementation of spanning tree. See Chapter 15, “Configuring STP.”

Note Before you create VLANs, you must decide whether to use VLAN Trunking Protocol (VTP) to maintain global VLAN configuration for your network. For more information on VTP, see Chapter 13, “Configuring VTP.”

Figure 12-1 shows an example of VLANs segmented into logically defined networks.

Figure 12-1 VLANs as Logically Defined Networks

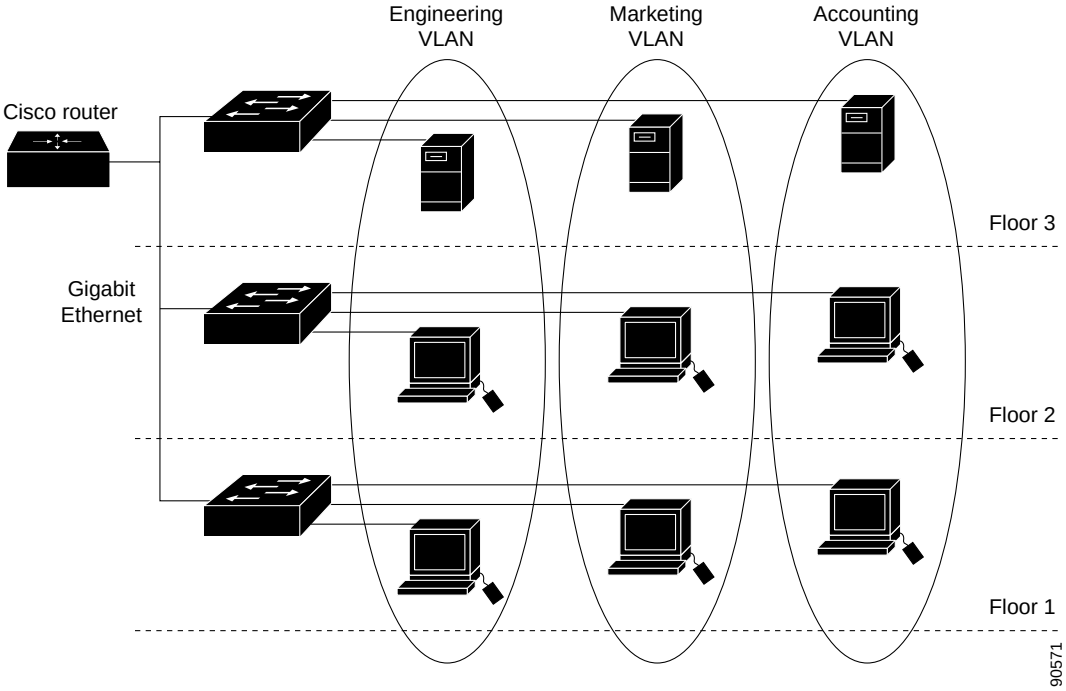

VLANs are often associated with IP subnetworks. For example, all the end stations in a particular IP subnet belong to the same VLAN. Interface VLAN membership on the switch is assigned manually on an interface-by-interface basis. When you assign switch interfaces to VLANs by using this method, it is known as interface-based, or static, VLAN membership.

Traffic between VLANs must be routed or fallback bridged.

Supported VLANs

The switch supports VLANs in VTP client, server, and transparent modes. VLANs are identified by a number from 1 to 4094. VLAN IDs 1002 through 1005 are reserved for Token Ring and FDDI VLANs. VTP only learns normal-range VLANs, with VLAN IDs 1 to 1005; VLAN IDs greater than 1005 are extended-range VLANs and are not stored in the VLAN database. The switch must be in VTP transparent mode when you create VLAN IDs from 1006 to 4094.

Although the switch supports a total of 255 (normal range and extended range) VLANs, the number of configured features affects the use of the switch hardware.

The switch supports per-VLAN spanning-tree plus (PVST+) or rapid PVST+ with a maximum of 128 spanning-tree instances. One spanning-tree instance is allowed per VLAN. See the "Normal-Range VLAN Configuration Guidelines" section on page 12-5 for more information about the number of spanning-tree instances and the number of VLANs. The switch supports only IEEE 802.1Q trunking methods for sending VLAN traffic over Ethernet ports.

VLAN Port Membership Modes

You configure a port to belong to a VLAN by assigning a membership mode that specifies the kind of traffic the port carries and the number of VLANs to which it can belong. Table 12-1 lists the membership modes and membership and VTP characteristics.

Table 12-1 Port Membership Modes and Characteristics

Membership Mode	VLAN Membership Characteristics	VTP Characteristics
Static-access	A static-access port can belong to one VLAN and is manually assigned to that VLAN. For more information, see the "Assigning Static-Access Ports to a VLAN" section on page 12-10.	VTP is not required. If you do not want VTP to globally propagate information, set the VTP mode to transparent. To participate in VTP, there must be at least one trunk port on the switch connected to a trunk port of a second switch.
Trunk (IEEE 802.1Q)	A trunk port is a member of all VLANs by default, including extended-range VLANs, but membership can be limited by configuring the allowed-VLAN list. You can also modify the pruning-eligible list to block flooded traffic to VLANs on trunk ports that are included in the list. For information about configuring trunk ports, see the "Configuring an Ethernet Interface as a Trunk Port" section on page 12-16.	VTP is recommended but not required. VTP maintains VLAN configuration consistency by managing the addition, deletion, and renaming of VLANs on a network-wide basis. VTP exchanges VLAN configuration messages with other switches over trunk links.
Dynamic access	A dynamic-access port can belong to one VLAN (VLAN ID 1 to 4094) and is dynamically assigned by a VMPS. The VMPS can be a Catalyst 5000 or Catalyst 6500 series switch, for example, but never a Catalyst 2960 switch. The Catalyst 2960 switch is a VMPS client. You can have dynamic-access ports and trunk ports on the same switch, but you must connect the dynamic-access port to an end station or hub and not to another switch. For configuration information, see the "Configuring Dynamic-Access Ports on VMPS Clients" section on page 12-26.	VTP is required. Configure the VMPS and the client with the same VTP domain name. To participate in VTP, at least one trunk port on the switch must be connected to a trunk port of a second switch.
Voice VLAN	A voice VLAN port is an access port attached to a Cisco IP Phone, configured to use one VLAN for voice traffic and another VLAN for data traffic from a device attached to the phone. For more information about voice VLAN ports, see Chapter 14, "Configuring Voice VLAN."	VTP is not required; it has no affect on a voice VLAN.

For more detailed definitions of access and trunk modes and their functions, see Table 12-4 on page 12-15.

When a port belongs to a VLAN, the switch learns and manages the addresses associated with the port on a per-VLAN basis. For more information, see the "Managing the MAC Address Table" section on page 6-19.

Configuring Normal-Range VLANs

Normal-range VLANs are VLANs with VLAN IDs 1 to 1005. If the switch is in VTP server or VTP transparent mode, you can add, modify or remove configurations for VLANs 2 to 1001 in the VLAN database. (VLAN IDs 1 and 1002 to 1005 are automatically created and cannot be removed.)

Note When the switch is in VTP transparent mode, you can also create extended-range VLANs (VLANs with IDs from 1006 to 4094), but these VLANs are not saved in the VLAN database. See the "Configuring Extended-Range VLANs" section on page 12-11.

Configurations for VLAN IDs 1 to 1005 are written to the file *vlan.dat* (VLAN database), and you can display them by entering the **show vlan** privileged EXEC command. The *vlan.dat* file is stored in flash memory.

Caution You can cause inconsistency in the VLAN database if you attempt to manually delete the *vlan.dat* file. If you want to modify the VLAN configuration, use the commands described in these sections and in the command reference for this release. To change the VTP configuration, see Chapter 13, "Configuring VTP."

You use the interface configuration mode to define the port membership mode and to add and remove ports from VLANs. The results of these commands are written to the running-configuration file, and you can display the file by entering the **show running-config** privileged EXEC command.

You can set these parameters when you create a new normal-range VLAN or modify an existing VLAN in the VLAN database:

- VLAN ID
- VLAN name
- VLAN type (Ethernet, Fiber Distributed Data Interface [FDDI], FDDI network entity title [NET], TrBRF, or TrCRF, Token Ring, Token Ring-Net)
- VLAN state (active or suspended)
- Maximum transmission unit (MTU) for the VLAN
- Security Association Identifier (SAID)
- Bridge identification number for TrBRF VLANs
- Ring number for FDDI and TrCRF VLANs
- Parent VLAN number for TrCRF VLANs
- Spanning Tree Protocol (STP) type for TrCRF VLANs
- VLAN number to use when translating from one VLAN type to another

Note This section does not provide configuration details for most of these parameters. For complete information on the commands and parameters that control VLAN configuration, see the command reference for this release.

These sections contain normal-range VLAN configuration information:

- Token Ring VLANs, page 12-5
- Normal-Range VLAN Configuration Guidelines, page 12-5
- VLAN Configuration Mode Options, page 12-6
- Saving VLAN Configuration, page 12-6
- Default Ethernet VLAN Configuration, page 12-7
- Creating or Modifying an Ethernet VLAN, page 12-8
- Deleting a VLAN, page 12-9
- Assigning Static-Access Ports to a VLAN, page 12-10

Token Ring VLANs

Although the switch does not support Token Ring connections, a remote device such as a Catalyst 5000 series switch with Token Ring connections could be managed from one of the supported switches. Switches running VTP Version 2 advertise information about these Token Ring VLANs:

- Token Ring TrBRF VLANs
- Token Ring TrCRF VLANs

For more information on configuring Token Ring VLANs, see the *Catalyst 5000 Series Software Configuration Guide*.

Normal-Range VLAN Configuration Guidelines

Follow these guidelines when creating and modifying normal-range VLANs in your network:

- The switch supports 255 VLANs in VTP client, server, and transparent modes.
- Normal-range VLANs are identified with a number between 1 and 1001. VLAN numbers 1002 through 1005 are reserved for Token Ring and FDDI VLANs.
- VLAN configuration for VLANs 1 to 1005 are always saved in the VLAN database. If the VTP mode is transparent, VTP and VLAN configuration are also saved in the switch running configuration file.
- The switch also supports VLAN IDs 1006 through 4094 in VTP transparent mode (VTP disabled). These are extended-range VLANs and configuration options are limited. Extended-range VLANs are not saved in the VLAN database. See the "Configuring Extended-Range VLANs" section on page 12-11.
- Before you can create a VLAN, the switch must be in VTP server mode or VTP transparent mode. If the switch is a VTP server, you must define a VTP domain or VTP will not function.
- The switch does not support Token Ring or FDDI media. The switch does not forward FDDI, FDDI-Net, TrCRF, or TrBRF traffic, but it does propagate the VLAN configuration through VTP.
- The switch supports 128 spanning-tree instances. If a switch has more active VLANs than supported spanning-tree instances, spanning tree can be enabled on 128 VLANs and is disabled on the remaining VLANs. If you have already used all available spanning-tree instances on a switch, adding another VLAN anywhere in the VTP domain creates a VLAN on that switch that is not running spanning-tree. If you have the default allowed list on the trunk ports of that switch (which is to allow all VLANs), the new VLAN is carried on all trunk ports. Depending on the topology of the network, this could create a loop in the new VLAN that would not be broken, particularly if there

are several adjacent switches that all have run out of spanning-tree instances. You can prevent this possibility by setting allowed lists on the trunk ports of switches that have used up their allocation of spanning-tree instances.

If the number of VLANs on the switch exceeds the number of supported spanning-tree instances, we recommend that you configure the IEEE 802.1s Multiple STP (MSTP) on your switch to map multiple VLANs to a single spanning-tree instance. For more information about MSTP, see Chapter 16, "Configuring MSTP."

VLAN Configuration Mode Options

You can configure normal-range VLANs (with VLAN IDs 1 to 1005) by using these two configuration modes:

- VLAN Configuration in config-vlan Mode, page 12-6

  You access config-vlan mode by entering the **vlan** *vlan-id* global configuration command.

- VLAN Configuration in VLAN Database Configuration Mode, page 12-6

  You access VLAN database configuration mode by entering the **vlan database** privileged EXEC command.

VLAN Configuration in config-vlan Mode

To access config-vlan mode, enter the **vlan** global configuration command with a VLAN ID. Enter a new VLAN ID to create a VLAN, or enter an existing VLAN ID to modify that VLAN. You can use the default VLAN configuration (Table 12-2) or enter multiple commands to configure the VLAN. For more information about commands available in this mode, see the **vlan** global configuration command description in the command reference for this release. When you have finished the configuration, you must exit config-vlan mode for the configuration to take effect. To display the VLAN configuration, enter the **show vlan** privileged EXEC command.

You must use this config-vlan mode when creating extended-range VLANs (VLAN IDs greater than 1005). See the "Configuring Extended-Range VLANs" section on page 12-11.

VLAN Configuration in VLAN Database Configuration Mode

To access VLAN database configuration mode, enter the **vlan database** privileged EXEC command. Then enter the **vlan** command with a new VLAN ID to create a VLAN, or enter an existing VLAN ID to modify the VLAN. You can use the default VLAN configuration (Table 12-2) or enter multiple commands to configure the VLAN. For more information about keywords available in this mode, see the **vlan** VLAN database configuration command description in the command reference for this release. When you have finished the configuration, you must enter **apply** or **exit** for the configuration to take effect. When you enter the **exit** command, it applies all commands and updates the VLAN database. VTP messages are sent to other switches in the VTP domain, and the privileged EXEC mode prompt appears.

Saving VLAN Configuration

The configurations of VLAN IDs 1 to 1005 are always saved in the VLAN database (vlan.dat file). If the VTP mode is transparent, they are also saved in the switch running configuration file. You can enter the **copy running-config startup-config** privileged EXEC command to save the configuration in the startup configuration file. To display the VLAN configuration, enter the **show vlan** privileged EXEC command.

When you save VLAN and VTP information (including extended-range VLAN configuration information) in the startup configuration file and reboot the switch, the switch configuration is selected as follows:

- If the VTP mode is transparent in the startup configuration, and the VLAN database and the VTP domain name from the VLAN database matches that in the startup configuration file, the VLAN database is ignored (cleared), and the VTP and VLAN configurations in the startup configuration file are used. The VLAN database revision number remains unchanged in the VLAN database.
- If the VTP mode or domain name in the startup configuration does not match the VLAN database, the domain name and VTP mode and configuration for the first 1005 VLANs use the VLAN database information.
- If VTP mode is server, the domain name and VLAN configuration for the first 1005 VLANs use the VLAN database information

Caution If the VLAN database configuration is used at startup and the startup configuration file contains extended-range VLAN configuration, this information is lost when the system boots up.

Default Ethernet VLAN Configuration

Table 12-2 shows the default configuration for Ethernet VLANs.

Note The switch supports Ethernet interfaces exclusively. Because FDDI and Token Ring VLANs are not locally supported, you only configure FDDI and Token Ring media-specific characteristics for VTP global advertisements to other switches.

Table 12-2 Ethernet VLAN Defaults and Ranges

Parameter	Default	Range
VLAN ID	1	1 to 4094. **Note** Extended-range VLANs (VLAN IDs 1006 to 4094) are not saved in the VLAN database.
VLAN name	*VLANxxxx*, where *xxxx* represents four numeric digits (including leading zeros) equal to the VLAN ID number	No range
IEEE 802.10 SAID	100001 (100000 plus the VLAN ID)	1 to 4294967294
MTU size	1500	1500 to 18190
Translational bridge 1	0	0 to 1005
Translational bridge 2	0	0 to 1005
VLAN state	active	active, suspend
Remote SPAN	disabled	enabled, disabled

Creating or Modifying an Ethernet VLAN

Each Ethernet VLAN in the VLAN database has a unique, 4-digit ID that can be a number from 1 to 1001. VLAN IDs 1002 to 1005 are reserved for Token Ring and FDDI VLANs. To create a normal-range VLAN to be added to the VLAN database, assign a number and name to the VLAN.

Note When the switch is in VTP transparent mode, you can assign VLAN IDs greater than 1006, but they are not added to the VLAN database. See the "Configuring Extended-Range VLANs" section on page 12-11.

For the list of default parameters that are assigned when you add a VLAN, see the "Configuring Normal-Range VLANs" section on page 12-4.

Beginning in privileged EXEC mode, follow these steps to use config-vlan mode to create or modify an Ethernet VLAN:

	Command	Purpose
Step 1	**configure terminal**	Enter global configuration mode.
Step 2	**vlan** *vlan-id*	Enter a VLAN ID, and enter config-vlan mode. Enter a new VLAN ID to create a VLAN, or enter an existing VLAN ID to modify that VLAN. **Note** The available VLAN ID range for this command is 1 to 4094. For information about adding VLAN IDs greater than 1005 (extended-range VLANs), see the "Configuring Extended-Range VLANs" section on page 12-11.
Step 3	**name** *vlan-name*	(Optional) Enter a name for the VLAN. If no name is entered for the VLAN, the default is to append the *vlan-id* with leading zeros to the word VLAN. For example, VLAN0004 is a default VLAN name for VLAN 4.
Step 4	**mtu** *mtu-size*	(Optional) Change the MTU size (or other VLAN characteristic).
Step 5	**remote-span**	(Optional) Configure the VLAN as the RSPAN VLAN for a remote SPAN session. For more information on remote SPAN, see Chapter 23, "Configuring SPAN and RSPAN."
Step 6	**end**	Return to privileged EXEC mode.
Step 7	**show vlan** {**name** *vlan-name* | **id** *vlan-id*}	Verify your entries.
Step 8	**copy running-config startup config**	(Optional) If the switch is in VTP transparent mode, the VLAN configuration is saved in the running configuration file as well as in the VLAN database. This saves the configuration in the switch startup configuration file.

To return the VLAN name to the default settings, use the **no name**, **no mtu**, or **no remote-span** config-vlan commands.

This example shows how to use config-vlan mode to create Ethernet VLAN 20, name it *test20*, and add it to the VLAN database:

```
Switch# configure terminal
Switch(config)# vlan 20
Switch(config-vlan)# name test20
Switch(config-vlan)# end
```

You can also create or modify Ethernet VLANs by using the VLAN database configuration mode.

Note VLAN database configuration mode does not support RSPAN VLAN configuration or extended-range VLANs.

Beginning in privileged EXEC mode, follow these steps to use VLAN database configuration mode to create or modify an Ethernet VLAN:

	Command	Purpose
Step 1	**vlan database**	Enter VLAN database configuration mode.
Step 2	**vlan** *vlan-id* **name** *vlan-name*	Add an Ethernet VLAN by assigning a number to it. The range is 1 to 1001. You can create or modify a range of consecutive VLANs by entering **vlan** *first-vlan-id* **end** *last-vlan-id*. **Note** When entering a VLAN ID in VLAN database configuration mode, do not enter leading zeros. If no name is entered for the VLAN, the default is to append the *vlan-id* with leading zeros to the word VLAN. For example, VLAN0004 is a default VLAN name for VLAN 4.
Step 3	**vlan** *vlan-id* **mtu** *mtu-size*	(Optional) To modify a VLAN, identify the VLAN and change a characteristic, such as the MTU size.
Step 4	**exit**	Update the VLAN database, propagate it throughout the administrative domain, and return to privileged EXEC mode.
Step 5	**show vlan** {**name** *vlan-name* | **id** *vlan-id*}	Verify your entries.
Step 6	**copy running-config startup config**	(Optional) If the switch is in VTP transparent mode, the VLAN configuration is saved in the running configuration file as well as in the VLAN database. This saves the configuration in the switch startup configuration file.

To return the VLAN name to the default settings, use the **no vlan** *vlan-id* **name** or **no vlan** *vlan-id* **mtu** VLAN database configuration command.

This example shows how to use VLAN configuration mode to create Ethernet VLAN 20, name it *test20*, and add it to the VLAN database:

```
Switch# vlan database
Switch(vlan)# vlan 20 name test20
Switch(vlan)# exit
APPLY completed.
Exiting....
```

Deleting a VLAN

When you delete a VLAN from a switch that is in VTP server mode, the VLAN is removed from the VLAN database for all switches in the VTP domain. When you delete a VLAN from a switch that is in VTP transparent mode, the VLAN is deleted only on that specific switch.

You cannot delete the default VLANs for the different media types: Ethernet VLAN 1 and FDDI or Token Ring VLANs 1002 to 1005.

Caution When you delete a VLAN, any ports assigned to that VLAN become inactive. They remain associated with the VLAN (and thus inactive) until you assign them to a new VLAN.

Beginning in privileged EXEC mode, follow these steps to delete a VLAN on the switch:

	Command	Purpose
Step 1	**configure terminal**	Enter global configuration mode.
Step 2	**no vlan** *vlan-id*	Remove the VLAN by entering the VLAN ID.
Step 3	**end**	Return to privileged EXEC mode.
Step 4	**show vlan brief**	Verify the VLAN removal.
Step 5	**copy running-config startup config**	(Optional) If the switch is in VTP transparent mode, the VLAN configuration is saved in the running configuration file as well as in the VLAN database. This saves the configuration in the switch startup configuration file.

To delete a VLAN by using VLAN database configuration mode, use the **vlan database** privileged EXEC command to enter VLAN database configuration mode and the **no vlan** *vlan-id* VLAN database configuration command.

Assigning Static-Access Ports to a VLAN

You can assign a static-access port to a VLAN without having VTP globally propagate VLAN configuration information by disabling VTP (VTP transparent mode).

If you are assigning a port on a cluster member switch to a VLAN, first use the **rcommand** privileged EXEC command to log in to the cluster member switch.

Note If you assign an interface to a VLAN that does not exist, the new VLAN is created. (See the "Creating or Modifying an Ethernet VLAN" section on page 12-8.)

Beginning in privileged EXEC mode, follow these steps to assign a port to a VLAN in the VLAN database:

	Command	Purpose
Step 1	**configure terminal**	Enter global configuration mode
Step 2	**interface** *interface-id*	Enter the interface to be added to the VLAN.
Step 3	**switchport mode access**	Define the VLAN membership mode for the port (Layer 2 access port).
Step 4	**switchport access vlan** *vlan-id*	Assign the port to a VLAN. Valid VLAN IDs are 1 to 4094.
Step 5	**end**	Return to privileged EXEC mode.
Step 6	**show running-config interface** *interface-id*	Verify the VLAN membership mode of the interface.

	Command	Purpose
Step 7	**show interfaces** *interface-id* **switchport**	Verify your entries in the *Administrative Mode* and the *Access Mode VLAN* fields of the display.
Step 8	**copy running-config startup-config**	(Optional) Save your entries in the configuration file.

To return an interface to its default configuration, use the **default interface** *interface-id* interface configuration command.

This example shows how to configure a port as an access port in VLAN 2:

```
Switch# configure terminal
Enter configuration commands, one per line.  End with CNTL/Z.
Switch(config)# interface gigabitethernet0/1
Switch(config-if)# switchport mode access
Switch(config-if)# switchport access vlan 2
Switch(config-if)# end
```

Configuring Extended-Range VLANs

When the switch is in VTP transparent mode (VTP disabled), you can create extended-range VLANs (in the range 1006 to 4094). Extended-range VLANs enable service providers to extend their infrastructure to a greater number of customers. The extended-range VLAN IDs are allowed for any switchport commands that allow VLAN IDs. You always use config-vlan mode (accessed by entering the **vlan** *vlan-id* global configuration command) to configure extended-range VLANs. The extended range is not supported in VLAN database configuration mode (accessed by entering the **vlan database** privileged EXEC command).

Extended-range VLAN configurations are not stored in the VLAN database, but because VTP mode is transparent, they are stored in the switch running configuration file, and you can save the configuration in the startup configuration file by using the **copy running-config startup-config** privileged EXEC command.

Note Although the switch supports 4094 VLAN IDs, see the "Supported VLANs" section on page 12-2 for the actual number of VLANs supported.

These sections contain extended-range VLAN configuration information:

- Default VLAN Configuration, page 12-11
- Extended-Range VLAN Configuration Guidelines, page 12-12
- Creating an Extended-Range VLAN, page 12-12

Default VLAN Configuration

See Table 12-2 on page 12-7 for the default configuration for Ethernet VLANs. You can change only the MTU size and the remote SPAN configuration state on extended-range VLANs; all other characteristics must remain at the default state.

Extended-Range VLAN Configuration Guidelines

Follow these guidelines when creating extended-range VLANs:

- To add an extended-range VLAN, you must use the **vlan** *vlan-id* global configuration command and access config-vlan mode. You cannot add extended-range VLANs in VLAN database configuration mode (accessed by entering the **vlan database** privileged EXEC command).
- VLAN IDs in the extended range are not saved in the VLAN database and are not recognized by VTP.
- You cannot include extended-range VLANs in the pruning eligible range.
- The switch must be in VTP transparent mode when you create extended-range VLANs. If VTP mode is server or client, an error message is generated, and the extended-range VLAN is rejected.
- You can set the VTP mode to transparent in global configuration mode or in VLAN database configuration mode. See the "Disabling VTP (VTP Transparent Mode)" section on page 13-12. You should save this configuration to the startup configuration so that the switch boots up in VTP transparent mode. Otherwise, you lose the extended-range VLAN configuration if the switch resets.
- STP is enabled by default on extended-range VLANs, but you can disable it by using the **no spanning-tree vlan** *vlan-id* global configuration command. When the maximum number of spanning-tree instances are on the switch, spanning tree is disabled on any newly created VLANs. If the number of VLANs on the switch exceeds the maximum number of spanning-tree instances, we recommend that you configure the IEEE 802.1s Multiple STP (MSTP) on your switch to map multiple VLANs to a single spanning-tree instance. For more information about MSTP, see Chapter 16, "Configuring MSTP."
- Although the switch supports a total of 255 (normal-range and extended-range) VLANs, the number of configured features affects the use of the switch hardware. If you try to create an extended-range VLAN and there are not enough hardware resources available, an error message is generated, and the extended-range VLAN is rejected.

Creating an Extended-Range VLAN

You create an extended-range VLAN in global configuration mode by entering the **vlan** global configuration command with a VLAN ID from 1006 to 4094. This command accesses the config-vlan mode. The extended-range VLAN has the default Ethernet VLAN characteristics (see Table 12-2) and the MTU size, and RSPAN configuration are the only parameters you can change. See the description of the **vlan** global configuration command in the command reference for the default settings of all parameters. If you enter an extended-range VLAN ID when the switch is not in VTP transparent mode, an error message is generated when you exit from config-vlan mode, and the extended-range VLAN is not created.

Extended-range VLANs are not saved in the VLAN database; they are saved in the switch running configuration file. You can save the extended-range VLAN configuration in the switch startup configuration file by using the **copy running-config startup-config** privileged EXEC command.

Beginning in privileged EXEC mode, follow these steps to create an extended-range VLAN:

	Command	Purpose
Step 1	**configure terminal**	Enter global configuration mode.
Step 2	**vtp mode transparent**	Configure the switch for VTP transparent mode, disabling VTP.

	Command	Purpose
Step 3	**vlan** *vlan-id*	Enter an extended-range VLAN ID and enter config-vlan mode. The range is 1006 to 4094.
Step 4	**mtu** *mtu-size*	(Optional) Modify the VLAN by changing the MTU size. **Note** Although all VLAN commands appear in the CLI help in config-vlan mode, only the **mtu** *mtu-size*, and **remote-span** commands are supported for extended-range VLANs.
Step 5	**remote-span**	(Optional) Configure the VLAN as the RSPAN VLAN. See the "Configuring a VLAN as an RSPAN VLAN" section on page 23-16.
Step 6	**end**	Return to privileged EXEC mode.
Step 7	**show vlan id** *vlan-id*	Verify that the VLAN has been created.
Step 8	**copy running-config startup config**	Save your entries in the switch startup configuration file. To save extended-range VLAN configurations, you need to save the VTP transparent mode configuration and the extended-range VLAN configuration in the switch startup configuration file. Otherwise, if the switch resets, it will default to VTP server mode, and the extended-range VLAN IDs will not be saved.

To delete an extended-range VLAN, use the **no vlan** *vlan-id* global configuration command.

The procedure for assigning static-access ports to an extended-range VLAN is the same as for normal-range VLANs. See the "Assigning Static-Access Ports to a VLAN" section on page 12-10.

This example shows how to create a new extended-range VLAN with all default characteristics, enter config-vlan mode, and save the new VLAN in the switch startup configuration file:

```
Switch(config)# vtp mode transparent
Switch(config)# vlan 2000
Switch(config-vlan)# end
Switch# copy running-config startup config
```

Displaying VLANs

Use the **show vlan** privileged EXEC command to display a list of all VLANs on the switch, including extended-range VLANs. The display includes VLAN status, ports, and configuration information. To view normal-range VLANs in the VLAN database (1 to 1005), use the **show** VLAN database configuration command (accessed by entering the **vlan database** privileged EXEC command).

Table 12-3 lists the commands for monitoring VLANs.

Table 12-3 VLAN Monitoring Commands

Command	Command Mode	Purpose
show	VLAN database configuration	Display status of VLANs in the VLAN database.
show current [*vlan-id*]	VLAN database configuration	Display status of all or the specified VLAN in the VLAN database.

Table 12-3 VLAN Monitoring Commands (continued)

Command	Command Mode	Purpose
show interfaces [**vlan** *vlan-id*]	Privileged EXEC	Display characteristics for all interfaces or for the specified VLAN configured on the switch.
show vlan [**id** *vlan-id*]	Privileged EXEC	Display parameters for all VLANs or the specified VLAN on the switch.

For more details about the show command options and explanations of output fields, see the command reference for this release.

Configuring VLAN Trunks

These sections contain this conceptual information:

- Trunking Overview, page 12-14
- Default Layer 2 Ethernet Interface VLAN Configuration, page 12-16
- Configuring an Ethernet Interface as a Trunk Port, page 12-16
- Configuring Trunk Ports for Load Sharing, page 12-20

Trunking Overview

A trunk is a point-to-point link between one or more Ethernet switch interfaces and another networking device such as a router or a switch. Ethernet trunks carry the traffic of multiple VLANs over a single link, and you can extend the VLANs across an entire network. The Catalyst 2960 switch supports IEEE 802.1Q encapsulation.

You can configure a trunk on a single Ethernet interface or on an EtherChannel bundle. For more information about EtherChannel, see Chapter 30, “Configuring EtherChannels.”

Ethernet trunk interfaces support different trunking modes (see Table 12-4). You can set an interface as trunking or nontrunking or to negotiate trunking with the neighboring interface. To autonegotiate trunking, the interfaces must be in the same VTP domain.

Trunk negotiation is managed by the Dynamic Trunking Protocol (DTP), which is a Point-to-Point Protocol. However, some internetworking devices might forward DTP frames improperly, which could cause misconfigurations.

To avoid this, you should configure interfaces connected to devices that do not support DTP to not forward DTP frames, that is, to turn off DTP.

- If you do not intend to trunk across those links, use the **switchport mode access** interface configuration command to disable trunking.
- To enable trunking to a device that does not support DTP, use the **switchport mode trunk** and **switchport nonegotiate** interface configuration commands to cause the interface to become a trunk but to not generate DTP frames.

Table 12-4 Layer 2 Interface Modes

Mode	Function
switchport mode access	Puts the interface (access port) into permanent nontrunking mode and negotiates to convert the link into a nontrunk link. The interface becomes a nontrunk interface regardless of whether or not the neighboring interface is a trunk interface.
switchport mode dynamic auto	Makes the interface able to convert the link to a trunk link. The interface becomes a trunk interface if the neighboring interface is set to *trunk* or *desirable* mode. The default switchport mode for all Ethernet interfaces is **dynamic auto**.
switchport mode dynamic desirable	Makes the interface actively attempt to convert the link to a trunk link. The interface becomes a trunk interface if the neighboring interface is set to *trunk*, *desirable*, or *auto* mode.
switchport mode trunk	Puts the interface into permanent trunking mode and negotiates to convert the neighboring link into a trunk link. The interface becomes a trunk interface even if the neighboring interface is not a trunk interface.
switchport nonegotiate	Prevents the interface from generating DTP frames. You can use this command only when the interface switchport mode is **access** or **trunk**. You must manually configure the neighboring interface as a trunk interface to establish a trunk link.

IEEE 802.1Q Configuration Considerations

The IEEE 802.1Q trunks impose these limitations on the trunking strategy for a network:

- In a network of Cisco switches connected through IEEE 802.1Q trunks, the switches maintain one spanning-tree instance for each VLAN allowed on the trunks. Non-Cisco devices might support one spanning-tree instance for all VLANs.

  When you connect a Cisco switch to a non-Cisco device through an IEEE 802.1Q trunk, the Cisco switch combines the spanning-tree instance of the VLAN of the trunk with the spanning-tree instance of the non-Cisco IEEE 802.1Q switch. However, spanning-tree information for each VLAN is maintained by Cisco switches separated by a cloud of non-Cisco IEEE 802.1Q switches. The non-Cisco IEEE 802.1Q cloud separating the Cisco switches is treated as a single trunk link between the switches.
- Make sure the native VLAN for an IEEE 802.1Q trunk is the same on both ends of the trunk link. If the native VLAN on one end of the trunk is different from the native VLAN on the other end, spanning-tree loops might result.
- Disabling spanning tree on the native VLAN of an IEEE 802.1Q trunk without disabling spanning tree on every VLAN in the network can potentially cause spanning-tree loops. We recommend that you leave spanning tree enabled on the native VLAN of an IEEE 802.1Q trunk or disable spanning tree on every VLAN in the network. Make sure your network is loop-free before disabling spanning tree.

Default Layer 2 Ethernet Interface VLAN Configuration

Table 12-5 shows the default Layer 2 Ethernet interface VLAN configuration.

Table 12-5 Default Layer 2 Ethernet Interface VLAN Configuration

Feature	Default Setting
Interface mode	**switchport mode dynamic auto**
Allowed VLAN range	VLANs 1 to 4094
VLAN range eligible for pruning	VLANs 2 to 1001
Default VLAN (for access ports)	VLAN 1
Native VLAN (for IEEE 802.1Q trunks)	VLAN 1

Configuring an Ethernet Interface as a Trunk Port

Because trunk ports send and receive VTP advertisements, to use VTP you must ensure that at least one trunk port is configured on the switch and that this trunk port is connected to the trunk port of a second switch. Otherwise, the switch cannot receive any VTP advertisements.

These sections contain this configuration information:

- Interaction with Other Features, page 12-16
- Defining the Allowed VLANs on a Trunk, page 12-18
- Changing the Pruning-Eligible List, page 12-19
- Configuring the Native VLAN for Untagged Traffic, page 12-19

Interaction with Other Features

Trunking interacts with other features in these ways:

- A trunk port cannot be a secure port.
- Trunk ports can be grouped into EtherChannel port groups, but all trunks in the group must have the same configuration. When a group is first created, all ports follow the parameters set for the first port to be added to the group. If you change the configuration of one of these parameters, the switch propagates the setting you entered to all ports in the group:
  - allowed-VLAN list.
  - STP port priority for each VLAN.
  - STP Port Fast setting.
  - trunk status: if one port in a port group ceases to be a trunk, all ports cease to be trunks.
- We recommend that you configure no more than 24 trunk ports in PVST mode and no more than 40 trunk ports in MST mode.
- If you try to enable IEEE 802.1x on a trunk port, an error message appears, and IEEE 802.1x is not enabled. If you try to change the mode of an IEEE 802.1x-enabled port to trunk, the port mode is not changed.

- A port in dynamic mode can negotiate with its neighbor to become a trunk port. If you try to enable IEEE 802.1x on a dynamic port, an error message appears, and IEEE 802.1x is not enabled. If you try to change the mode of an IEEE 802.1x-enabled port to dynamic, the port mode is not changed.

Configuring a Trunk Port

Beginning in privileged EXEC mode, follow these steps to configure a port as a trunk port:

	Command	Purpose
Step 1	**configure terminal**	Enter global configuration mode.
Step 2	**interface** *interface-id*	Specify the port to be configured for trunking, and enter interface configuration mode.
Step 3	**switchport mode** {**dynamic** {**auto** | **desirable**} | **trunk**}	Configure the interface as a Layer 2 trunk (required only if the interface is a Layer 2 access port or to specify the trunking mode). • **dynamic auto**—Set the interface to a trunk link if the neighboring interface is set to trunk or desirable mode. This is the default. • **dynamic desirable**—Set the interface to a trunk link if the neighboring interface is set to trunk, desirable, or auto mode. • **trunk**—Set the interface in permanent trunking mode and negotiate to convert the link to a trunk link even if the neighboring interface is not a trunk interface.
Step 4	**switchport access vlan** *vlan-id*	(Optional) Specify the default VLAN, which is used if the interface stops trunking.
Step 5	**switchport trunk native vlan** *vlan-id*	Specify the native VLAN for IEEE 802.1Q trunks.
Step 6	**end**	Return to privileged EXEC mode.
Step 7	**show interfaces** *interface-id* **switchport**	Display the switchport configuration of the interface in the *Administrative Mode* and the *Administrative Trunking Encapsulation* fields of the display.
Step 8	**show interfaces** *interface-id* **trunk**	Display the trunk configuration of the interface.
Step 9	**copy running-config startup-config**	(Optional) Save your entries in the configuration file.

To return an interface to its default configuration, use the **default interface** *interface-id* interface configuration command. To reset all trunking characteristics of a trunking interface to the defaults, use the **no switchport trunk** interface configuration command. To disable trunking, use the **switchport mode access** interface configuration command to configure the port as a static-access port.

This example shows how to configure a port as an IEEE 802.1Q trunk. The example assumes that the neighbor interface is configured to support IEEE 802.1Q trunking.

```
Switch# configure terminal
Enter configuration commands, one per line.  End with CNTL/Z.
Switch(config)# interface gigabitethernet0/2
Switch(config-if)# switchport mode dynamic desirable
Switch(config-if)# end
```

Defining the Allowed VLANs on a Trunk

By default, a trunk port sends traffic to and receives traffic from all VLANs. All VLAN IDs, 1 to 4094, are allowed on each trunk. However, you can remove VLANs from the allowed list, preventing traffic from those VLANs from passing over the trunk. To restrict the traffic a trunk carries, use the **switchport trunk allowed vlan remove** *vlan-list* interface configuration command to remove specific VLANs from the allowed list.

Note VLAN 1 is the default VLAN on all trunk ports in all Cisco switches, and it has previously been a requirement that VLAN 1 always be enabled on every trunk link. You can use the VLAN 1 minimization feature to disable VLAN 1 on any individual VLAN trunk link so that no user traffic (including spanning-tree advertisements) is sent or received on VLAN 1.

To reduce the risk of spanning-tree loops or storms, you can disable VLAN 1 on any individual VLAN trunk port by removing VLAN 1 from the allowed list. When you remove VLAN 1 from a trunk port, the interface continues to sent and receive management traffic, for example, Cisco Discovery Protocol (CDP), Port Aggregation Protocol (PAgP), Link Aggregation Control Protocol (LACP), DTP, and VTP in VLAN 1.

If a trunk port with VLAN 1 disabled is converted to a nontrunk port, it is added to the access VLAN. If the access VLAN is set to 1, the port will be added to VLAN 1, regardless of the **switchport trunk allowed** setting. The same is true for any VLAN that has been disabled on the port.

A trunk port can become a member of a VLAN if the VLAN is enabled, if VTP knows of the VLAN, and if the VLAN is in the allowed list for the port. When VTP detects a newly enabled VLAN and the VLAN is in the allowed list for a trunk port, the trunk port automatically becomes a member of the enabled VLAN. When VTP detects a new VLAN and the VLAN is not in the allowed list for a trunk port, the trunk port does not become a member of the new VLAN.

Beginning in privileged EXEC mode, follow these steps to modify the allowed list of a trunk:

	Command	Purpose
Step 1	**configure terminal**	Enter global configuration mode.
Step 2	**interface** *interface-id*	Specify the port to be configured, and enter interface configuration mode.
Step 3	**switchport mode trunk**	Configure the interface as a VLAN trunk port.
Step 4	**switchport trunk allowed vlan** {**add** | **all** | **except** | **remove**} *vlan-list*	(Optional) Configure the list of VLANs allowed on the trunk. For explanations about using the **add**, **all**, **except**, and **remove** keywords, see the command reference for this release. The *vlan-list* parameter is either a single VLAN number from 1 to 4094 or a range of VLANs described by two VLAN numbers, the lower one first, separated by a hyphen. Do not enter any spaces between comma-separated VLAN parameters or in hyphen-specified ranges. All VLANs are allowed by default.
Step 5	**end**	Return to privileged EXEC mode.
Step 6	**show interfaces** *interface-id* **switchport**	Verify your entries in the *Trunking VLANs Enabled* field of the display.
Step 7	**copy running-config startup-config**	(Optional) Save your entries in the configuration file.

To return to the default allowed VLAN list of all VLANs, use the **no switchport trunk allowed vlan** interface configuration command.

This example shows how to remove VLAN 2 from the allowed VLAN list on a port:

```
Switch(config)# interface gigabitethernet0/1
Switch(config-if)# switchport trunk allowed vlan remove 2
Switch(config-if)# end
```

Changing the Pruning-Eligible List

The pruning-eligible list applies only to trunk ports. Each trunk port has its own eligibility list. VTP pruning must be enabled for this procedure to take effect. The "Enabling VTP Pruning" section on page 13-14 describes how to enable VTP pruning.

Beginning in privileged EXEC mode, follow these steps to remove VLANs from the pruning-eligible list on a trunk port:

	Command	Purpose
Step 1	**configure terminal**	Enter global configuration mode.
Step 2	**interface** *interface-id*	Select the trunk port for which VLANs should be pruned, and enter interface configuration mode.
Step 3	**switchport trunk pruning vlan** {**add** | **except** | **none** | **remove**} *vlan-list* [,*vlan*[,*vlan*[,,,]]	Configure the list of VLANs allowed to be pruned from the trunk. (See the "VTP Pruning" section on page 13-4). For explanations about using the **add**, **except**, **none**, and **remove** keywords, see the command reference for this release. Separate nonconsecutive VLAN IDs with a comma and no spaces; use a hyphen to designate a range of IDs. Valid IDs are 2 to 1001. Extended-range VLANs (VLAN IDs 1006 to 4094) cannot be pruned. VLANs that are pruning-ineligible receive flooded traffic. The default list of VLANs allowed to be pruned contains VLANs 2 to 1001.
Step 4	**end**	Return to privileged EXEC mode.
Step 5	**show interfaces** *interface-id* **switchport**	Verify your entries in the *Pruning VLANs Enabled* field of the display.
Step 6	**copy running-config startup-config**	(Optional) Save your entries in the configuration file.

To return to the default pruning-eligible list of all VLANs, use the **no switchport trunk pruning vlan** interface configuration command.

Configuring the Native VLAN for Untagged Traffic

A trunk port configured with IEEE 802.1Q tagging can receive both tagged and untagged traffic. By default, the switch forwards untagged traffic in the native VLAN configured for the port. The native VLAN is VLAN 1 by default.

Note The native VLAN can be assigned any VLAN ID.

For information about IEEE 802.1Q configuration issues, see the "IEEE 802.1Q Configuration Considerations" section on page 12-15.

Beginning in privileged EXEC mode, follow these steps to configure the native VLAN on an IEEE 802.1Q trunk:

	Command	Purpose
Step 1	**configure terminal**	Enter global configuration mode.
Step 2	**interface** *interface-id*	Define the interface that is configured as the IEEE 802.1Q trunk, and enter interface configuration mode.
Step 3	**switchport trunk native vlan** *vlan-id*	Configure the VLAN that is sending and receiving untagged traffic on the trunk port. For *vlan-id*, the range is 1 to 4094.
Step 4	**end**	Return to privileged EXEC mode.
Step 5	**show interfaces** *interface-id* **switchport**	Verify your entries in the *Trunking Native Mode VLAN* field.
Step 6	**copy running-config startup-config**	(Optional) Save your entries in the configuration file.

To return to the default native VLAN, VLAN 1, use the **no switchport trunk native vlan** interface configuration command.

If a packet has a VLAN ID that is the same as the outgoing port native VLAN ID, the packet is sent untagged; otherwise, the switch sends the packet with a tag.

Configuring Trunk Ports for Load Sharing

Load sharing divides the bandwidth supplied by parallel trunks connecting switches. To avoid loops, STP normally blocks all but one parallel link between switches. Using load sharing, you divide the traffic between the links according to which VLAN the traffic belongs.

You configure load sharing on trunk ports by using STP port priorities or STP path costs. For load sharing using STP port priorities, both load-sharing links must be connected to the same switch. For load sharing using STP path costs, each load-sharing link can be connected to the same switch or to two different switches. For more information about STP, see Chapter 15, "Configuring STP."

Load Sharing Using STP Port Priorities

When two ports on the same switch form a loop, the switch uses the STP port priority to decide which port is enabled and which port is in a blocking state. You can set the priorities on a parallel trunk port so that the port carries all the traffic for a given VLAN. The trunk port with the higher priority (lower values) for a VLAN is forwarding traffic for that VLAN. The trunk port with the lower priority (higher values) for the same VLAN remains in a blocking state for that VLAN. One trunk port sends or receives all traffic for the VLAN.

Figure 12-2 shows two trunks connecting supported switches. In this example, the switches are configured as follows:

- VLANs 8 through 10 are assigned a port priority of 16 on Trunk 1.
- VLANs 3 through 6 retain the default port priority of 128 on Trunk 1.
- VLANs 3 through 6 are assigned a port priority of 16 on Trunk 2.

- VLANs 8 through 10 retain the default port priority of 128 on Trunk 2.

In this way, Trunk 1 carries traffic for VLANs 8 through 10, and Trunk 2 carries traffic for VLANs 3 through 6. If the active trunk fails, the trunk with the lower priority takes over and carries the traffic for all of the VLANs. No duplication of traffic occurs over any trunk port.

Figure 12-2 Load Sharing by Using STP Port Priorities

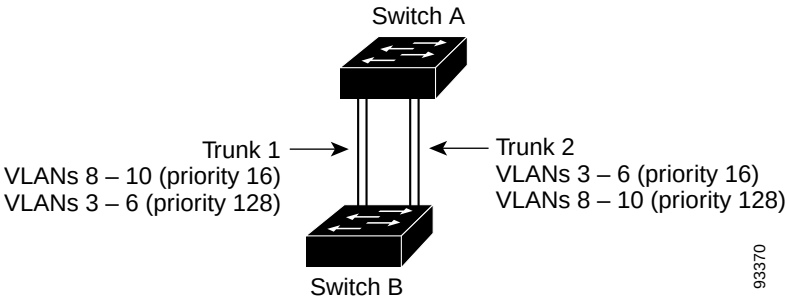

Beginning in privileged EXEC mode, follow these steps to configure the network shown in Figure 12-2.

	Command	Purpose
Step 1	**configure terminal**	Enter global configuration mode on Switch A.
Step 2	**vtp domain** *domain-name*	Configure a VTP administrative domain. The domain name can be 1 to 32 characters.
Step 3	**vtp mode server**	Configure Switch A as the VTP server.
Step 4	**end**	Return to privileged EXEC mode.
Step 5	**show vtp status**	Verify the VTP configuration on both Switch A and Switch B. In the display, check the *VTP Operating Mode* and the *VTP Domain Name* fields.
Step 6	**show vlan**	Verify that the VLANs exist in the database on Switch A.
Step 7	**configure terminal**	Enter global configuration mode.
Step 8	**interface gigabitethernet 0/1**	Define the interface to be configured as a trunk, and enter interface configuration mode.
Step 9	**switchport mode trunk**	Configure the port as a trunk port.
Step 10	**end**	Return to privileged EXEC mode.
Step 11	**show interfaces gigabitethernet 0/1 switchport**	Verify the VLAN configuration.
Step 12		Repeat Steps 7 through 10 on Switch A for a second port in the switch .
Step 13		Repeat Steps 7 through 10 on Switch B to configure the trunk ports that connect to the trunk ports configured on Switch A.
Step 14	**show vlan**	When the trunk links come up, VTP passes the VTP and VLAN information to Switch B. Verify that Switch B has learned the VLAN configuration.
Step 15	**configure terminal**	Enter global configuration mode on Switch A.

	Command	Purpose
Step 16	**interface gigabitethernet 0/1**	Define the interface to set the STP port priority, and enter interface configuration mode.
Step 17	**spanning-tree vlan 8-10 port-priority 16**	Assign the port priority of 16 for VLANs 8 through 10.
Step 18	**exit**	Return to global configuration mode.
Step 19	**interface gigabitethernet0/2**	Define the interface to set the STP port priority, and enter interface configuration mode.
Step 20	**spanning-tree vlan 3-6 port-priority 16**	Assign the port priority of 16 for VLANs 3 through 6.
Step 21	**end**	Return to privileged EXEC mode.
Step 22	**show running-config**	Verify your entries.
Step 23	**copy running-config startup-config**	(Optional) Save your entries in the configuration file.

Load Sharing Using STP Path Cost

You can configure parallel trunks to share VLAN traffic by setting different path costs on a trunk and associating the path costs with different sets of VLANs, blocking different ports for different VLANs. The VLANs keep the traffic separate and maintain redundancy in the event of a lost link.

In Figure 12-3, Trunk ports 1 and 2 are configured as 100BASE-T ports. These VLAN path costs are assigned:

- VLANs 2 through 4 are assigned a path cost of 30 on Trunk port 1.
- VLANs 8 through 10 retain the default 100BASE-T path cost on Trunk port 1 of 19.
- VLANs 8 through 10 are assigned a path cost of 30 on Trunk port 2.
- VLANs 2 through 4 retain the default 100BASE-T path cost on Trunk port 2 of 19.

Figure 12-3 Load-Sharing Trunks with Traffic Distributed by Path Cost

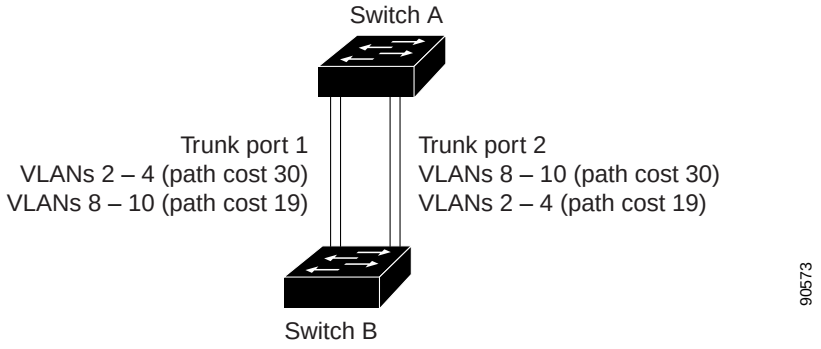

Beginning in privileged EXEC mode, follow these steps to configure the network shown in Figure 12-3:

	Command	Purpose
Step 1	**configure terminal**	Enter global configuration mode on Switch A.
Step 2	**interface gigabitethernet0/1**	Define the interface to be configured as a trunk, and enter interface configuration mode.
Step 3	**switchport mode trunk**	Configure the port as a trunk port.

	Command	Purpose
Step 4	**exit**	Return to global configuration mode.
Step 5		Repeat Steps 2 through 4 on a second interface in Switch A.
Step 6	**end**	Return to privileged EXEC mode.
Step 7	**show running-config**	Verify your entries. In the display, make sure that the interfaces are configured as trunk ports.
Step 8	**show vlan**	When the trunk links come up, Switch A receives the VTP information from the other switches. Verify that Switch A has learned the VLAN configuration.
Step 9	**configure terminal**	Enter global configuration mode.
Step 10	**interface gigabitethernet0/1**	Define the interface on which to set the STP cost, and enter interface configuration mode.
Step 11	**spanning-tree vlan 2-4 cost 30**	Set the spanning-tree path cost to 30 for VLANs 2 through 4.
Step 12	**end**	Return to global configuration mode.
Step 13		Repeat Steps 9 through 12 on the other configured trunk interface on Switch A, and set the spanning-tree path cost to 30 for VLANs 8, 9, and 10.
Step 14	**exit**	Return to privileged EXEC mode.
Step 15	**show running-config**	Verify your entries. In the display, verify that the path costs are set correctly for both trunk interfaces.
Step 16	**copy running-config startup-config**	(Optional) Save your entries in the configuration file.

Configuring VMPS

The VLAN Query Protocol (VQP) is used to support dynamic-access ports, which are not permanently assigned to a VLAN, but give VLAN assignments based on the MAC source addresses seen on the port. Each time an unknown MAC address is seen, the switch sends a VQP query to a remote VMPS; the query includes the newly seen MAC address and the port on which it was seen. The VMPS responds with a VLAN assignment for the port. The switch cannot be a VMPS server but can act as a client to the VMPS and communicate with it through VQP.

These sections contain this information:

- "Understanding VMPS" section on page 12-24
- "Default VMPS Client Configuration" section on page 12-25
- "VMPS Configuration Guidelines" section on page 12-25
- "Configuring the VMPS Client" section on page 12-26
- "Monitoring the VMPS" section on page 12-28
- "Troubleshooting Dynamic-Access Port VLAN Membership" section on page 12-29
- "VMPS Configuration Example" section on page 12-29

Understanding VMPS

Each time the client switch receives the MAC address of a new host, it sends a VQP query to the VMPS. When the VMPS receives this query, it searches its database for a MAC-address-to-VLAN mapping. The server response is based on this mapping and whether or not the server is in open or secure mode. In secure mode, the server shuts down the port when an illegal host is detected. In open mode, the server simply denies the host access to the port.

If the port is currently *unassigned* (that is, it does not yet have a VLAN assignment), the VMPS provides one of these responses:

- If the host is allowed on the port, the VMPS sends the client a *vlan-assignment* response containing the assigned VLAN name and allowing access to the host.
- If the host is not allowed on the port and the VMPS is in open mode, the VMPS sends an *access-denied* response.
- If the VLAN is not allowed on the port and the VMPS is in secure mode, the VMPS sends a *port-shutdown* response.

If the port already has a VLAN assignment, the VMPS provides one of these responses:

- If the VLAN in the database matches the current VLAN on the port, the VMPS sends an *success* response, allowing access to the host.
- If the VLAN in the database does not match the current VLAN on the port and active hosts exist on the port, the VMPS sends an *access-denied* or a *port-shutdown* response, depending on the secure mode of the VMPS.

If the switch receives an *access-denied* response from the VMPS, it continues to block traffic to and from the host MAC address. The switch continues to monitor the packets directed to the port and sends a query to the VMPS when it identifies a new host address. If the switch receives a *port-shutdown* response from the VMPS, it disables the port. The port must be manually re-enabled by using Network Assistant, the CLI, or SNMP.

Dynamic-Access Port VLAN Membership

A dynamic-access port can belong to only one VLAN with an ID from 1 to 4094. When the link comes up, the switch does not forward traffic to or from this port until the VMPS provides the VLAN assignment. The VMPS receives the source MAC address from the first packet of a new host connected to the dynamic-access port and attempts to match the MAC address to a VLAN in the VMPS database.

If there is a match, the VMPS sends the VLAN number for that port. If the client switch was not previously configured, it uses the domain name from the first VTP packet it receives on its trunk port from the VMPS. If the client switch was previously configured, it includes its domain name in the query packet to the VMPS to obtain its VLAN number. The VMPS verifies that the domain name in the packet matches its own domain name before accepting the request and responds to the client with the assigned VLAN number for the client. If there is no match, the VMPS either denies the request or shuts down the port (depending on the VMPS secure mode setting).

Multiple hosts (MAC addresses) can be active on a dynamic-access port if they are all in the same VLAN; however, the VMPS shuts down a dynamic-access port if more than 20 hosts are active on the port.

If the link goes down on a dynamic-access port, the port returns to an isolated state and does not belong to a VLAN. Any hosts that come online through the port are checked again through the VQP with the VMPS before the port is assigned to a VLAN.

Dynamic-access ports can be used for direct host connections, or they can connect to a network. A maximum of 20 MAC addresses are allowed per port on the switch. A dynamic-access port can belong to only one VLAN at a time, but the VLAN can change over time, depending on the MAC addresses seen.

Default VMPS Client Configuration

Table 12-6 shows the default VMPS and dynamic-access port configuration on client switches.

Table 12-6 Default VMPS Client and Dynamic-Access Port Configuration

Feature	Default Setting
VMPS domain server	None
VMPS reconfirm interval	60 minutes
VMPS server retry count	3
Dynamic-access ports	None configured

VMPS Configuration Guidelines

These guidelines and restrictions apply to dynamic-access port VLAN membership:

- You should configure the VMPS before you configure ports as dynamic-access ports.
- When you configure a port as a dynamic-access port, the spanning-tree Port Fast feature is automatically enabled for that port. The Port Fast mode accelerates the process of bringing the port into the forwarding state.
- IEEE 802.1x ports cannot be configured as dynamic-access ports. If you try to enable IEEE 802.1x on a dynamic-access (VQP) port, an error message appears, and IEEE 802.1x is not enabled. If you try to change an IEEE 802.1x-enabled port to dynamic VLAN assignment, an error message appears, and the VLAN configuration is not changed.
- Trunk ports cannot be dynamic-access ports, but you can enter the **switchport access vlan dynamic** interface configuration command for a trunk port. In this case, the switch retains the setting and applies it if the port is later configured as an access port.

  You must turn off trunking on the port before the dynamic-access setting takes effect.
- Dynamic-access ports cannot be monitor ports.
- Secure ports cannot be dynamic-access ports. You must disable port security on a port before it becomes dynamic.
- Dynamic-access ports cannot be members of an EtherChannel group.
- Port channels cannot be configured as dynamic-access ports.
- The VTP management domain of the VMPS client and the VMPS server must be the same.
- The VLAN configured on the VMPS server should not be a voice VLAN.

Configuring the VMPS Client

You configure dynamic VLANs by using the VMPS (server). The switch can be a VMPS client; it cannot be a VMPS server.

Entering the IP Address of the VMPS

You must first enter the IP address of the server to configure the switch as a client.

Note If the VMPS is being defined for a cluster of switches, enter the address on the command switch.

Beginning in privileged EXEC mode, follow these steps to enter the IP address of the VMPS:

	Command	Purpose
Step 1	**configure terminal**	Enter global configuration mode.
Step 2	**vmps server** *ipaddress* **primary**	Enter the IP address of the switch acting as the primary VMPS server.
Step 3	**vmps server** *ipaddress*	(Optional) Enter the IP address of the switch acting as a secondary VMPS server. You can enter up to three secondary server addresses.
Step 4	**end**	Return to privileged EXEC mode.
Step 5	**show vmps**	Verify your entries in the *VMPS Domain Server* field of the display.
Step 6	**copy running-config startup-config**	(Optional) Save your entries in the configuration file.

Note You must have IP connectivity to the VMPS for dynamic-access ports to work. You can test for IP connectivity by pinging the IP address of the VMPS and verifying that you get a response.

Configuring Dynamic-Access Ports on VMPS Clients

If you are configuring a port on a cluster member switch as a dynamic-access port, first use the **rcommand** privileged EXEC command to log in to the cluster member switch.

Caution Dynamic-access port VLAN membership is for end stations or hubs connected to end stations. Connecting dynamic-access ports to other switches can cause a loss of connectivity.

Beginning in privileged EXEC mode, follow these steps to configure a dynamic-access port on a VMPS client switch:

	Command	Purpose
Step 1	**configure terminal**	Enter global configuration mode.
Step 2	**interface** *interface-id*	Specify the switch port that is connected to the end station, and enter interface configuration mode.
Step 3	**switchport mode access**	Set the port to access mode.
Step 4	**switchport access vlan dynamic**	Configure the port as eligible for dynamic VLAN membership. The dynamic-access port must be connected to an end station.
Step 5	**end**	Return to privileged EXEC mode.
Step 6	**show interfaces** *interface-id* **switchport**	Verify your entries in the *Operational Mode* field of the display.
Step 7	**copy running-config startup-config**	(Optional) Save your entries in the configuration file.

To return an interface to its default configuration, use the **default interface** *interface-id* interface configuration command. To return an interface to its default switchport mode (dynamic auto), use the **no switchport mode** interface configuration command. To reset the access mode to the default VLAN for the switch, use the **no switchport access vlan** interface configuration command.

Reconfirming VLAN Memberships

Beginning in privileged EXEC mode, follow these steps to confirm the dynamic-access port VLAN membership assignments that the switch has received from the VMPS:

	Command	Purpose
Step 1	**vmps reconfirm**	Reconfirm dynamic-access port VLAN membership.
Step 2	**show vmps**	Verify the dynamic VLAN reconfirmation status.

Changing the Reconfirmation Interval

VMPS clients periodically reconfirm the VLAN membership information received from the VMPS.You can set the number of minutes after which reconfirmation occurs.

If you are configuring a member switch in a cluster, this parameter must be equal to or greater than the reconfirmation setting on the command switch. You must also first use the **rcommand** privileged EXEC command to log in to the member switch.

Beginning in privileged EXEC mode, follow these steps to change the reconfirmation interval:

	Command	Purpose
Step 1	**configure terminal**	Enter global configuration mode.
Step 2	**vmps reconfirm** *minutes*	Enter the number of minutes between reconfirmations of the dynamic VLAN membership. The range is 1 to 120. The default is 60 minutes.
Step 3	**end**	Return to privileged EXEC mode.
Step 4	**show vmps**	Verify the dynamic VLAN reconfirmation status in the *Reconfirm Interval* field of the display.
Step 5	**copy running-config startup-config**	(Optional) Save your entries in the configuration file.

To return the switch to its default setting, use the **no vmps reconfirm** global configuration command.

Changing the Retry Count

Beginning in privileged EXEC mode, follow these steps to change the number of times that the switch attempts to contact the VMPS before querying the next server:

	Command	Purpose
Step 1	**configure terminal**	Enter global configuration mode.
Step 2	**vmps retry** *count*	Change the retry count. The retry range is 1 to 10; the default is 3.
Step 3	**end**	Return to privileged EXEC mode.
Step 4	**show vmps**	Verify your entry in the *Server Retry Count* field of the display.
Step 5	**copy running-config startup-config**	(Optional) Save your entries in the configuration file.

To return the switch to its default setting, use the **no vmps retry** global configuration command.

Monitoring the VMPS

You can display information about the VMPS by using the **show vmps** privileged EXEC command. The switch displays this information about the VMPS:

- VMPS VQP Version—the version of VQP used to communicate with the VMPS. The switch queries the VMPS that is using VQP Version 1.
- Reconfirm Interval—the number of minutes the switch waits before reconfirming the VLAN-to-MAC-address assignments.
- Server Retry Count—the number of times VQP resends a query to the VMPS. If no response is received after this many tries, the switch starts to query the secondary VMPS.
- VMPS domain server—the IP address of the configured VLAN membership policy servers. The switch sends queries to the one marked *current*. The one marked *primary* is the primary server.
- VMPS Action—the result of the most recent reconfirmation attempt. A reconfirmation attempt can occur automatically when the reconfirmation interval expires, or you can force it by entering the **vmps reconfirm** privileged EXEC command or its Network Assistant or SNMP equivalent.

This is an example of output for the **show vmps** privileged EXEC command:

```
Switch# show vmps
VQP Client Status:
--------------------
VMPS VQP Version:   1
Reconfirm Interval: 60 min
Server Retry Count: 3
VMPS domain server: 172.20.128.86 (primary, current)
                    172.20.128.87

Reconfirmation status
---------------------
VMPS Action:         other
```

Troubleshooting Dynamic-Access Port VLAN Membership

The VMPS shuts down a dynamic-access port under these conditions:

- The VMPS is in secure mode, and it does not allow the host to connect to the port. The VMPS shuts down the port to prevent the host from connecting to the network.
- More than 20 active hosts reside on a dynamic-access port.

To re-enable a disabled dynamic-access port, enter the **shutdown** interface configuration command followed by the **no shutdown** interface configuration command.

VMPS Configuration Example

Figure 12-4 shows a network with a VMPS server switch and VMPS client switches with dynamic-access ports. In this example, these assumptions apply:

- The VMPS server and the VMPS client are separate switches.
- The Catalyst 6500 series Switch A is the primary VMPS server.
- The Catalyst 6500 series Switch C and Switch J are secondary VMPS servers.
- End stations are connected to the clients, Switch B and Switch I.
- The database configuration file is stored on the TFTP server with the IP address 172.20.22.7.
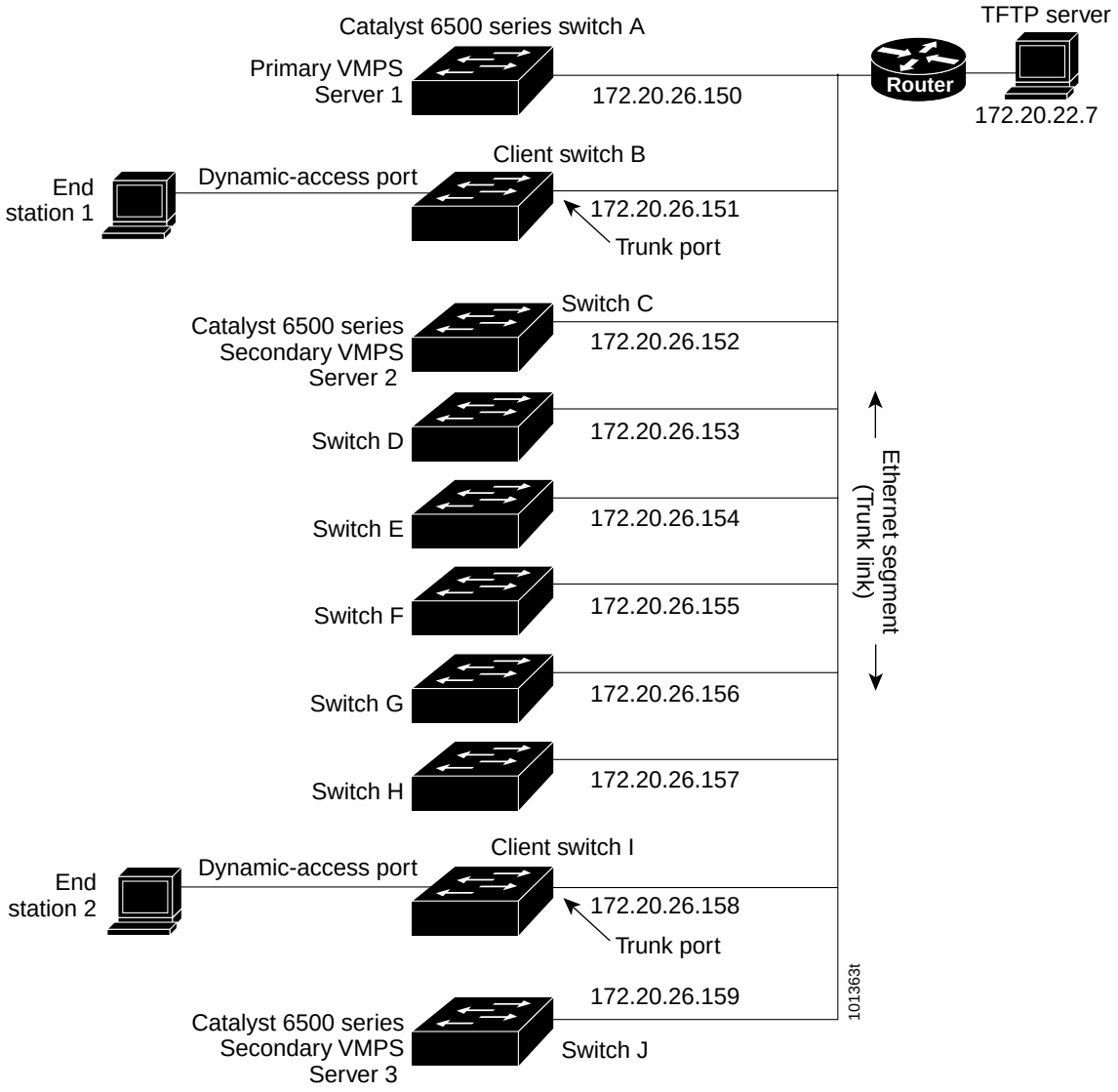
Figure 12-4 Dynamic Port VLAN Membership Configuration