Installing the Chassis

- Installation Options with Rack-Mount Kits, on page 1
- Install a Rack, on page 1
- Unpacking and Inspecting a New Switch, on page 2
- Planning How to Position the Chassis in the Rack, on page 3
- Installing the Chassis in a Two-Post Rack, on page 4
- Installing the Chassis in a Four-Post Rack, on page 7
- Grounding the Chassis, on page 12
- Starting the Switch, on page 14

Installation Options with Rack-Mount Kits

The rack-mount kit enables you to install the switch into racks of varying depths. You can position the switch with easy access to either the port connections or the fan and power supply modules.

You can install the switch using the following rack-mount options:

- Rack-mount kit (N9K-C9300-RMK) which you can order from Cisco.

  For four post racks.

The rack or cabinet that you use must meet the requirements listed the in General Requirements for Cabinets and Racks section.

Note You are responsible for verifying that your rack and rack-mount hardware comply with the guidelines that are described in this doc.

Install a Rack

Before you install the switch, you must install a standard two- or four-post, 19-inch EIA data center rack (or a cabinet that contains such a rack) that meets the requirements listed in Overview of Racks.

Step 1 Bolt the rack to the concrete subfloor before moving the chassis onto it.

Warning **Statement 1048—**Rack Stabilization

The rack stabilizing mechanism must be in place, or the rack must be bolted to the floor before installation or servicing. Failure to stabilize the rack can cause bodily injury.

Step 2 If the rack has bonded construction, connect it to the earth ground. This action enables you to easily ground the switch and its components and to ground your electrostatic discharge (ESD) wrist strap to prevent damaging discharges when you handle ungrounded components before installing them.

Step 3 Include one or two power sources at the rack. For AC power, provide a power receptacle. For DC power, provide a circuit breaker with terminals for connecting power cables.

Warning **Statement 1018—**Supply Circuit

To reduce risk of electric shock and fire, take care when connecting units to the supply circuit so that wiring is not overloaded.

Note If you are not using power redundancy or are using *n*+1 redundancy, you need only one power source. If you are using *n*+*n* redundancy, you need two power sources.

Unpacking and Inspecting a New Switch

Before you install a new chassis, you need to unpack and inspect it to be sure that you have all the items that you ordered and verify that the switch was not damaged during shipment. If anything is damaged or missing, contact your customer representative immediately.

Caution When you handle the chassis or its components, you must follow ESD protocol at all times to prevent ESD damage. This protocol includes but is not limited to wearing an ESD wrist strap that you connect to the earth ground.

Tip Do not discard the shipping container when you unpack the switch. Flatten the shipping cartons and store them. If you need to move or ship the system in the future, you will need this container.

Step 1 Compare the shipment to the equipment list that is provided by your customer service representative and verify that you have received all of the ordered items.

The shipment should include the following:

- Switch chassis, which includes the following installed components:
  - One uplink module:
    - M6PQ uplink module
    - M6PQ-E uplink module
    - M12PQ uplink module

- Two power supplies (any combination of the following with the airflow direction being the same as for the fan modules):
  - 650-W AC power supply
    - Port-side exhaust airflow with blue coloring (N9K-PAC-650W-B)
    - Port-side intake airflow with burgundy coloring (N9K-PAC-650W)
  - 930-W DC power supply
    - Port-side exhaust airflow with gray coloring (UCS-PSU-6332-DC)
    - Port-side intake airflow with green coloring (UCSC-PDU-930WDC)
- Three fan modules (all fan and power supply modules must have the same airflow direction)
  - Port-side exhaust airflow with blue coloring (N9K-C9300-FAN2-B)
  - Port-side intake airflow with burgundy coloring (N9K-C9300-FAN2)

- Switch accessory kit
- Rack mount kit

Step 2 Check the contents of the box for damage.

Step 3 If you notice any discrepancies or damage, send the following information to your customer service representative by email:

- Invoice number of the shipper (see the packing slip)
- Model and serial number of the missing or damaged unit
- Description of the problem and how it affects the installation

Planning How to Position the Chassis in the Rack

The switch is designed so that you can have coolant air flow through the switch in one of the two following directions:

- Enter the port side and exhaust out the power supply side (port-side intake airflow)
- Enter the power supply side and exhaust out the port side (port-side exhaust airflow)

For port-side intake airflow, the switch must have port-side intake fan and AC power supply modules with one or more of the following colorings:

- Burgundy coloring on fan modules and AC power supplies
- Green coloring on DC power supplies

For port-side exhaust airflow, the switch must have port-side exhaust fan and AC power supply modules with one or more of the following colorings:

- Blue coloring on fan modules and AC power supplies
- Gray coloring on DC power supplies

You can plan the positioning of the switch so that its ports are located close to ports on connected devices or so that the fan and power supply modules are conveniently located in a maintenance aisle, and then order the modules that move coolant air in the appropriate direction from the cold aisle to the hot aisle.

Note All fan and power supply modules in the same switch must operate with the same direction of airflow and the air intake portion of the switch must be located in a cold aisle.

Installing the Chassis in a Two-Post Rack

Before you install the chassis, be sure that the rack is fully secured to the data center floor.

You must attach mounting brackets to the chassis before mounting the chassis.

Attaching Center-Mount Brackets to the Chassis

You need to attach a right-angled bracket to each side of the chassis. This bracket centers the chassis and secures it in place on a two-post rack.

Warning **Statement 1006—**Chassis Warning for Rack-Mounting and Servicing

To prevent bodily injury when mounting or servicing this unit in a rack, you must take special precautions to ensure that the system remains stable. The following guidelines are provided to ensure your safety:

- This unit should be mounted at the bottom of the rack if it is the only unit in the rack.
- When mounting this unit in a partially filled rack, load the rack from the bottom to the top with the heaviest component at the bottom of the rack.
- If the rack is provided with stabilizing devices, install the stabilizers before mounting or servicing the unit in the rack.

Before you begin

- You must separately order the center-mount brackets if you are installing the chassis in a two-post rack. These brackets do not ship with the chassis unless you specifically order them.
- You must have the following tools and equipment:
  - Manual Phillips-head torque screwdriver
  - Center-mount bracket kit

Step 1 Align one of the two center-mount brackets on the left or right side of the chassis and be sure that the angled portion is facing the front of the chassis (see the following figure).

Be sure to align four of the screw holes on the larger side of the bracket with the four screw holes near the center of the left or right side of the chassis.

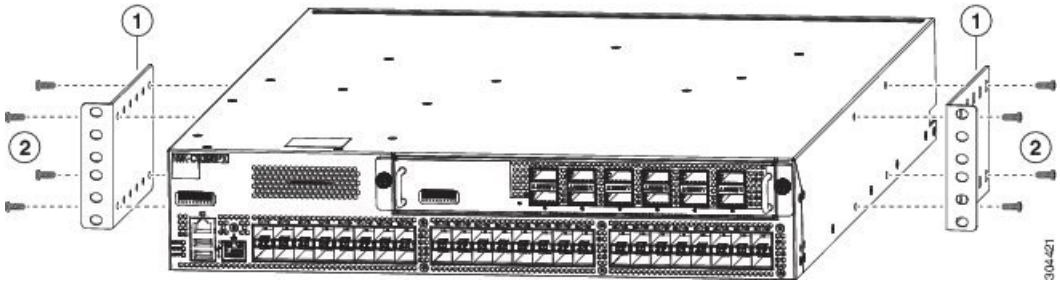

1	Center-mount bracket with its larger side facing the chassis and the longer side facing the front (port side) of the chassis. Align four screw holes in the bracket to four screw holes in the side of the chassis.	2	Four M4 x 8 mm screws used to fasten the bracket to the chassis.

Step 2 Use four M4 x 8 mm screws to attach the bracket to the chassis. Tighten each screw to 11 to 15 in-lb (1.2 to 1.7 N·m).

Step 3 Repeat Steps 1 and 2 to attach the second center-mount bracket to the other side of the chassis.

What to do next

You are ready to mount the chassis to the two-post rack.

Installing the Chassis in a Two-Post Rack

You need to position the chassis near the top of the rack with the power supply and fan modules in the appropriate aisle for their required airflow. If the fan modules have a blue coloring for port-side exhaust airflow, then you must position the modules by the cold aisle. If the fan modules have a burgundy coloring for port-side intake airflow, you must position the modules by the hot aisle.

Note Power supply modules must have the same airflow direction as the fan modules.

Note Power supply modules must have the same airflow direction as the fan modules but might have different coloring if they use DC power (green coloring for port-side intake airflow or gray coloring for port-side exhaust airflow).

Warning **Statement 1074—**Comply with Local and National Electrical Codes

To reduce risk of electric shock or fire, installation of the equipment must comply with local and national electrical codes.

Warning **Statement 1032—**Lifting the Chassis

To prevent personal injury or damage to the chassis, never attempt to lift or tilt the chassis using the handles on modules (such as power supplies, fans, or cards); these types of handles are not designed to support the weight of the unit.

Before you begin

- Make sure that the two-post rack is properly installed and secured to the concrete subfloor.
- Make sure that two center-mount brackets are securely fastened to the middle of each side of the chassis.
- Make sure that you have six customer-supplied rack-mount screws (typically M6 x 10 mm or the appropriate screw for the vertical mounting rails on the rack).
- You have at least two people to install the chassis.

Warning **Statement 1006—**Chassis Warning for Rack-Mounting and Servicing

To prevent bodily injury when mounting or servicing this unit in a rack, you must take special precautions to ensure that the system remains stable. The following guidelines are provided to ensure your safety:

- This unit should be mounted at the bottom of the rack if it is the only unit in the rack.
- When mounting this unit in a partially filled rack, load the rack from the bottom to the top with the heaviest component at the bottom of the rack.
- If the rack is provided with stabilizing devices, install the stabilizers before mounting or servicing the unit in the rack.

Step 1 Use one person to position the chassis so that it is near the top of the rack with the fan and power supply modules in the appropriate aisle and the center-mount bracket has its screw holes aligned to screw holes on the two-post rack.

If these modules have a blue or gray coloring for port-side exhaust airflow, then you must position the modules by the cold aisle. If the modules have a burgundy or green coloring for port-side intake airflow, you must position the modules by the hot aisle.

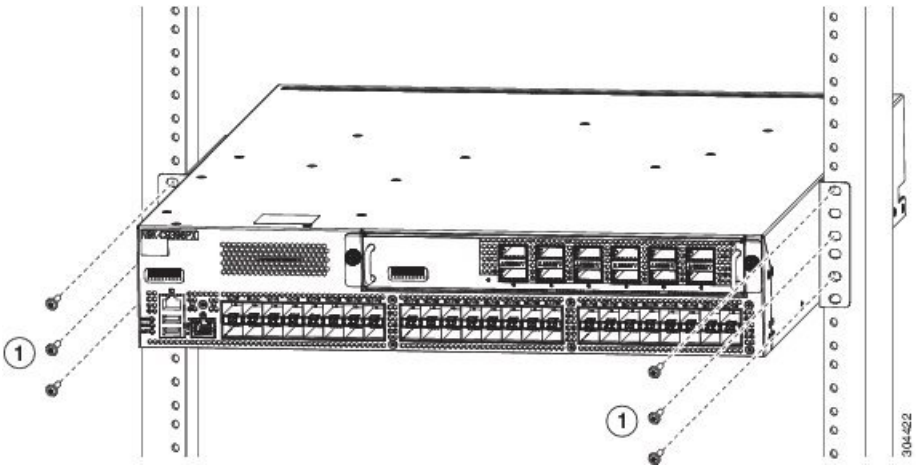

1	Three customer-supplied screws (typically M6 x 10 mm screws or the appropriate screws for the rack) to hold each side of the chassis to the two-post rack.		

Step 2 Use the second person to secure the three customer-supplied rack-mount screws (typically M6 x 10 mm or other appropriate screws for the rack) on each center-mount bracket to attach the chassis to the rack. Tighten each screw to the appropriate torque setting for the screws (for M6 x 10 mm screws, use 40 in-lbs [4.5 N·m] of torque).

Installing the Chassis in a Four-Post Rack

Before you install the chassis, be sure that the rack is fully secured to the data center floor.

Installing the Switch using the N9K-C9300-RMK Rack-mount Kit

Attaching the Bottom-Support Rails to the Rack

The switch chassis that you are installing ships with two adjustable bottom-support rails that you can attach to a four-post rack to hold the chassis. Each of these bottom-support rails has two pieces—one that slides into the other so that you can adjust them to fit racks with front and rear mounting posts that are spaced less than 36 inches (91 cm). On each bottom-support rail, the rail half that slides into the other rail includes a chassis stop that fits into the module end of the chassis. Depending on direction of the chassis airflow, you need to position the rail half with the chassis stop so that the fan and power supply modules end up in the appropriate aisle as follows:

- Port-side intake (burgundy coloring for fan modules) airflow requires that the bottom-support rail with the chassis stop be located on the hot aisle side of the rack.
- Port-side exhaust (blue coloring for fan modules) airflow requires that the bottom-support rail with the chassis stop be located on the cold aisle side of the rack.

Warning **Statement 1074**—Comply with Local and National Electrical Codes

To reduce risk of electric shock or fire, installation of the equipment must comply with local and national electrical codes.

Before you begin

Before you can install the bottom support rails for the chassis, you must do the following:

- Verify that a four-post rack or cabinet is installed.
- If any other devices are stored in the rack or cabinet, verify that the heavier switches are installed below lighter switches.
- Verify that the bottom-support rails kit is included in the switch accessory kit.
- Verify that you have 8 screws for attaching the bottom support brackets to the racks (typically M6 x 10 mm screws or the screw appropriate for the vertical mounting rails on the rack.

Warning **Statement 1006**—Chassis Warning for Rack-Mounting and Servicing

To prevent bodily injury when mounting or servicing this unit in a rack, you must take special precautions to ensure that the system remains stable. The following guidelines are provided to ensure your safety:

- This unit should be mounted at the bottom of the rack if it is the only unit in the rack.
- When mounting this unit in a partially filled rack, load the rack from the bottom to the top with the heaviest component at the bottom of the rack.
- If the rack is provided with stabilizing devices, install the stabilizers before mounting or servicing the unit in the rack.

Step 1 Look at the fan and power supply modules installed in the chassis to determine how you must position the bottom-support rails on the rack.

- If the fan modules have blue coloring (port-side exhaust modules), you must position the bottom support rails so that the chassis stop is positioned by the cold aisle.
- If the fan modules have burgundy (port-side intake modules), you must position the bottom support rails so that the chassis stop is positioned by the hot aisle.

Step 2 Separate the two sliders that make up one bottom-support rail and position the half with the chassis stop by the appropriate aisle for the fan and power supply modules. Also make sure that there is at least 1 rack unit open above the bottom-support rails so that you can easily install the chassis.

Step 3 Use two customer-supplied screws (typically M6 x 10 mm screws) to attach the bottom-support rail half to the vertical mounting rails on the rack post. Tighten each screw to the appropriate torque setting for the screws (for M6 x 10 mm screws, use 40 in. lbs [4.5 N·m] of torque).

Step 4 Slide the other half of the bottom-support rail onto the attached half of the rail set and use two customer supplied screws (typically M6 x 10 mm screws) to secure that portion to the vertical mounting rails on the rack. Tighten each screw to the appropriate torque setting for the screws (for M6 x 10 mm screws, use 40 in. lbs [4.5 N·m] of torque).

Figure 1: Positioning an Expanding Bottom-Support Rail Set

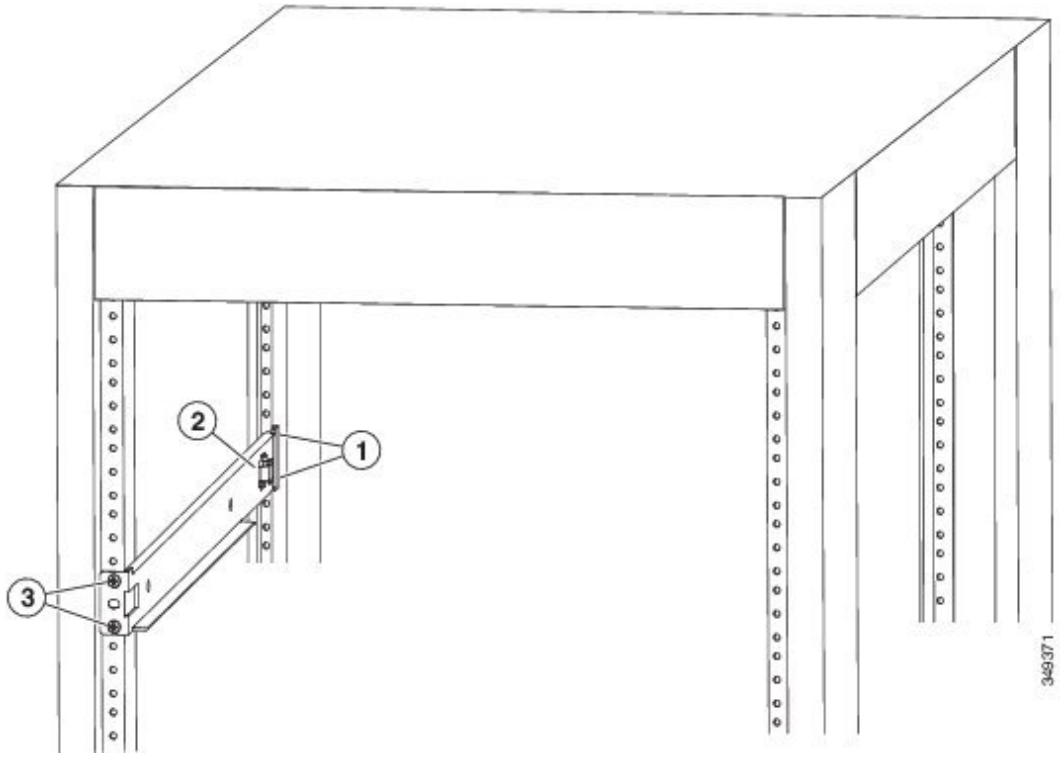

1	2 screws holding one end of the bottom-support bracket to the rear of the rack	3	2 screws holding the front end of the bottom-support bracket to the front side of the rack
2	Chassis stop on the expanding bottom-support bracket		

Step 5 Repeat Steps 2 and 3 to attach the other expanding bottom-support rails to the other side of the rack.

Note Check the two installed bottom support rails to be sure that both have their chassis stops by the same aisle (either both by the hot aisle or both by the cold aisle) and that both rails are level and level with each other. If they are not level, adjust the higher rail down to the level of the lower rail.

What to do next

You are ready to install two front-mount brackets on the chassis.

Attaching Front-Mount Brackets to the Chassis

You need to attach a right-angled bracket to each side of the chassis. This bracket holds the chassis in place on a four-post rack.

Before you begin

- You must have the following tools and equipment:
  - Manual Phillips-head torque screwdriver
  - Front-mount brackets (2) and screws (4) (found inside the switch accessory kit)

Step 1 Align the two holes in one side of one of two front-mount brackets to two holes on the left or right side of the chassis (see the following figure).

Be sure that the other side of the bracket is facing toward the front (port end) of the chassis.

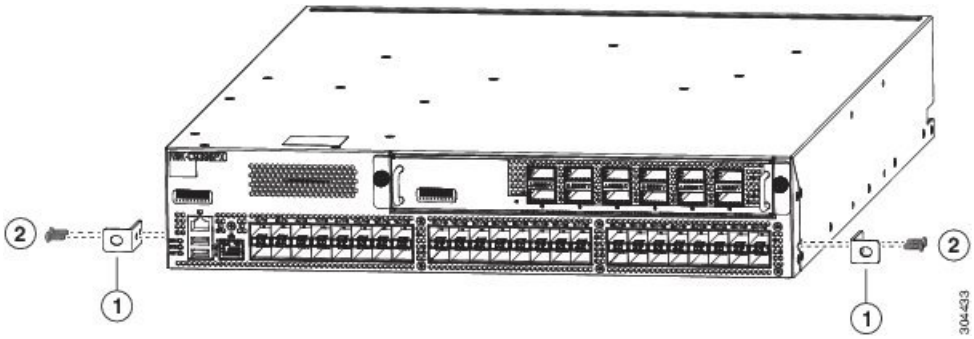

1	Front-mount bracket with two screw holes aligned to two screw holes in the chassis and one screw hole facing the front (port side) of the chassis.	2	Two M4 x 6 mm screws used to fasten the bracket to the chassis.

Step 2 Use two M4 x 6 mm screws to attach the bracket to the chassis. Tighten each screw to 11 to 15 in-lb (1.2 to 1.7 N·m).

Step 3 Repeat Steps 1 and 2 to attach the second center-mount bracket to the other side of the chassis.

What to do next

You are ready to mount the chassis to the four-post rack.

Installing the Chassis in a Four-Post Rack

You need to slide the chassis onto the bottom-support rails so that the power supply end locks onto the chassis stops at the end of the rails and so that the front-mount brackets on the chassis come into contact with the front-mount rails on the rack.

Warning **Statement 1074**—Comply with Local and National Electrical Codes

To reduce risk of electric shock or fire, installation of the equipment must comply with local and national electrical codes.

Warning **Statement 1032—**Lifting the Chassis

To prevent personal injury or damage to the chassis, never attempt to lift or tilt the chassis using the handles on modules (such as power supplies, fans, or cards); these types of handles are not designed to support the weight of the unit.

Before you begin

- Make sure that the four-post rack is properly installed and secured to the concrete subfloor.
- Make sure that the bottom-support rails are installed so that the fan modules will be in the appropriate aisle as follows:
  - Burgundy (port-side intake airflow) fan modules are positioned in a hot aisle (the chassis stop on the bottom-support rails is positioned by the hot aisle).
  - Blue colored (port-side exhaust airflow) fan modules are positioned in a cold aisle (the chassis stop on the bottom-support rails is positioned by the cold aisle).
- Make sure that two front-mount brackets are securely fastened to the sides of the chassis at the port end.
- Make sure that you have two customer-supplied rack-mount screws (M6 x 10 mm or appropriate screw for the vertical mounting rails on the rack).

Warning **Statement 1006—**Chassis Warning for Rack-Mounting and Servicing

To prevent bodily injury when mounting or servicing this unit in a rack, you must take special precautions to ensure that the system remains stable. The following guidelines are provided to ensure your safety:

- This unit should be mounted at the bottom of the rack if it is the only unit in the rack.
- When mounting this unit in a partially filled rack, load the rack from the bottom to the top with the heaviest component at the bottom of the rack.
- If the rack is provided with stabilizing devices, install the stabilizers before mounting or servicing the unit in the rack.

Step 1 Slide the power supply end of the chassis onto the bottom-support rails that are installed on the rack.

Be sure that the sides of the chassis by the power supplies clips into the chassis stops on the bottom-support rails and the front-mount brackets come in contact with the rack (see the following figure).

Note If the bottom-support rails are extended a long distance, they can bend outwards slightly when you install the chassis and the chassis stops at the far end of the rails might not fit into the end of the chassis. If this happens, press the side rails toward the sides of the chassis so that the chassis stops can go inside the chassis and hold it in place on the rack.

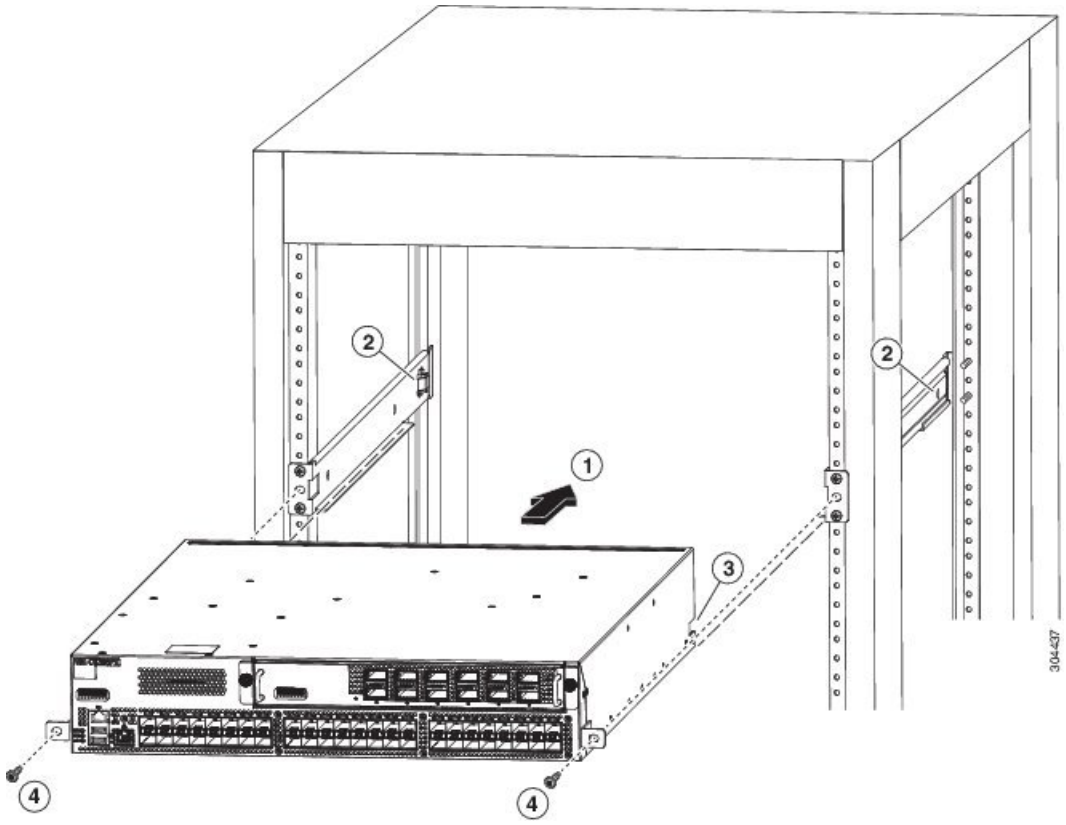

1	Slide the power-supply end of the chassis onto the bottom-support rails so that the chassis locks onto the chassis stops at the end of the rails.	3	Receiving hole on each side of the chassis for the chassis stops on the bottom-support rails.
2	Chassis stops for holding the chassis (positioned by the aisle required for the fan and power supply modules).	4	Customer-supplied rack-mount screw (M6 x 10 mm screw or other screw appropriate for the rack) used to secure each side of the chassis to the rack.

Step 2 Use a customer-supplied rack-mount screw (an M6 x 10 mm screw or other appropriate screw for the rack) to attach each of the two mounting brackets on the chassis to the rack and tighten each screw to the appropriate torque setting for the screw (for M6 x 10 mm screws, use 40 in-lbs [4.5 N·m] of torque).

Grounding the Chassis

The switch chassis is automatically grounded when you properly install the switch in a grounded rack with metal-to-metal connections between the switch and rack.

Note An electrical conducting path shall exist between the product chassis and the metal surface of the enclosure or rack in which it is mounted or to a grounding conductor. Electrical continuity shall be provided by using thread-forming type mounting screws that remove any paint or non-conductive coatings and establish a metal-to-metal contact. Any paint or other non-conductive coatings shall be removed on the surfaces between the mounting hardware and the enclosure or rack. The surfaces shall be cleaned and an antioxidant applied before installation.

You can also ground the chassis, which is required if the rack is not grounded, by attaching a customer-supplied grounding cable. Attach the cable to the chassis grounding pad and the facility ground.

Warning **Statement 1024—**Ground Conductor

This equipment must be grounded. To reduce the risk of electric shock, never defeat the ground conductor or operate the equipment in the absence of a suitably installed ground conductor. Contact the appropriate electrical inspection authority or an electrician if you are uncertain that suitable grounding is available.

Warning **Statement 1046—**Installing or Replacing the Unit

To reduce risk of electric shock, when installing or replacing the unit, the ground connection must always be made first and disconnected last.

Before you begin

Before you can ground the chassis, you must have a connection to the earth ground for the data center building.

Step 1 Use a wire-stripping tool to remove approximately 0.75 inch (19 mm) of the covering from the end of the grounding wire. We recommend 6-AWG wire for the U.S. installations.

Step 2 Insert the stripped end of the grounding wire into the open end of the grounding lug. Use a crimping tool to crimp the lug to the wire, see the following figure. Verify that the ground wire is securely attached to the grounding lug by attempting to pull the wire out of the crimped lug.

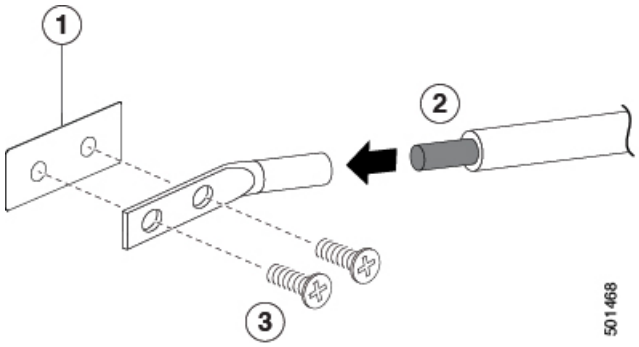

1	Chassis grounding pad	3	2 M4 screws are used to secure the grounding lug to the chassis

2	Grounding cable, with 0.75 in. (19 mm) of insulation that is stripped from one end, which is inserted into the grounding lug and crimped in place		

Step 3 Secure the grounding lug to the chassis grounding pad with two M4 screws, see the previous figure. Tighten the screws to 11 to 15 in-lb (1.24 to 1.69 N·m) of torque.

Step 4 Prepare the other end of the grounding wire and connect it to the facility ground.

Starting the Switch

You start the switch by connecting it to its dedicated power source. If you need *n*+1 redundancy, you must connect each of the power supplies to one or two power sources. If you need *n*+*n* redundancy, you must connect each power supply in a switch to a different power source.

Note This equipment is designed to boot up in less than 30 minutes, dependent on its neighboring devices being fully up and running.

Before you begin

- The switch must be installed and secured to a rack or cabinet.
- The switch must be adequately grounded.
- The rack must be close enough to the dedicated power source so that you can connect the switch to the power source by using a designated power cables.
- You have the designated power cables for the power supplies that you are connecting to the dedicated power sources.

Note Depending on the outlet receptacle on your AC power distribution unit, you might need an optional jumper power cord to connect the switch to your outlet receptacle.

- The switch is not connected to the network (this includes any management or interface connections).
- The fan and power supply modules are fully secured in their chassis slots.

Step 1 For each AC power supply, do the following:

a) Using the recommended AC power cable for your country or region, connect one end to the AC power supply.
b) Connect the other end of the power cable to the AC power source.

Step 2 For each HVAC/HVDC power supply, connect it to a power source as follows:

a) Using the recommended high voltage power cable for your country or region, connect the Anderson Power Saf-D-Grid connector on the power cable to the power receptacle on the power supply. Make sure that the connector clicks when fully pushed into the receptacle.
b) Connect the other end of the power cable to a power source.
   - When connecting to an HVAC power source, insert the C14 or LS-25 plug in a receptacle for the HVAC power source.
   - When connecting to an HVDC power source, do the following:
     1. Verify that the power is turned off at a circuit breaker for the power source terminals.
     2. Remove the nuts from each of the terminal posts for the power supply.
     3. Place the power cable negative-wire terminal ring on the negative terminal for the power source and secure them with a terminal nut.
     4. Place the power cable positive-wire terminal ring on the positive terminal for the power source and secure them with a terminal nut.
     5. Place the power cable ground-wire terminal ring on the ground terminal for the power source and secure them with a terminal nut.
     6. If there is a safety cover for the power source terminals, place and secure it over the terminals to avoid an electrical shock hazard.
     7. Turn on the power at the power source circuit breaker.

Step 3 For each DC power supply, do the following:
a) Turn off the circuit breaker for the power source to avoid an electrical shock hazard.
b) Verify that the power cable wires from the power source are connected to a connector block.
c) Insert the connector block into the receptacle on the power supply. Make sure that the connector block clicks when fully inserted in the receptacle and does not pull out.
d) If there is a safety cover for the terminals, place and secure it over the terminals to avoid an electrical shock hazard.
e) Turn on the power at the circuit breaker for the DC power source.

Step 4 Verify that the power supply LED is on and green.

Step 5 Listen for the fans; they should begin operating when the power supply is powered.

Step 6 After the switch boots, verify that the following LEDs are lit:
- On the fan modules, the Status (STA or STS) LED is green.

  If a fan module Status LED is not green, try reinstalling the fan module.
- After initialization, the switch chassis Status (labeled as STA or STS) LED is green.

Step 7 Verify that the system software has booted and the switch has initialized without error messages.

A setup utility automatically launches the first time that you access the switch and guides you through the basic configuration. For instructions on how to configure the switch and check module connectivity, see the appropriate Cisco Nexus 9000 Series configuration guide.