CHAPTER 11

Layer 2 Switching

This chapter describes how to identify and resolve problems that relate to Layer 2 switching.

This chapter includes the following sections:

- Information About Layer 2 Ethernet Switching, page 11-1
- Port Model, page 11-1
- Layer 2 Switching Problems, page 11-4
- Verifying Layer 2 Switching, page 11-7

Information About Layer 2 Ethernet Switching

Nexus1000V provides a distributed, layer 2 virtual switch that extends across many virtualized hosts.

It consists of two components:

- Virtual Supervisor Module (VSM), which is also known as the Control Plane (CP), acts as the Supervisor and contains the Cisco CLI, configuration, and high-level features.
- Virtual Ethernet Module (VEM), which is also known as the Data Plane (DP), acts as a line card and runs in each virtualized server to handle packet forwarding and other localized functions.

Port Model

This section describes the following port perspectives:

- Viewing Ports from the VEM, page 11-2
- Viewing Ports from the VSM, page 11-3.

Send document comments to nexus1k-docfeedback@cisco.com.

Viewing Ports from the VEM

The Nexus1000V differentiates between virtual and physical ports on each of the VEMs. Figure 11-1 shows how ports on the Nexus1000V switch are bound to physical and virtual VMware ports within a VEM.

Figure 11-1 VEM View of Ports

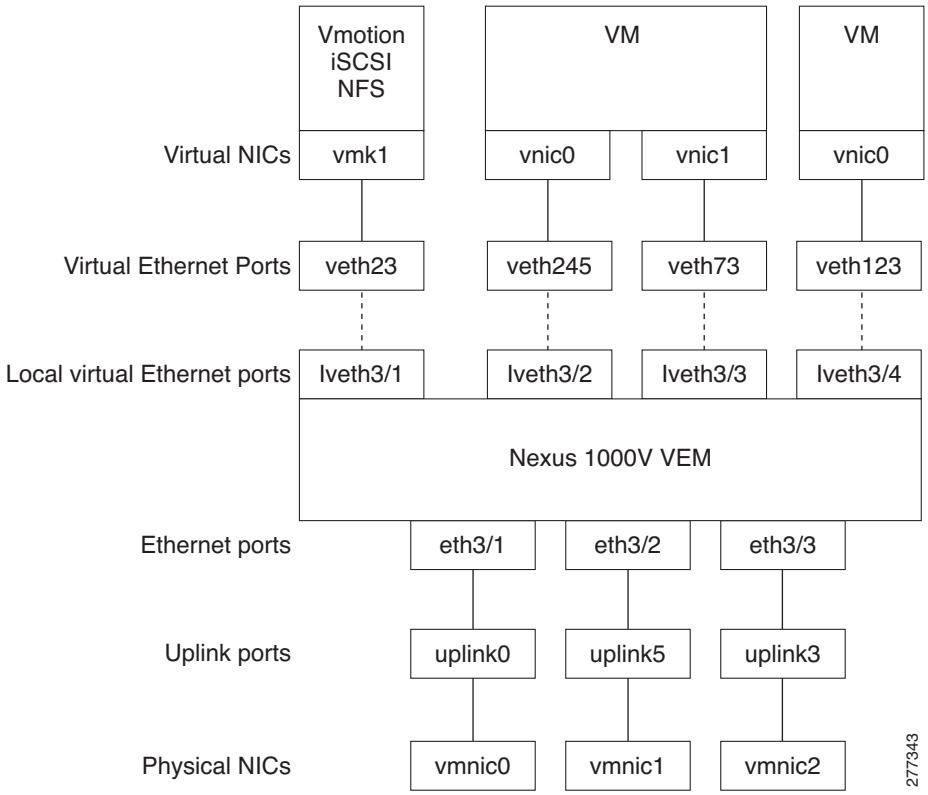

On the virtual side of the switch, there are three layers of ports that are mapped together:

- Virtual NICs: There are three types of Virtual NICs in VMware. The virtual NIC (vnic) is part of the VM, and represents the physical port of the host which is plugged into the switch. The virtual kernel NIC (vmknic) is used by the hypervisor for management, VMotion, iSCSI, NFS and other network access needed by the kernel. This interface would carry the IP address of the hypervisor itself, and is also bound to a virtual Ethernet port. The vswif (not shown) appears only in COS-based systems, and is used as the VMware management port. Each of these types maps to a veth port within Nexus1000V.
- Virtual Ethernet Ports (VEth): A VEth port is a port on the Cisco Nexus 1000V Distributed Virtual Switch. Cisco Nexus 1000V has a flat space of VEth ports 0..N. The virtual cable plugs into these VEth ports that are moved to the host running the VM.

  VEth ports are assigned to port groups.
- Local Virtual Ethernet Ports (lveth): Each host has a number of local VEth ports. These ports are dynamically selected for VEth ports that are needed on the host.

  These local ports do not move, and are addressable by the module-port number method.

Send document comments to nexus1k-docfeedback@cisco.com.

On the physical side of the switch, from bottom to top:

- Each physical NIC in VMware is represented by an interface called a vmnic. The vmnic number is allocated during VMware installation, or when a new physical NIC is installed, and remains the same for the life of the host.
- Each uplink port on the host represents a physical interface. It acts a lot like an lveth port, but because physical ports do not move between hosts, the mapping is 1:1 between an uplink port and a vmnic.
- Each physical port added to Nexus1000V switch appears as a physical Ethernet port, just as it would on a hardware-based switch.

  The uplink port concept is handled entirely by VMware, and is used to associate port configuration with vmnics. There is no fixed relationship between the uplink # and vmnic #, and these can be different on different hosts, and can change throughout the life of the host. On the VSM, the Ethernet interface number, such as ethernet 2/4, is derived from the vmnic number, not the uplink number.

Viewing Ports from the VSM

Figure 11-2 shows the VSM view ports.

Figure 11-2 VSM View of Ports

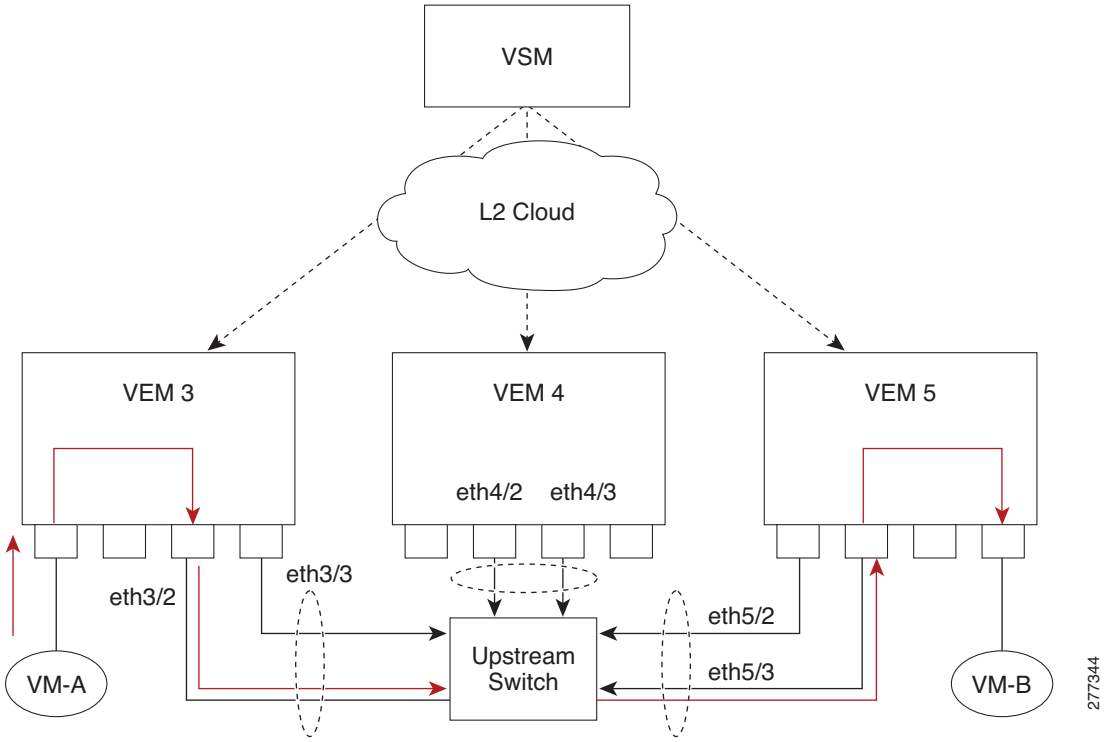

Send document comments to nexus1k-docfeedback@cisco.com.

Port Types

The following types of ports are available:

- Veths (Virtual Ethernet Interfaces) can be associated with any one of the following:
  - VNICs of a Virtual Machine on the ESX Host.
  - VMKNICs of the ESX Host
  - VSWIFs of an ESX COS Host.
- Eths (Physical Ethernet Interfaces) – correspond to the Physical NICs on the ESX Host.
- Po (Port Channel Interfaces) – The physical NICs of an ESX Host can be bundled into a logical interface. This logical bundle is referred to as a port channel interface.

For more information about Layer 2 switching, see the *Cisco Nexus 1000V Layer 2 Switching Configuration Guide, Release 4.2(1)SV1(4)*.

Layer 2 Switching Problems

This section describes how to troubleshoot Layer 2 problems and lists troubleshooting commands. This section includes the following topics:

- Verifying a Connection Between VEM Ports, page 11-4
- Verifying a Connection Between VEMs, page 11-5
- Isolating Traffic Interruptions, page 11-6
- Verifying Layer 2 Switching, page 11-7

Verifying a Connection Between VEM Ports

To verify a connection between two veth ports on a VEM, follow these steps:

Step 1 On the VSM, enter the **show vlan** command to view the state of the VLANs associated with the port. If the VLAN associated with a port is not active, then the port may be down. In this case, you must create the VLAN and activate it.

Step 2 To see the state of the port on the VSM, enter a **show interface brief** command.

Step 3 Enter the **module vem** *module-number* **execute vemcmd show port** command to display the ports that are present on the VEM, their local interface indices, VLAN, type (physical or virtual), CBL state, port mode, and port name.

The key things to look for in the output are:

- State of the port.
- CBL.
- Mode.
- Attached device name.
- The LTL of the port you are trying to troubleshoot. It will help you identify the interface quickly in other VEM commands where the interface name is not displayed.

Send document comments to nexus1k-docfeedback@cisco.com.

- Make sure the state of the port is up. If not, verify the configuration of the port on the VSM.

Step 4 To view the VLANs and their port lists on a particular VEM, use the **module vem** *module-number* **execute vemcmd show bd** command:

```
n1000V# module vem 5 execute vemcmd show bd
```

If you are trying to verify that a port belongs to a particular VLAN, make suer you see the port name or LTL in the port list of that VLAN.

Verifying a Connection Between VEMs

To verify a connection between veth ports on two separate VEMs, follow these steps:

Step 1 Issue the **show vlan** command to check if the VLAN associated with the port is created on the VSM.

Step 2 Issue the **show interface brief** command to check if the ports are up in the VSM.

Step 3 On the VEM, issue the **module vem 3 execute vemcmd show port** command to check if the CBL state of the two ports is set to the value of 1 for forwarding (active).

Step 4 On the VEM, issue the **module vem 3 execute vemcmd show bd** command to check if the two veth ports are listed in the flood list of the VLAN to which they are trying to communicate.

Step 5 Verify that the uplink switch to which the VEMs are connected is carrying the VLAN to which the ports belong.

Step 6 Find out the port on the upstream switch to which the pnic (that is supposed to be carrying the VLAN) on the VEM is connected to.

```
n1000v# show cdp neighbors
Capability Codes: R - Router, T - Trans-Bridge, B - Source-Route-Bridge
                  S - Switch, H - Host, I - IGMP, r - Repeater,
                  V - VoIP-Phone, D - Remotely-Managed-Device,
                  s - Supports-STP-Dispute


Device ID              Local Intrfce   Hldtme Capability  Platform      Port ID
swordfish-6k-2         Eth5/2        168    R S I       WS-C6506-E    Gig1/38
```

The PNIC (Eth 5/2) is connected to swordfish-6k-2 on port Gig1/38.

Step 7 Log in to the upstream switch and make sure the port is configured to allow the VLAN you are looking for.

```
n1000v#show running-config interface gigabitEthernet 1/38
Building configuration...

Current configuration : 161 bytes
!
interface GigabitEthernet1/38
 description Srvr-100:vmnic1
 switchport
 switchport trunk allowed vlan 1,60-69,231-233
 switchport mode trunk
end
```

Send document comments to nexus1k-docfeedback@cisco.com.

As this output shows, VLANs 1,60-69, 231-233 are allowed on the port. If a particular VLAN is not in the allowed VLAN list, make sure to add it to the allowed VLAN list of the port.

Isolating Traffic Interruptions

Use the following steps to isolate the cause for no traffic passing across VMs on different VEMs.

Step 1 In output of the **show port-profile name** command, verify the following information:

- The control and packet VLANs that you configured are present (in the example, these are 3002 and 3003)
- If the physical NIC in your configuration carries the VLAN for VM, then that VLAN is also present in the allowed VLAN list.

```
n1000v#show port-profile name alluplink
port-profile alluplink
  description:
  status: enabled
  system vlans: 3002,3003
  port-group: alluplink
  config attributes:
    switchport mode trunk
    switchport trunk allowed vlan 1,80,3002,610,620,630-650
    no shutdown
  evaluated config attributes:
    switchport mode trunk
    switchport trunk allowed vlan 1,80,3002,3003,610,620,630-650
    no shutdown
  assigned interfaces:
    Ethernet2/2
```

Step 2 Inside the VM, use the following command to verify that the Ethernet interface is up.

ifconfig –a

If not, consider deleting that NIC from the VM, and adding another NIC.

Step 3 Using any sniffer tool, verify that ARP requests and responses are received on the VM interface.

Step 4 On the upstream switch, use the following commands to look for the association between the IP and MAC address:

debug arp
show arp

```
Example:
n1000v_CAT6K# debug arp
ARP packet debugging is on
11w4d: RARP: Rcvd RARP req for 0050.56b7.3031
11w4d: RARP: Rcvd RARP req for 0050.56b7.3031
11w4d: RARP: Rcvd RARP req for 0050.56b7.4d35
11w4d: RARP: Rcvd RARP req for 0050.56b7.52f4
11w4d: IP ARP: rcvd req src 10.78.1.123 0050.564f.3586, dst 10.78.1.24 Vlan3002
11w4d: RARP: Rcvd RARP req for 0050.56b7.3031
n1000v_CAT6K#

Example:
n1000v_CAT6K# sh arp
```

Send document comments to nexus1k-docfeedback@cisco.com.

```
Protocol  Address          Age (min)  Hardware Addr   Type   Interface
Internet  10.78.1.72               -   001a.6464.2008  ARPA
Internet  7.114.1.100              -   0011.bcac.6c00  ARPA   Vlan140
Internet  41.0.0.1                 -   0011.bcac.6c00  ARPA   Vlan410
Internet  7.61.5.1                 -   0011.bcac.6c00  ARPA   Vlan1161
Internet  10.78.1.5                -   0011.bcac.6c00  ARPA   Vlan3002
Internet  7.70.1.1                 -   0011.bcac.6c00  ARPA   Vlan700
Internet  7.70.3.1                 -   0011.bcac.6c00  ARPA   Vlan703
Internet  7.70.4.1                 -   0011.bcac.6c00  ARPA   Vlan704
Internet  10.78.1.1                0   0011.bc7c.9c0a  ARPA   Vlan3002
Internet  10.78.1.15               0   0050.56b7.52f4  ARPA   Vlan3002
Internet  10.78.1.123            0   0050.564f.3586  ARPA   Vlan3002
```

Step 5 You have completed this procedure.

Verifying Layer 2 Switching

Use the following commands to display and verify the Layer 2 MAC address configuration.

Command	Purpose
show mac address-table	Displays the MAC address table to verify all MAC addresses on all VEMs controlled by the VSM. See Example 11-1 on page 11-8
show mac address-table module *module-number*	Displays all the MAC addresses on the specified VEM.
show mac address-table static *HHHH.WWWW.HHHH*	Displays the MAC address table static entries. See Example 11-2 on page 11-9
show mac address-table address *HHHH.WWWW.HHHH*	Displays the interface on which the MAC address specified is learned or configured. • For dynamic MACs, if the same MAC appears on multiple interfaces, then each of them is displayed separately. • For static MACs, if the same MAC appears on multiple interfaces, then only the entry on the configured interface is displayed.
show mac address-table static | inc veth	Displays the static MAC address of vEthernet interfaces in case a VEM physical port learns a dynamic MAC and the packet source is in another VEM on the same VSM. See Example 11-3 on page 11-9
show running-config vlan <vlan-id>	Displays VLAN information in the running configuration.
show vlan [**all-ports** | **brief** | **id** <*vlan-id*> | **name** <*name*> | **dot1q tag native**]	Displays VLAN information as specified. See Example 11-4 on page 11-9.
show vlan summary	Displays a summary of VLAN information.

Send document comments to nexus1k-docfeedback@cisco.com.

Command	Purpose
show interface brief	Displays a table of interface states. See Example 11-5 on page 11-10.
module vem *module-number* **execute vemcmd show port**	On the VEM, displays the port state on a particular VEM. This command can only be used from the VEM. See Example 11-6 on page 11-10.
module vem *module-number* **execute vemcmd show bd** command	For the specified VEM, displays its VLANs and their port lists. See Example 11-7 on page 11-11.
module vem *module-number* **execute vemcmd show trunk**	For the specified VEM, displays the VLAN state on a trunk port. • If a VLAN is forwarding (active) on a port, then its CBL state should be 1. • If a VLAN is blocked, then its CBL state is 0. See Example 11-8 on page 11-11.
module vem *module-number* **execute vemcmd show l2** *vlan-id*	For the specified VEM, displays the VLAN forwarding table for a specified VLAN. See Example 11-9 on page 11-11.
show interface *interface_id* **mac**	Displays the MAC addresses and the burn-in MAC address for an interface.

Example 11-1 show mac address-table

Note The Cisco Nexus 1000VMAC address table does not display multicast MAC addresses.

Tip Module indicates the VEM on which this MAC is seen.

N1KV Internal Port refers to an internal port created on the VEM. This port is used for control and management of the VEM and is not used for forwarding packets.

```
n1000v# show mac address-table
VLAN      MAC Address       Type    Age       Port                          Module
---------+-----------------+-------+---------+-----------------------------+---------
1         0002.3d11.5502    static  0         N1KV Internal Port            3
1         0002.3d21.5500    static  0         N1KV Internal Port            3
1         0002.3d21.5502    static  0         N1KV Internal Port            3
1         0002.3d31.5502    static  0         N1KV Internal Port            3
1         0002.3d41.5502    static  0         N1KV Internal Port            3
1         0002.3d61.5500    static  0         N1KV Internal Port            3
1         0002.3d61.5502    static  0         N1KV Internal Port            3
1         0002.3d81.5502    static  0         N1KV Internal Port            3
3         12ab.47dd.ff89    static  0         Eth3/3                        3
342       0002.3d41.5502    static  0         N1KV Internal Port            3
342       0050.568d.5a3f    dynamic 0         Eth3/3                        3
343       0002.3d21.5502    static  0         N1KV Internal Port            3
```

Send document comments to nexus1k-docfeedback@cisco.com.

```
343       0050.568d.2aa0    dynamic 9         Eth3/3                          3
Total MAC Addresses: 13
n1000v#
```

Example 11-2 show mac address-table address

Tip This command shows all interfaces on which a MAC is learned dynamically. In this example, the same MAC appears on Eth3/3 and Eth4/3.

```
n1000v# show mac address-table address 0050.568d.5a3f
VLAN      MAC Address       Type    Age       Port                            Module
---------+-----------------+-------+---------+-------------------------------+---------
342       0050.568d.5a3f    dynamic 0         Eth3/3                          3
342       0050.568d.5a3f    dynamic 0         Eth4/3                          4
Total MAC Addresses: 1
n1000v#
```

Example 11-3 show mac address-table static | inc veth

```
n1000v# show mac address-table static | inc veth
460       0050.5678.ed16    static  0         Veth2                           3
460       0050.567b.1864    static  0         Veth1                           4
n1000v#
```

Example 11-4 show vlan

Tip This command shows the state of each VLAN created on the VSM.

```
n1000v# show vlan

VLAN Name                             Status    Ports
---- -------------------------------- --------- -------------------------------
1    default                          active    Eth3/3, Eth3/4, Eth4/2, Eth4/3
110  VLAN0110                         active
111  VLAN0111                         active
112  VLAN0112                         active
113  VLAN0113                         active
114  VLAN0114                         active
115  VLAN0115                         active
116  VLAN0116                         active
117  VLAN0117                         active
118  VLAN0118                         active
119  VLAN0119                         active
800  VLAN0800                         active
801  VLAN0801                         active
802  VLAN0802                         active
803  VLAN0803                         active
804  VLAN0804                         active
805  VLAN0805                         active
806  VLAN0806                         active
807  VLAN0807                         active
808  VLAN0808                         active
809  VLAN0809                         active
810  VLAN0810                         active
811  VLAN0811                         active
812  VLAN0812                         active
```

Send document comments to nexus1k-docfeedback@cisco.com.

```
813  VLAN0813                          active
814  VLAN0814                          active
815  VLAN0815                          active
816  VLAN0816                          active
817  VLAN0817                          active
818  VLAN0818                          active
819  VLAN0819                          active
820  VLAN0820                          active
VLAN Name                              Status    Ports
---- -------------------------------- --------- -------------------------------
---- -------------------------------- --------- -------------------------------

Remote SPAN VLANs
-------------------------------------------------------------------------------

Primary  Secondary  Type             Ports
-------  ---------  ---------------  ------------------------------------------
```

Example 11-5 show interface brief

```
n1000v# show int brief

--------------------------------------------------------------------------------
Port      VRF          Status IP Address                     Speed    MTU
--------------------------------------------------------------------------------
mgmt0     --            up     172.23.232.143                 1000     1500

--------------------------------------------------------------------------------
Ethernet      VLAN   Type Mode   Status  Reason                   Speed     Port
Interface                                                                    Ch #
--------------------------------------------------------------------------------
Eth3/4        1      eth  trunk  up      none                       1000(D) --
Eth4/2        1      eth  trunk  up      none                       1000(D) --
Eth4/3        1      eth  trunk  up      none                       1000(D) --
```

Example 11-6 module vem module-number execute vemcmd show port

Tip Look for the state of the port.

```
~ # module vem 3 execute vemcmd show port
  LTL    IfIndex   Vlan    Bndl  SG_ID Pinned_SGID  Type  Admin State  CBL Mode   Name
    8          0   3969       0      2           2  VIRT     UP    UP    1 Access 120
    9          0   3969       0      2           2  VIRT     UP    UP    1 Access 121
   10          0    115       0      2           0  VIRT     UP    UP    1 Access 122
   11          0   3968       0      2           2  VIRT     UP    UP    1 Access 123
   12          0    116       0      2           0  VIRT     UP    UP    1 Access 124
   13          0      1       0      2           2  VIRT     UP    UP    0 Access 125
   14          0   3967       0      2           2  VIRT     UP    UP    1 Access 126
   16   1a030100      1 T     0      0           2  PHYS     UP    UP    1 Trunk
vmnic1
   17   1a030200      1 T     0      2           2  PHYS     UP    UP    1 Trunk
vmnic2
```

Send document comments to nexus1k-docfeedback@cisco.com.

Example 11-7 module vem** module-number **execute vemcmd show bd

Tip If a port belongs to a particular VLAN, the port name or LTL should be in the port list for the VLAN.

```
~ # module vem 5 execute vemcmd show bd
Number of valid BDS: 8
BD 1, vdc 1, vlan 1, 2 ports
Portlist:
16 vmnic1
17 vmnic2
BD 100, vdc 1, vlan 100, 0 ports
Portlist:
BD 110, vdc 1, vlan 110, 1 ports
Portlist:
16 vmnic1
BD 111, vdc 1, vlan 111, 1 ports
Portlist:
16 vmnic1
BD 112, vdc 1, vlan 112, 1 ports
Portlist:
16 vmnic1
BD 113, vdc 1, vlan 113, 1 ports
Portlist:
16 vmnic1
BD 114, vdc 1, vlan 114, 1 ports
Portlist:
16 vmnic1
BD 115, vdc 1, vlan 115, 2 ports
Portlist:
10 l22
16 vmnic1
```

Example 11-8 module vem** module-number **execute vemcmd show trunk

Tip If a VLAN is active on a port, then its CBL state should be 1.
If a VLAN is blocked, then its CBL state is 0.

```
~ # module vem 5 execute vemcmd show trunk
Trunk port 16 native_vlan 1 CBL 1
vlan(1) cbl 1, vlan(110) cbl 1, vlan(111) cbl 1, vlan(112) cbl 1, vlan(113) cbl 1,
vlan(114) cbl 1,vlan(115) cbl 1, vlan(116) cbl 1, vlan(117) cbl 1, vlan(118) cbl 1,
vlan(119) cbl 1,
Trunk port 17 native_vlan 1 CBL 0
vlan(1) cbl 1, vlan(117) cbl 1,
~ #
```

Example 11-9 module vem** module-number **execute vemcmd show l2

```
Bridge domain 115 brtmax 1024, brtcnt 2, timeout 300
Dynamic MAC 00:50:56:bb:49:d9 LTL 16 timeout 0
Dynamic MAC 00:02:3d:42:e3:03 LTL 10 timeout 0
```

Send document comments to nexus1k-docfeedback@cisco.com.