Configuring Interfaces

This chapter describes how to configure interfaces on the sensor. You configured the interfaces when you initialized the sensor with the **setup** command, but if you need to change or add anything to your interface configuration, use the following procedures. For more information on configuring interfaces using the **setup** command, see Chapter 3, "Initializing the Sensor."

This chapter contains the following sections:

Interface Notes and Caveats

The following notes and caveats apply to configuring interfaces on the sensor:

- On appliances, all sensing interfaces are disabled by default. You must enable them to use them. On modules, the sensing interfaces are permanently enabled.
- In IPS 7.1, rx/tx flow control is disabled on the IPS 4200 series sensors. This is a change from IPS 7.0 where rx/tx flow control is enabled by default.
- There is only one sensing interface on the ASA IPS modules (ASA 5500 AIP SSM, ASA 5500-X IPS SSP, and ASA 5585-X IPS SSP), so you cannot designate an alternate TCP reset interface.
- You can only assign a sensing interface as an alternate TCP reset interface. You cannot configure the management interface as an alternate TCP reset interface.

- You configure the ASA IPS modules (ASA 5500 AIP SSM, ASA 5500-X IPS SSP ASA 5585-X IPS SSP) for promiscuous mode from the adaptive security appliance CLI and not from the Cisco IPS CLI.
- You can configure the ASA IPS modules (ASA 5500 AIP SSM, ASA 5500-X IPS SSP, and ASA 5585-X IPS SSP) to operate inline even though they have only one sensing interface.
- The ASA IPS modules (ASA 5500 AIP SSM, ASA 5500-X IPS SSP, and ASA 5585-X IPS SSP) do not support inline VLAN pairs.
- The ASA IPS modules (ASA 5500 AIP SSM, ASA 5500-X IPS SSP, and ASA 5585-X IPS SSP) do not support VLAN groups mode.
- There are security consequences when you put the sensor in bypass mode. When bypass mode is on, the traffic bypasses the sensor and is not inspected; therefore, the sensor cannot prevent malicious attacks.
- As with signature updates, when the sensor applies a global correlation update, it may trigger bypass. Whether or not bypass is triggered depends on the traffic load of the sensor and the size of the signature/global correlation update. If bypass mode is turned off, an inline sensor stops passing traffic while the update is being applied.
- The ASA 5500-X IPS SSP and ASA 5585-X IPS SSP do not support bypass mode. The adaptive security appliance will either fail open, fail close, or fail over depending on the configuration of the adaptive security appliance and the type of activity being done on the IPS.
- The **show interface** command output for the IPS 4510 and IPS 4520 does not include the total undersize packets or total transmit FIFO overruns.
- When the IPS 4510 and IPS 4520 are configured in VLAN pairs, the **packet display** command does not work without the VLAN option if the **expression** keyword is also used.
- For the IPS 4510 and IPS 4520, the maximum number of inline VLAN pairs you can create system wide is 150. On all other platforms, the limit is 255 per interface.
- On the IPS 4510 and IPS 4520, no interface-related configurations are allowed when the SensorApp is down.
- For IPS standalone appliances with 1 G and 10 G fixed or add-on interfaces, the maximum jumbo frame size is 9216 bytes. For integrated IPS sensors, such as the ASA 5500-X and ASA 5585-X series, refer to the following URL for information:

  http://www.cisco.com/en/US/docs/security/asa/asa84/configuration/guide/interface_start.html#wp1328869

Note A jumbo frame is an Ethernet packet that is larger than the standard maximum of 1518 bytes (including Layer 2 header and FCS).

Understanding Interfaces

This section describes the IPS interfaces and modes, and contains the following topics:

IPS Interfaces

The sensor interfaces are named according to the maximum speed and physical location of the interface. The physical location consists of a port number and a slot number. All interfaces that are built-in on the sensor motherboard are in slot 0, and the interface card expansion slots are numbered beginning with slot 1 for the bottom slot with the slot numbers increasing from bottom to top (except for the IPS 4270-20, where the ports are numbered from top to bottom). Each physical interface can be divided in to VLAN group subinterfaces, each of which consists of a group of VLANs on that interface.

There are three interface roles:

- Command and control
- Sensing
- Alternate TCP reset

There are restrictions on which roles you can assign to specific interfaces and some interfaces have multiple roles. You can configure any sensing interface to any other sensing interface as its TCP reset interface. The TCP reset interface can also serve as an IDS (promiscuous) sensing interface at the same time. The following restriction applies: The TCP reset interface that is assigned to a sensing interface has no effect in inline interface or inline VLAN pair mode, because TCP resets are always sent on the sensing interfaces in those modes.

Note There is only one sensing interface on the ASA IPS modules (ASA 5500 AIP SSM, ASA 5500-X IPS SSP, and ASA 5585-X IPS SSP), so you cannot designate an alternate TCP reset interface.

Caution On the IPS 4510 and IPS 4520, no interface-related configurations are allowed when the SensorApp is down.

Command and Control Interface

The command and control interface has an IP address and is used for configuring the sensor. It receives security and status events from the sensor and queries the sensor for statistics. The command and control interface is permanently enabled. It is permanently mapped to a specific physical interface, which depends on the specific model of sensor. You cannot use the command and control interface as either a sensing or alternate TCP reset interface.

Table 5-1 lists the command and control interfaces for each sensor.

Table 5-1 Command and Control Interfaces

Sensor	Command and Control Interface
ASA 5500 AIP SSM-10	GigabitEthernet 0/0
ASA 5500 AIP SSM-20	GigabitEthernet 0/0
ASA 5500 AIP SSM-40	GigabitEthernet 0/0
ASA 5512-X IPS SSP	Management 0/0
ASA 5515-X IPS SSP	Management 0/0
ASA 5525-X IPS SSP	Management 0/0
ASA 5545-X IPS SSP	Management 0/0
ASA 5555-X IPS SSP	Management 0/0
ASA 5585-X IPS SSP-10	Management 0/0
ASA 5585-X IPS SSP-20	Management 0/0
ASA 5585-X IPS SSP-40	Management 0/0
ASA 5585-X IPS SSP-60	Management 0/0
IPS 4240	Management 0/0
IPS 4255	Management 0/0
IPS 4260	Management 0/0
IPS 4270-20	Management 0/0
IPS 4345	Management 0/0
IPS 4360	Management 0/0
IPS 4510	Management 0/0
IPS 4520	Management 0/0

Sensing Interfaces

Sensing interfaces are used by the sensor to analyze traffic for security violations. A sensor has one or more sensing interfaces depending on the sensor. Sensing interfaces can operate individually in promiscuous mode or you can pair them to create inline interfaces.

Note On appliances, all sensing interfaces are disabled by default. You must enable them to use them. On modules, the sensing interfaces are permanently enabled.

Some appliances support optional interface cards that add sensing interfaces to the sensor. You must insert or remove these optional cards while the sensor is powered off. The sensor detects the addition or removal of a supported interface card. If you remove an optional interface card, some of the interface configuration is deleted, such as the speed, duplex, description string, enabled/disabled state of the interface, and any inline interface pairings. These settings are restored to their default settings when the card is reinstalled. However, the assignment of promiscuous and inline interfaces to the Analysis Engine is not deleted from the Analysis Engine configuration, but is ignored until those cards are reinserted and you create the inline interface pairs again.

For More Information

- For more information on supported interfaces, see Interface Support, page 5-7.
- For more information on interface modes, see Configuring Promiscuous Mode, page 5-20, Configuring Inline Interface Pairs, page 5-21, Understanding Inline VLAN Pair Mode, page 5-25, Understanding VLAN Group Mode, page 5-31, Configuring Inline Bypass Mode, page 5-38.

TCP Reset Interfaces

This section explains the TCP reset interfaces and when to use them. It contains the following topics:

Understanding Alternate TCP Reset Interfaces

You can configure sensors to send TCP reset packets to try to reset a network connection between an attacker host and its intended target host. In some installations when the interface is operating in promiscuous mode, the sensor may not be able to send the TCP reset packets over the same sensing interface on which the attack was detected. In such cases, you can associate the sensing interface with an alternate TCP reset interface and any TCP resets that would otherwise be sent on the sensing interface when it is operating in promiscuous mode are instead sent out on the associated alternate TCP reset interface.

If a sensing interface is associated with an alternate TCP reset interface, that association applies when the sensor is configured for promiscuous mode but is ignored when the sensing interface is configured for inline mode. any sensing interface can serve as the alternate TCP reset interface for another sensing interface.

Note There is only one sensing interface on the ASA IPS modules (ASA 5500 AIP SSM, ASA 5500-X IPS SSP, and ASA 5585-X IPS SSP), so you cannot designate an alternate TCP reset interface.

Table 5-2 lists the alternate TCP reset interfaces.

Table 5-2 Alternate TCP Reset Interfaces

Sensor	Alternate TCP Reset Interface
ASA 5500 AIP SSM-10	None
ASA 5500 AIP SSM-20	None
ASA 5500 AIP SSM-40	None
ASA 5512-X IPS SSP	None
ASA 5515-X IPS SSP	None
ASA 5525-X IPS SSP	None
ASA 5545-X IPS SSP	None
ASA 5555-X IPS SSP	None
ASA 5585-X IPS SSP-10	None

Table 5-2 Alternate TCP Reset Interfaces (continued)

Sensor	Alternate TCP Reset Interface
ASA 5585-X IPS SSP-20	None
ASA 5585-X IPS SSP-40	None
ASA 5585-X IPS SSP-60	None
IPS 4240	Any sensing interface
IPS 4255	Any sensing interface
IPS 4260	Any sensing interface
IPS 4270-20	Any sensing interface
IPS 4345	Any sensing interface
IPS 4360	Any sensing interface
IPS 4510	Any sensing interface
IPS 4520	Any sensing interface

For More Information

For more information on choosing the alternate TCP interface, see Designating the Alternate TCP Reset Interface, page 5-6.

Designating the Alternate TCP Reset Interface

Note There is only one sensing interface on the ASA IPS modules (ASA 5500 AIP SSM, ASA 5500-X IPS SSP, and ASA 5585-X IPS SSP), so you cannot designate an alternate TCP reset interface.

You need to designate an alternate TCP reset interface in the following situations:

- When a switch is being monitored with either SPAN or VACL capture and the switch does not accept incoming packets on the SPAN or VACL capture port.
- When a switch is being monitored with either SPAN or VACL capture for multiple VLANs, and the switch does not accept incoming packets with 802.1q headers. The TCP resets need 802.1q headers to tell which VLAN the resets should be sent on.
- When a network tap is used for monitoring a connection. Taps do not permit incoming traffic from the sensor.

Caution You can only assign a sensing interface as an alternate TCP reset interface. You cannot configure the management interface as an alternate TCP reset interface.

Interface Support

Table 5-3 describes the interface support for appliances and modules running Cisco IPS.

Table 5-3 Interface Support

Base Chassis	Added Interface Cards	Interfaces Supporting Inline VLAN Pairs (Sensing Ports)	Combinations Supporting Inline Interface Pairs	Interfaces Not Supporting Inline (Command and Control Port)
ASA 5500 AIP SSM-10	—	GigabitEthernet 0/1 by security context instead of VLAN pair or inline interface pair	GigabitEthernet 0/1 by security context instead of VLAN pair or inline interface pair	GigabitEthernet 0/0
ASA 5500 AIP SSM-20	—	GigabitEthernet 0/1 by security context instead of VLAN pair or inline interface pair	GigabitEthernet 0/1 by security context instead of VLAN pair or inline interface pair	GigabitEthernet 0/0
ASA 5500 AIP SSM-40	—	GigabitEthernet 0/1 by security context instead of VLAN pair or inline interface pair	GigabitEthernet 0/1 by security context instead of VLAN pair or inline interface pair	GigabitEthernet 0/0
ASA 5512-X IPS SSP	—	PortChannel 0/0 by security context instead of VLAN pair or inline interface pair	PortChannel 0/0 by security context instead of VLAN pair or inline interface pair	Management 0/0
ASA 5515-X IPS SSP	—	PortChannel 0/0 by security context instead of VLAN pair or inline interface pair	PortChannel 0/0 by security context instead of VLAN pair or inline interface pair	Management 0/0
ASA 5525-X IPS SSP	—	PortChannel 0/0 by security context instead of VLAN pair or inline interface pair	PortChannel 0/0 by security context instead of VLAN pair or inline interface pair	Management 0/0
ASA 5545-X IPS SSP	—	PortChannel 0/0 by security context instead of VLAN pair or inline interface pair	PortChannel 0/0 by security context instead of VLAN pair or inline interface pair	Management 0/0
ASA 5555-X IPS SSP	—	PortChannel 0/0 by security context instead of VLAN pair or inline interface pair	PortChannel 0/0 by security context instead of VLAN pair or inline interface pair	Management 0/0
ASA 5585-X IPS SSP-10	—	PortChannel 0/0 by security context instead of VLAN pair or inline interface pair	PortChannel 0/0 by security context instead of VLAN pair or inline interface pair	Management 0/0
ASA 5585-X IPS SSP-20	—	PortChannel 0/0 by security context instead of VLAN pair or inline interface pair	PortChannel 0/0 by security context instead of VLAN pair or inline interface pair	Management 0/0
ASA 5585-X IPS SSP-40	—	PortChannel 0/0 by security context instead of VLAN pair or inline interface pair	PortChannel 0/0 by security context instead of VLAN pair or inline interface pair	Management 0/0

Table 5-3 Interface Support (continued)

Base Chassis	Added Interface Cards	Interfaces Supporting Inline VLAN Pairs (Sensing Ports)	Combinations Supporting Inline Interface Pairs	Interfaces Not Supporting Inline (Command and Control Port)
ASA 5585-X IPS SSP-60	—	PortChannel 0/0 by security context instead of VLAN pair or inline interface pair	PortChannel 0/0 by security context instead of VLAN pair or inline interface pair	Management 0/0
IPS 4240	—	GigabitEthernet 0/0 GigabitEthernet 0/1 GigabitEthernet 0/2 GigabitEthernet 0/3	0/0<->0/1 0/0<->0/2 0/0<->0/3 0/1<->0/2 0/1<->0/3 0/2<->0/3	Management 0/0
IPS 4255	—	GigabitEthernet 0/0 GigabitEthernet 0/1 GigabitEthernet 0/2 GigabitEthernet 0/3	0/0<->0/1 0/0<->0/2 0/0<->0/3 0/1<->0/2 0/1<->0/3 0/2<->0/3	Management 0/0
IPS 4260	—	GigabitEthernet 0/1	N/A	Management 0/0
IPS 4260	4GE-BP Slot 1 Slot 2	GigabitEthernet 0/1 GigabitEthernet 2/0 GigabitEthernet 2/1 GigabitEthernet 2/2 GigabitEthernet 2/3 GigabitEthernet 3/0 GigabitEthernet 3/1 GigabitEthernet 3/2 GigabitEthernet 3/3	 2/0<->2/1[1] 2/2<->2/3 3/0<->3/1 3/2<->3/3	Management 0/0
IPS 4260	2SX Slot 1 Slot 2	GigabitEthernet 0/1 GigabitEthernet 2/0 GigabitEthernet 2/1 GigabitEthernet 3/0 GigabitEthernet 3/1	All sensing ports can be paired together	Management 0/0
IPS 4260	10GE Slot 1	GigabitEthernet 0/1 TenGigabitEthernet 2/0 TenGigabitEthernet 2/1	 2/0<->2/1[2]	Management 0/0
IPS 4270-20	—	—	N/A	Management 0/0 Management 0/1[3]

Table 5-3 Interface Support (continued)

Base Chassis	Added Interface Cards	Interfaces Supporting Inline VLAN Pairs (Sensing Ports)	Combinations Supporting Inline Interface Pairs	Interfaces Not Supporting Inline (Command and Control Port)
IPS 4270-20	4GE-BP Slot 1 Slot 2	 GigabitEthernet 3/0 GigabitEthernet 3/1 GigabitEthernet 3/2 GigabitEthernet 3/3 GigabitEthernet 4/0 GigabitEthernet 4/1 GigabitEthernet 4/2 GigabitEthernet 4/3	 3/0<->3/1[4] 3/2<->3/3 4/0<->4/1 4/2<->4/3	Management 0/0 Management 0/1[4]
IPS 4270-20	2SX Slot 1 Slot 2	 GigabitEthernet 3/0 GigabitEthernet 3/1 GigabitEthernet 4/0 GigabitEthernet 4/1	All sensing ports can be paired together	Management 0/0 Management 0/1[4]
IPS 4270-20	10GE Slot 1 Slot 2	 TenGigabitEthernet 5/0 TenGigabitEthernet 5/1 TenGigabitEthernet 7/0 TenGigabitEthernet 7/1	All sensing ports can be paired together	Management 0/0 Management 0/1[4]
IPS 4345	—	GigabitEthernet 0/0 GigabitEthernet 0/1 GigabitEthernet 0/2 GigabitEthernet 0/3 GigabitEthernet 0/4 GigabitEthernet 0/5 Gigabitethernet 0/6 GigabitEthernet 0/7	All sensing ports can be paired together	Management 0/0 Management 0/1[5]

Table 5-3 Interface Support (continued)

Base Chassis	Added Interface Cards	Interfaces Supporting Inline VLAN Pairs (Sensing Ports)	Combinations Supporting Inline Interface Pairs	Interfaces Not Supporting Inline (Command and Control Port)
IPS 4360	—	GigabitEthernet 0/0 GigabitEthernet 0/1 GigabitEthernet 0/2 GigabitEthernet 0/3 GigabitEthernet 0/4 GigabitEthernet 0/5 GigabitEthernet 0/6 GigabitEthernet 0/7	All sensing ports can be paired together	Management 0/0 Management 0/1[5]
IPS 4510	—	GigabitEthernet 0/0 GigabitEthernet 0/1 GigabitEthernet 0/2 GigabitEthernet 0/3 GigabitEthernet 0/4 GigabitEthernet 0/5 TenGigabitEthernet 0/6 TenGigabitEthernet 0/7 TenGigabitEthernet 0/8 TenGigabitEthernet 0/9	All sensing ports can be paired together	Management 0/0 Management 0/1
IPS 4520	—TX	GigabitEthernet 0/0 GigabitEthernet 0/1 GigabitEthernet 0/2 GigabitEthernet 0/3 GigabitEthernet 0/4 GigabitEthernet 0/5 TenGigabitEthernet 0/6 TenGigabitEthernet 0/7 TenGigabitEthernet 0/8 TenGigabitEthernet 0/9	All sensing ports can be paired together	Management 0/0 Management 0/1

1. To disable hardware bypass, pair the interfaces in any other combination (2/0<->2/2 and 2/1<->2/3, for example).
2. To disable hardware bypass, pair the interfaces in any other combination (2/0<->2/2 and 2/1<->2/3, for example).
3. Reserved for future use.
4. To disable hardware bypass, pair the interfaces in any other combination (2/0<->2/2 and 2/1<->2/3, for example).
5. Does not currently support hardware bypass.

Note The IPS 4260 supports a mixture of 4GE-BP, 2SX, and 10GE cards. The IPS 4270-20 supports a mixture of 4GE-BP, 2SX, and 10GE cards up to a total of either six cards, or sixteen total ports, which ever is reached first, but is limited to only two 10GE card in the mix of cards.

Hardware Bypass Mode

In addition to Cisco IPS software bypass, the IPS 4260 and the IPS 4270-20 also support hardware bypass. This section describes the hardware bypass card and its configuration restrictions, and contains the following topics:

- Hardware Bypass Card, page 5-11
- Hardware Bypass Configuration Restrictions, page 5-12

Hardware Bypass Card

The IPS 4260 and the IPS 4270-20 support the 4-port GigabitEthernet card (part number IPS-4GE-BP-INT=) with hardware bypass. This 4GE bypass interface card supports hardware bypass only between ports 0 and 1 and between ports 2 and 3.

Note To disable hardware bypass, pair the interfaces in any other combination, for example 2/0<->2/2 and 2/1<->2/3.

Hardware bypass complements the existing software bypass feature in Cisco IPS. The following conditions apply to hardware bypass and software bypass:

- When bypass is set to OFF, software bypass is not active.

  For each inline interface for which hardware bypass is available, the component interfaces are set to disable the fail-open capability. If SensorApp fails, the sensor is powered off, reset, or if the NIC interface drivers fail or are unloaded, the paired interfaces enter the fail-closed state (no traffic flows through inline interface or inline VLAN subinterfaces).

- When bypass is set to ON, software bypass is active.

  Software bypass forwards packets between the paired physical interfaces in each inline interface and between the paired VLANs in each inline VLAN subinterface. For each inline interface on which hardware bypass is available, the component interfaces are set to standby mode. If the sensor is powered off, reset, or if the NIC interfaces fail or are unloaded, those paired interfaces enter fail-open state in hardware (traffic flows unimpeded through inline interface). Any other inline interfaces enter fail-closed state.

- When bypass is set to AUTO (traffic flows without inspection), software bypass is activated if SensorApp fails.

  For each inline interface on which hardware bypass is available, the component interfaces are set to standby mode. If the sensor is powered off, reset, or if the NIC interfaces fail or are unloaded, those paired interfaces enter fail-open state in hardware. Any other inline interfaces enter the fail-closed state.

  Note To test fail-over, set the bypass mode to ON or AUTO, create one or more inline interfaces and power down the sensor and verify that traffic still flows through the inline path.

For More Information

For the procedure for configuring inline bypass mode, see Configuring Inline Bypass Mode, page 5-39.

Hardware Bypass Configuration Restrictions

To use the hardware bypass feature on the 4GE bypass interface card, you must pair interfaces to support the hardware design of the card. If you create an inline interface that pairs a hardware-bypass-capable interface with an interface that violates one or more of the hardware-bypass configuration restrictions, hardware bypass is deactivated on the inline interface and you receive a warning message similar to the following:

```
Hardware bypass functionality is not available on Inline-interface pair0.
Physical-interface GigabitEthernet2/0 is capable of performing hardware bypass only when
paired with GigabitEthernet2/1, and both interfaces are enabled and configured with the
same speed and duplex settings.
```

The following configuration restrictions apply to hardware bypass:

- The 4-port bypass card is only supported on the IPS 4260 and IPS 4270-20.
- Fail-open hardware bypass only works on inline interfaces (interface pairs), not on inline VLAN pairs.
- Fail-open hardware bypass is available on an inline interface if all of the following conditions are met:
  - Both of the physical interfaces support hardware bypass.
  - Both of the physical interfaces are on the same interface card.
  - The two physical interfaces are associated in hardware as a bypass pair.
  - The speed and duplex settings are identical on the physical interfaces.
  - Both of the interfaces are administratively enabled.
- Autonegotiation must be set on MDI/X switch ports connected to the IPS 4260 and IPS 4270-20.

  You must configure both the sensor ports and the switch ports for autonegotiation for hardware bypass to work. The switch ports must support MDI/X, which automatically reverses the transmit and receive lines if necessary to correct any cabling problems. The sensor is only guaranteed to operate correctly with the switch if both of them are configured for identical speed and duplex, which means that the sensor must be set for autonegotiation too.

Hardware Bypass Turned Off for System Image Recovery or Reimage

Hardware bypass starts when you enter the **recover application** command and the interfaces are paired correctly. Hardware bypass works until the IPS starts up again with the empty configuration. Because all interfaces default to `disabled` and are no longer paired, when the SensorApp loads, it stops hardware bypass and sets the interfaces to `link down`. BEFORE you perform a reimage or recover, make sure you bypass the traffic at the switch.

Interface Configuration Restrictions

For IPS standalone appliances with 1 G and 10 G fixed or add-on interfaces, the maximum jumbo frame size is 9216 bytes. For integrated IPS sensors, such as the ASA 5500-X and ASA 5585-X series, refer to the following URL for information:

http://www.cisco.com/en/US/docs/security/asa/asa84/configuration/guide/interface_start.html#wp1328869

Note A jumbo frame is an Ethernet packet that is larger than the standard maximum of 1518 bytes (including Layer 2 header and FCS).

The following restrictions apply to configuring interfaces on the sensor:

- Physical Interfaces
  - In IPS 7.1, rx/tx flow control is disabled on the IPS 4200 series sensors. This is a change from IPS 7.0 where rx/tx flow control is enabled by default.
  - On the ASA IPS modules (ASA 5500 AIP SSM, ASA 5500-X IPS SSP, and ASA 5585-X IPS SSP) all backplane interfaces have fixed speed, duplex, and state settings. These settings are protected in the default configuration on all backplane interfaces.
  - For nonbackplane FastEthernet interfaces the valid speed settings are 10 Mbps, 100 Mbps, and auto. Valid duplex settings are full, half, and auto.
  - For Gigabit copper interfaces (1000-TX on the IPS 4240, IPS 4255, IPS 4260, IPS 4270-20, IPS 4345, IPS 4360, IPS 4510, and IPS 4520), valid speed settings are 10 Mbps, 100 Mbps, 1000 Mbps, and auto. Valid duplex settings are full, half, and auto.
  - For Gigabit (copper or fiber) interfaces, if the speed is configured for 1000 Mbps, the only valid duplex setting is auto.
  - The command and control interface cannot also serve as a sensing interface.
- Inline Interface Pairs
  - Inline interface pairs can contain any combination of sensing interfaces regardless of the physical interface type (copper versus fiber), speed, or duplex settings of the interface. However, pairing interfaces of different media type, speeds, and duplex settings may not be fully tested or supported.
  - The command and control interface cannot be a member of an inline interface pair.
  - You cannot pair a physical interface with itself in an inline interface pair.
  - A physical interface can be a member of only one inline interface pair.
  - You can only configure bypass mode and create inline interface pairs on sensor platforms that support inline mode.
  - A physical interface cannot be a member of an inline interface pair unless the subinterface mode of the physical interface is **none**.
  - You can configure the ASA IPS modules (ASA 5500 AIP SSM, ASA 5500-X IPS SSP, and ASA 5585-X IPS SSP) to operate inline even though they have only one sensing interface.
- Inline VLAN Pairs
  - You cannot pair a VLAN with itself.
  - You cannot use the default VLAN as one of the paired VLANs in an inline VLAN pair.
  - For a given sensing interface, a VLAN can be a member of only one inline VLAN pair. However, a given VLAN can be a member of an inline VLAN pair on more than one sensing interface.
  - The order in which you specify the VLANs in an inline VLAN pair is not significant.
  - A sensing interface in Inline VLAN Pair mode can have from 1 to 255 inline VLAN pairs.

  - The ASA IPS modules (ASA 5500 AIP SSM, ASA 5500-X IPS SSP, and ASA 5585-X IPS SSP) do not support inline VLAN pairs.
  - For the IPS 4510 and IPS 4520, the maximum number of inline VLAN pairs you can create system wide is 150. On all other platforms, the limit is 255 per interface.
- Alternate TCP Reset Interface
  - You can only assign the alternate TCP reset interface to a sensing interface. You cannot configure the command and control interface as an alternate TCP reset interface. The alternate TCP reset interface option is set to **none** as the default and is protected for all interfaces except the sensing interfaces.
  - You can assign the same physical interface as an alternate TCP reset interface for multiple sensing interfaces.
  - A physical interface can serve as both a sensing interface and an alternate TCP reset interface.
  - The command and control interface cannot serve as the alternate TCP reset interface for a sensing interface.
  - A sensing interface cannot serve as its own alternate TCP reset interface.
  - You can only configure interfaces that are capable of TCP resets as alternate TCP reset interfaces.
  - There is only one sensing interface on the ASA IPS modules (ASA 5500 AIP SSM, ASA 5500-X IPS SSP, and ASA 5585-X IPS SSP), so you cannot designate an alternate TCP reset interface.
- VLAN Groups
  - You can configure any single interface for promiscuous, inline interface pair, or inline VLAN pair mode, but no combination of these modes is allowed.
  - You cannot add a VLAN to more than one group on each interface.
  - You cannot add a VLAN group to multiple virtual sensors.
  - An interface can have no more than 255 user-defined VLAN groups.
  - When you pair a physical interface, you cannot subdivide it; you can subdivide the pair.
  - You can use a VLAN on multiple interfaces; however, you receive a warning for this configuration.
  - You can assign a virtual sensor to any combination of one or more physical interfaces and inline VLAN pairs, subdivided or not.
  - You can subdivide both physical and logical interfaces into VLAN groups.
  - The CLI, IDM, and IME prompt you to remove any dangling references. You can leave the dangling references and continue editing the configuration.
  - The CLI, IDM, and IME do not allow configuration changes in Analysis Engine that conflict with the interface configuration.
  - The CLI allows configuration changes in the interface configuration that cause conflicts in the Analysis Engine configuration. The IDM and IME do *not* allow changes in the interface configuration that cause conflicts in the Analysis Engine configuration.
  - The ASA IPS modules (ASA 5500 AIP SSM, ASA 5500-X IPS SSP, and ASA 5585-X IPS SSP) do not support VLAN groups mode.

For More Information

- For a list of supported sensor interfaces, see Interface Support, page 5-7.
- For more information on alternate TCP reset, see TCP Reset Interfaces, page 5-5.
- For more information on physical interfaces, see Configuring Physical Interfaces, page 5-15.

Interface Configuration Sequence

Follow these steps to configure interfaces on the sensor:

1. Configure the physical interface settings (speed, duplex, and so forth) and enable the interfaces.
2. Create or delete inline interfaces, inline VLAN subinterfaces, and VLAN groups, and set the inline bypass mode.
3. Assign the physical, subinterfaces, and inline interfaces to the virtual sensor.

For More Information

- For the procedure for configuring the physical interface settings, see Configuring Physical Interfaces, page 5-15.
- For the procedures for creating and deleting different kinds of interfaces, see Configuring Inline Interface Mode, page 5-20, Configuring Inline VLAN Pair Mode, page 5-25, Configuring VLAN Group Mode, page 5-31, and Configuring Inline Bypass Mode, page 5-38.
- For the procedure for configuring virtual sensors, see Adding, Editing, and Deleting Virtual Sensors, page 6-5.

Configuring Physical Interfaces

Note For information on what you need to configure if you are using the hardware bypass card on the IPS 4260 and the IPS 4270-20, see Hardware Bypass Configuration Restrictions, page 5-12.

Use the **physical-interfaces** *interface_name* command in the service interface submode to configure promiscuous interfaces. The interface name is FastEthernet, GigabitEthernet, or PortChannel.

Note You configure the ASA IPS modules (ASA 5500 AIP SSM, ASA 5500-X IPS SSP, and ASA 5585-X IPS SSP) for promiscuous mode from the adaptive security appliance CLI and not from the Cisco IPS CLI.

The following options apply:

- **admin-state {enabled | disabled}**—Specifies the administrative link state of the interface, whether the interface is enabled or disabled.

  Note On all backplane sensing interfaces on all modules, **admin-state** is set to enabled and is protected (you cannot change the setting). The **admin-state** has no effect (and is protected) on the command and control interface. It only affects sensing interfaces. The command and control interface does not need to be enabled because it cannot be monitored.

- **alt-tcp-reset-interface**—Sends TCP resets out an alternate interface when this interface is used for promiscuous monitoring and the reset action is triggered by a signature firing.

  Note You can only assign a sensing interface as an alternate TCP reset interface. You cannot configure the management interface as an alternate TCP reset interface.

  Note There is only one sensing interface on the ASA IPS modules (ASA 5500 AIP SSM, ASA 5500-X IPS SSP, and ASA 5585-X IPS SSP), so you cannot designate an alternate TCP reset interface.

  - *interface_name*—Specifies the name of the interface on which TCP resets should be sent when this interface is used for promiscuous monitoring and the reset action is triggered by a signature firing. This setting is ignored when this interface is a member of an inline interface.
  - **none** —Disables the use of an alternate TCP reset interface. TCP resets triggered by the reset action when in promiscuous mode will be sent out of this interface instead.
- **default**—Sets the value back to the system default setting.
- **description**—Specifies your description of the promiscuous interface.
- **duplex**—Specifies the duplex setting of the interface:
  - **auto**—Sets the interface to auto negotiate duplex.
  - **full**—Sets the interface to full duplex.
  - **half**—Sets the interface to half duplex.

  Note The **duplex** option is protected on all modules.

  Note For TenGigabit SFP+ ports, the permitted values are auto and full.
- **no**—Removes an entry or selection setting.
- **speed**—Specifies the speed setting of the interface:
  - **auto**—Sets the interface to auto negotiate speed.
  - **10**—Sets the interface to 10 MB (for TX interfaces only).
  - **100**—Sets the interface to 100 MB (for TX interfaces only).
  - **1000**—Sets the interface to 1 GB (for Gigabit interfaces only).

  Note The **speed** option is protected on all modules.

  Note For TenGigabit SFP+ ports with a 10 Gb connector, the permitted values are auto and 10000, and for TenGigabit SFP+ ports with a 1 Gb connector, the permitted value is auto.

Configuring the Physical Interface Settings

To configure the physical interface settings for promiscuous mode on the sensor, follow these steps:

Step 1 Log in to the CLI using an account with administrator privileges.

Step 2 Enter interface submode.

```
sensor# configure terminal
sensor(config)# service interface
```

Step 3 Display the list of available interfaces.

```
sensor(config-int)# physical-interfaces ?
GigabitEthernet0/0     GigabitEthernet0/0 physical interface.
GigabitEthernet0/1     GigabitEthernet0/1 physical interface.
GigabitEthernet0/2     GigabitEthernet0/2 physical interface.
GigabitEthernet0/3     GigabitEthernet0/3 physical interface.
Management0/0          Management0/0 physical interface.
sensor(config-int)# physical-interfaces
```

Step 4 Specify the interface for promiscuous mode.

```
sensor(config-int)# physical-interfaces GigabitEthernet0/2
```

Step 5 Enable the interface. You must assigned the interface to a virtual sensor and enable it before it can monitor traffic.

```
sensor(config-int-phy)# admin-state enabled
```

Step 6 Add a description of this interface.

```
sensor(config-int-phy)# description INT1
```

Step 7 Specify the duplex settings. This option is not available on the ASA IPS modules (ASA 5500 AIP SSM, ASA 5500-X IPS SSP ASA 5585-X IPS SSP).

```
sensor(config-int-phy)# duplex full
```

Step 8 Specify the speed. This option is not available on the ASA IPS modules (ASA 5500 AIP SSM, ASA 5500-X IPS SSP ASA 5585-X IPS SSP).

```
sensor(config-int-phy)# speed 1000
```

Step 9 Enable TCP resets for this interface if desired. This option is not available on the ASA IPS modules (ASA 5500 AIP SSM, ASA 5500-X IPS SSP ASA 5585-X IPS SSP).

```
sensor(config-int-phy)# alt-tcp-reset-interface interface-name GigabitEthernet2/0
```

Step 10 Repeat Steps 4 through 9 for any other interfaces you want to designate as promiscuous interfaces.

Step 11 Verify the settings.

Note Make sure the `subinterface-type` is *`none`*, the default. You use the **subinterface-type** command to configure inline VLAN pairs.

```
sensor(config-int-phy)# show settings
   <protected entry>
   name: GigabitEthernet0/2
   ----------------------------------------------
      media-type: tx <protected>
      description: INT1 default:
      admin-state: enabled default: disabled
```

```
      duplex: full default: auto
      speed: 1000 default: auto
     alt-tcp-reset-interface
     ---------------------------------------------
        interface-name: GigabitEthernet2/0
     ---------------------------------------------
     subinterface-type
     ---------------------------------------------
        none
        ---------------------------------------------
        ---------------------------------------------
     ---------------------------------------------
  ---------------------------------------------
sensor(config-int-phy)#
```

Step 12 Remove TCP resets from an interface.

```
sensor(config-int-phy)# alt-tcp-reset-interface none
```

Step 13 Verify the settings.

```
sensor(config-int-phy)# show settings
   <protected entry>
   name: GigabitEthernet0/0
   ---------------------------------------------
      media-type: tx <protected>
      description: <defaulted>
      admin-state: disabled <protected>
      duplex: auto <defaulted>
      speed: auto <defaulted>
      alt-tcp-reset-interface
      ---------------------------------------------
         none
         ---------------------------------------------
         ---------------------------------------------
      ---------------------------------------------
   ---------------------------------------------
sensor(config-int-phy)#
```

Step 14 Exit interface submode.

```
sensor(config-int-phy)# exit
sensor(config-int)# exit
Apply Changes:?[yes]:
```

Step 15 Press **Enter** to apply the changes or enter **no** to discard them.

For More Information

- For a list of possible interfaces for your sensor, see Interface Support, page 5-7.
- For the procedure for sending traffic to the ASA 5500 AIP SSM, see Sending Traffic to the ASA 5500 AIP SSM, page 18-10.
- For the procedure for sending traffic to the ASA 5500-X IPS SSP, see Creating Virtual Sensors for the ASA 5500-X IPS SSP, page 19-3.
- For the procedure for sending traffic to the ASA 5585-X IPS SSP, see Creating Virtual Sensors for the ASA 5585-X IPS SSP, page 20-4.
- For more information on the alternate TCP reset interface, see Understanding Alternate TCP Reset Interfaces, page 5-5 and Designating the Alternate TCP Reset Interface, page 5-6.

- For the procedure for configuring inline VLAN pairs, see Configuring Inline VLAN Pair Mode, page 5-25.
- For the procedure for adding interfaces to virtual sensors, see Adding, Editing, and Deleting Virtual Sensors, page 6-5.

Configuring Promiscuous Mode

This section describes promiscuous mode on the sensor, and contains the following topics:

Understanding Promiscuous Mode

In promiscuous mode, packets do not flow through the sensor. The sensor analyzes a copy of the monitored traffic rather than the actual forwarded packet. The advantage of operating in promiscuous mode is that the sensor does not affect the packet flow with the forwarded traffic. The disadvantage of operating in promiscuous mode, however, is the sensor cannot stop malicious traffic from reaching its intended target for certain types of attacks, such as atomic attacks (single-packet attacks). The response actions implemented by promiscuous sensor devices are post-event responses and often require assistance from other networking devices, for example, routers and firewalls, to respond to an attack. While such response actions can prevent some classes of attacks, in atomic attacks the single packet has the chance of reaching the target system before the promiscuous-based sensor can apply an ACL modification on a managed device (such as a firewall, switch, or router).

By default, all sensing interfaces are in promiscuous mode. To change an interface from inline interface mode to promiscuous mode, delete any inline interface that contains that interface and delete any inline VLAN pair subinterfaces of that interface from the interface configuration.

Figure 5-1 illustrates promiscuous mode:

Figure 5-1 Promiscuous Mode

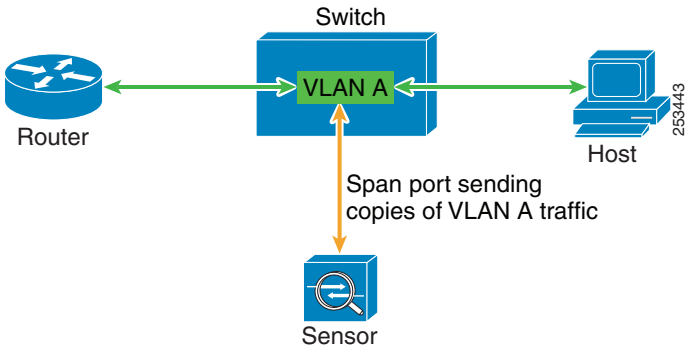

Configuring Promiscuous Mode

By default, all sensing interfaces are in promiscuous mode. To change an interface from inline mode to promiscuous mode, delete the inline interface that contains that interface from the interface configuration.

IPv6, Switches, and Lack of VACL Capture

VACLs on Catalyst switches do not have IPv6 support. The most common method for copying traffic to a sensor configured in promiscuous mode is to use VACL capture. If you want to have IPv6 support, you can use SPAN ports.

However, you can only configure up to two monitor sessions on a switch unless you use the following configuration:

- Monitor session
- Multiple trunks to one or more sensors
- Restrict per trunk port which VLANs are allowed to perform monitoring of many VLANs to more than two different sensors or virtual sensors within one IPS

The following configuration uses one SPAN session to send all of the traffic on any of the specified VLANs to all of the specified ports. Each port configuration only allows a particular VLAN or VLANs to pass. Thus you can send data from different VLANs to different sensors or virtual sensors all with one SPAN configuration line:

```
clear trunk 4/1-4 1-4094
set trunk 4/1 on dot1q 930
set trunk 4/2 on dot1q 932
set trunk 4/3 on dot1q 960
set trunk 4/4 on dot1q 962
set span 930, 932, 960, 962 4/1-4 both
```

Note The SPAN/Monitor configuration is valuable when you want to assign different IPS policies per VLAN or when you have more bandwidth to monitor than one interface can handle.

Configuring Inline Interface Mode

This section describes inline mode on the sensor, and contains the following topics:

- Understanding Inline Interface Mode, page 5-20
- Configuring Inline Interface Pairs, page 5-21

Understanding Inline Interface Mode

Operating in inline interface pair mode puts the IPS directly into the traffic flow and affects packet-forwarding rates making them slower by adding latency. This allows the sensor to stop attacks by dropping malicious traffic before it reaches the intended target, thus providing a protective service. Not only is the inline device processing information on Layers 3 and 4, but it is also analyzing the contents

and payload of the packets for more sophisticated embedded attacks (Layers 3 to 7). This deeper analysis lets the system identify and stop and/or block attacks that would normally pass through a traditional firewall device.

In inline interface pair mode, a packet comes in through the first interface of the pair on the sensor and out the second interface of the pair. The packet is sent to the second interface of the pair unless that packet is being denied or modified by a signature.

Note You can configure the ASA IPS modules (ASA 5500 AIP SSM, ASA 5500-X IPS SSP, and ASA 5585-X IPS SSP) to operate inline even though they have only one sensing interface.

Note If the paired interfaces are connected to the same switch, you should configure them on the switch as access ports with different access VLANs for the two ports. Otherwise, traffic does not flow through the inline interface.

Figure 5-2 illustrates inline interface pair mode:

Figure 5-2 Inline Interface Pair Mode

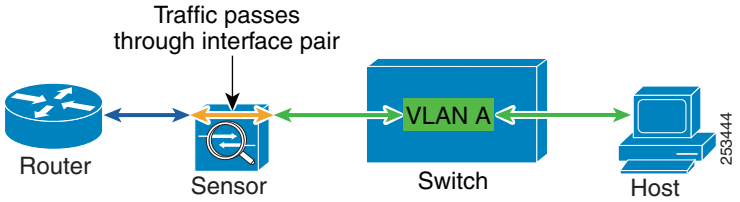

Configuring Inline Interface Pairs

Note For information on what you need to configure if you are using the hardware bypass card on the IPS 4260 and the IPS 4270-20, see Hardware Bypass Configuration Restrictions, page 5-12.

Use the **inline-interfaces** *name* command in the service interface submode to create inline interface pairs.

Note You can configure the ASA IPS modules (ASA 5500 AIP SSM, ASA 5500-X IPS SSP, and ASA 5585-X IPS SSP) to operate inline even though they have only one sensing interface.

The following options apply:

- **inline-interfaces** *name*—Specifies the name of the logical inline interface pair.
- **default**—Sets the value back to the system default setting.
- **description**—Specifies your description of the inline interface pair.
- **interface1** *interface_name*—Specifies the first interface in the inline interface pair.
- **interface2** *interface_name*—Specifies the second interface in the inline interface pair.

- **no**—Removes an entry or selection setting.
- **admin-state {enabled | disabled}**—Specifies the administrative link state of the interface, whether the interface is enabled or disabled.

Note On all backplane sensing interfaces on all modules, **admin-state** is set to enabled and is protected (you cannot change the setting). The **admin-state** has no effect (and is protected) on the command and control interface. It only affects sensing interfaces. The command and control interface does not need to be enabled because it cannot be monitored.

Creating Inline Interface Pairs

To create inline interface pairs, follow these steps:

Step 1 Log in to the CLI using an account with administrator privileges.

Step 2 Enter interface submode.

```
sensor# configure terminal
sensor(config)# service interface
sensor(config-int)#
```

Step 3 Verify that the subinterface mode is “none” for both of the physical interfaces you are pairing in the inline interface.

```
sensor(config-int)# show settings
   physical-interfaces (min: 0, max: 999999999, current: 2)
   ----------------------------------------------
      <protected entry>
      name: GigabitEthernet0/0 <defaulted>
      ----------------------------------------------
         media-type: tx <protected>
         description: <defaulted>
         admin-state: disabled <protected>
         duplex: auto <defaulted>
         speed: auto <defaulted>
         alt-tcp-reset-interface
         ----------------------------------------------
            none
            ----------------------------------------------
            ----------------------------------------------
         ----------------------------------------------
         subinterface-type
         ----------------------------------------------
            none
            ----------------------------------------------
            ----------------------------------------------
         ----------------------------------------------
      ----------------------------------------------
```

Step 4 Name the inline pair.

```
sensor(config-int)# inline-interfaces PAIR1
```

Step 5 Display the available interfaces.

```
sensor(config-int)# interface1 ?
GigabitEthernet0/0     GigabitEthernet0/0 physical interface.
GigabitEthernet0/1     GigabitEthernet0/1 physical interface.
GigabitEthernet0/2     GigabitEthernet0/2 physical interface.
GigabitEthernet0/3     GigabitEthernet0/3 physical interface.
Management0/0          Management0/0 physical interface.
```

Step 6 Configure two interfaces into a pair. You must assign the interface to a virtual sensor and enable it before it can monitor traffic (see Step 10).

```
sensor(config-int-inl)# interface1 GigabitEthernet0/0
sensor(config-int-inl)# interface2 GigabitEthernet0/1
```

Step 7 Add a description of the interface pair.

```
sensor(config-int-inl)# description PAIR1 Gig0/0 and Gig0/1
```

Step 8 Repeat Steps 4 through 7 for any other interfaces that you want to configure into inline interface pairs.

Step 9 Verify the settings.

```
sensor(config-int-inl)# show settings
   name: PAIR1
   ----------------------------------------------
      description: PAIR1 Gig0/0 & Gig0/1 default:
      interface1: GigabitEthernet0/0
      interface2: GigabitEthernet0/1
   ----------------------------------------------
```

Step 10 Enable the interfaces assigned to the interface pair.

```
sensor(config-int)# exit
sensor(config-int)# physical-interfaces GigabitEthernet0/0
sensor(config-int-phy)# admin-state enabled
sensor(config-int-phy)# exit
sensor(config-int)# physical-interfaces GigabitEthernet0/1
sensor(config-int-phy)# admin-state enabled
sensor(config-int-phy)# exit
sensor(config-int)#
```

Step 11 Verify that the interfaces are enabled.

```
sensor(config-int)# show settings
   physical-interfaces (min: 0, max: 999999999, current: 5)
   ----------------------------------------------
      <protected entry>
      name: GigabitEthernet0/0
      ----------------------------------------------
         media-type: tx <protected>
         description: <defaulted>
         admin-state: enabled default: disabled
         duplex: auto <defaulted>
         speed: auto <defaulted>
         default-vlan: 0 <defaulted>
         alt-tcp-reset-interface
         ----------------------------------------------
            none
            ----------------------------------------------
            ----------------------------------------------
         ----------------------------------------------
         subinterface-type
         ----------------------------------------------
            none
            ----------------------------------------------
            ----------------------------------------------
         ----------------------------------------------
      ----------------------------------------------
      <protected entry>
      name: GigabitEthernet0/1
      ----------------------------------------------
         media-type: tx <protected>
```

```
            description: <defaulted>
            admin-state: enabled default: disabled
            duplex: auto <defaulted>
            speed: auto <defaulted>
            default-vlan: 0 <defaulted>
            alt-tcp-reset-interface
            ----------------------------------------------
               none
               ----------------------------------------------
               ----------------------------------------------
            ----------------------------------------------
            subinterface-type
            ----------------------------------------------
               none
               ----------------------------------------------
               ----------------------------------------------
            ----------------------------------------------
         ----------------------------------------------
         <protected entry>
         name: GigabitEthernet0/2 <defaulted>
         ----------------------------------------------
            media-type: tx <protected>
            description: <defaulted>
            admin-state: disabled <defaulted>
            duplex: auto <defaulted>
            speed: auto <defaulted>
            default-vlan: 0 <defaulted>
            alt-tcp-reset-interface
            ----------------------------------------------
               none
               ----------------------------------------------
               ----------------------------------------------
            ----------------------------------------------
            subinterface-type
            ----------------------------------------------
               none
               ----------------------------------------------
               ----------------------------------------------
            ----------------------------------------------
         ----------------------------------------------
         <protected entry>
         name: GigabitEthernet0/3 <defaulted>
         ----------------------------------------------
            media-type: tx <protected>
--MORE--
```

Step 12 Delete an inline interface pair and return the interfaces to promiscuous mode. You must also delete the inline interface pair from the virtual sensor to which it is assigned.

```
sensor(config-int)# no inline-interfaces PAIR1
```

Step 13 Verify the inline interface pair has been deleted.

```
sensor(config-int)# show settings
  ----------------------------------------------
  command-control: Management0/0 <protected>
  inline-interfaces (min: 0, max: 999999999, current: 0)
  ----------------------------------------------
  ----------------------------------------------
  bypass-mode: auto <defaulted>
  interface-notifications
  ----------------------------------------------
```

Step 14 Exit interface configuration submode.

```
sensor(config-int)# exit
Apply Changes:?[yes]:
```

Step 15 Press **Enter** to apply the changes or enter **no** to discard them.

For More Information

- For the procedure for configuring inline interface mode for the ASA 5500 AIP SSM, see Sending Traffic to the ASA 5500 AIP SSM, page 18-10.
- For the procedure for configuring inline interface mode for the ASA 5500-X IPS SSP, see Assigning Virtual Sensors to Adaptive Security Appliance Contexts, page 19-6.
- For the procedure for configuring inline interface mode for the ASA 5585-X IPS SSP, see Assigning Virtual Sensors to Adaptive Security Appliance Contexts, page 20-7.
- For the procedure for assigning inline interface pairs to a virtual sensor, or deleting the inline interface pair from the virtual sensor to which it is assigned, see Adding, Editing, and Deleting Virtual Sensors, page 6-5.

Configuring Inline VLAN Pair Mode

This section describes inline VLAN pair mode and how to configure inline VLAN pairs. It contains the following topics:

Understanding Inline VLAN Pair Mode

Note For information on what you need to configure if you are using the hardware bypass card on the IPS 4260 and the IPS 4270-20, see Hardware Bypass Configuration Restrictions, page 5-12.

Note The ASA IPS modules (ASA 5500 AIP SSM, ASA 5500-X IPS SSP, and ASA 5585-X IPS SSP) do not support inline VLAN pairs.

Note For the IPS 4510 and IPS 4520, the maximum number of inline VLAN pairs you can create system wide is 150. On all other platforms, the limit is 255 per interface.

You can associate VLANs in pairs on a physical interface. This is known as inline VLAN pair mode. Packets received on one of the paired VLANs are analyzed and then forwarded to the other VLAN in the pair.

Inline VLAN pair mode is an active sensing mode where a sensing interface acts as an 802.1q trunk port, and the sensor performs VLAN bridging between pairs of VLANs on the trunk. The sensor inspects the traffic it receives on each VLAN in each pair, and can either forward the packets on the other VLAN in the pair, or drop the packet if an intrusion attempt is detected. You can configure an IPS sensor to simultaneously bridge up to 255 VLAN pairs on each sensing interface. The sensor replaces the VLAN ID field in the 802.1q header of each received packet with the ID of the egress VLAN on which the sensor forwards the packet. The sensor drops all packets received on any VLANs that are not assigned to inline VLAN pairs.

Note You cannot use the default VLAN as one of the paired VLANs in an inline VLAN pair.

Figure 5-3 illustrates inline VLAN pair mode:

Figure 5-3 Inline VLAN Pair Mode

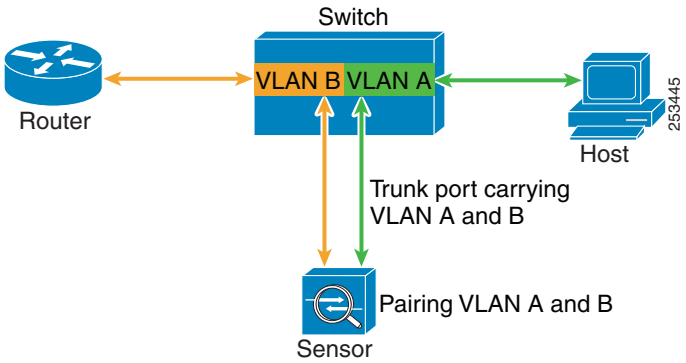

Configuring Inline VLAN Pairs

Use the **physical-interfaces** *interface_name* command in the service interface submode to configure inline VLAN pairs. The interface name is FastEthernet or GigabitEthernet.

The following options apply:

- **admin-state {enabled | disabled}**—Specifies the administrative link state of the interface, whether the interface is enabled or disabled.

  Note On all backplane sensing interfaces on all modules, **admin-state** is set to enabled and is protected (you cannot change the setting). The **admin-state** has no effect (and is protected) on the command and control interface. It only affects sensing interfaces. The command and control interface does not need to be enabled because it cannot be monitored.

- **default**—Sets the value back to the system default setting.
- **description**—Specifies the description of the interface.
- **duplex**—Specifies the duplex setting of the interface:
  - **auto**—Sets the interface to auto negotiate duplex.
  - **full**—Sets the interface to full duplex.

  - **half**—Sets the interface to half duplex.

    Note The **duplex** option is protected on all modules.

- **no**—Removes an entry or selection setting.
- **speed**—Specifies the speed setting of the interface:
  - **auto**—Sets the interface to auto negotiate speed.
  - **10**—Sets the interface to 10 MB (for TX interfaces only).
  - **100**—Sets the interface to 100 MB (for TX interfaces only).
  - **1000**—Sets the interface to 1 GB (for Gigabit interfaces only).

    Note The **speed** option is protected on all modules.

- **subinterface-type**—Specifies that the interface is a subinterface and what type of subinterface is defined.
  - **inline-vlan-pair**—Lets you define the subinterface as an inline VLAN pair.
  - **none**—No subinterfaces defined.
- **subinterface** *name*—Defines the subinterface as an inline VLAN pair:
  - **vlan1**—Specifies the first VLAN in the inline VLAN pair.
  - **vlan2**—Specifies the second VLAN in the inline VLAN pair.

Configuring Inline VLAN Pairs

To configure the inline VLAN pair settings on the sensor, follow these steps:

Step 1 Log in to the CLI using an account with administrator privileges.

Step 2 Enter interface submode.

```
sensor# configure terminal
sensor(config)# service interface
sensor(config-int)#
```

Step 3 Verify if any inline interfaces exist (the subinterface type should read “none” if no inline interfaces have been configured).

```
sensor(config-int)# show settings
   physical-interfaces (min: 0, max: 999999999, current: 5)
   ----------------------------------------------
      <protected entry>
      name: GigabitEthernet0/0 <defaulted>
      ---------------------------------------------
         media-type: tx <protected>
         description: <defaulted>
         admin-state: disabled <defaulted>
         duplex: auto <defaulted>
         speed: auto <defaulted>
         alt-tcp-reset-interface
         ----------------------------------------------
            none
            ---------------------------------------------
            ---------------------------------------------
```

```
   ----------------------------------------------
   subinterface-type
   ----------------------------------------------
      none
      ----------------------------------------------
      ----------------------------------------------
   ----------------------------------------------
----------------------------------------------
<protected entry>
name: GigabitEthernet0/1 <defaulted>
----------------------------------------------
   media-type: tx <protected>
   description: <defaulted>
   admin-state: disabled <defaulted>
   duplex: auto <defaulted>
   speed: auto <defaulted>
   alt-tcp-reset-interface
   ----------------------------------------------
      none
      ----------------------------------------------
      ----------------------------------------------
   ----------------------------------------------
   subinterface-type
   ----------------------------------------------
      none
      ----------------------------------------------
      ----------------------------------------------
   ----------------------------------------------
----------------------------------------------
<protected entry>
name: GigabitEthernet0/2 <defaulted>
----------------------------------------------
   media-type: tx <protected>
   description: <defaulted>
   admin-state: disabled <defaulted>
   duplex: auto <defaulted>
   speed: auto <defaulted>
   alt-tcp-reset-interface
   ----------------------------------------------
      none
      ----------------------------------------------
      ----------------------------------------------
   ----------------------------------------------
   subinterface-type
   ----------------------------------------------
      none
      ----------------------------------------------
      ----------------------------------------------
   ----------------------------------------------
----------------------------------------------
<protected entry>
name: GigabitEthernet0/3 <defaulted>
----------------------------------------------
   media-type: tx <protected>
   description: <defaulted>
   admin-state: disabled <defaulted>
   duplex: auto <defaulted>
   speed: auto <defaulted>
   alt-tcp-reset-interface
   ----------------------------------------------
      none
      ----------------------------------------------
      ----------------------------------------------
   ----------------------------------------------
```

```
            subinterface-type
            ---------------------------------------------
               none
               ---------------------------------------------
               ---------------------------------------------
            ---------------------------------------------
         ---------------------------------------------
         <protected entry>
         name: Management0/0 <defaulted>
         ---------------------------------------------
            media-type: tx <protected>
            description: <defaulted>
            admin-state: disabled <protected>
            duplex: auto <defaulted>
            speed: auto <defaulted>
            alt-tcp-reset-interface
            ---------------------------------------------
               none
               ---------------------------------------------
               ---------------------------------------------
            ---------------------------------------------
            subinterface-type
            ---------------------------------------------
               none
               ---------------------------------------------
               ---------------------------------------------
            ---------------------------------------------
         ---------------------------------------------
      ---------------------------------------------
      command-control: Management0/0 <protected>
      inline-interfaces (min: 0, max: 999999999, current: 0)
      ---------------------------------------------
      ---------------------------------------------
      bypass-mode: auto <defaulted>
      interface-notifications
      ---------------------------------------------
         missed-percentage-threshold: 0 percent <defaulted>
         notification-interval: 30 seconds <defaulted>
         idle-interface-delay: 30 seconds <defaulted>
      ---------------------------------------------
sensor(config-int)#
```

Step 4 If there are inline interfaces that are using this physical interface, remove them. You must also delete the inline interface from the virtual sensor to which it is assigned.

```
sensor(config-int)# no inline-interfaces interface_name
```

Step 5 Display the list of available interfaces.

```
sensor(config-int)# physical-interfaces ?
GigabitEthernet0/0     GigabitEthernet0/0 physical interface.
GigabitEthernet0/1     GigabitEthernet0/1 physical interface.
GigabitEthernet0/2     GigabitEthernet0/2 physical interface.
GigabitEthernet0/3     GigabitEthernet0/3 physical interface.
Management0/0          Management0/0 physical interface.
sensor(config-int)# physical-interfaces
```

Step 6 Designate an interface.

```
sensor(config-int)# physical-interfaces GigabitEthernet0/2
```

Step 7 Enable the interface. You must assign the interface to a virtual sensor and enable it before it can monitor traffic.

```
sensor(config-int-phy)# admin-state enabled
```

Step 8 Add a description of this interface.

```
sensor(config-int-phy)# description INT1
```

Step 9 Configure the duplex settings. This option is not available on the ASA IPS modules (ASA 5500 AIP SSM, ASA 5500-X IPS SSP, and ASA 5585-X IPS SSP).

```
sensor(config-int-phy)# duplex full
```

Step 10 Configure the speed. This option is not available on the ASA IPS modules (ASA 5500 AIP SSM, ASA 5500-X IPS SSP, and ASA 5585-X IPS SSP).

```
sensor(config-int-phy)# speed 1000
```

Step 11 Set up the inline VLAN pair.

```
sensor(config-int-phy)# subinterface-type inline-vlan-pair
sensor(config-int-phy-inl)# subinterface 1
sensor(config-int-phy-inl-sub)# vlan1 52
sensor(config-int-phy-inl-sub)# vlan2 53
```

Step 12 Add a description for the inline VLAN pair.

```
sensor(config-int-phy-inl-sub)# description INT1 vlans 52 and 53
```

Step 13 Verify the inline VLAN pair settings.

```
sensor(config-int-phy-inl-sub)# show settings
   subinterface-number: 1
   ----------------------------------------------
      description: INT1 vlans 52 and 53 default:
      vlan1: 52
      vlan2: 53
   ----------------------------------------------
sensor(config-int-phy-inl-sub)#
```

Step 14 To delete VLAN pairs:

a. Delete one VLAN pair.

```
sensor(config-int-phy-inl-sub)# exit
sensor(config-int-phy-inl)# no subinterface 1
```

If this VLAN pair is the last one on the sensor, you receive the following error message:

```
Error: This "subinterface-type" contains less than the required number of
"subinterface" entries. Please add entry(s) to reach the minimum required entries or
select a different "subinterface-type".
```

Go to Step b to remove the last VLAN pair.

b. Delete all VLAN pairs.

```
sensor(config-int-phy-inl-sub)# exit
sensor(config-int-phy-inl)# exit
sensor(config-int-phy)# subinterface-type none
```

Step 15 Exit interface submode. You must also delete the interface from the virtual sensor to which it is assigned.

```
sensor(config-int-phy-inl-sub)# exit
sensor(config-int-phy-inl)# exit
sensor(config-int-phy)# exit
```

```
sensor(config-int)# exit
Apply Changes:?[yes]:
```

Step 16 Press **Enter** to apply the changes or enter **no** to discard them.

For More Information

For the procedure for assigning inline interface pairs to a virtual sensor, or deleting the inline interface pair from the virtual sensor to which it is assigned, see Adding, Editing, and Deleting Virtual Sensors, page 6-5.

Configuring VLAN Group Mode

This section describes VLAN Group mode and how to configure VLAN groups. It contains the following topics:

Understanding VLAN Group Mode

Note The ASA IPS modules (ASA 5500 AIP SSM, ASA 5500-X IPS SSP, and ASA 5585-X IPS SSP) do not support VLAN groups mode.

You can divide each physical interface or inline interface into VLAN group subinterfaces, each of which consists of a group of VLANs on that interface. Analysis Engine supports multiple virtual sensors, each of which can monitor one or more of these interfaces. This lets you apply multiple policies to the same sensor. The advantage is that now you can use a sensor with only a few interfaces as if it had many interfaces.

Note You cannot divide physical interfaces that are in inline VLAN pairs into VLAN groups.

VLAN group subinterfaces associate a set of VLANs with a physical or inline interface. No VLAN can be a member of more than one VLAN group subinterface. Each VLAN group subinterface is identified by a number between 1 and 255. Subinterface 0 is a reserved subinterface number used to represent the entire unvirtualized physical or logical interface. You cannot create, delete, or modify subinterface 0 and no statistics are reported for it.

An unassigned VLAN group is maintained that contains all VLANs that are not specifically assigned to another VLAN group. You cannot directly specify the VLANs that are in the unassigned group. When a VLAN is added to or deleted from another VLAN group subinterface, the unassigned group is updated.

Packets in the native VLAN of an 802.1q trunk do not normally have 802.1q encapsulation headers to identify the VLAN number to which the packets belong. A default VLAN variable is associated with each physical interface and you should set this variable to the VLAN number of the native VLAN or to 0. The value 0 indicates that the native VLAN is either unknown or you do not care if it is specified. If the default VLAN setting is 0, the following occurs:

- Any alerts triggered by packets without 802.1q encapsulation have a VLAN value of 0 reported in the alert.
- Non-802.1q encapsulated traffic is associated with the unassigned VLAN group and it is not possible to assign the native VLAN to any other VLAN group.

Note You can configure a port on a switch as either an access port or a trunk port. On an access port, all traffic is in a single VLAN is called the access VLAN. On a trunk port, multiple VLANs can be carried over the port, and each packet has a special header attached called the 802.1q header that contains the VLAN ID. This header is commonly referred as the VLAN tag. However, a trunk port has a special VLAN called the native VLAN. Packets in the native VLAN do not have the 802.1q headers attached.

Deploying VLAN Groups

Because a VLAN group of an inline pair does not translate the VLAN ID, an inline paired interface must exist between two switches to use VLAN groups on a logical interface. For an appliance, you can connect the two pairs to the same switch, make them access ports, and then set the access VLANs for the two ports differently. In this configuration, the sensor connects between two VLANs, because each of the two ports is in access mode and carries only one VLAN. In this case the two ports must be in different VLANs, and the sensor bridges the two VLANs, monitoring any traffic that flows between the two VLANs.

You can also connect appliances between two switches. There are two variations. In the first variation, the two ports are configured as access ports, so they carry a single VLAN. In this way, the sensor bridges a single VLAN between the two switches.

In the second variation, the two ports are configured as trunk ports, so they can carry multiple VLANs. In this configuration, the sensor bridges multiple VLANs between the two switches. Because multiple VLANs are carried over the inline interface pair, the VLANs can be divided into groups and each group can be assigned to a virtual sensor.

Configuring VLAN Groups

Note For information on what you need to configure if you are using the hardware bypass card on the IPS 4260 and the IPS 4270-20, see Hardware Bypass Configuration Restrictions, page 5-12.

Use the **physical-interfaces** *interface_name* command in the service interface submode to configure inline VLAN groups. The interface name is FastEthernet or GigabitEthernet.

The following options apply:

- **admin-state {enabled | disabled}**—Specifies the administrative link state of the interface, whether the interface is enabled or disabled.

  Note On all backplane sensing interfaces on all modules, **admin-state** is set to enabled and is protected (you cannot change the setting). The **admin-state** has no effect (and is protected) on the command and control interface. It only affects sensing interfaces. The command and control interface does not need to be enabled because it cannot be monitored.

- **default**—Sets the value back to the system default setting.
- **description**—Specifies the description of the interface.
- **duplex**—Specifies the duplex setting of the interface:
  - **auto**—Sets the interface to auto negotiate duplex.
  - **full**—Sets the interface to full duplex.
  - **half**—Sets the interface to half duplex.

    Note The **duplex** option is protected on all modules.

- **no**—Removes an entry or selection setting.
- **speed**—Specifies the speed setting of the interface:
  - **auto**—Sets the interface to auto negotiate speed.
  - **10**—Sets the interface to 10 MB (for TX interfaces only).
  - **100**—Sets the interface to 100 MB (for TX interfaces only).
  - **1000**—Sets the interface to 1 GB (for Gigabit interfaces only).

    Note The **speed** option is protected on all modules.

- **subinterface-type**—Specifies that the interface is a subinterface and what type of subinterface is defined.
  - **vlan-group**—Lets you define the subinterface as a VLAN group.
  - **none**—Speechifies that no subinterfaces are defined.
- **subinterface** *name*—Defines the subinterface as a VLAN group:
  - **vlans {range | unassigned}**—Specifies the set of VLANs in the VLAN group. The value for **range** is 1 to 4095 in a comma-separated pattern of individual VLAN IDs or ranges: 1,5-8,10-15. There are no spaces between the entries.

Configuring Inline VLAN Groups

To configure the inline VLAN group settings on the sensor, follow these steps:

Step 1 Log in to the CLI using an account with administrator privileges.

Step 2 Enter interface submode.

```
sensor# configure terminal
```

```
sensor(config)# service interface
sensor(config-int)#
```

Step 3 Verify if any inline interfaces exist (the subinterface type should read “none” if no inline interfaces have been configured).

```
sensor(config-int)# show settings
   physical-interfaces (min: 0, max: 999999999, current: 5)
   ----------------------------------------------
      <protected entry>
      name: GigabitEthernet0/0 <defaulted>
      ---------------------------------------------
         media-type: tx <protected>
         description: <defaulted>
         admin-state: disabled <defaulted>
         duplex: auto <defaulted>
         speed: auto <defaulted>
         alt-tcp-reset-interface
         ----------------------------------------------
            none
            ----------------------------------------------
            ----------------------------------------------
         ----------------------------------------------
         subinterface-type
         ----------------------------------------------
            none
            ----------------------------------------------
            ----------------------------------------------
         ----------------------------------------------
      ----------------------------------------------
      <protected entry>
      name: GigabitEthernet0/1 <defaulted>
      ---------------------------------------------
         media-type: tx <protected>
         description: <defaulted>
         admin-state: disabled <defaulted>
         duplex: auto <defaulted>
         speed: auto <defaulted>
         alt-tcp-reset-interface
         ----------------------------------------------
            none
            ----------------------------------------------
            ----------------------------------------------
         ----------------------------------------------
         subinterface-type
         ----------------------------------------------
            none
            ----------------------------------------------
            ----------------------------------------------
         ----------------------------------------------
      ----------------------------------------------
      <protected entry>
      name: GigabitEthernet0/2 <defaulted>
      ---------------------------------------------
         media-type: tx <protected>
         description: <defaulted>
         admin-state: disabled <defaulted>
         duplex: auto <defaulted>
         speed: auto <defaulted>
         alt-tcp-reset-interface
         ----------------------------------------------
            none
            ----------------------------------------------
            ----------------------------------------------
```

```
            ----------------------------------------------
            subinterface-type
            ----------------------------------------------
               none
               ----------------------------------------------
               ----------------------------------------------
            ----------------------------------------------
         ----------------------------------------------
         <protected entry>
         name: GigabitEthernet0/3 <defaulted>
         ----------------------------------------------
            media-type: tx <protected>
            description: <defaulted>
            admin-state: disabled <defaulted>
            duplex: auto <defaulted>
            speed: auto <defaulted>
            alt-tcp-reset-interface
            ----------------------------------------------
               none
               ----------------------------------------------
               ----------------------------------------------
            ----------------------------------------------
            subinterface-type
            ----------------------------------------------
               none
               ----------------------------------------------
               ----------------------------------------------
            ----------------------------------------------
         ----------------------------------------------
         <protected entry>
         name: Management0/0 <defaulted>
         ----------------------------------------------
            media-type: tx <protected>
            description: <defaulted>
            admin-state: disabled <protected>
            duplex: auto <defaulted>
            speed: auto <defaulted>
            alt-tcp-reset-interface
            ----------------------------------------------
               none
               ----------------------------------------------
               ----------------------------------------------
            ----------------------------------------------
            subinterface-type
            ----------------------------------------------
               none
               ----------------------------------------------
               ----------------------------------------------
            ----------------------------------------------
         ----------------------------------------------
      ----------------------------------------------
      command-control: Management0/0 <protected>
      inline-interfaces (min: 0, max: 999999999, current: 0)
      ----------------------------------------------
      ----------------------------------------------
      bypass-mode: auto <defaulted>
      interface-notifications
      ----------------------------------------------
         missed-percentage-threshold: 0 percent <defaulted>
         notification-interval: 30 seconds <defaulted>
         idle-interface-delay: 30 seconds <defaulted>
      ----------------------------------------------
   sensor(config-int)#
```

Step 4 If there are inline interfaces that are using this physical interface, remove them.

```
sensor(config-int)# no inline-interfaces interface_name
```

Step 5 Display the list of available interfaces.

```
sensor(config-int)# physical-interfaces ?
GigabitEthernet0/0     GigabitEthernet0/0 physical interface.
GigabitEthernet0/1     GigabitEthernet0/1 physical interface.
GigabitEthernet0/2     GigabitEthernet0/2 physical interface.
GigabitEthernet0/3     GigabitEthernet0/3 physical interface.
Management0/0          Management0/0 physical interface.
sensor(config-int)# physical-interfaces
```

Step 6 Specify an interface.

```
sensor(config-int)# physical-interfaces GigabitEthernet0/2
```

Step 7 Enable the interface. You must also assign the interface to a virtual sensor and enable it before it can monitor traffic.

```
sensor(config-int-phy)# admin-state enabled
```

Step 8 Add a description of this interface.

```
sensor(config-int-phy)# description INT1
```

Step 9 Specify the duplex settings. This option is not available on the ASA IPS modules (ASA 5500 AIP SSM, ASA 5500-X IPS SSP, ASA 5585-X IPS SSP).

```
sensor(config-int-phy)# duplex full
```

Step 10 Specify the speed. This option is not available on the ASA IPS modules (ASA 5500 AIP SSM, ASA 5500-X IPS SSP, ASA 5585-X IPS SSP).

```
sensor(config-int-phy)# speed 1000
```

Step 11 Set up the VLAN group.

```
sensor(config-int-phy)# subinterface-type vlan-group
sensor(config-int-phy-vla)# subinterface 1
```

Step 12 Assign the VLANs to this group:

a. Assign specific VLANs.

```
sensor(config-int-phy-vla-sub)# vlans range 1,5-8,10-15
sensor(config-int-phy-vla-sub)#
```

b. Verify the settings.

```
sensor(config-int-phy-vla-sub)# show settings
   subinterface-number: 1
   ----------------------------------------------
      description: <defaulted>
      vlans
      ----------------------------------------------
         range: 1,5-8,10-15
      ----------------------------------------------
   ----------------------------------------------
sensor(config-int-phy-vla-sub)#
```

c. Configure unassigned VLANs.

```
sensor(config-int-phy-vla-sub)# vlans unassigned
sensor(config-int-phy-vla-sub)#
```

d. Verify the settings.

```
sensor(config-int-phy-vla-sub)# show settings
   subinterface-number: 1
   ----------------------------------------------
      description: <defaulted>
      vlans
      ---------------------------------------------
         unassigned
         ---------------------------------------------
         ---------------------------------------------
      ---------------------------------------------
   ----------------------------------------------
sensor(config-int-phy-vla-sub)#
```

Note Assigning the unassigned VLANs to a separate virtual sensor allows you to specify a policy for all VLANs that you have not specifically assigned to other groups. For example, you can group your important internal VLANs in one group and apply a stringent security policy to that group. You can group the other less important unassigned VLANs into another group, and apply the default security policy to that group, so that only very serious alerts are reported.

Step 13 Add a description for the VLAN group.

```
sensor(config-int-phy-inl-sub)# description INT1 vlans 52 and 53
```

Step 14 Verify the VLAN group settings.

```
sensor(config-int-phy-vla-sub)# show settings
   subinterface-number: 1
   ----------------------------------------------
      description: GROUP1 default:
      vlans
      ---------------------------------------------
         unassigned
         ---------------------------------------------
         ---------------------------------------------
      ---------------------------------------------
   ----------------------------------------------
sensor(config-int-phy-vla-sub)#
```

Step 15 Delete VLAN groups:

a. Delete one VLAN group.

```
sensor(config-int-phy-vla-sub)# exit
sensor(config-int-phy-vla)# no subinterface 1
```

If this VLAN group is the last one on the sensor, you receive an error message.

```
Error: This "subinterface-type" contains less than the required number of
"subinterface" entries. Please add entry(s) to reach the minimum required entries or
select a different "subinterface-type".
```

Go to Step b to remove the last VLAN group.

b. Delete all VLAN groups. You must also delete the VLAN group from the virtual sensor to which it is assigned.

```
sensor(config-int-phy-vla-sub)# exit
sensor(config-int-phy-vla)# exit
sensor(config-int-phy)# subinterface-type none
```

Step 16 Exit interface submode.

```
sensor(config-int-phy-vla-sub)# exit
sensor(config-int-phy-vla)# exit
sensor(config-int-phy)# exit
sensor(config-int)# exit
Apply Changes:?[yes]:
```

Step 17 Press **Enter** to apply the changes or enter **no** to discard them.

For More Information

For the procedure for assigning inline interface pairs to a virtual sensor, or deleting the inline interface pair from the virtual sensor to which it is assigned, see Adding, Editing, and Deleting Virtual Sensors, page 6-5.

Configuring Inline Bypass Mode

This section describes inline bypass mode for sensors configured as inline interface and inline VLAN pairs, and contains the following topics:

Understanding Inline Bypass Mode

Note The ASA 5500-X IPS SSP and ASA 5585-X IPS SSP do not support bypass mode. The adaptive security appliance will either fail open, fail close, or fail over depending on the configuration of the adaptive security appliance and the type of activity being done on the IPS.

Note For information on what you need to configure if you are using the hardware bypass card on the IPS 4260 and the IPS 4270-20, see Hardware Bypass Configuration Restrictions, page 5-12.

Caution There are security consequences when you put the sensor in bypass mode. When bypass mode is on, the traffic bypasses the sensor and is not inspected; therefore, the sensor cannot prevent malicious attacks.

Caution As with signature updates, when the sensor applies a global correlation update, it may trigger bypass. Whether or not bypass is triggered depends on the traffic load of the sensor and the size of the signature/global correlation update. If bypass mode is turned off, an inline sensor stops passing traffic while the update is being applied.

You can use inline bypass as a diagnostic tool and a failover protection mechanism. Normally, the sensor Analysis Engine performs packet analysis. When inline bypass is activated, the Analysis Engine is bypassed, allowing traffic to flow through the inline interfaces and inline VLAN pairs without inspection. Inline bypass ensures that packets continue to flow through the sensor when the sensor processes are temporarily stopped for upgrades or when the sensor monitoring processes fail. There are three modes: on, off, and automatic. By default, bypass mode is set to automatic.

The inline bypass functionality is implemented in software, so it only functions when the operating system is running. If the sensor is powered off or shut down, inline bypass does not work—traffic does not flow through the sensor.

For IPS 4510 and IPS 4520, when the SensorApp is not running or if bypass mode is on, the following occurs:

- The output from the **packet capture/display** command does not show any packets.
- The **show interface** and **show interface** *interface_name* commands do not show VLAN statistics.

Configuring Inline Bypass Mode

Use the **bypass-mode** command in the service interface submode to configure bypass mode. The following options apply:

- **off**—Turns off inline bypassing. Packet inspection is performed on inline data traffic. However, inline traffic is interrupted if the Analysis Engine is stopped.
- **on**—Turns on inline bypassing. No packet inspection is performed on the traffic. Inline traffic continues to flow even if the Analysis Engine is stopped.
- **auto**—Turns on automatic bypassing. The sensor automatically begins bypassing inline packet inspection if the Analysis Engine stops processing packets. This prevents data interruption on inline interfaces. This is the default.

Configuring Bypass Mode

To configure bypass mode, follow these steps:

Step 1 Log in to the CLI using an account with administrator privileges.

Step 2 Enter interface submode.

```
sensor# configure terminal
sensor(config)# service interface
```

Step 3 Configure bypass mode.

```
sensor(config-int)# bypass-mode off
```

Step 4 Verify the settings.

```
sensor(config-int)# show settings
-----------------------------------------------
 bypass-mode: off default: auto
 interface-notifications
 -----------------------------------------------
    missed-percentage-threshold: 0 percent <defaulted>
    notification-interval: 30 seconds <defaulted>
    idle-interface-delay: 30 seconds <defaulted>
 -----------------------------------------------
sensor(config-int)#
```

Step 5 Exit interface submode.

```
sensor(config-int)# exit
Apply Changes:?[yes]:
```

Step 6 Press **Enter** to apply the changes or enter **no** to discard them.

For More Information

- For detailed information on the ASA 5500 AIP SSM and bypass mode, see The Adaptive Security Appliance, ASA 5500 AIP SSM, and Bypass Mode, page 18-12.
- For more information on inline bypass mode, see Configuring Inline Bypass Mode, page 5-38.

Configuring Interface Notifications

You can configure the sensor to monitor the flow of packets across an interface and send notification if that flow changes (starts/stops) during a specified interval. You can configure the missed packet threshold within a specific notification interval and also configure the interface idle delay before a status event is reported.

Use the **interface-notifications** command in the service interface submode to configure traffic notifications.

The following options apply:

- **default**—Sets the value back to the system default setting.
- **idle-interface-delay**—Specifies the number of seconds an interface must be idle before sending a notification. The valid range is 5 to 3600. The default is 30 seconds.
- **missed-percentage-threshold**—Specifies the percentage of packets that must be missed during a specified interval before notification will be sent. The valid range is 0 to 100. The default is 0.
- **notification-interval**—Specifies the interval to check for missed packet percentage. The valid range is 5 to 3600. The default is 30 seconds

Configuring Interface Notifications

To configure the interface notification settings, follow these steps:

Step 1 Log in to the CLI using an account with administrator privileges.

Step 2 Enter global configuration mode.

```
sensor# configure terminal
```

Step 3 Enter interface submode.

```
sensor(config)# service interface
```

Step 4 Enter interface notifications submode.

```
sensor(config-int)# interface-notifications
```

Step 5 Specify the idle interface delay.

```
sensor(config-int-int)# idle-interface-delay 60
```

Step 6 Specify the missed percentage threshold.

```
sensor(config-int-int)# missed-percentage-threshold 1
```

Step 7 Specify the notification interval.

```
sensor(config-int-int)# notification-interval 60
```

Step 8 Verify the settings.

```
sensor(config-int-int)# show settings
   interface-notifications
   ---------------------------------------------
      missed-percentage-threshold: 1 percent default: 0
      notification-interval: 60 seconds default: 30
      idle-interface-delay: 60 seconds default: 30
   ---------------------------------------------
sensor(config-int-int)#
```

Step 9 Exit interface notifications submode.

```
sensor(config-int-int)# exit
sensor(config-int)# exit
Apply Changes:?[yes]:
```

Step 10 Press **Enter** to apply the changes or enter **no** to discard them.

Configuring CDP Mode

Note The ASA 5500-X IPS SSP and the ASA 5585-X IPS SSP do not support CDP mode.

You can configure the sensor to enable or disable the forwarding of CDP packets. This action applies globally to all interfaces.

Cisco Discovery Protocol is a media- and protocol-independent device-discovery protocol that runs on all Cisco-manufactured equipment, including routers, access servers, bridges, and switches. Using CDP, a device can advertise its existence to other devices and receive information about other devices on the same LAN or on the remote side of a WAN. CDP runs on all media that support SNAP, including LANs, Frame Relay, and ATM media.

User the **cdp-mode** command in service interface mode to have the sensor either forward or drop CDP packets.

The following option applies:

- **cdp-mode** {**forward-cdp-packets** | **drop-cdp-packets**}—Configures the sensor to either forward CDP packets or drop CDP packets. The default is drop-cdp-packets.

Enabling CDP Mode

To configure CDP mode, follow these steps:

Step 1 Log in to the CLI using an account with administrator privileges.

Step 2 Enter interface submode.

```
sensor# configure terminal
```

```
sensor(config)# service interface
```

Step 3 Enable CDP mode.

```
sensor(config-int)# cdp-mode forward-cdp-packets
```

Step 4 Verify the settings.

```
sensor(config-int)# show settings
-----------------------------------------------
bypass-mode: auto <defaulted>
   interface-notifications
   -----------------------------------------------
      missed-percentage-threshold: 0 percent <defaulted>
      notification-interval: 30 seconds <defaulted>
      idle-interface-delay: 30 seconds <defaulted>
   -----------------------------------------------
   cdp-mode: forward-cdp-packets default: drop-cdp-packets
sensor(config-int)#
```

Displaying Interface Statistics

Note The **show interface** command output for the IPS 4510 and IPS 4520 does not include the total undersize packets or total transmit FIFO overruns.

Note When the IPS 4510 and IPS 4520 are in bypass mode, VLAN statistics in the **show interface** and packet **display/capture** command output do not show any packets.

Note For IPS standalone appliances with 1 G and 10 G fixed or add-on interfaces, the maximum jumbo frame size is 9216 bytes. For integrated IPS sensors, such as the ASA 5500-X and ASA 5585-X series, refer to the following URL for information:
http://www.cisco.com/en/US/docs/security/asa/asa84/configuration/guide/interface_start.html#wp1328869
A jumbo frame is an Ethernet packet that is larger than the standard maximum of 1518 bytes (including Layer 2 header and FCS).

Note The jumbo packet count in the **show interface** command output from the lines `Total Jumbo Packets Received` and `Total Jumbo Packets Transmitted` for ASA IPS modules may be larger than expected due to some packets that were almost jumbo size on the wire being counted as jumbo size by the IPS. This miscount is a result of header bytes added to the packet by the ASA before the packet is transmitted to the IPS. For IPv4, 58 bytes of header data are added. For IPv6, 78 bytes of header data are added. The ASA removes the added IPS header before the packet leaves the ASA.

Use the **show interfaces** [**clear** | **brief**] command in EXEC mode to display statistics for all system interfaces. Use the **show interfaces** {**FastEthernet** | **GigabitEthernet** | **Management** | **PortChannel**} [*slot/port*] command to display statistics for specific interfaces.

The following options apply:

- **clear**—(Optional) Clears the diagnostics.
- **brief**—(Optional) Displays a summary of the usability status information for each interface.
- **FastEthernet**—Displays statistics for FastEthernet interfaces.
- **GigabitEthernet**—Displays statistics for GigabitEthernet interfaces.
- **Management**—Displays statistics for Management interfaces.

Note Only platforms with external ports marked *Management* support this keyword.

- **PortChannel**—Displays statistics for PortChannel interfaces
- *slot/port*—Displays statistics for the specific slot/port of the interface.

To display interface statistics, follow these steps:

Step 1 Log in to the CLI.

Step 2 Display statistics for all interfaces.

```
sensor# show interfaces
Interface Statistics
   Total Packets Received = 0
   Total Bytes Received = 0
   Missed Packet Percentage = 0
   Current Bypass Mode = Auto_off
MAC statistics from interface GigabitEthernet0/0
   Statistics From Subinterface 12
      Vlans in this group = 12
      Total Packets Received On This Vlan Group = 0
      Total Bytes Received On This Vlan Group = 0
      Total Packets Transmitted On This Vlan Group = 0
      Total Bytes Transmitted On This Vlan Group = 0
   Statistics From Subinterface 16
      Vlans in this group = 10
      Total Packets Received On This Vlan Group = 0
      Total Bytes Received On This Vlan Group = 0
      Total Packets Transmitted On This Vlan Group = 0
      Total Bytes Transmitted On This Vlan Group = 0
   Statistics From Subinterface 25
      Vlans in this group = 11
      Total Packets Received On This Vlan Group = 0
      Total Bytes Received On This Vlan Group = 0
      Total Packets Transmitted On This Vlan Group = 0
      Total Bytes Transmitted On This Vlan Group = 0
--MORE--
```

Step 3 Show a brief summary of the interfaces. The * indicates that the interface is the command and control interface.

```
sensor# show interfaces brief
CC   Interface            Sensing State   Link   Inline Mode   Pair Status
     GigabitEthernet0/0   Disabled        Down   Unpaired      N/A
*    Management0/0        Disabled        Up
     GigabitEthernet0/1   Disabled        Down   Unpaired      N/A
     GigabitEthernet0/2   Disabled        Down   Unpaired      N/A
     GigabitEthernet0/3   Disabled        Down   Unpaired      N/A
sensor#
```

Step 4 Display the statistics for a specific interface.

```
sensor# show interfaces Management0/0
MAC statistics from interface Management0/0
   Interface function = Command-control interface
   Description =
   Media Type = TX
   Default Vlan = 0
   Link Status = Up
   Link Speed = Auto_100
   Link Duplex = Auto_Full
   Total Packets Received = 4305909
   Total Bytes Received = 280475712
   Total Multicast Packets Received = 0
   Total Receive Errors = 0
   Total Receive FIFO Overruns = 0
   Total Packets Transmitted = 973627
   Total Bytes Transmitted = 437632618
   Total Transmit Errors = 0
   Total Transmit FIFO Overruns = 0
sensor#
```

Step 5 Clear the statistics.

```
sensor# show interfaces clear
Interface Statistics
   Total Packets Received = 0
   Total Bytes Received = 0
   Missed Packet Percentage = 0
   Current Bypass Mode = Auto_off
MAC statistics from interface GigabitEthernet0/0
   Statistics From Subinterface 12
      Vlans in this group = 12
      Total Packets Received On This Vlan Group = 0
      Total Bytes Received On This Vlan Group = 0
      Total Packets Transmitted On This Vlan Group = 0
      Total Bytes Transmitted On This Vlan Group = 0
   Statistics From Subinterface 16
      Vlans in this group = 10
      Total Packets Received On This Vlan Group = 0
      Total Bytes Received On This Vlan Group = 0
      Total Packets Transmitted On This Vlan Group = 0
      Total Bytes Transmitted On This Vlan Group = 0
   Statistics From Subinterface 25
      Vlans in this group = 11
      Total Packets Received On This Vlan Group = 0
      Total Bytes Received On This Vlan Group = 0
      Total Packets Transmitted On This Vlan Group = 0
      Total Bytes Transmitted On This Vlan Group = 0
--MORE--
```

For More Information

For information on slot and port numbers and which platforms have a Management port, refer to *Cisco Intrusion Prevention System Appliances and Modules Installation Guide for IPS 7.1*.

Displaying Interface Traffic History

Use the **show interfaces-history** [**traffic-by-hour** | **traffic-by-minute**] command in EXEC mode to display historical interfaces statistics for all system interfaces. The historical information for each interface is maintained for three days with 60 seconds granularity. Use the **show interfaces-history {FastEthernet | GigabitEthernet | Management | PortChannel} [traffic-by-hour | traffic-by-minute**] command to display statistics for specific interfaces.

Note You must have health monitoring enabled to support the historic interface function.

Each record has the following details:

- Total packets received
- Total bytes received
- FIFO overruns
- Receive errors
- Received Mbps
- Missed packet percentage
- Average load
- Peak load

Note Historical data for each interface for the past 72 hours is also included in the **show tech-support** command.

The following options apply:

- **traffic-by-hour**—Displays interface traffic history by the hour.
- **traffic-by-minute**—Displays interface traffic history by the minute.
- **past**—Displays historical interface traffic information.
- **HH:MM**—Specifies the amount of time to go back in the past to begin the traffic display. The range for HH is 0 to 72. The range for MM is 0 to 59. The minimum value is 00:01 and the maximum value is 72:00.
- **FastEthernet**—Displays statistics for FastEthernet interfaces.
- **GigabitEthernet**—Displays statistics for GigabitEthernet interfaces.
- **Management**—Displays statistics for Management interfaces.

  Note Only platforms with external ports marked *Management* support this keyword.

- **PortChannel**—Displays statistics for PortChannel interfaces.

Displaying Historical Interface Statistics

Use the **show interfaces-history** [**traffic-by-hour** | **traffic-by-minute**] command in EXEC mode to display historical interfaces statistics for all system interfaces. The historical information for each interface is maintained for three days with 60 seconds granularity. Use the **show interfaces-history {FastEthernet | GigabitEthernet | Management | PortChannel} [traffic-by-hour | traffic-by-minute**] command to display statistics for specific interfaces.

Note You must have health monitoring enabled to support the historic interface function.

Each record has the following details:

- Total packets received
- Total bytes received
- FIFO overruns
- Receive errors
- Received Mbps
- Missed packet percentage
- Average load
- Peak load

Note Historical data for each interface for the past 72 hours is also included in the **show tech-support** command.

The following options apply:

- **traffic-by-hour**—Displays interface traffic history by the hour.
- **traffic-by-minute**—Displays interface traffic history by the minute.
- **past**—Displays historical interface traffic information.
- **HH:MM**—Specifies the amount of time to go back in the past to begin the traffic display. The range for HH is 0 to 72. The range for MM is 0 to 59. The minimum value is 00:01 and the maximum value is 72:00.
- **FastEthernet**—Displays statistics for FastEthernet interfaces.
- **GigabitEthernet**—Displays statistics for GigabitEthernet interfaces.
- **Management**—Displays statistics for Management interfaces.

  Note Only platforms with external ports marked *Management* support this keyword.

- **PortChannel**—Displays statistics for PortChannel interfaces.

Displaying Historical Interface Statistics

To display interface traffic history, follow these steps:

Step 1 Log in to the CLI.

Step 2 Display the interface traffic history by the hour.

```
sensor# show interfaces-history traffic-by-hour past 02:15
GigabitEthernet0/0
Time                          Packets Received  Bytes Received  Mbps  MPP FIFO Overruns  Receive Errors  Avg Load  Peak Load
11:30:31 UTC Tue Mar 05 2013  0                 0               0     0   0              0               0         0
10:27:32 UTC Tue Mar 05 2013  0                 0               0     0   0              0               0         0

GigabitEthernet0/1
Time                          Packets Received  Bytes Received  Mbps  MPP FIFO Overruns  Receive Errors  Avg Load  Peak Load
11:30:31 UTC Tue Mar 05 2013  0                 0               0     0   0              0               0         0
10:27:32 UTC Tue Mar 05 2013  0                 0               0     0   0              0               0         0

GigabitEthernet0/2
Time                          Packets Received  Bytes Received  Mbps  MPP FIFO Overruns  Receive Errors  Avg Load  Peak Load
11:30:31 UTC Tue Mar 05 2013  0                 0               0     0   0              0               0         0
10:27:32 UTC Tue Mar 05 2013  0                 0               0     0   0              0               0         0

GigabitEthernet0/3
Time                          Packets Received  Bytes Received  Mbps  MPP FIFO Overruns  Receive Errors  Avg Load  Peak Load
11:30:31 UTC Tue Mar 05 2013  0                 0               0     0   0              0               0         0
10:27:32 UTC Tue Mar 05 2013  0                 0               0     0   0              0               0         0

Management0/0
Time                          Packets Received  Bytes Received  Mbps  MPP FIFO Overruns  Receive Errors  Avg Load  Peak Load
11:30:31 UTC Tue Mar 05 2013  31071600          3240924703      0     0   0              0               0         0
10:27:32 UTC Tue Mar 05 2013  30859941          3216904786      0     0   0              0               0         0

--MORE--
```

Step 3 Display the interface traffic history by the minute.

```
sensor# show interfaces-history traffic-by-minute past 00:45
GigabitEthernet0/0
Time                          Packets Received  Bytes Received  Mbps   MPP FIFO Overruns  Receive Errors  Avg Load  Peak
Load
12:27:49 UTC Tue Mar 05 2013  0                 0               0      0   0              0               0         0
12:26:45 UTC Tue Mar 05 2013  0                 0               0      0   0              0               0         0
12:25:48 UTC Tue Mar 05 2013  0                 0               0      0   0              0               0         0
12:24:42 UTC Tue Mar 05 2013  0                 0               0      0   0              0               0         0
12:23:37 UTC Tue Mar 05 2013  0                 0               0      0   0              0               0         0
12:22:30 UTC Tue Mar 05 2013  0                 0               0      0   0              0               0         0
12:21:31 UTC Tue Mar 05 2013  0                 0               0      0   0              0               0         0
12:20:29 UTC Tue Mar 05 2013  0                 0               0      0   0              0               0         0
12:19:25 UTC Tue Mar 05 2013  0                 0               0      0   0              0               0         0
12:18:18 UTC Tue Mar 05 2013  0                 0               0      0   0              0               0         0
12:17:12 UTC Tue Mar 05 2013  0                 0               0      0   0              0               0         0
12:16:07 UTC Tue Mar 05 2013  0                 0               0      0   0              0               0         0
12:15:00 UTC Tue Mar 05 2013  0                 0               0      0   0              0               0         0
12:13:54 UTC Tue Mar 05 2013  0                 0               0      0   0              0               0         0
12:12:49 UTC Tue Mar 05 2013  0                 0               0      0   0              0               0         0
12:11:43 UTC Tue Mar 05 2013  0                 0               0      0   0              0               0         0
12:10:36 UTC Tue Mar 05 2013  0                 0               0      0   0              0               0         0
12:09:30 UTC Tue Mar 05 2013  0                 0               0      0   0              0               0         0
12:08:24 UTC Tue Mar 05 2013  0                 0               0      0   0              0               0         0
12:07:25 UTC Tue Mar 05 2013  0                 0               0      0   0              0               0         0
12:06:23 UTC Tue Mar 05 2013  0                 0               0      0   0              0               0         0
12:05:25 UTC Tue Mar 05 2013  0                 0               0      0   0              0               0         0
sensor#
```

Step 4 Display the interface traffic history for a specific interface.

```
sensor# show interfaces-history GigabitEthernet0/0 traffic-by-minute past 00:05
GigabitEthernet0/0
Time                          Packets Received  Bytes Received  Mbps  MPP FIFO Overruns  Receive Errors  Avg Load  Peak Load
13:34:38 UTC Thu Mar 07 2013  0                 0               0     0   0              0               0         0
13:33:35 UTC Thu Mar 07 2013  0                 0               0     0   0              0               0         0
13:32:32 UTC Thu Mar 07 2013  0                 0               0     0   0              0               0         0
13:31:27 UTC Thu Mar 07 2013  0                 0               0     0   0              0               0         0
13:30:25 UTC Thu Mar 07 2013  0                 0               0     0   0              0               0         0
sensor#
```

For More Information

For information on enabling health monitoring, see Configuring Health Status Information, page 17-15.