Cisco XR 12416 and Cisco XR 12816 Router Chassis Installation Guide

March 2009

Americas Headquarters
Cisco Systems, Inc.
170 West Tasman Drive
San Jose, CA 95134-1706
USA
http://www.cisco.com
Tel: 408 526-4000
800 553-NETS (6387)
Fax: 408 527-0883

Text Part Number: OL-17440-01

THE SPECIFICATIONS AND INFORMATION REGARDING THE PRODUCTS IN THIS MANUAL ARE SUBJECT TO CHANGE WITHOUT NOTICE. ALL STATEMENTS, INFORMATION, AND RECOMMENDATIONS IN THIS MANUAL ARE BELIEVED TO BE ACCURATE BUT ARE PRESENTED WITHOUT WARRANTY OF ANY KIND, EXPRESS OR IMPLIED. USERS MUST TAKE FULL RESPONSIBILITY FOR THEIR APPLICATION OF ANY PRODUCTS.

THE SOFTWARE LICENSE AND LIMITED WARRANTY FOR THE ACCOMPANYING PRODUCT ARE SET FORTH IN THE INFORMATION PACKET THAT SHIPPED WITH THE PRODUCT AND ARE INCORPORATED HEREIN BY THIS REFERENCE. IF YOU ARE UNABLE TO LOCATE THE SOFTWARE LICENSE OR LIMITED WARRANTY, CONTACT YOUR CISCO REPRESENTATIVE FOR A COPY.

The following information is for FCC compliance of Class A devices: This equipment has been tested and found to comply with the limits for a Class A digital device, pursuant to part 15 of the FCC rules. These limits are designed to provide reasonable protection against harmful interference when the equipment is operated in a commercial environment. This equipment generates, uses, and can radiate radio-frequency energy and, if not installed and used in accordance with the instruction manual, may cause harmful interference to radio communications. Operation of this equipment in a residential area is likely to cause harmful interference, in which case users will be required to correct the interference at their own expense.

The following information is for FCC compliance of Class B devices: The equipment described in this manual generates and may radiate radio-frequency energy. If it is not installed in accordance with Cisco's installation instructions, it may cause interference with radio and television reception. This equipment has been tested and found to comply with the limits for a Class B digital device in accordance with the specifications in part 15 of the FCC rules. These specifications are designed to provide reasonable protection against such interference in a residential installation. However, there is no guarantee that interference will not occur in a particular installation.

Modifying the equipment without Cisco's written authorization may result in the equipment no longer complying with FCC requirements for Class A or Class B digital devices. In that event, your right to use the equipment may be limited by FCC regulations, and you may be required to correct any interference to radio or television communications at your own expense.

You can determine whether your equipment is causing interference by turning it off. If the interference stops, it was probably caused by the Cisco equipment or one of its peripheral devices. If the equipment causes interference to radio or television reception, try to correct the interference by using one or more of the following measures:

• Turn the television or radio antenna until the interference stops.

• Move the equipment to one side or the other of the television or radio.

• Move the equipment farther away from the television or radio.

• Plug the equipment into an outlet that is on a different circuit from the television or radio. (That is, make certain the equipment and the television or radio are on circuits controlled by different circuit breakers or fuses.)

Modifications to this product not authorized by Cisco Systems, Inc. could void the FCC approval and negate your authority to operate the product.

The Cisco implementation of TCP header compression is an adaptation of a program developed by the University of California, Berkeley (UCB) as part of UCB's public domain version of the UNIX operating system. All rights reserved. Copyright © 1981, Regents of the University of California.

NOTWITHSTANDING ANY OTHER WARRANTY HEREIN, ALL DOCUMENT FILES AND SOFTWARE OF THESE SUPPLIERS ARE PROVIDED "AS IS" WITH ALL FAULTS. CISCO AND THE ABOVE-NAMED SUPPLIERS DISCLAIM ALL WARRANTIES, EXPRESSED OR IMPLIED, INCLUDING, WITHOUT LIMITATION, THOSE OF MERCHANTABILITY, FITNESS FOR A PARTICULAR PURPOSE AND NONINFRINGEMENT OR ARISING FROM A COURSE OF DEALING, USAGE, OR TRADE PRACTICE.

IN NO EVENT SHALL CISCO OR ITS SUPPLIERS BE LIABLE FOR ANY INDIRECT, SPECIAL, CONSEQUENTIAL, OR INCIDENTAL DAMAGES, INCLUDING, WITHOUT LIMITATION, LOST PROFITS OR LOSS OR DAMAGE TO DATA ARISING OUT OF THE USE OR INABILITY TO USE THIS MANUAL, EVEN IF CISCO OR ITS SUPPLIERS HAVE BEEN ADVISED OF THE POSSIBILITY OF SUCH DAMAGES.

CCDE, CCENT, Cisco Eos, Cisco HealthPresence, the Cisco logo, Cisco Lumin, Cisco Nexus, Cisco StadiumVision, Cisco TelePresence, Cisco WebEx, DCE, and Welcome to the Human Network are trademarks; Changing the Way We Work, Live, Play, and Learn and Cisco Store are service marks; and Access Registrar, Aironet, AsyncOS, Bringing the Meeting To You, Catalyst, CCDA, CCDP, CCIE, CCIP, CCNA, CCNP, CCSP, CCVP, Cisco, the Cisco Certified Internetwork Expert logo, Cisco IOS, Cisco Press, Cisco Systems, Cisco Systems Capital, the Cisco Systems logo, Cisco Unity, Collaboration Without Limitation, EtherFast, EtherSwitch, Event Center, Fast Step, Follow Me Browsing, FormShare, GigaDrive, HomeLink, Internet Quotient, IOS, iPhone, iQuick Study, IronPort, the IronPort logo, LightStream, Linksys, MediaTone, MeetingPlace, MeetingPlace Chime Sound, MGX, Networkers, Networking Academy, Network Registrar, PCNow, PIX, PowerPanels, ProConnect, ScriptShare, SenderBase, SMARTnet, Spectrum Expert, StackWise, The Fastest Way to Increase Your Internet Quotient, TransPath, WebEx, and the WebEx logo are registered trademarks of Cisco Systems, Inc. and/or its affiliates in the United States and certain other countries.

All other trademarks mentioned in this document or website are the property of their respective owners. The use of the word partner does not imply a partnership relationship between Cisco and any other company. (0812R)

Any Internet Protocol (IP) addresses used in this document are not intended to be actual addresses. Any examples, command display output, and figures included in the document are shown for illustrative purposes only. Any use of actual IP addresses in illustrative content is unintentional and coincidental.

Cisco XR 12416 and Cisco XR 12816 Router Chassis Installation Guide
© 2009 Cisco Systems, Inc. All rights reserved.

CONTENTS

Preface xi

Changes to This Document xi

Audience xii

Document Organization xii

Document Conventions xiii

Obtaining Documentation and Submitting a Service Request xiv

CHAPTER 1 **Product Overview** 1-1

Physical and Functional Description of Router 1-1

AC and DC Power Subsystems 1-4

Standard AC Power Shelf 1-4

Optional AC Power Shelf 1-6

AC Power Supplies 1-9

DC Power Shelf 1-10

DC Power Supplies 1-13

Chassis Card Cages 1-14

Upper Card Cage 1-14

Lower Card Cage 1-15

Switch Fabric Card Cage 1-15

Switch Fabric Overview 1-16

Switch Fabric Card Functionality 1-16

Clock Scheduler Cards 1-17

Switch Fabric Cards 1-17

Alarm Card and Line Card Overview 1-18

Alarm Cards 1-18

Line Cards 1-20

Route Processor 1-20

Performance Route Processor Overview 1-22

PRP PCMCIA Card Slots and Status LEDs 1-24

PRP Ethernet Ports and Status LEDs 1-24

PRP Auxiliary and Console Ports 1-26

PRP-3 LEDs 1-26

PRP Reset Switch 1-27

PRP Alphanumeric Message Displays 1-28

PRP Memory Components 1-29
PRP SDRAM 1-33
PRP SRAM 1-34
PRP NVRAM 1-34
PRP Flash Memory 1-34
Upper and Lower Cable Management Brackets 1-36
Blower Module 1-36

CHAPTER 2 **Preparing for Installation** 2-1
Safety Guidelines 2-2
Safety with Equipment 2-2
Safety with Electricity 2-3
Preventing Electrostatic Discharge Damage 2-4
Lifting Guidelines 2-6
Compliance and Safety Information 2-6
Laser Safety 2-7
Site Requirement Guidelines 2-7
Rack-Mounting Guidelines 2-7
Enclosed Rack 2-8
Open Rack 2-8
Telco Rack 2-9
Site Layout and Equipment Dimensions 2-11
Air Flow Guidelines 2-14
Temperature and Humidity Guidelines 2-16
Power Connection Guidelines 2-16
AC-Powered Routers 2-17
DC-Powered Routers 2-18
NEBS Supplemental Unit Bonding and Grounding Guidelines 2-21
Site Wiring Guidelines 2-23
PRP Port Connection Guidelines 2-24
PRP Auxiliary and Console Port Connection Guidelines 2-24
PRP Auxiliary Port Signals 2-26
PRP Console Port Signals 2-27
PRP Ethernet Connections 2-28
PRP RJ-45 Ethernet Connections 2-30
Alarm Card Connection Guidelines 2-33

CHAPTER 3 **Installing the Router** 3-1
Pre-Installation Considerations and Requirements 3-2

Required Tools and Equipment 3-3
Unpacking and Positioning the Router 3-3
Removing the Front Cover from Router 3-4
Rack-Mounting the Router Chassis 3-6
Verifying Rack Dimensions 3-6
Installing Center-Mount Brackets—Optional 3-7
Installing the Chassis Rack-Mounting Platform 3-11
Unpack and Position the Router 3-13
Installing the Chassis into the Rack 3-14
Supplemental Bonding and Grounding Connections 3-19
Connecting to the Front Grounding Receptacle 3-20
Connecting to the Top Rear Receptacle 3-22
Attaching the Vertical Cable-Management Trough 3-23
Connecting Line Card Network Interface Cables 3-25
Connecting PRP Route Processor Cables 3-29
Connecting to the PRP Console Port 3-30
Connecting to the PRP Auxiliary Port 3-31
Connecting to the PRP Ethernet Ports 3-31
Connecting an Alarm Card Cable 3-33
Connecting Power to the Power Shelf 3-34
Connecting Power to the AC-Input Power Shelf 3-34
Connecting Power to the DC-Input Power Shelf 3-35
Installing the Front Covers 3-39

CHAPTER 4 **Troubleshooting the Installation 4-1**

Troubleshooting Overview 4-2
Troubleshooting Using a Subsystem Approach 4-2
Normal Router Startup Sequence 4-3
Identifying Startup Issues 4-4
Troubleshooting the Power Subsystem 4-5
Troubleshooting an AC Power Supply 4-5
Troubleshooting an AC Power Shelf Installation 4-9
Troubleshooting a DC Power Supply 4-10
Troubleshooting a DC Power Shelf Installation 4-13
Additional Power Subsystem Troubleshooting Information 4-13
Troubleshooting the Power Distribution System 4-15
Troubleshooting the Processor Subsystem 4-16
Troubleshooting the RP 4-17

Troubleshooting Using the RP Alphanumeric Display 4-18
Troubleshooting the Line Cards 4-26
Troubleshooting Using the Alarm Cards 4-27
Monitoring Critical, Major, and Minor Alarm Status 4-28
Troubleshooting the Switch Fabric 4-29
Analyzing the Data 4-30
crc16 Output 4-30
Grant Parity and Request Errors 4-33
Properly Seating Switch Fabric Cards 4-34
Troubleshooting the Cooling Subsystem 4-34
Blower Module Operation 4-36
Power Supply Operation 4-36
Overtemperature Conditions 4-37
Isolating Cooling Subsystem Problems 4-37

CHAPTER 5 **Maintaining the Router** 5-1
Prerequisites and Preparation 5-2
Powering Off the Router 5-2
Removing and Installing Front Doors 5-3
Cleaning or Replacing the Chassis Air Filter 5-7
Removing and Replacing Blower Modules 5-10
Upper and Lower Blower Module Orientation 5-11
Removing and Replacing AC and DC Power Subsystem Components 5-14
Removing and Replacing an AC Power Supply 5-14
Removing and Replacing the Standard AC-Input Power Shelf 5-19
Removing and Replacing the Optional 2-Level AC-Input Power Shelf 5-24
Upgrading to the Optional AC Power Shelf 5-30
Removing and Replacing a DC PEM 5-31
Removing and Replacing the DC Power Shelf 5-37
Removing and Replacing Cards from the Chassis 5-46
Removing and Replacing RP and Line Cards from the Upper and Lower Card Cages 5-46
Removing and Replacing an Alarm Card 5-48
Removing and Replacing Switch Fabric Cards 5-51
Removing and Installing a Chassis 5-53
Preparing the Replacement Chassis 5-54
Preparing the Installed Chassis for Removal 5-54
Removing and Installing System Components 5-55
Removing the Chassis from the Equipment Rack 5-56

Installing the Replacement Chassis 5-61
Removing and Replacing a Power Bus Board Fuse 5-61
Upgrading a Cisco 12000 Series Router to a Cisco XR 12000 Series Router 5-63

APPENDIX A **Technical Specifications** A-1
Router Specifications A-1
Compliance and Safety Information A-5

APPENDIX B **Site Log** B-1

INDEX

Preface

This preface describes the objectives and organization of this document and explains how to find additional information on related products and services. This preface contains the following sections: .

The preface contains the following sections:

- Changes to This Document
- Audience
- Document Organization
- Document Conventions
- Obtaining Documentation and Submitting a Service Request

Changes to This Document

Table 1 lists the technical changes made to this document since it was first printed.

Table 1 Changes to This Document

Revision	Date	Change Summary
OL-17440-01	March 2009	Added Performance Route Processor-3 (PRP-3) related hardware details. PRP-3 has been introduced in Cisco IOS XR Software Release 3.8.0. PRP-3 will be supported on Cisco IOS XR Software Release 3.8.0 and later releases.

Audience

The *Cisco XR 12416 and Cisco XR 12816 Router Chassis Installation Guide* is written for hardware installers and system administrators of Cisco routers.

This publication assumes that the user has a substantial background in installing and configuring router and switch-based hardware. The reader should also be familiar with electronic circuitry and wiring practices, and have experience as an electronic or electromechanical technician.

This installation guide contains procedures for installing the router hardware.

Document Organization

This installation and configuration guide is organized into the following chapters and appendixes:

- Chapter 1, "Product Overview," provides an introduction to the router with a description of system components.
- Chapter 2, "Preparing for Installation," describes safety considerations, tools required, an overview of the installation, and procedures you should perform before the actual installation.
- Chapter 3, "Installing the Router," provides instructions for installing the hardware and connecting the external network interface cables.
- Chapter 4, "Troubleshooting the Installation," provides guidelines for troubleshooting the hardware installation.
- Chapter 5, "Maintaining the Router," provides simple maintenance procedures that you might need to perform after you have installed the router. Also included are removal and replacement procedures for the field-replaceable units.
- Appendix A, "Technical Specifications" provides a summary of physical, electrical, and environmental specifications for the router.
- Appendix B, "Site Log," provides a sample site log that can be used to record actions relevant to the operation and maintenance of the router.
- Index

Document Conventions

This publication uses the following conventions:

- **Ctrl** represents the key labeled *Control*. For example, the key combination **Ctrl-Z** means hold down the **Control** key while you press the **z** key.

Command descriptions use these conventions:

- Examples that contain system prompts denote interactive sessions, indicating the commands that you should enter at the prompt. The system prompt indicates the current level of the EXEC command interpreter.

  For example:

  - The `router>` prompt indicates that you should be at the *user* level.
  - The `router#` prompt indicates that you should be at the *privileged* level.

    Access to the privileged level usually requires a password. Refer to the related software configuration and reference documentation for additional information.

- Commands and keywords are in **bold** font.
- Arguments for which you supply values are in *italic* font.
- Elements in square brackets ([ ]) are optional.
- Alternative but required keywords are grouped in braces ({ }) and separated by vertical bars (|).

Examples use these conventions:

- Terminal sessions and sample console screen displays are in `screen` font.
- Information you enter is in **bold** font.
- Nonprinting characters, such as passwords, are in angle brackets (< >).
- Default responses to system prompts are in square brackets ([ ]).
- Exclamation points (!) at the beginning of a line indicate a comment line.

Caution Means *reader be careful*. You are capable of doing something that might result in equipment damage or loss of data.

Note Means *reader take note*. Notes contain helpful suggestions or references to materials not contained in this manual.

Timesaver Means *the described action saves time*. You can save time by performing the action described in the paragraph.

Warning **This warning symbol means *danger*. You are in a situation that could cause bodily injury. Before you work on any equipment, be aware of the hazards involved with electrical circuitry and be familiar with standard practices for preventing accidents. To see translations of the warnings that appear in this publication, refer to the *Regulatory Compliance and Safety Information* document that accompanied this device.**

Obtaining Documentation and Submitting a Service Request

For information on obtaining documentation, submitting a service request, and gathering additional information, see the monthly *What's New in Cisco Product Documentation*, which also lists all new and revised Cisco technical documentation, at:

http://www.cisco.com/en/US/docs/general/whatsnew/whatsnew.html

Subscribe to the *What's New in Cisco Product Documentation* as a Really Simple Syndication (RSS) feed and set content to be delivered directly to your desktop using a reader application. The RSS feeds are a free service and Cisco currently supports RSS version 2.0.

CHAPTER 1

Product Overview

This chapter provides an overview of the Cisco XR 12416 and Cisco XR 12816 Router. It contains physical descriptions of the router hardware and major components, as well as functional descriptions of the hardware-related features.

Physical and Functional Description of Router

The Cisco XR 12416 and Cisco XR 12816 Router chassis is a sheet-metal enclosure that houses router components. The major components consist of three power supplies, upper and lower line card cages, a switch fabric card cage, and upper and lower blower modules. Power is distributed to these components over the chassis backplane.

All router models contain the following major components (Figure 1-1):

- Power shelf and power supplies—Three AC or DC power entry modules (PEMs) provide power to the router. See the "AC and DC Power Subsystems" section on page 1-4 for additional information.
- Upper blower module—Supplies cooling air to the upper half of the router so it does not overheat. See the "Blower Module" section on page 1-36 for additional information.
- Upper and lower cable management brackets—Used to neatly route line card cables. See the "Upper and Lower Cable Management Brackets" section on page 1-36 for additional information.

- Upper Line card and Route Processor card cage—Has 8 user-configurable slots that support a combination of line cards, a route processor (RP), and an alarm card. See the "Alarm Card and Line Card Overview" section on page 1-18 for additional information.
- Switch fabric card cage—Located behind the air filter door, this card cage contains 5 slots for the switch fabric card set. The switch fabric card set is made up of 3 switch fabric cards (SFCs) and 2 clock scheduler cards (CSCs). See the "Switch Fabric Overview" section on page 1-16 for additional information.
- Lower Line card and Route Processor card cage—Has 8 user-configurable slots that support a combination of line cards, a redundant route processor (RP), and an alarm card. See the "Alarm Card and Line Card Overview" section on page 1-18 for additional information.
- Lower blower module—Supplies cooling air to the lower half of the router so it does not overheat. See the "Blower Module" section on page 1-36 for additional information.
- Chassis backplane (not shown)—Distributes power to card cages and to the blower modules.

Figure 1-1 Cisco XR 12016 Router Components—Front View

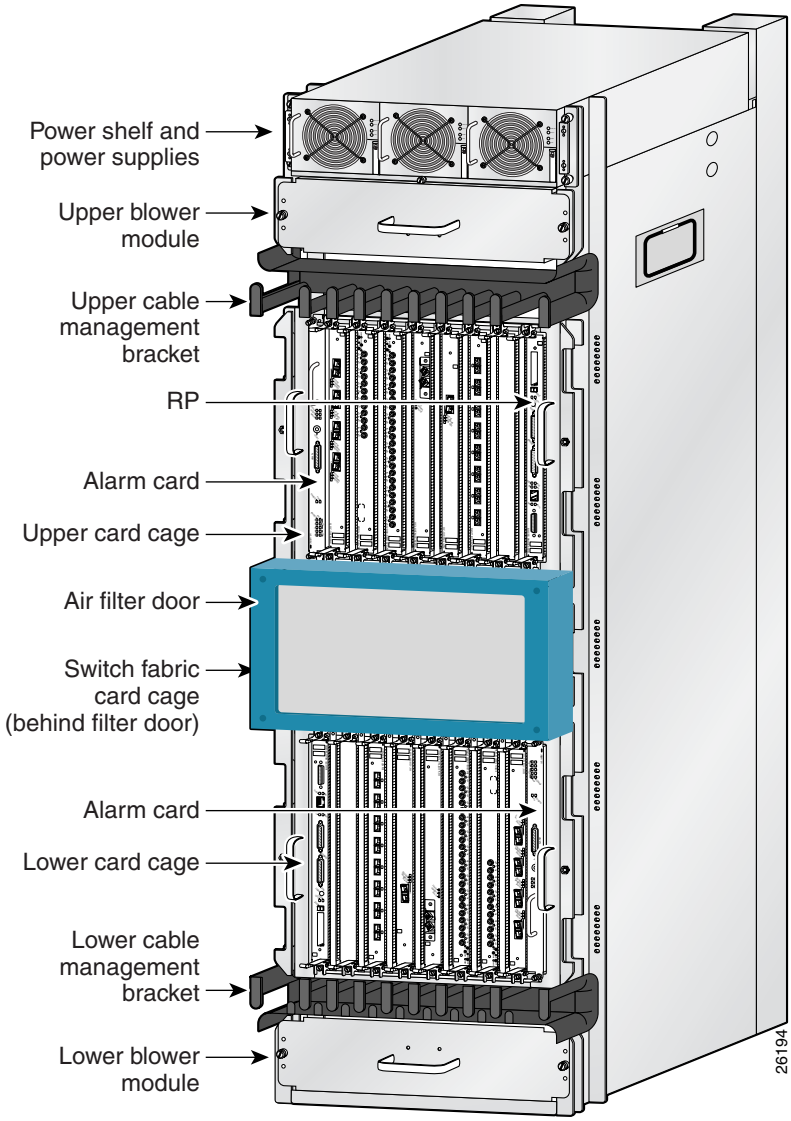

AC and DC Power Subsystems

A router ships with either an AC or DC powered system. Source power connects to the power shelf at the back of the chassis which route power to the power supplies, also referred to as power entry modules (PEMs).

Standard AC Power Shelf

The standard AC-input power subsystem consists of a single-level AC-input power shelf that house three AC power supplies which supply full redundant power to the router.

The power supplies participate in an N+1 redundant current-sharing scheme that is divided among all three power supplies. If one power supply fails, the system can continue to operate temporarily, (depending on your system configuration) with the remaining two power supplies. Failed power supplies should be replaced as soon as possible to ensure full redundancy.

Caution To ensure that the chassis configuration complies with the required power budgets, use the on-line power calculator. Failure to properly verify the configuration may result in an unpredictable state if one of the power units fails. Contact your local sales representative for assistance.

Figure 1-2 Standard AC-Input Power Subsystem

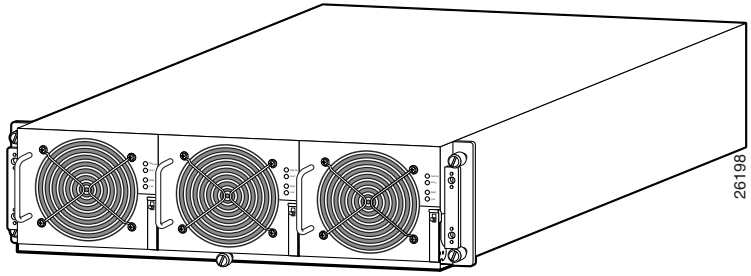

Caution A router equipped with the standard AC power subsystem must be operated with three power supplies installed in the power shelf at all times for electromagnetic compatibility (EMC).

AC power to the router is provided through power cords connected from AC power outlets to connectors on back of the power shelf as shown in Figure 1-3.

Figure 1-3 Standard Power Shelf AC-Input Connections

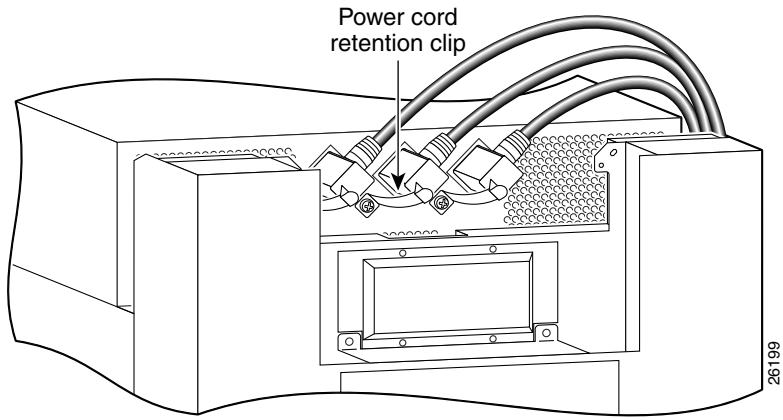

Optional AC Power Shelf

The power subsystem consists of a double-level AC-input power shelf with bays for 4 AC-input power supplies. Figure 1-4 shows the optional power shelf. It attaches to the top of the router chassis and is secured to the chassis the same way as the standard AC-input power shelf.

Note A router equipped with the optional AC-input power subsystem stands 77.5 inches (196.85 cm) tall and does not fit in a standard 7-foot (2.1 m) rack.

The 4 power supplies in the optional power shelf participate in an N+2 redundant current-sharing scheme in which current sharing is divided among all 4 power supplies. Up to two power supplies can fail and the system can continue to operate temporarily, (depending on your system configuration) using the remaining two power supplies. Failed supplies should be replaced as soon as possible to ensure full redundancy.

Caution To ensure that the chassis configuration complies with the required power budgets, use the on-line power calculator. Failure to properly verify the configuration may result in an unpredictable state if one of the power units fails. Contact your local sales representative for assistance.

Figure 1-4 Optional AC-Input Power Subsystem

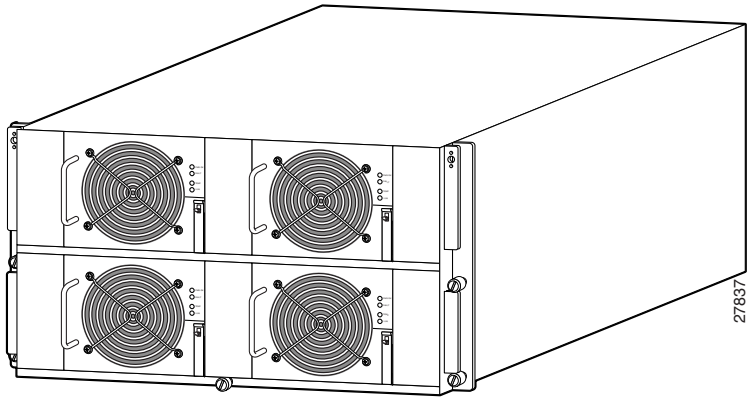

Caution A router equipped with the optional AC power subsystem must be operated with 4 power supplies installed in the power shelf at all times for electromagnetic compatibility (EMC).

AC power to the router is provided through power cords connected from AC power outlets to the connectors on the back of the power shelf as shown in Figure 1-5.

Figure 1-5 Optional Power Shelf AC-Input Connections

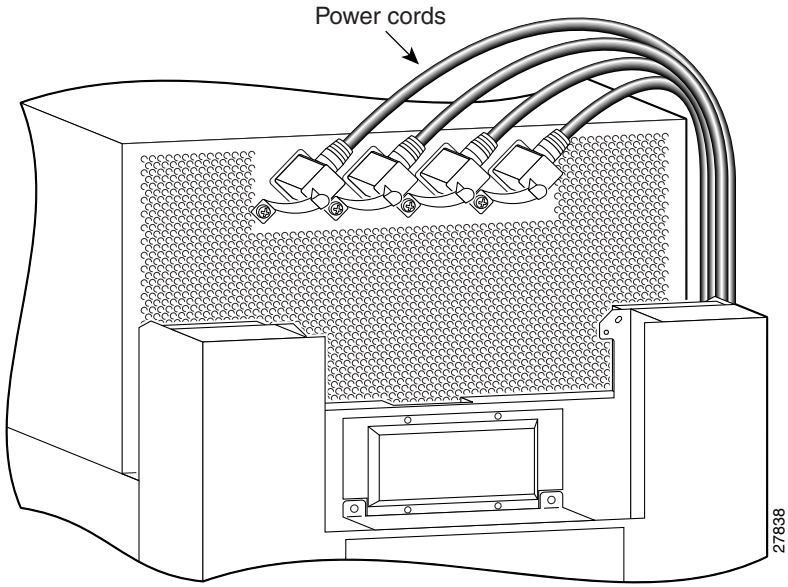

AC Power Supplies

Each AC PEM converts 200 to 240 VAC into -48 VDC, which is distributed through the chassis backplane to all cards, RPs, and the blower modules.

Figure 1-6 identifies the components of a 2500 W AC power supply.

Figure 1-6 2500 W AC Power Supply Components

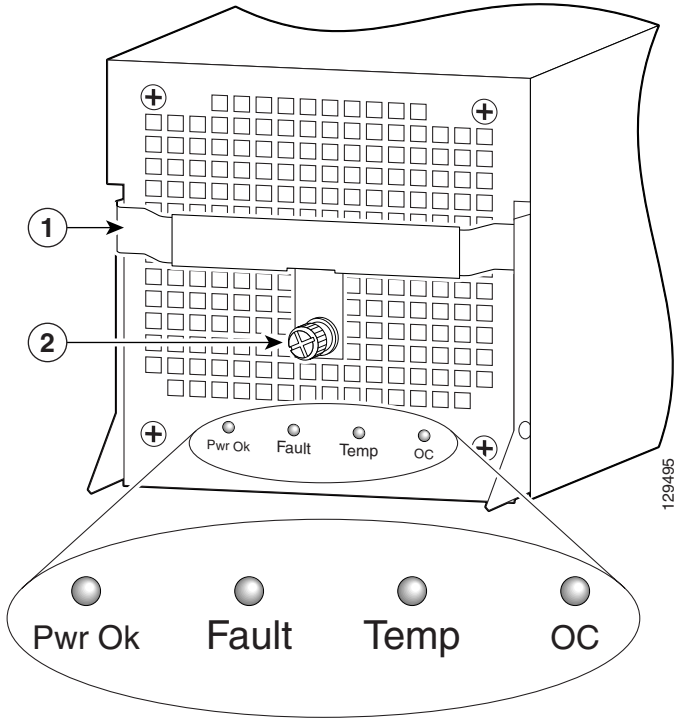

1	Ejector handle	**2**	Captive screw

The status LEDs on an AC PEM provide information about the current operational status of the power supply:

- PWR OK (green)—Indicates that the power supply module is operating normally.
- FAULT (yellow)—Indicates that a fault is detected within the PEM.
- TEMP (yellow)—Indicates the PEM is in an overtemperature condition and shutdown has occurred.
- ILMI (yellow)—Indicates the PEM is operating in a current-limiting condition.

For additional information about troubleshooting AC PEMs, see the "Troubleshooting an AC Power Supply" section on page 4-5.

DC Power Shelf

A DC-input power subsystem consists of a DC-input power shelf that houses 4 DC PEMs that provide full redundant power to the router. Figure 1-7 shows a DC-input power shelf.

The chassis is electrically divided between the PEMS. These sections are referred to as power zones and are labeled accordingly:

- Two PEMs power the upper card cage (Zone 1)
- Two PEMs power the lower card cage (Zone 2)

Each zone provides power to one blower, one alarm card, line cards and route processor cards.

Zone 2 also supplies power to all switch fabric cards. The result is that there is less power available for line cards in Zone 2, limiting the number of high-powered line cards that can be configured in the lower cage.

Caution To ensure that the chassis configuration complies with the required power budgets, contact your sales representative to provide you with the required power calculator. Failure to properly verify the configuration may result in an unpredictable state if one of the power units fails.

Contact your local sales representative for assistance.

In the DC-input power configuration:

- Modules A1 and B1 provide redundant power for system load zone 1 (the upper blower module and the upper card cage).
- Modules A2 and B2 provide redundant power for system load zone 2 (the switch fabric card cage, the lower card cage, and the lower blower module).

Figure 1-7 DC-Input Power Shelf

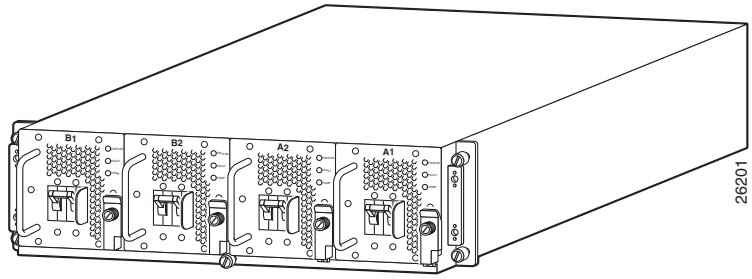

Caution A router configured for source DC operation must be operated with 4 DC-input PEMs installed at all times for electromagnetic compatibility (EMC).

Note DC PEMs support online insertion and removal (OIR) which means that you can remove and replace one PEM in each load zone (A1 or B1; A2 or B2) while the system remains powered on.

DC power to the router is provided from cables from a DC power source that are connected to threaded terminal studs on the back of the DC-input power shelf as shown in Figure 1-8.

Figure 1-8 DC-Input Power Shelf Connections

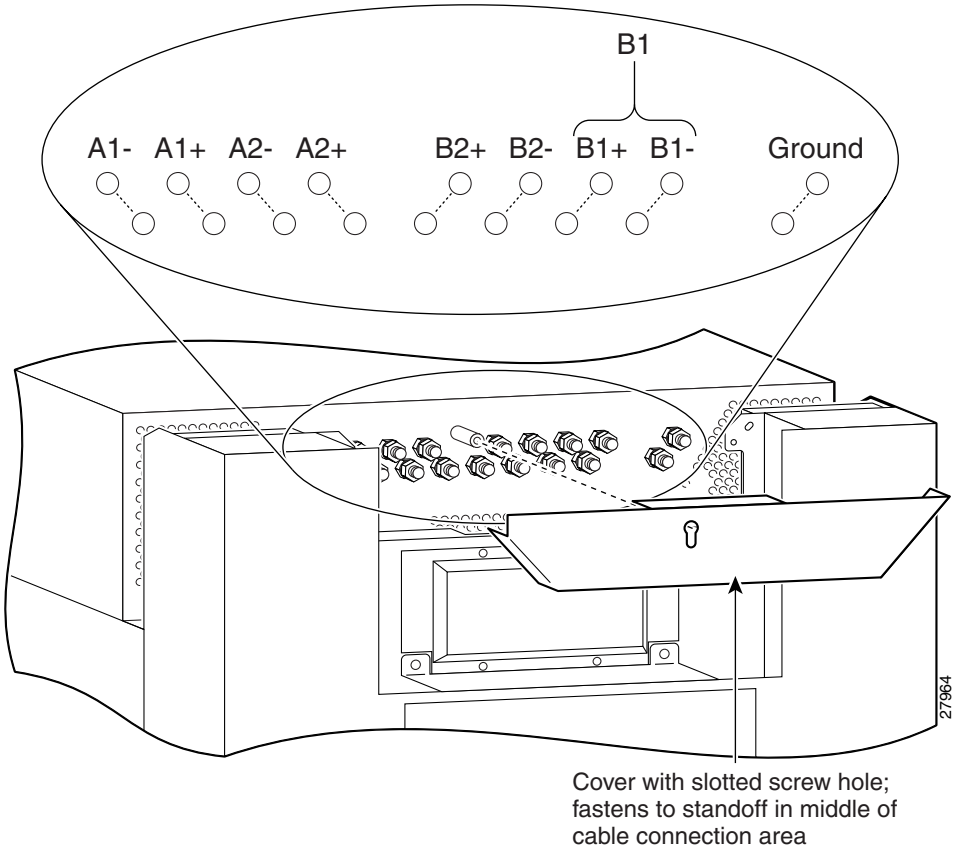

DC Power Supplies

Each DC PEM operates from a nominal source DC voltage of –48 to –60 VDC and requires a dedicated 60 amp service.

Figure 1-9 identifies the components of a 2400 W DC power supply.

Figure 1-9 2400 W DC Power Supply Components

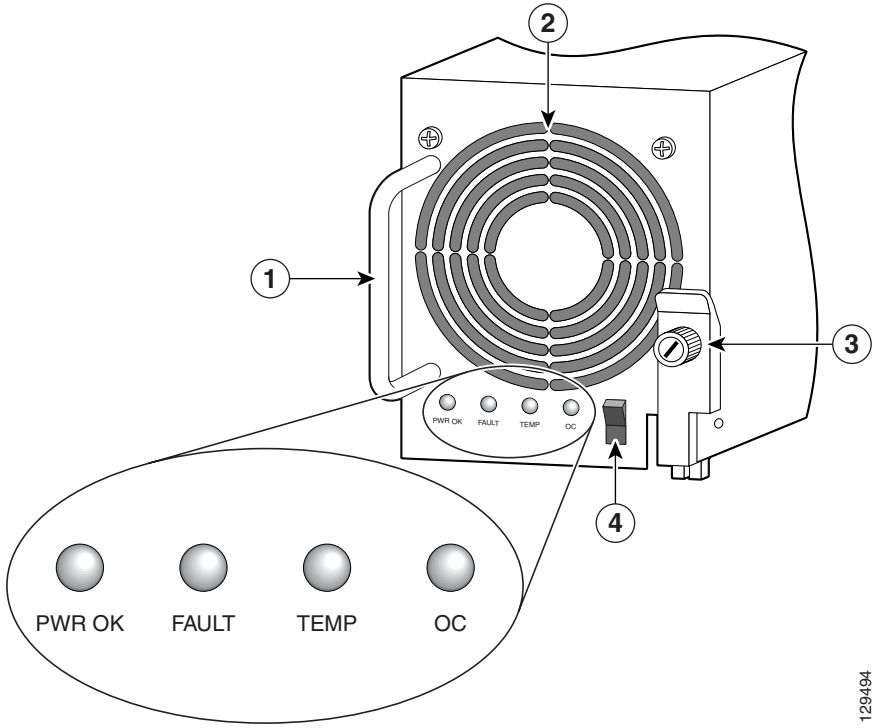

1	Handle	**3**	Ejector lever
2	Fan	**4**	Power switch

The status LEDs on a DC PEM provide information about the current operational status of the power supply:

- PWR OK (green)—Indicates that the power supply module is operating normally.
- FAULT (yellow)—Indicates that a fault is detected within the PEM.
- TEMP (yellow)—Indicates the PEM is in an overtemperature condition and shutdown has occurred.

For additional information about troubleshooting DC PEMs, see the "Troubleshooting a DC Power Supply" section on page 4-10.

Chassis Card Cages

There are three integral card cages in the chassis: the upper card cage, the lower card cage, and the switch fabric card cage (see Figure 1-1).

Upper Card Cage

The upper card cage has eight user-configurable slots that support a combination of line cards, an alarm card, and an RP.

- Alarm—The far *left* slot is a dedicated slot for an alarm card.
- Slots 0 through 6—Can be populated with any line cards supported by the router.
- Slot 7—The far *right* slot is reserved for the RP.

Lower Card Cage

The lower card cage also has eight user-configurable slots that support additional line cards, an alarm card, and an optional, redundant RP.

Note The lower card cage is an inverted, or *head-down,* copy of the upper card cage, which means that cards are installed in an inverted or head-down orientation. The orientation of the slots is opposite that of the upper card cage.

- Slot 8—The far *left* slot is reserved for an optional redundant RP.

Note This slot may be used for a line card if you are not using an redundant RP.

- Slots 9 through 15—Can be populated with any line cards supported by the router.
- Alarm—The far *right* slot is a dedicated slot for an alarm card.

Switch Fabric Card Cage

The router ships from the factory with 2 CSCs and 3 SFCs installed in five of the eight slots in the switch fabric card cage.

- The 2 CSCs are installed in slot 0 (CSC0) or slot 1 (CSC1)
- The 3 SFCs are installed in slot 2 (SFC0), slot 3 (SFC1), and slot 4 (SFC2).
- Three non-working slots with no backplane connectors. These non-working slots are not labeled, but there is a blank filler panel installed in the far left slot to help maintain proper air flow through the chassis.

Caution Do not remove the blank filler panel unless instructed to do so by a Cisco support representative.

Switch Fabric Overview

The switch fabric provides synchronized gigabit-speed connections between line cards and the RP. The switch fabric card cage is located behind the air filter door and consists of 2 clock and scheduler cards (CSCs) and 3 switch fabric cards (SFCs). One CSC and the 3 SFCs are the active switch fabric; the second CSC provides redundancy for the other 4 cards.

Note 10-Gbps switch fabrics do not operate in 1/4-bandwidth mode as they did in some earlier models of the Cisco 12000 series routers. You must have at least one CSC and three SFCs for the system to function. You can add an additional CSC for redundancy.

Each SFC or CSC provides 10-Gbps full-duplex connection to each line card in the system. For example, in a Cisco XR 12416 and Cisco XR 12816 Router with 16 line cards, each with 2 x 10 Gbps capacity (full duplex), the system switching bandwidth is 16x 20 Gbps = 320 Gbps.

Note The Cisco XR 12416 and Cisco XR 12816 Routers support online insertion and removal (OIR), which allows you to remove and replace a card while the router remains powered on.

Switch Fabric Card Functionality

The core of the router is a crossbar switch fabric that provides synchronized connections between the line cards and the RP. The switch fabric consists of 2 clock scheduler cards (CSCs) and 3 switch fabric cards (SFCs) installed in the switch fabric card cage. One CSC and the three SFCs are the active switch fabric; the second CSC provides redundancy for the other 4 cards.

The router also ships with a blank switch fabric card installed in the far left (non-working) slot of the switch fabric card cage. The blank filler panel balances the air flow through the switch fabric card cage which helps maintain proper air flow through the chassis.

Caution Do not remove the blank filler panel unless instructed to do so by a Cisco support representative.

Clock Scheduler Cards

Clock scheduler cards provide the following functionality:

- Scheduler—Handles all scheduling requests from the line cards for access to the switch fabric.
- System clock—Supplies the synchronizing signal to all SFCs, line cards, and the RP. The system clock synchronizes data transfers between line cards or between line cards and the RP through the switch fabric.
- Switch fabric—Carries the user traffic between line cards or between the RP and a line card. The switch fabric on the CSC is identical to the switch fabric on the SFC.

The second CSC provides redundancy for the data path, scheduler, and reference clock. Traffic between the line cards and the switch fabric is monitored constantly. If the system detects a loss of synchronization (LOS), it automatically activates the data paths on the redundant CSC so data flows across the redundant paths. The switch to the redundant CSC occurs within sub-seconds (the actual switch time depends on your configuration and its scale).

Switch Fabric Cards

The switch fabric cards augment the traffic capacity of the router. SFCs contain switch fabric circuitry that can only carry user traffic between line cards or between the RP and the line cards. SFCs receive all scheduling information and the system clock signal from the CSCs.

Alarm Card and Line Card Overview

This section provides general information about alarm cards, line cards and types of route processors installed in the router.

Note The Cisco XR 12416 and Cisco XR 12816 Router supports online insertion and removal (OIR), which allows you to remove and replace a card while the router remains powered on.

Alarm Cards

The router is equipped with 2 alarm cards:

- One alarm card occupies the dedicated far left slot of the upper card cage.
- The other alarm card occupies the dedicated far right slot of the lower card cage.

The alarm card slots differ from the rest of the card cage slots in that it is labeled as an “alarm” card slot, is physically narrower than the other slots, and has a different backplane connector.

Some of the functions that the alarm cards provide are:

- Supplies +5 VDC to the MBus modules on router components (see AC and DC Power Subsystems, page 1-4).
- Displays alarm severity levels (critical, major, and minor) detected by the system through the MBus.
- Provides connections for an external alarm system.
- Displays the status of the alarm cards, clock scheduler cards, and switch fabric cards.

The following components and LEDs are on the front panel of the alarm card (Figure 1-10):

- Critical, Major, and Minor LEDs that identify system level alarm conditions.
- A switch to shut off an audio alarm.
- Cable connection for an external alarm (labeled Alarm)
- Alarm card LEDs:

  - ENABLED (green)—The alarm card is operational and functioning properly.
  - FAIL (yellow)—The alarm card in that slot is faulty.
- A pair of status LEDs that correspond to each of the 5 card slots in the switch fabric card cage (2 CSCs and 3 SFCs):
  - ENABLED (green)
    On—The card installed in that slot is operational and functioning properly.
    Off—Either the slot is empty or the card installed in that slot is faulty.
  - FAIL (yellow)—The card in that slot is faulty.

Figure 1-10 Alarm Card Components and LEDs

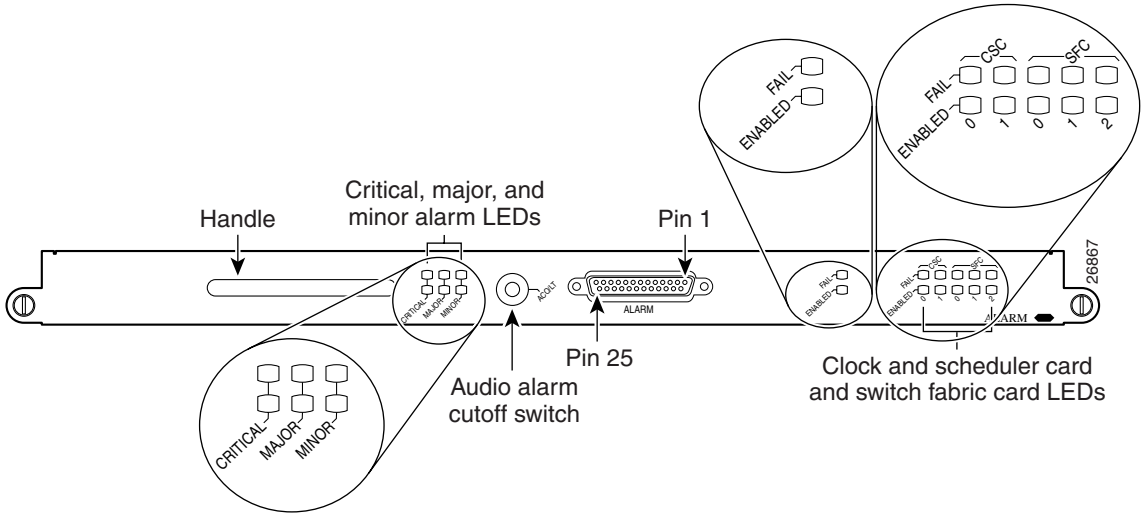

Line Cards

Up to 15 Cisco XR 12416 and Cisco XR 12816 Router line cards can be installed in the routers upper and lower card cages to support a variety of physical network media. Ports and connectors on the line card front panels provide interfaces for external connections. Line cards communicate with the RP and exchange packet data with each other through the switch fabric cards.

Caution Any unoccupied card slot in the upper and lower card cages must have a blank filler panel installed to meet electromagnetic compatibility (EMC) requirements and to ensure proper air flow through the chassis. Also, if the front panel of a line card does not completely fill the card slot opening, a narrow card filler panel must be installed to meet the EMC requirements.

A cable management bracket on the front panel of each line card helps to organize the interface cables connected to that line card.

The following line cards, SIPs, and SPAs are supported on the Cisco XR 12416 and Cisco XR 12816 Routers:

Note Refer to the current s software release notes for the most up-to-date list of supported line cards (see "Obtaining Documentation and Submitting a Service Request" section on page -xiv).

Route Processor

The route processor for the Cisco XR 12416 and Cisco XR 12816 Router is the Performance Route Processor (PRP-2). For detailed information about the PRP-2, refer to the Cisco document, *Performance Route Processor Installation and Configuration Guide*.

The PRP-2 performs the following primary functions:

- Executes routing protocol stacks
- Performs all protocol communications with other routers
- Builds and distributes forwarding information to all line cards

- Uploads the operating system software images to all installed line cards during power-up
- Provides out-of-band system console and auxiliary ports and an Ethernet port for router configuration and maintenance
- Monitors and manages the power and temperature of system components such as line cards, power supplies, and fans

The Cisco PRP-2 and PRP-3 delivers all these functions with enhanced performance and capabilities. It also delivers the following feature enhancements (depending on the software version running):

- 2 Ethernet management ports
- Hard-drive support (optional part)
- BITS input ports
- 1 GB compact image Flash memory support (optional part)
- Memory scalability up to 4 GB with PRP-2 and up to 8 GB with PRP-3.

The PRP-2 and PRP-3 communicates with the line cards either through the switch fabric or through the MBus. The switch fabric connection is the main data path for routing table distribution as well as for packets that are sent between the line cards and the PRP. The MBus connection allows the PRP-2 and PRP-3 to download a system bootstrap image, collect or load diagnostic information, and perform general, internal system maintenance operations.

The PRP-2 can be designated as either the Designated System Controller (DSC) or the Secure Domain router (SDR).

The Designated System Controller (DSC) performs the following functions:

- Implements control plane operations for the chassis
- Monitors temperature and voltage
- Monitors line cards
- On boot up, the first card to become active is designated as the DSC.

The Secure Domain Router (SDR) controls domain security features independent of any other SDRs on the network.

In addition to the functionality listed for the PRP-2, PRP-3 provides the following specific functions:

- Reduced boot time.

- Increased overall scalability.
- Improved memory access rates and scale.
- Improved CPU performance through dual 1.3-GHz PPC processor cores.
- Improved packet processing using hardware-based acceleration.
- 10-G bandwidth backplane connectivity.
- Support for all 124*xx* and 128*xx* chassis, except low–speed fabric (2.5 G).
- New ROMMON that supports IPv4 network configuration directly.

Performance Route Processor Overview

The performance route processor (PRP-2) uses a Motorola PowerPC 7457 CPU that runs at an external bus clock speed of 133 MHz and has an internal clock speed of 1.3 GHz.

Figure 1-11 identifies the slots, ports, and LEDs on the PRP front panel.

Figure 1-11 Performance Route Processor-2 (PRP-2) Front Panel

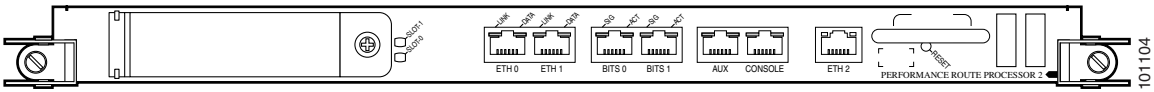

Table 1-1 Performance Route Processor-2 (PRP-2) Front Panel Hardware Components

1	PCMCIA flash disk slots (shown with cover in place) and slot LEDs	**4**	Console serial port
2	RJ-45 Ethernet ports and data status LEDs	**5**	Reset button
3	Auxiliary serial port	**6**	Alphanumeric messages

Figure 1-12 Performance Route Processor 3 (PRP-3) Front Panel

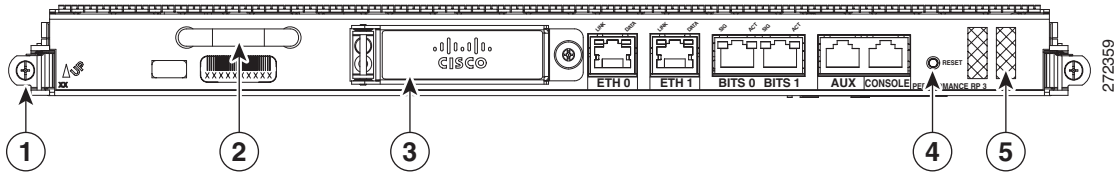

Table 1-2 PRP-3 Front Panel Hardware Components Detail

Numeric Callout	Hardware Components
1	Ejecter Lever
2	Handle
3	External Compact Flash
4	Reset button
5	Alphanumeric LEDs

PRP-3 is the route processor for the Cisco XR 12404 and 12804 Router chassis running Cisco IOS XR Software Release 3.8.0 or a later release. The PRP-3 is available as product number PRP-3 or PRP-3= for a primary route processor and is available as PRP-3/R for a redundant route processor. PRP-3 has significant improvements over PRP-2. These improvements include increased speed, improved scalability, higher system memory, faster packet processing. Because PRP-3 does not support Cisco IOS, the bootflash memory no longer exists in PRP-3. PRP-3 ROMMON has software intelligence to download a Cisco IOS XR image without the support of bootflash memory.

Note PRP-3 supports Cisco XR 12416 (10 G per slot fabric) and Cisco XR 12816 (40 G per slot fabric) Router chassis only. PRP-3 does not support Cisco XR 12004, 12006, 12010, and 12016 Router chassis (2.5 G low-speed fabric).

PRP PCMCIA Card Slots and Status LEDs

Two PCMCIA card slots (slot 0 and slot 1) provide the PRP with additional flash memory capacity. All combinations of different flash devices are supported by the PRP. You can use ATA flash disks, Type 1 or Type 2 linear flash memory cards, or a combination of the two.

Note The PRP only supports +5.2 VDC flash memory devices. It does *not* support +3.3 VDC PCMCIA devices.

Status LEDs (Slot-0 / Slot-1) indicate when the flash memory card in that slot is accessed (see Figure 1-11). Each slot has an eject button (located behind the cover) to remove a flash card from the slot.

Note PRP-3 does not have PCMCIA slots (slot 0 and slot 1). PRP-3 has an external CompactFlash (disk0:) that replaces the PCMCIA slots.

PRP Ethernet Ports and Status LEDs

The PRP has two 8-pin media-dependent interface (MDI) RJ-45 ports for either IEEE 802.3 10BASE-T (10 Mbps) or IEEE 802.3u 100BASE-TX (100 Mbps) Ethernet connections. These ports are labeled ETH 0 and ETH 1.

The transmission speed of the Ethernet port is not user-configurable. You set the speed through an autosensing scheme on the PRP which is determined by the network that the Ethernet port is connected to. However, even at an autosensed data transmission rate of 100 Mbps, the Ethernet port can only provide a usable bandwidth of substantially less than 100 Mbps. You can expect a maximum usable bandwidth of approximately 20 Mbps when using an Ethernet connection.

The following LEDs on the front panel indicate traffic status and port selection (Figure 1-13):

- LINK, EN, TX, RX—Indicate link activity (LINK), port enabled (EN), data transmission (TX), and data reception (RX).
- PRIMARY—Indicates which Ethernet port is selected (ETH 0 or ETH 1).

Note Because both ports are supported on the PRP, ETH 0 is always on. ETH 1 lights when it is selected.

Figure 1-13 PRP-2 Port Activity LEDs—Partial Front Panel

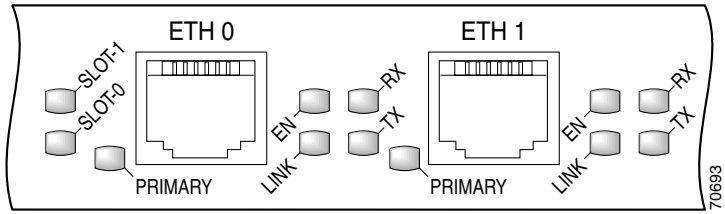

Figure 1-14 PRP-3 Port Activity—Partial Front Panel

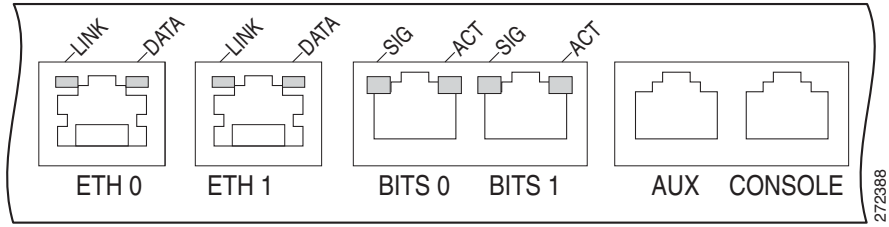

PRP Auxiliary and Console Ports

The auxiliary and console ports on the PRP are EIA/TIA-232 (also known as RS-232) asynchronous serial ports. These ports connect external devices to monitor and manage the system.

- The auxiliary port—A (male) plug that provides a data terminal equipment (DTE) interface. The auxiliary port supports flow control and is often used to connect a modem, a channel service unit (CSU), or other optional equipment for Telnet management.
- The console port—A (female) receptacle that provides a data circuit-terminating equipment (DCE) interface for connecting a console terminal.

PRP-3 LEDs

The PRP-3 has the following LED indicators:

- Two Ethernet port LEDs used in conjunction with each of the three RJ-45 Ethernet connectors:
  - LINK—Indicates link activity
  - DATA—Indicates data transmission or reception
- Two BITS port LEDs used in conjunction with each of the two BITS ports:
  - SIG—Indicates carrier signal available
  - ACT—Indicates that the interface is active

Note BITS feature is not supported in Release 3.8.0.

- One auxiliary port (AUX) and one console port (CONSOLE) LED:
  - AUX—Used as a backup for the command outputs on the Console.
  - CONSOLE—Used for configuring the router by connecting an RJ-45 cable to the console terminal. The router can be configured through the console terminal.

PRP Reset Switch

Access to the (soft) reset switch is through a small opening in the PRP front panel (see Figure 1-11). To press the switch, insert a paper clip or similar small pointed object into the opening.

Caution The reset switch is *not* a mechanism for resetting the PRP and reloading the Cisco IOS image. It is intended for software development use only. To prevent system problems or loss of data, use the reset switch only on the advice of Cisco service personnel.

Pressing the reset switch causes a nonmaskable interrupt (NMI) and places the PRP in ROM monitor mode. When the PRP enters ROM monitor mode, its behavior depends on the setting of the PRP software configuration register. For example, if the boot field of the software configuration register is set to:

- 0x0—The PRP remains at the ROM monitor prompt (rommon>) and waits for a user command to boot the system manually.
- 0x1—The system automatically boots the first Cisco IOS image found in flash memory on the PRP.

PRP Alphanumeric Message Displays

The alphanumeric message displays are organized in two rows of four LED characters each (Figure 1-15).

Figure 1-15 Alphanumeric Message Displays—Partial Front Panel

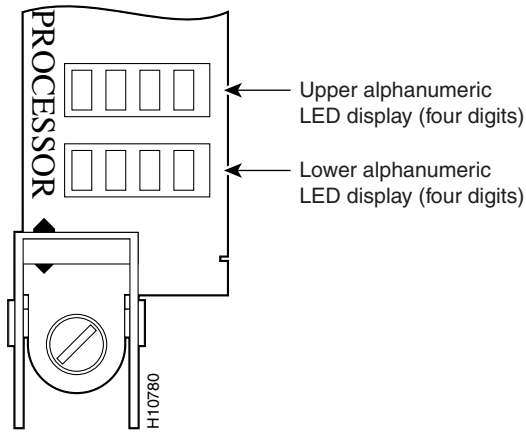

The alphanumeric message displays show router status messages during the boot process, and after the boot process is complete.

- During the boot process, the message displays are controlled directly by the MBus module.
- After the boot process, the message displays are controlled by Cisco IOS XR software (through the MBus).

The alphanumeric messages also provide information about different levels of system operation, including the status of the PRP, router error messages, and user-defined status and error messages

Note A list of all system and error messages appears in the *Cisco IOS System Error Messages* publication (see the "Obtaining Documentation and Submitting a Service Request" section on page -xiv).

PRP Memory Components

This section describes various types of memory used on the PRP to support router functions. Table 1-3 provides a quick reference of the different types of memory, and Figure 1-16 shows the location on the PRP board.

Table 1-3 PRP-2 Memory Components

Type	Size	Quantity	Description	Location
SDRAM[1]	2 GB (default) or 4 GB (optional)	1 or 2	2-GB or 4-GB DIMMs (based on desired SDRAM configuration) for main Cisco IOS XR software functions	U15 (bank 1)[2] U18 (bank 2)
SRAM[3]	2 MB (fixed)	—	Secondary CPU cache memory functions	—
NVRAM[4]	2 MB (fixed)	1	System configuration files, register settings, and logs	—
HDD	40 GB	1	Contains log and crash information for specific Cisco IOS XR versions.	—
Flash memory	2 GB or 4 GB (optional) Compact Flash	1	Contains Cisco IOS XR boot image (bootflash), crash information, and other user-defined files	P3
	4 MB Boot ROM	1	Stores the ROMMON minimum boot image (MBI).	—
	Flash disks[5] 2 GB (default) or 4 GB (optional)	1 or 2	Contains Cisco IOS XR software images, system configuration files, and other user-defined files on up to two flash disks	Flash disk slot 0 and slot 1
	1 GB CF[6]	1	Contains large Cisco IOS XR software images	—

1. Default SDRAM configuration is 2-GB for PRP-2. Bank 1 (U15) must be populated first. You can use one or both banks to configure SDRAM combinations of 2 GB and 4 GB for the PRP-2. 1.5-GB configurations.and DIMM devices that are not from Cisco are not supported.
2. If both banks of the PRP-2 are populated, bank 1 and bank 2 must contain the same size DIMM.
3. SRAM is not user configurable or field replaceable.
4. NVRAM is not user configurable or field replaceable.
5. ATA Flash disks are supported in the PRP-2.
6. Optional PRP-2 hardware. Compact disks that are not from Cisco are not supported.

Figure 1-16 PRP-2 Memory Locations

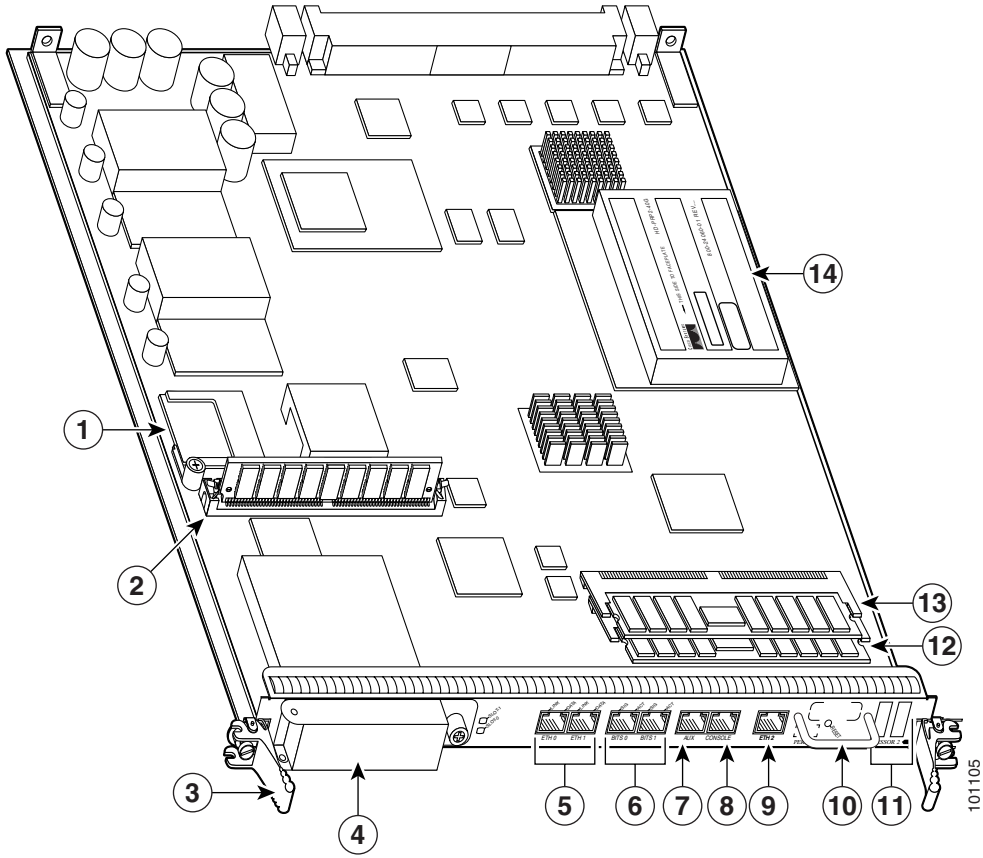

Figure 1-17 PRP-3 Memory Locations

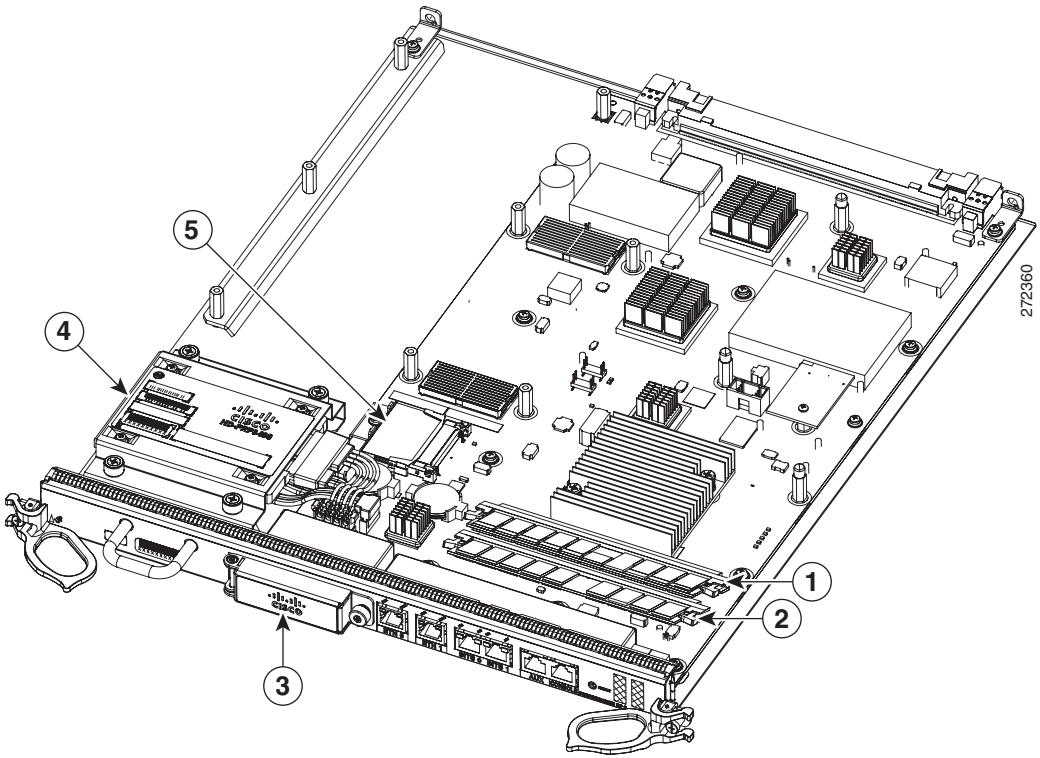

1	SDRAM DIMM: Bank 1 - Socket number U8
2	SDRAM DIMM: Bank 2 - Socket number U10
3	External CompactFlash
4	Hard disk (80 GB)
5	Internal CompactFlash

Table 1-4 PRP-3 Memory Components

Type	Size	Quantity	Description	Location
SDRAM[1]	2 GB (Default) for each DDR2 DRAM for a total system memory of 4 GB, option for upgrade to total system memory of 8 GB (4 GB each).	2	Two 2-GB default DDR2 DRAM for main CiscoIOSXR software functions. Provision for optional upgrade to 4 GB also possible to provide total system memory of 8 GB.	U8 (bank 1)[2] U10 (bank 2)
NVRAM[3]	2 MB (fixed)	1	System configuration files, register settings, and logs	—
Flash memory	2 GB (default) or 4 GB (optional) Flash disks[4]	2 (Internal and External Compact Flash)	Contains Cisco IOS XR software images, system configuration files, and other user-defined files on two CompactFlash.	Internal and External Compact Flash[5]
Flash boot ROM	8 MB	1	Flash EPROM for the ROM monitor program boot image	—
HDD[6]	80 GB SATA	1	Contains log and crash information for specific Cisco IOS XR versions	—

1. Default SDRAM configuration is a total of 4 GB (2 x 2GB) system memory for PRP-3. Bank 1 (U15) must be populated first. You can use one or both banks to configure DDR2 DRAM combinations of 2 GB or 4 GB for the PRP-3. DIMM devices that are not from Cisco are not supported.
2. If both banks of the PRP-3 are populated, bank 1 and bank 2 must contain the same size DIMM.
3. NVRAM is not user configurable or field replaceable.
4. ATA Flash disks are supported in the PRP-3.
5. PRP-3 provides an onboard internal CompactFlash and also an external CompactFlash. The external CompactFlash in PRP-3 replaces the two PCMCIA slots (slot0 and slot1) of PRP-2.
6. Hard disk drives that are not from Cisco are not supported.

PRP SDRAM

The PRP uses Error Checking and Correction (ECC) Synchronized Dynamic Random Access Memory (SDRAM) to store routing tables, protocols, network accounting applications, and to run Cisco IOS software.

Table 1-5 lists the DRAM configurations for the PRP. If you are using:

- One DIMM—Bank 1 (U15) must be populated first.
- Two DIMMs—You cannot mix memory sizes; both banks must contain the same size DIMM.

Table 1-5 PRP-2 DRAM Configurations

Total SDRAM	SDRAM Sockets	Number of DIMMs
2 GB[1]	U15 (bank 1) U18 (bank 2)	One 2 GB DIMM or Two 2 GB DIMMs
4 GB	U15 (bank 1) U18 (bank 2)	One 4 GB DIMM or Two 4 GB DIMMs

1. Default shipping configuration.

Caution DRAM DIMMs must be 3.3-volt, 60-nanosecond devices only. Do not attempt to install other devices in the DIMM sockets. To prevent memory problems, use the Cisco approved memory products listed in Table 1-5.

PRP-3 provides more system memory than PRP-2. PRP-3 is shipped with 2 GB of system memory in each DDR2 DRAMs, for a total of 4 GB and provides an upgrade option for a total of 8 GB (4 GB x 2 DRAM).

Note The two DIMMs must be of the same sizes. Do not use two different DIMM sizes together.

Table 1-6 PRP3 DDR2 DRAM Configuration

Total SDRAM	SDRAM Sockets	Number of DIMMs
4 GB	U8 (bank 1) U10 (bank 2)	Two 2 GB DIMMs
8 GB	U8 (bank 1) U10 (bank 2)	Two 4 GB DIMMs

PRP SRAM

Static Random Access Memory (SRAM) provides 2 MB of secondary CPU cache memory. Its principal function is to act as a staging area for routing table updates, and for information sent to and received from the line cards. SRAM is *not* user-configurable and cannot be upgraded in the field.

PRP NVRAM

Non-volatile Random Access Memory (NVRAM) provides 2 MB of memory for system configuration files, software register settings, and environmental monitoring logs. Built-in lithium batteries retain the contents of NVRAM for a minimum of 5 years. NVRAM is *not* user configurable and cannot be upgraded in the field.

PRP Flash Memory

Use flash memory to store multiple Cisco IOS XR software and microcode images that you can use to operate the router. You can download new images to flash memory over the network (or from a local server) to replace an existing image, or to add it as an additional image. The router can be booted (manually or automatically) from any of the stored images in flash memory.

Flash memory also functions as a Trivial File Transfer Protocol (TFTP) server to allow other servers to boot remotely from the stored images, or to copy them into their own flash memory.

The system uses two types of flash memory:

- Onboard flash memory (called *bootflash)*—Contains the Cisco IOS boot image
- Flash memory disks (or cards)—Contain the Cisco IOS software image

Table 1-7 lists supported flash disk sizes and Cisco part numbers.

Table 1-7 Supported Flash Disk Sizes

Flash Disk Size[1]	Part Number
2 GB[2]	MEM-FD2G=
4 GB	MEM-FD4G=

1. 4 GB is supported with 2 GB mode prior to Release 3.8.0.
2. Default shipping configuration.

PRP-3 Compact Flash

PRP-3 provides more flash memory than PRP-2. PRP-3 uses flash memory to store Cisco IOS XR software images. PRP-3 includes a default internal flash memory of 2 GB and also has an external flash memory of 2 GB. A flash memory upgrade option is also available for a total of 8 GB (2 x 4 GB).

PRP-2 and PRP-3 compactflashes are not compatible with each other and hence PRP-2 compactflash cannot be used in PRP-3 and vice versa. PRP-3 uses Multiword DMA to access the compactflash device, a PRP-2 compactflash does not support this access type.

Note The PRP-3 external CompactFlash disk replaces the two PCMCIA slots of PRP-2. The external CompactFlash disk can be installed or removed from the PRP-3 front panel. The internal CompactFlash disk memory is denoted as compactflash, while the external CompactFlash disk is denoted as disk0:.

Table 1-8 PRP-3 CompactFlash Disk Sizes

Flash Disk Size	Part Numbers
2 GB	FLASH-PRP3-2G(=)
4 GB	FLASH-PRP3-4G(=)

Upper and Lower Cable Management Brackets

The Cisco XR 12416 and Cisco XR 12816 Router includes upper and lower cable management brackets that work together with individual line card cable management brackets to organize interface cables entering and exiting the router (see Figure 1-1).

Network interface cables to the line cards are fed across the brackets, and then through the openings to the individual line card cable management bracket. This system keeps cables out of the way and free of sharp bends.

Caution Excessive bending of interface cables can damage the cables.

Blower Module

The router has two blower modules to distribute air within the chassis. One blower module is located above the upper card cage; the second blower module is located below the lower card cage (see Figure 1-1).

Each blower module contains three variable speed fans and a controller card. The two front cover LEDs provide a visual indication of blower module status (Figure 1-18):

Figure 1-18 Blower Module

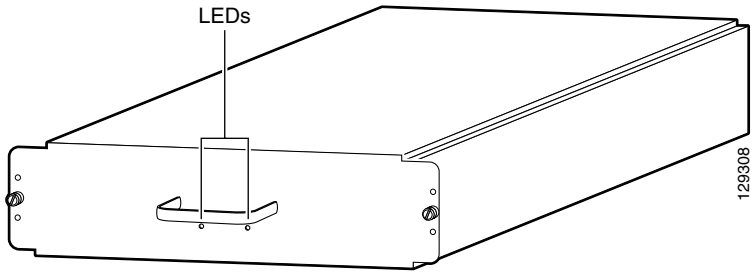

- OK (green)—All three fans are operating normally.
- FAIL (red)—The system has detected a fan failure or other fault in the blower module. The fault can be caused by any of the following:
  - One or more fans are not operating
  - One or more fans are running below speed
  - A controller card fault

The blower modules maintain acceptable operating temperatures for the internal components by drawing cool air through a replaceable air filter into the switch fabric card cage and then through the upper and lower card cages. Figure 1-19 illustrates the air flow path through the chassis.

Figure 1-19 Cooling Air Flow

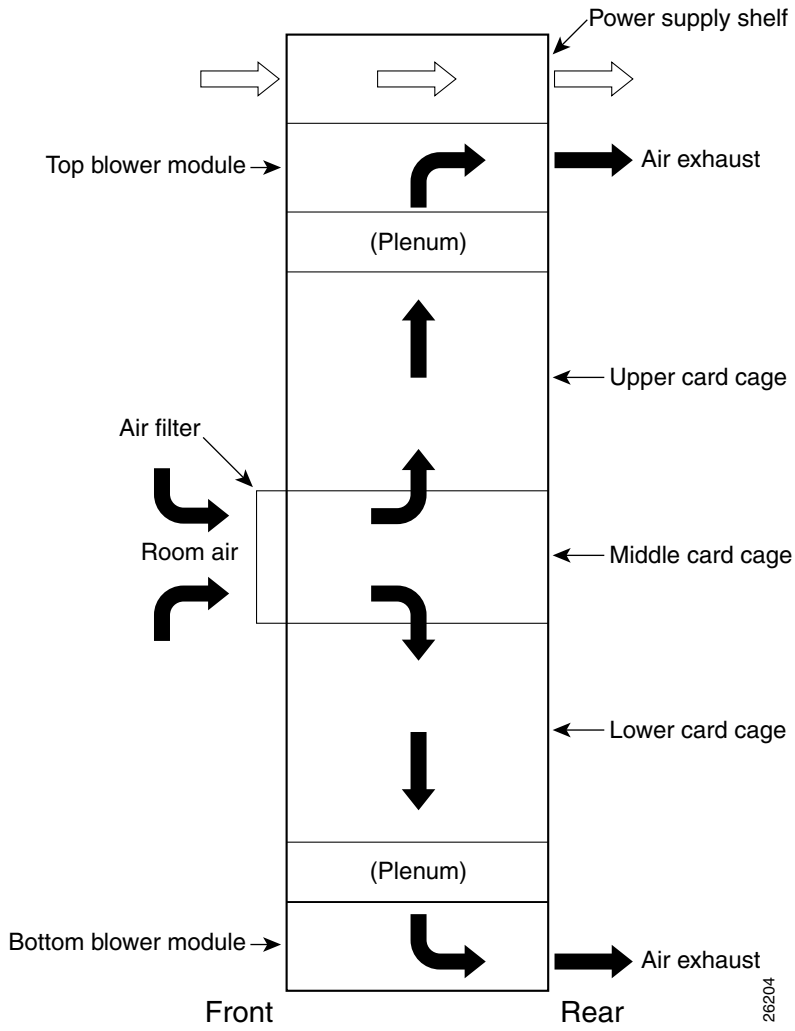

To ensure that there is adequate air flow to prevent overheating inside the card cages keep the front and back of the router unobstructed. We recommend at least 6 inches (15.24 cm) of clearance.

Caution You should inspect and clean the air filter one time per month (more often in dusty environments). Do not operate the router without an air filter installed.

The blower module controller card monitors and controls operation of three variable-speed fans in the blower modules. The variable-speed feature allows quieter operation by running the fans at below maximum speed, while still providing adequate cooling to maintain an acceptable operating temperature inside the card cages.

Two temperature sensors on each line card monitor the internal air temperature in the card cages:

- When the ambient air temperature is within the normal operating range, the fans operate at their lowest speed, which is 55 percent of the maximum speed.
- If the air temperature rises inside the card cages the fan speed increases to provide additional cool air to the cards.
- If the air temperature continues to rise beyond the specified threshold, the system environmental monitor shuts down all internal power to prevent equipment damage due to excessive heat.
- If the system detects that one of the three fans within a blower module has failed, it displays a warning message on the console window. In addition, the two remaining fans go to full speed to compensate for the loss of the one fan. If another fan fails, the system shuts down to prevent equipment damage.

For additional troubleshooting information, see the "Blower Module Operation" section on page 4-36.

CHAPTER 2

Preparing for Installation

Before installing the router, consider power and cabling requirements that must be in place at your installation site, special equipment for installing the router, and the environmental conditions your installation site must meet to maintain normal operation. This chapter guides you through the process of preparing for router installation.

The shipping package for the router is engineered to reduce the chances of product damage associated with routine material handling experienced during shipment.

- The router should always be transported or stored in its shipping package in the upright position.
- Keep the router in the shipping container until you have determined the installation site.

Use the unpacking instructions included with the router to unpack it and inspect all items for shipping damage. If an item appears damaged, contact a Cisco customer service representative immediately.

This chapter contains the following installation topics:

- Safety Guidelines, page 2-2
- Site Requirement Guidelines, page 2-7
- PRP Port Connection Guidelines, page 2-24
- Alarm Card Connection Guidelines, page 2-33

Safety Guidelines

Before you perform any procedure in this publication, review the safety guidelines in this section to avoid injuring yourself or damaging the equipment. In addition, be sure to review the safety warnings listed in the *Regulatory Compliance and Safety Information for Cisco 12000 Series Internet Routers* publication that accompanied your router before you begin router installation.

Note that the information in this section are *guidelines* and do not include every potentially hazardous situation. When you install a router, always use common sense and caution.

Safety with Equipment

- Cisco equipment operates safely when used in accordance with its specifications and product-usage instructions.
- Never install equipment that appears damaged.
- Do not perform any action that creates a potential hazard to people or makes the equipment unsafe.
- Never attempt to lift an object that might be too heavy for you to lift by yourself.
- Do not wear loose clothing, jewelry, or other items that could get caught in the router.
- Keep tools and assembly components away from walk areas.
- Do not work alone if potentially hazardous conditions exist.
- Keep the work area clear and dust-free during and after installation. Do not allow dirt or debris to enter into any laser-based components.

Safety with Electricity

- The installation shall be in compliance with national and local electrical codes: in the United States, National Fire Protection Association (NFPA) 70, United States National Electrical Code; in Canada, Canadian Electrical Code, part I, CSA C22.1; in other countries, International Electrotechnical Commission (IEC) 60364, part 1 through part 7.
- Before you begin any procedures requiring access to the interior of the router, locate the emergency power-off switch for the room in which you are working.
- Disconnect all power source cables before installing or removing a router.
- Never assume that power has been disconnected from a circuit; always check.
- Carefully examine your work area for possible hazards such as moist floors, ungrounded power extension cables, and missing safety grounds.
- Only a DC power source that complies with the safety extra-low voltage (SELV) requirements in UL60950, CSA-C22.2 No. 60950, EN60950, ACATS001, AS/NZS 60950,and IEC60950 can be connected to the line card chassis DC-input power system.
- A line card chassis configured with the DC-input power system shall have a readily accessible two-poled disconnect device incorporated in the fixed wiring.
- The line card chassis requires short-circuit (overcurrent) protection to be provided as part of the building installation.
- If an electrical accident occurs, proceed as follows:
  - Use caution; do not become a victim. Disconnect power to the router.
  - If possible, send another person to get medical aid; otherwise, assess the condition of the victim and then call for help.

Preventing Electrostatic Discharge Damage

Many router components can be damaged by static electricity. Not exercising the proper electrostatic discharge (ESD) precautions can result in intermittent or complete component failures. To minimize the potential for ESD damage, always use an ESD-preventive antistatic wrist strap (or ankle strap) and ensure that it makes good skin contact.

Note Check the resistance value of the ESD-preventive strap periodically. The measurement should be between 1 and 10 megohms.

Before you perform any of the procedures in this guide, attach an ESD-preventive strap to your wrist and connect the leash to the chassis or to another grounded, bare metal surface as shown in Figure 2-1.

Figure 2-1 Connecting an ESD-Preventive Strap to the Router Chassis

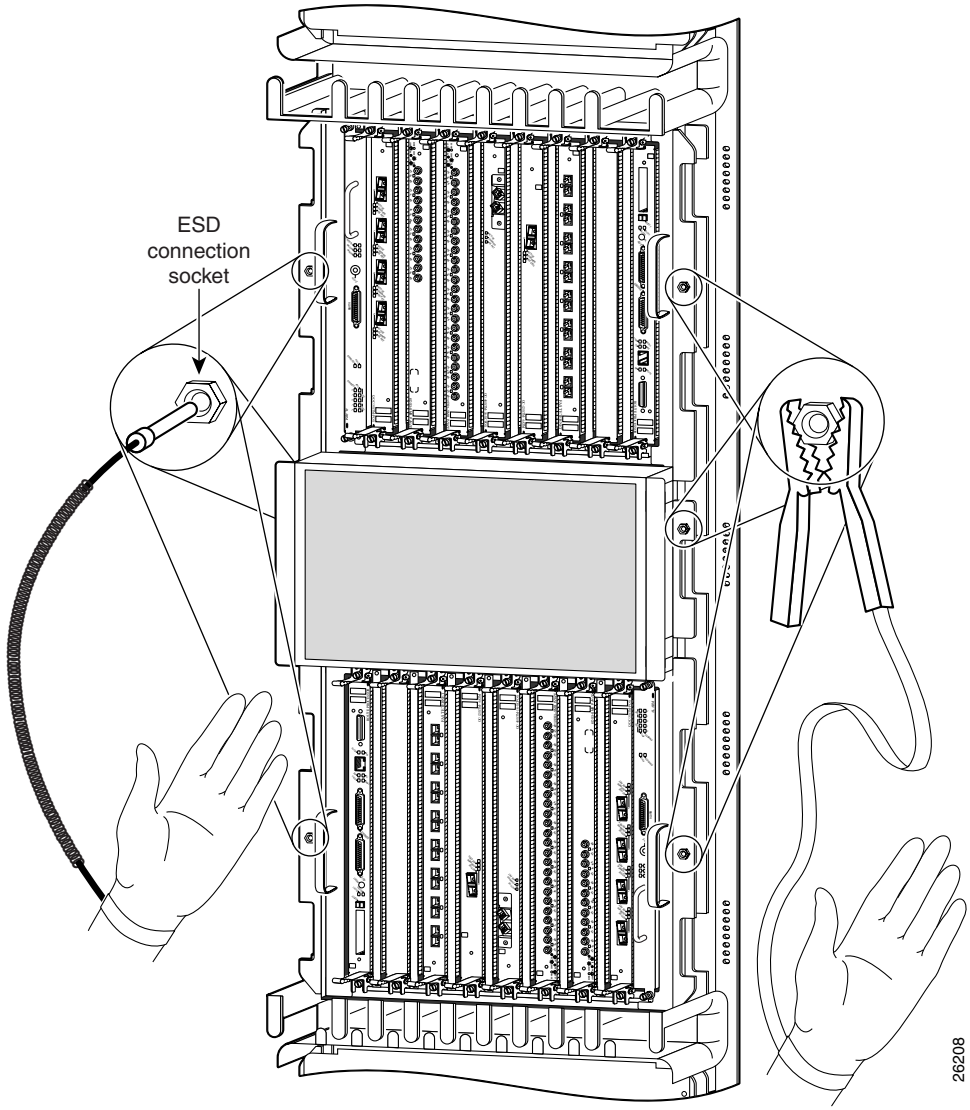

Lifting Guidelines

A fully configured router can weigh as much as 275 pounds (lb) (124.74 kilograms (kg)), while an empty chassis weighs 125 lb (56.7 kg). These systems are not intended to be moved frequently. Before you install the router, ensure that your site is properly prepared so you can avoid having to move the router later to accommodate power sources and network connections.

Use the following lifting guidelines to avoid injury to yourself or damage to the equipment:

- Do not lift equipment alone; have another person help you to lift heavy equipment.
- Ensure that your footing is solid; balance the weight of the object between your feet.
- Lift the equipment slowly; never move suddenly or twist your body as you lift.
- Keep your back straight and lift with your legs, not your back. When bending down to lift equipment, bend at the knees (not at the waist), to reduce the strain on your lower back muscles.

Caution To prevent equipment damage, never attempt to lift or tilt the router chassis using the handles on the blower module or on line cards. These handles do not support the weight of the chassis.

Compliance and Safety Information

The Cisco XR 12416 router is designed to meet the regulatory compliance and safety approval requirements. Refer to the *Regulatory Compliance and Safety Information for the Cisco 12000 Series Router* if you require additional compliance information (see "Obtaining Documentation and Submitting a Service Request" section on page -xiv for site information).

Laser Safety

Some line cards are equipped with ports that can emit hazardous laser radiation from the aperture when there is no cable connected to the port. This invisible radiation can cause eye injury if you stare into the port.

Warning **To avoid eye injury, never stare into open line card ports.**

Site Requirement Guidelines

This section provides the following site requirement guidelines that you must consider before installing the router:

- Rack-Mounting Guidelines, page 2-7
- Air Flow Guidelines, page 2-14
- Temperature and Humidity Guidelines, page 2-16
- Power Connection Guidelines, page 2-16
- NEBS Supplemental Unit Bonding and Grounding Guidelines, page 2-21
- Site Wiring Guidelines, page 2-23

Rack-Mounting Guidelines

The router can be mounted in most 2-post, 4-post, or telco-type 19-inch equipment racks that comply with the Electronics Industries Association (EIA) standard for equipment racks (EIA-310-D). The rack must have at least two posts with mounting flanges to mount the router chassis. The distance between the center lines of the mounting holes on the two mounting posts must be 18.31 inches ± 0.06 inch (46.50 cm ± 0.15 cm). The rack-mounting hardware included with the router is suitable for most 19-inch equipment racks or telco-style frames.

Figure 2-2 shows examples of typical 2-post, 4-post, and telco-type equipment racks.

Figure 2-2 Equipment Rack Types

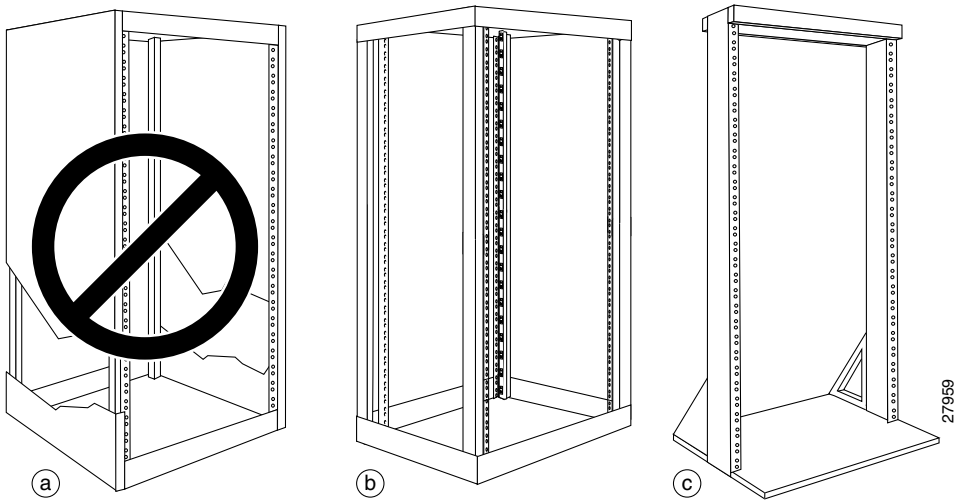

Enclosed Rack

Figure 2-2**a** shows a free-standing, enclosed rack with two mounting posts in the front. The router should *not* be installed in this type of enclosed rack, because the router requires an unobstructed flow of cooling air to maintain acceptable operating temperatures for its internal components. Installing the router in any type of enclosed rack—*even with the front and back doors removed*—could disrupt the air flow, trap heat next to the chassis, and cause an overtemperature condition inside the router.

Open Rack

Figure 2-2**b** shows a free-standing, 4-post open rack with two mounting posts in the front and two mounting posts in the back. The mounting posts in this type of rack are often adjustable so that you can position the rack-mounted unit within the depth of the rack rather than flush-mount with the front of the rack.

Telco Rack

Figure 2-2**c** shows a telco-type rack. The telco-type rack is an open frame consisting of two posts tied together by a cross-bar at the top and a floor stand at the bottom.

This type of rack is usually secured to the floor and sometimes to an overhead structure or wall for additional stability. The router chassis can be installed in the telco-type rack either in a front-mounted position or a center-mounted position (Figure 2-3).

- In the front-mounted position, you secure the chassis rack-mounting brackets directly to the rack posts.
- In the center-mounted position, you secure a set of optional center-mount brackets to the rack posts. The chassis rack-mounting flanges are then secured to the center-mount brackets. The center-mounted position moves the center of gravity of the chassis closer to the vertical axis of the rack posts, which adds to the stability of the rack installation.

Figure 2-3 Front-Mounted and Center-Mounted Installation in a Telco Rack

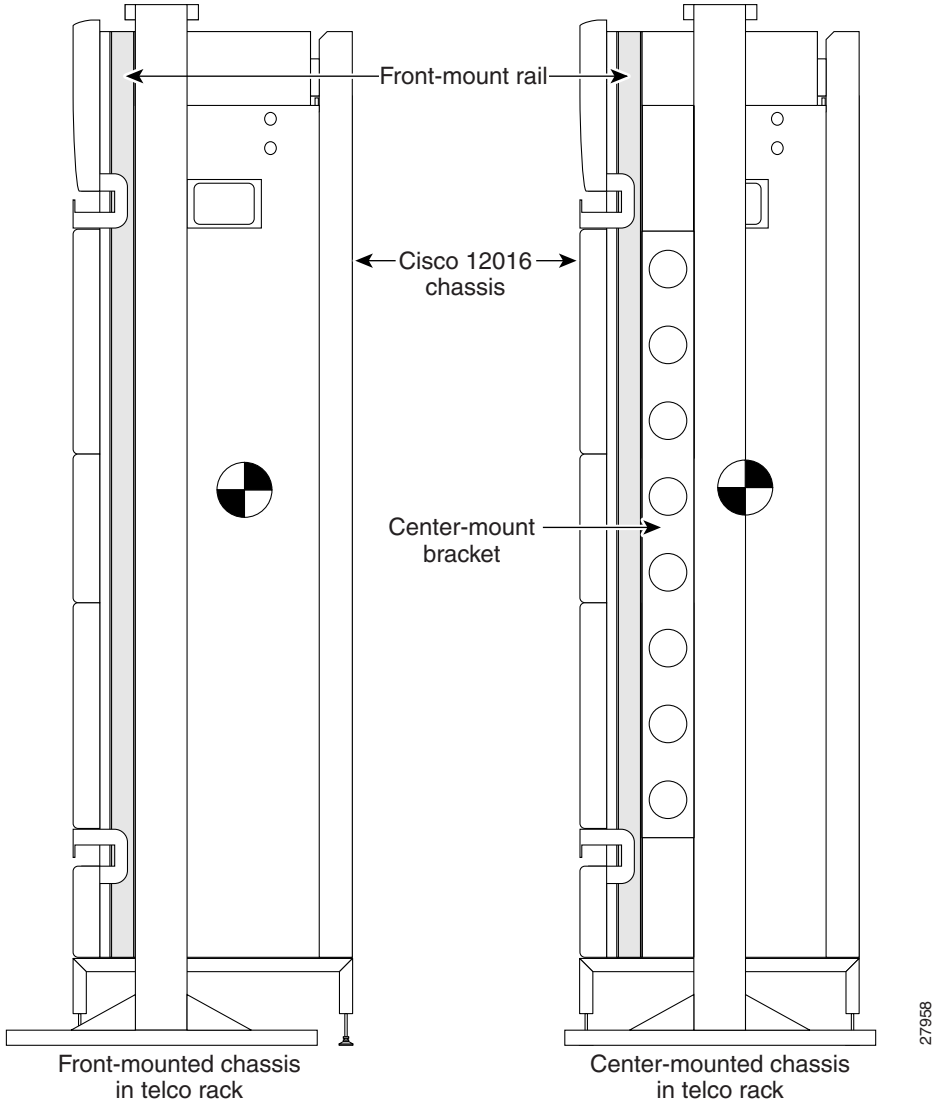

Site Layout and Equipment Dimensions

To help maintain trouble-free operation, adhere to the following precautions when planning your rack installation:

- Ensure the site of the rack includes provisions for source AC or DC power, grounding, and network interface cables.
- Allow sufficient space to work around the rack during the installation. You need:
  - At least 3 feet adjacent to the rack to move, align, and insert the chassis.
  - At least 2 feet in front of the power shelf to insert power entry modules.
- Maintain at least 24 inches (61 cm) of clearance in front of and behind the chassis for maintenance after installation.
- To mount the router between two posts or rails, the usable aperture (the width between the *inner* edges of the two mounting flanges) must be at least 17.7 inches (45.0 cm).
- When fully populated with cards, the router can weigh as much as 440 lb (200 kg). Mount the router so that the bottom of the router chassis is no higher than 10 inches (25.4 cm) from the floor to keep the center of gravity of the rack as low as possible. To maintain equipment rack stability and to ensure your safety, make sure you install any stabilizing devices provided before you install the router.
- If you use a telco-style rack, the weight of the chassis is cantilevered off of the two rack posts. Make sure that:
  - The weight of the router does not make the frame unstable.
  - The frame is bolted to the floor and is secured to the building structure using either wall brackets or overhead brackets.
- When mounting the router in a telco-type rack or 4-post rack, be sure to use all of the screws provided to secure the chassis to the rack posts.
- For theCisco XR 12416 router, the mounting rails on a 4-post rack must be recessed no more than 1.5 inches for the front door to fully open and close and to provide adequate room for cable routing.

- Install the cable-management brackets included with the router to keep cables organized. Be sure to:
  - Use appropriate strain-relief methods to protect cables and equipment connections.
  - Make sure that cables from other equipment installed in the rack do not restrict access to the card cages.
- To avoid noise interference in network interface cables, do not route them directly across or along power cables.

Figure 2-4 shows the footprint and outer dimensions of the of router chassis.

Figure 2-4 Router Chassis Footprint and Dimensions—Top View

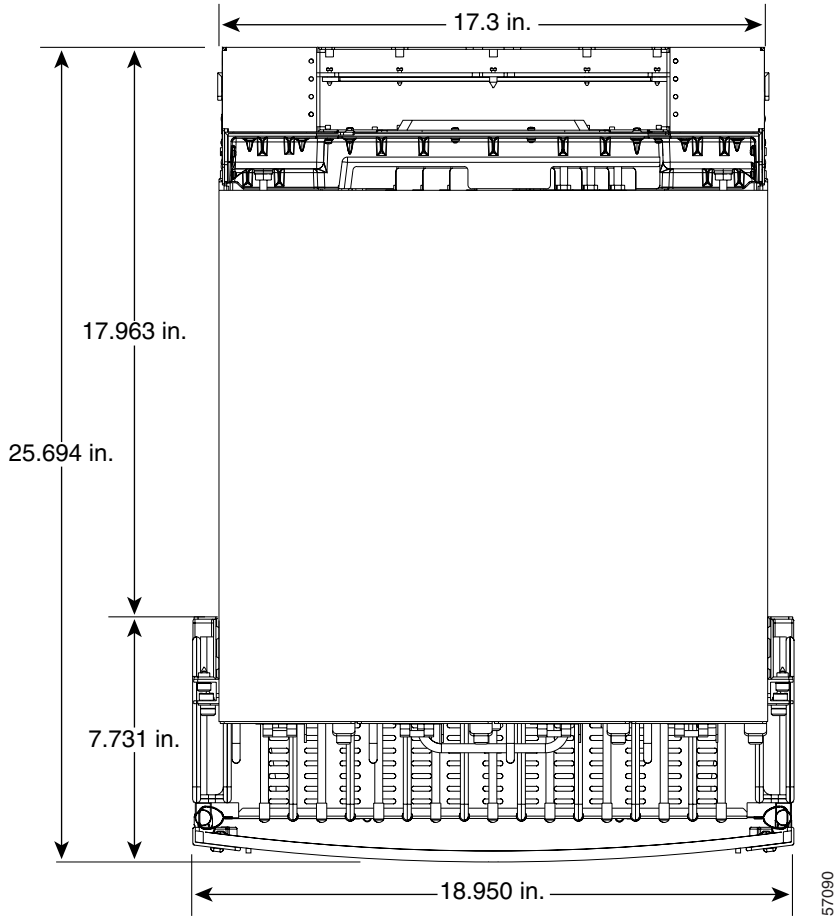

Air Flow Guidelines

Cool air is circulated through the router chassis by two blower modules. The blower modules maintain acceptable operating temperatures for the internal components by drawing in cool air through the air filter in front of the switch fabric card cage (middle), and circulating the air through both card cages (Figure 2-5).

Each power supply is also equipped with a fan that draws cooler air into the front of the power supply and forces warmer air out of the back of the chassis.

When selecting a site to install the router, observe the following guidelines:

- Dust free area—The site should be as dust free as possible. Dusty environments can clog the air filter or power supply intake vents, reducing the cooling air flow through the router. Clogged filters and vents can cause an overtemperature condition in the router.
- Unrestricted air flow—Allow sufficient air flow by maintaining a minimum of 6 inches (15.24 cm) of clearance at both the inlet and exhaust openings on the chassis and the power modules. If the air flow is blocked or restricted, or if the inlet air is too warm, an overtemperature condition can occur within the router. Under extreme conditions, the environmental monitoring system will power off the router to protect the components.

Figure 2-5 Air Flow Path through the Router - Side View

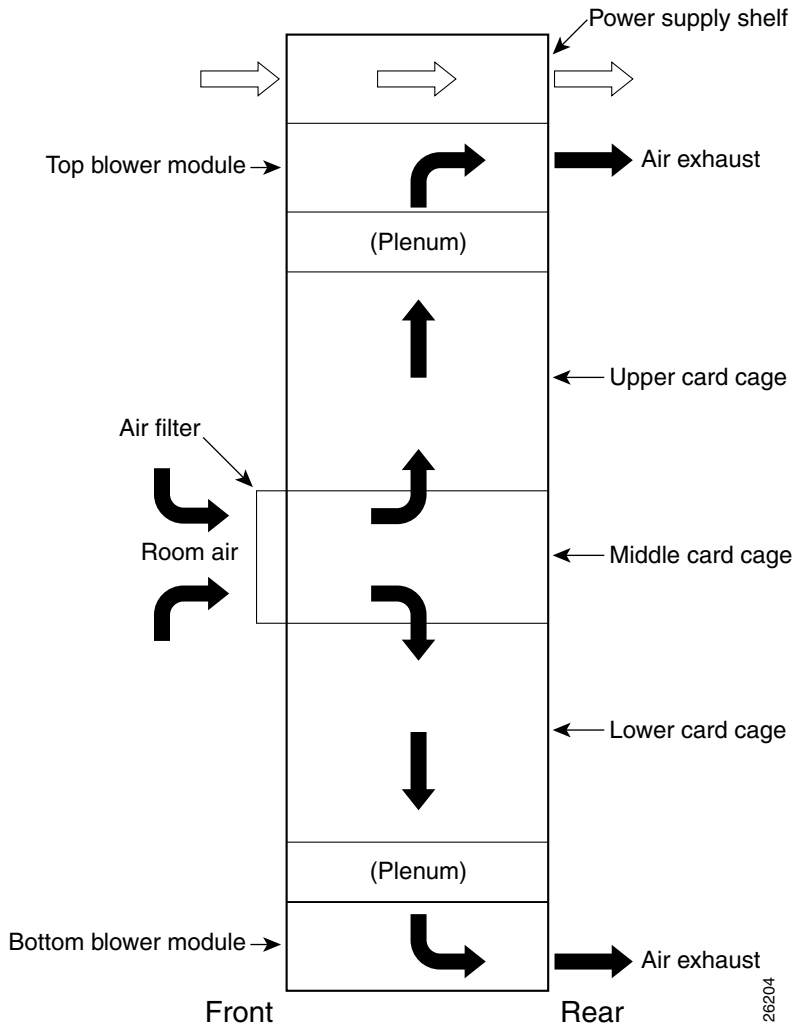

Temperature and Humidity Guidelines

The operating and nonoperating environmental site requirements are listed in Table A-4 on page A-4. The router normally operates within the ranges listed in the table, however, if a temperature measurement is approaching a minimum or maximum parameter it indicates a potential problem. Maintain normal operation by anticipating and correcting environmental anomalies before they approach critical values by properly planning and preparing your site before you install the router.

Power Connection Guidelines

You can configure the router with either an AC-input or DC-input power subsystem, so the site power source requirements differ depending on the power subsystem in your router. Ensure all power connection wiring conforms to the rules and regulations in the National Electrical Code (NEC), as well as local codes.

Caution Proper grounding is necessary to avoid damage from lightning and power surges. See the "Router Bonding and Grounding Receptacles—Top Rear" section on page 2-22 for grounding requirements.

AC-Powered Routers

AC PEMs operate in the nominal range of 200 VAC to 240 VAC and require a minimum service of:

- 20 A for operation in North America
- 16 A for international operation
- 13 A for operation in the UK

Each of the AC power inputs requires separate dedicated branch circuit. For a list of the nominal and acceptable value ranges for source AC power, refer to Table A-2 on page A-3.

Figure 2-6 shows different styles of AC power cords used to connect to the local AC power source that are available for North America and various locales.

Figure 2-6 AC Power Cord Plugs and Appliance Coupler

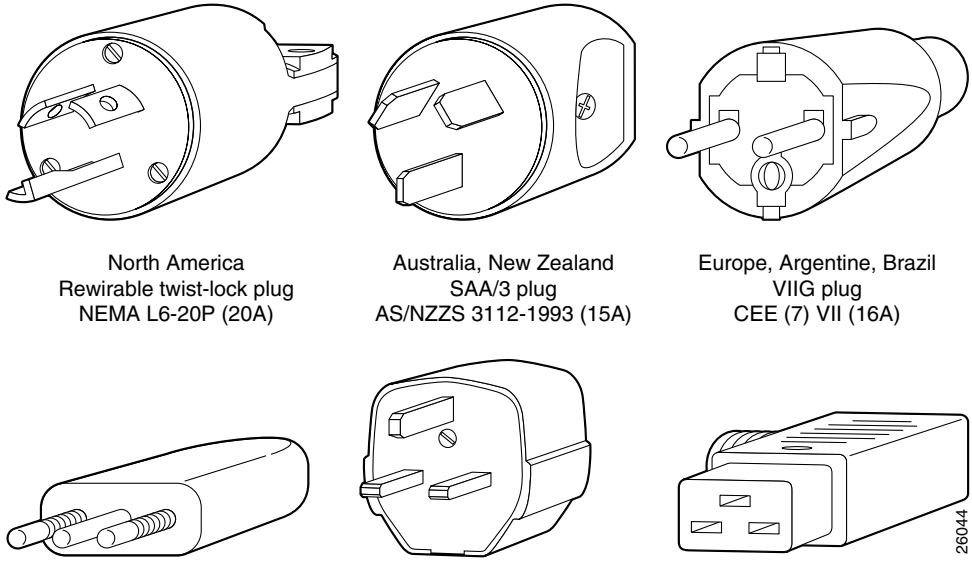

North America
Rewirable twist-lock plug
NEMA L6-20P (20A)

Australia, New Zealand
SAA/3 plug
AS/NZZS 3112-1993 (15A)

Europe, Argentine, Brazil
VIIG plug
CEE (7) VII (16A)

Italy
1/3/16 plug
CEI 23-16 (16A)

United Kingdom
BS89/13
BS 1363/A
(13A; replaceable fuse)

Appliance coupler
C19W coupler
Hot EN60320/C19 (20A)

Table 2-1 lists power cord options. All AC-input power supply power cords measure 14 feet (4.3 m).

Table 2-1 AC Power Cord International Options

Label	Description	Part Number
North America	20 A, 250 VAC	CAB-GSR16-US=
Australia, New Zealand	15 A, 250 VAC	CAB-GSR16-AU=
Europe, Argentina, Brazil	16 A, 250 VAC	CAB-GSR16-EU=
Italy	16 A, 250 VAC	CAB-GSR16-IT=
United Kingdom	13 A, 250 VAC (13 A replaceable fuse)	CAB-GSR16-UK=

DC-Powered Routers

Connections to DC PEMs are rated at 60 amps maximum. A dedicated, commensurately rated DC power source is required for each PEM connection.

For DC power cables, we recommend that you use a commensurately rated, high-strand-count copper wire cable. Connection to the DC power shelf requires one earth ground cable and two cable leads; a source DC (–) and source DC return (+) for each PEM. The length of the cables depends on your router location from the source power.

Note DC power cables are not available from Cisco, but are available from any commercial cable vendor.

You must terminate DC power cables using cable lugs at the power shelf end. Ensure the lugs are dual-hole and that they are able to fit over M6 terminal studs at 0.625-inch (15.88-mm) centers (for example, Panduit Part Number LCD8-14A-L or equivalent).

Figure 2-7 shows the type of lug required for the DC-input cable connections.

Figure 2-7 DC Power Cable Lug

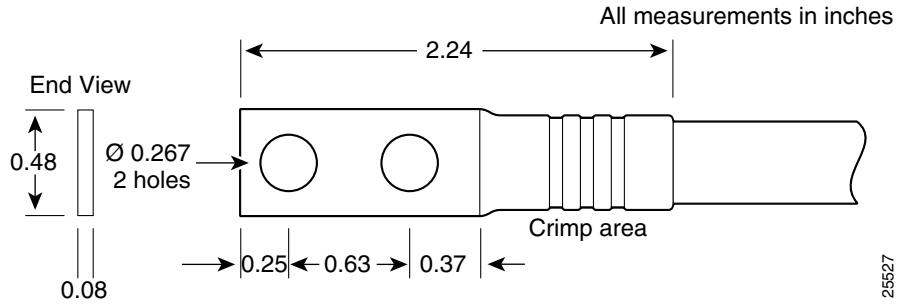

Figure 2-8 shows a source DC power distribution scheme for a DC-input power shelf.

It shows two power cables attached to the DC-input power lugs for power shelf bay B1 (far right bay of the DC-input power shelf when looking at the back panel).

The color coding of the source DC power cable leads depends on the color coding of the site DC power source. Typically, green or green and yellow indicate that the cable is a ground cable. Because there is no color code standard for the source DC wiring, be sure that the power cables are connected to the DC-input power shelf terminal studs using the proper positive (+) and negative (–) polarity.

- In some cases, the source DC cable leads might have a positive (+) or a negative (–) label. This is a relatively safe indication of the polarity, but you must verify the polarity by measuring the voltage between the DC cable leads. When making the measurement, the positive (+) lead and the negative (–) lead must always match the (+) and (–) labels on the power shelf.
- A green (or green and yellow) cable typically indicate that it is a ground cable.

Figure 2-8 Typical Source DC Power Cabling Scheme for Power Shelf Bay B1

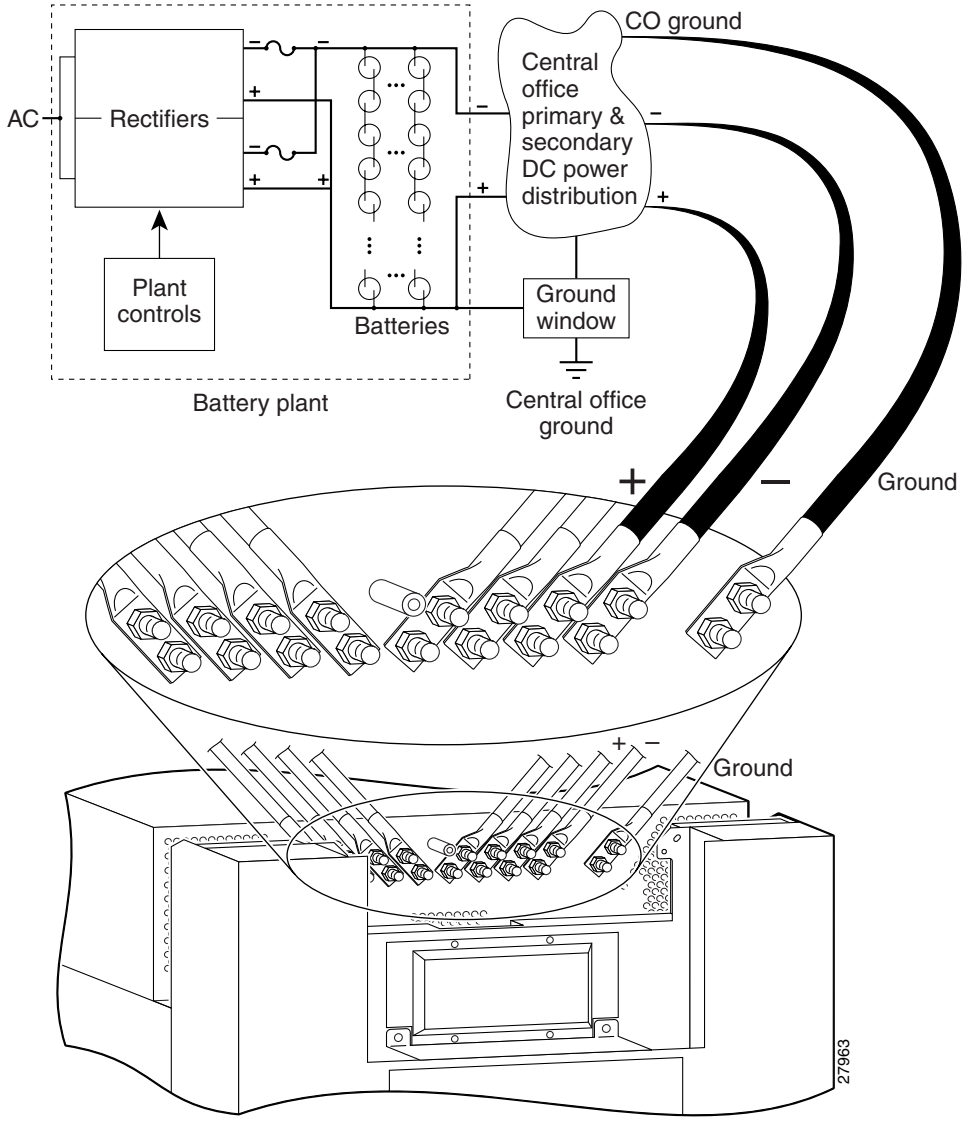

Caution DC PEMs contains circuitry to trip the breaker on the PEM if the PEM detects a reverse polarity condition. No damage should occur from reverse polarity, but you should correct a reverse polarity condition immediately.

For a list of the nominal and acceptable value ranges for source DC power, refer to Table A-3 on page A-4.

NEBS Supplemental Unit Bonding and Grounding Guidelines

Although the router chassis requires a safety earth ground connection as part of the power cabling to the power shelf, we also recommend that you connect the central office ground system or interior equipment grounding system to the supplemental bonding and grounding connections.

Supplemental connections are located at the top of the power interface panel on the back of the chassis (Figure 2-9), and near the lower corners of the switch fabric card cage on the front flanges of the chassis (Figure 2-10). The DC return of this system should remain isolated from the system frame and chassis (DC-I).

This grounding points are also referred to as the network equipment building system (NEBS) bonding and grounding connections.

Note These bonding and grounding connections satisfy the Telcordia NEBS requirements for supplemental bonding and grounding connections. If you are not installing the router in a NEBS environment, you can choose to bypass these guidelines and rely on the safety earth ground connections to the AC and DC power shelves.

Figure 2-9 Router Bonding and Grounding Receptacles—Top Rear

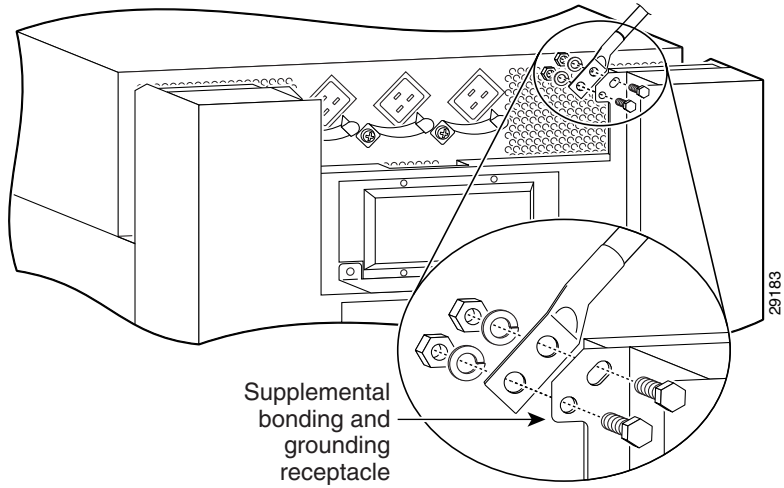

Figure 2-10 Router Bonding and Grounding Receptacles—Front

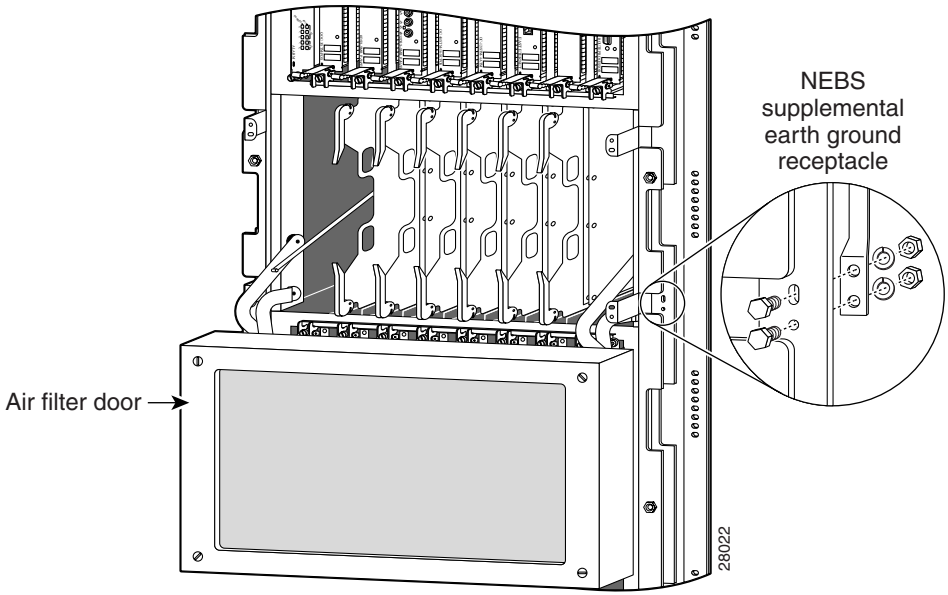

To ensure a satisfactory supplemental ground connection to the router, use the following parts:

Note These parts are not available from Cisco, but are available from commercial vendors.

- Two grounding lugs, which have two M6 bolt holes with 0.625 to 0.75-inch (15.86 to 19.05-mm) spacing between them, and a wire receptacle large enough to accept a 6-AWG or larger, multistrand copper wire. This lug is similar to those used for the DC-input power supply leads (see Figure 2-7).
- Two M6 hex-head nuts and locking washers (nickel-plated brass is ideal).
- Two grounding wires. Although we recommend at least 6-AWG multistrand copper wire, the wire diameter and length depend on your router location and site environment.

Site Wiring Guidelines

When planning the location of the router, consider distance limitations for signaling, electromagnetic interference (EMI), and connector compatibility. If the wiring is run for any significant distance in an electromagnetic field, interference can occur between the field and the signals on the wires. Poor wiring can cause:

- Radio interference emanating from the wires.
- Strong EMI, especially when caused by lightning or radio transmitters. EMI can destroy the signal drivers and receivers in the router, and can even create an electrical hazard by conducting power surges through lines and into equipment.

Note To predict and remedy strong EMI, you may need to consult with experts in radio frequency interference (RFI).

Site wiring is unlikely to emit radio interference if you use twisted-pair cable with a good distribution of grounding conductors. Use a high-quality twisted-pair cable with one ground conductor for each data signal, when applicable.

Give special consideration to the effect of a lightning strike in your vicinity, especially if the wiring exceeds the recommended distances, or if it passes between buildings. The electromagnetic pulse (EMP) caused by lightning or other high-energy phenomena can easily induce enough energy into unshielded conductors to destroy electronic devices. If you have experienced EMP problems in the past, you may want to consult experts in electrical surge suppression and shielding.

Most data centers cannot resolve the infrequent but potentially catastrophic problems without pulse meters and other special equipment. In addition, these problems can take a great deal of time to identify and resolve. We recommend that you take the necessary precautions to avoid these problems by providing a properly grounded and shielded environment, with special attention to issues of electrical surge suppression.

PRP Port Connection Guidelines

This section contains detailed cabling and signal information for all interface and port connections to the PRP. It also provides information for Ethernet routing and equipment.

Caution Ports labeled Ethernet, 10BASE-T, Token Ring, Console, and AUX are safety extra-low voltage (SELV) circuits. Only connect SELV circuits to other SELV circuits.

PRP Auxiliary and Console Port Connection Guidelines

The PRP has two RJ-45 connection ports:

- Auxiliary port— DTE RJ-45 interface for connecting a modem or other DCE device (such as a CSU/DSU or another router) to the PRP.
- Console port—DCE RJ-45 interface for connecting a data terminal device to the router, which you need to perform the initial configuration of the router.

Note The auxiliary and console ports are asynchronous serial ports. Ensure that devices connected to these ports are capable of asynchronous transmission.

Figure 2-11 shows the auxiliary and console port connections from the PRP to the associated devices.

Figure 2-11 PRP Auxiliary and Console Port Connections

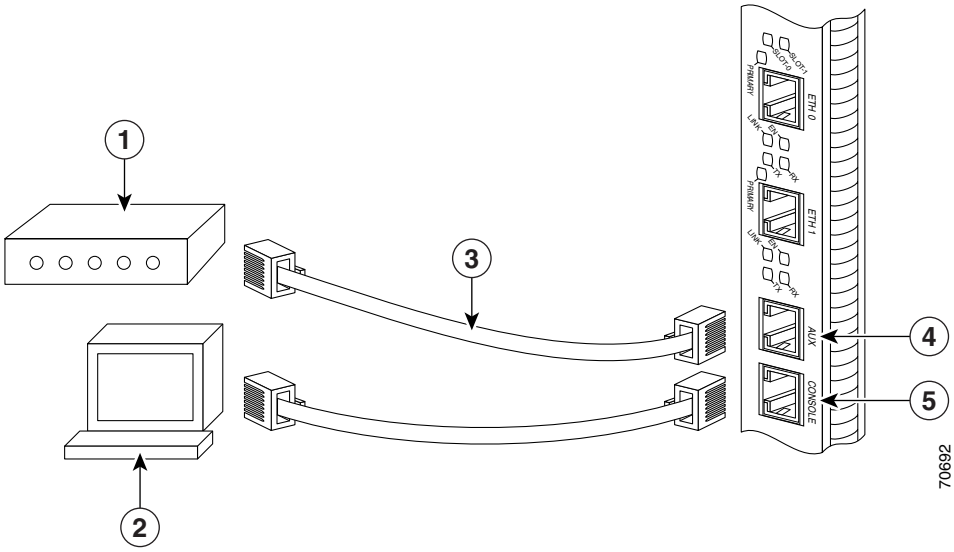

1	Modem	**4**	Auxiliary port
2	Console terminal	**5**	Console port
3	RJ-45 cables		

PRP Auxiliary Port Signals

The PRP auxiliary port is a DTE, RJ-45 interface for connecting a modem or other DCE device (such as a CSU/DSU or another router) to the PRP. The auxiliary port supports hardware flow control and modem control.

Table 2-2 lists the signals used on the auxiliary port.

Table 2-2 PRP Auxiliary Port Signals

Auxiliary Port Pin	Signal	Input/Output	Description
1	RTS	Output	Request to send
2	DTR	Output	Data terminal ready
3	TxD	Output	Transmit data
4	GND	—	Signal ground
5	GND	—	Signal ground
6	RxD	Input	Receive data
7	DSR	Input	Data set ready
8	CTS	Input	Clear to send

PRP Console Port Signals

The PRP console port is a DCE RJ-45 interface for connecting a terminal to the router. The console port does not support modem control or hardware flow control and requires a roll-over RJ-45 cable.

Before connecting a terminal to the console port, check the terminal setting for the data transmission rate, in bits per second (bps). The terminal transmission rate setting must match the default rate of the PRP console port, which is 9600 bps. Set the terminal to these operational values: 9600 bps, 8 data bits, no parity, 2 stop bits (9600 8N2).

Table 2-3 lists the signals used on the console port.

Table 2-3 PRP Console Port Signals (with RJ45 roll-over cable)

Console Port Pin	Signal	Input/Output	Description
1[1]	—	—	—
2	DTR	Output	Data terminal ready
3	TxD	Output	Transmit data
4	GND	—	Signal ground
5	GND	—	Signal ground
6	RxD	Input	Receive data
7	DSR	Input	Data set ready
8[1]	—	—	—

1. These pins are not connected.

PRP Ethernet Connections

The PRP has two RJ-45 MDI Ethernet ports; ETH0 and ETH1 (Figure 2-12).

Figure 2-12 PRP Ethernet Connections

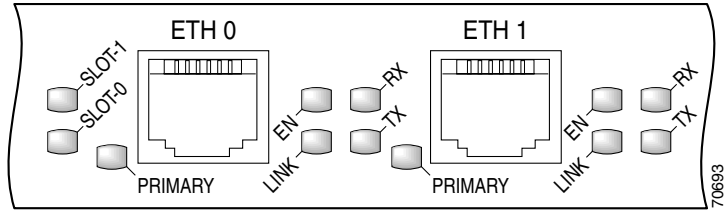

These connections support IEEE 802.3 and IEEE 802.3u interfaces compliant with 10BASE-T and 100BASE-TX standards. The transmission speed of the Ethernet ports is autosensing by default and is user configurable.

The PRP Ethernet port does not provide external routing functions. Its primary roles are to act as a Telnet port into the router, and to boot or access Cisco IOS XR software images over a network to which the PRP Ethernet port is directly connected.

Caution Cisco Express Forwarding (CEF) functions on these ports are switched off by default for security reasons. We strongly caution you to consider the security implications of switching on CEF routing functions on these ports.

Figure 2-13 shows:

- You cannot access Network 2.0.0.0 from Ethernet port (E0) on the PRP in Router A. You can only access Host A, Host B, and Router C, which are in Network 1.0.0.0 (see dotted-line arrows).
- To access Network 2.0.0.0 from Router A, you must use an interface port on one of the line cards (a POS line card in this example) in Router A. Data from Router A is routed through Router B and Router C, to reach Network 2.0.0.0 (see solid-line arrows).

Figure 2-13 Using the Ethernet Port on the PRP

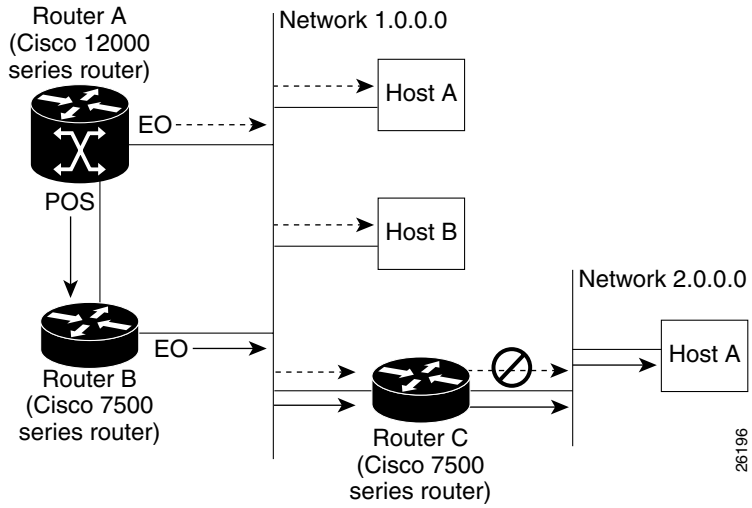

PRP RJ-45 Ethernet Connections

The RJ-45 Ethernet connection does not require an external transceiver. Figure 2-14 shows the pin orientation of the RJ-45 Ethernet port and the modular cable plug it accepts.

Figure 2-14 RJ-45 Receptacle and Plug

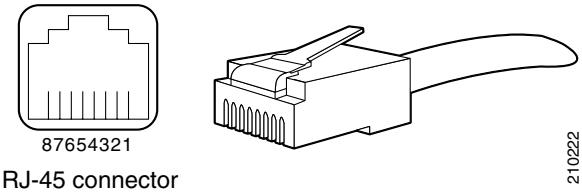

RJ-45 connector

Table 2-4 lists the RJ-45 pin signals used on the connector.

Table 2-4 PRP RJ-45 Ethernet Receptacle Pinout

Ethernet Port Pin	Signal	Description
1	TxD+	Transmit data +
2	TxD–	Transmit data –
3	RxD+	Receive data +
4	Termination network	No connection
5	Termination network	No connection
6	RxD–	Receive data –
7	Termination network	No connection
8	Termination network	No connection

When connecting the RJ-45 port to a hub or repeater, use the straight-through cable pinout shown in Figure 2-15.

Figure 2-15 Straight-Through Cable Pinout to Hub or Repeater

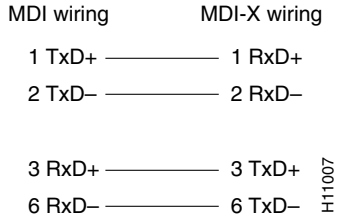

When connecting two PRPs back-to-back, use the crossover cable pinout shown in Figure 2-16.

Figure 2-16 Crossover Cable Pinout Between PRPs

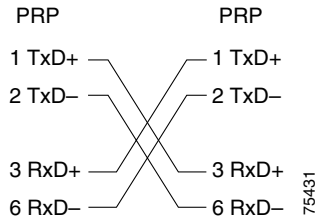

Table 2-5 lists the cabling specifications for 100-Mbps transmission over unshielded twisted-pair (UTP) cables.

Note The transmission speed of the Ethernet ports is autosensing by default and is user configurable.

Table 2-5 Specifications and Connection Limits for 100-Mbps Transmission

Parameter	RJ-45
Cable specification	Category 5[1] UTP, 22 to 24 AWG[2]
Cable length (max)	—
Segment length (max)	328 feet (100 m) for 100BASE-TX
Network length (max)	656 feet (200 m)[3] with 1 repeater

1. EIA/TIA-568 or EIA-TIA-568 TSB-36 compliant. Not supplied by Cisco.
2. AWG = American Wire Gauge. This gauge is specified by the EIA/TIA-568 standard.
3. Specifically, the length between any two stations on a repeated segment.

Table 2-6 lists IEEE 802.3u physical characteristics for 100BASE-TX.

Table 2-6 IEEE 802.3u Physical Characteristics

Parameter	100BASE-TX
Data rate (Mbps)	100
Signaling method	Baseband
Maximum segment length	100 m between DTE and repeaters
Media	Category 5 UTP
Topology	Star/Hub

Alarm Card Connection Guidelines

The router is equipped with two alarm cards:

- One alarm card occupies the dedicated far *left* slot in the upper card cage
- The second alarm card occupies the dedicated far *right* slot in the lower card cage

Each alarm card has one 25-pin D-subconnector (ALARM) on the front panel that connects the router to an external site alarm maintenance system (Figure 2-17). When a critical, major, or minor alarm is generated, it energizes the alarm relays on the alarm card to activate the external site alarm.

Figure 2-17 Alarm Card Connector Location

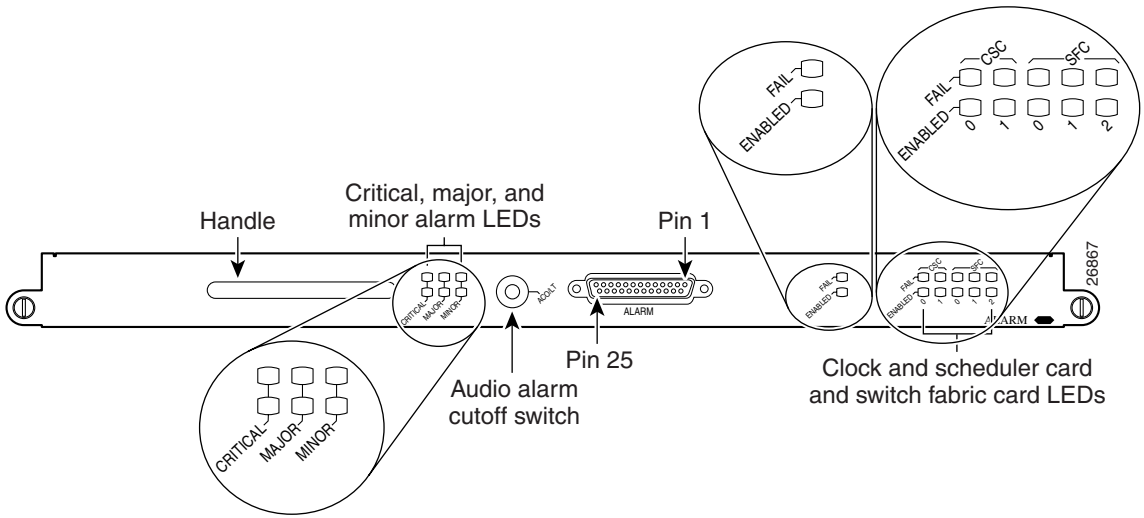

The alarm relay contacts on the alarm card consist of standard *common*, *normally open*, and *normally closed* relay contacts that are wired to the pins on the connectors.

Caution Only safety extra-low voltage (SELV) circuits can be connected to the alarm connector. Maximum rating for the alarm circuit is 2 A, 50 VA.

Note To comply with the intrabuilding lightning surge requirements of GR-1089-CORE, Issue II, Revision 01, February 1999, you must use a shielded cable when connecting to the external alarm ports on the alarm card. The shielded cable is terminated by shielded connectors on both ends, with the cable shield material tied to both connectors.

Table 2-7 lists the pin-to-signal correspondence between the cable connector pins and the alarm card relay contacts.

Table 2-7 Alarm Connector Pinout

Pin Group	Common	Normally Open	Normally Closed
Critical audible alarm	2	1	14
Major audible alarm	16	3	15
Minor audible alarm	5	4	17
Critical visual alarm	19	6	18
Major visual alarm	8	7	20
Minor visual alarm	22	9	21
Alarm input	13	25	—

CHAPTER 3

Installing the Router

This chapter contains the procedures to install the router in a rack. The installation is presented in the following sections:

- Pre-Installation Considerations and Requirements, page 3-2
- Rack-Mounting the Router Chassis, page 3-6
- Supplemental Bonding and Grounding Connections, page 3-19
- Attaching the Vertical Cable-Management Trough, page 3-23
- Connecting Line Card Network Interface Cables, page 3-25
- Connecting PRP Route Processor Cables, page 3-29
- Connecting an Alarm Card Cable, page 3-33
- Connecting Power to the Power Shelf, page 3-34

Pre-Installation Considerations and Requirements

Before you perform any procedures in this chapter, review the following sections in Chapter 2, "Preparing for Installation":

- Safety Guidelines, page 2-2
- Site Requirement Guidelines, page 2-7

In particular, observe the guidelines for preventing electrostatic discharge (ESD) damage described in the Preventing Electrostatic Discharge Damage, page 2-4 and use Figure 2-1 on page 2-5 as a reference in locating and using the ESD sockets on the front of the router chassis.

A fully equipped router with an optional two-level AC-input power shelf can weigh as much as 440 pounds (200 kg). The router ships on a scissor-jack platform that enables two people to install a fully loaded router into a rack without removing any of the components from the chassis.

Warning **This router is not designed to be installed as a shelf-mounted or a free-standing router. The router must be installed in a rack that is secured to the building structure. You must install the router in either a telco-style frame or a four-post equipment rack.**

For additional safety and compliance information, refer to the *Regulatory Compliance and Safety Information for Cisco 12000 Series Internet Routers* publication that accompanied your router.

Required Tools and Equipment

Before you begin the rack-mount installation, you must read and understand the information in the "Rack-Mounting Guidelines" section on page 2-7 and have the following tools and equipment:

- ESD-preventive wrist strap
- Number 1 and number 2 Phillips screwdrivers
- 1/4-inch (6.35-mm) and 3/16-inch (4.5-mm) flat-blade screwdrivers
- Tape measure
- Level (optional)
- 3/8-inch (10-mm) nutdriver (for systems equipped with the DC-input power shelf)
- 9/16-inch (14-mm) wrench (for chassis hold-down bolts and pallet hold-down bracket bolts)
- 3/4-inch (19-mm) socket and ratchet wrench

Unpacking and Positioning the Router

Follow the unpacking instructions that came with the router and use a safety hand truck to move the router to the location where it is being installed in a rack.

Save the packaging materials in case the router has to be repackaged to be shipped again.

Removing the Front Cover from Router

The Cisco XR 12416 router has a two-piece front cover. The covers have release buttons on both sides that give you the flexibility to open it from either the left side or from the right side.

To remove each front cover, grasp the sides of the cover and press both release buttons simultaneously to release the door from the chassis (Figure 3-1).

Figure 3-1 Removing the Front Covers

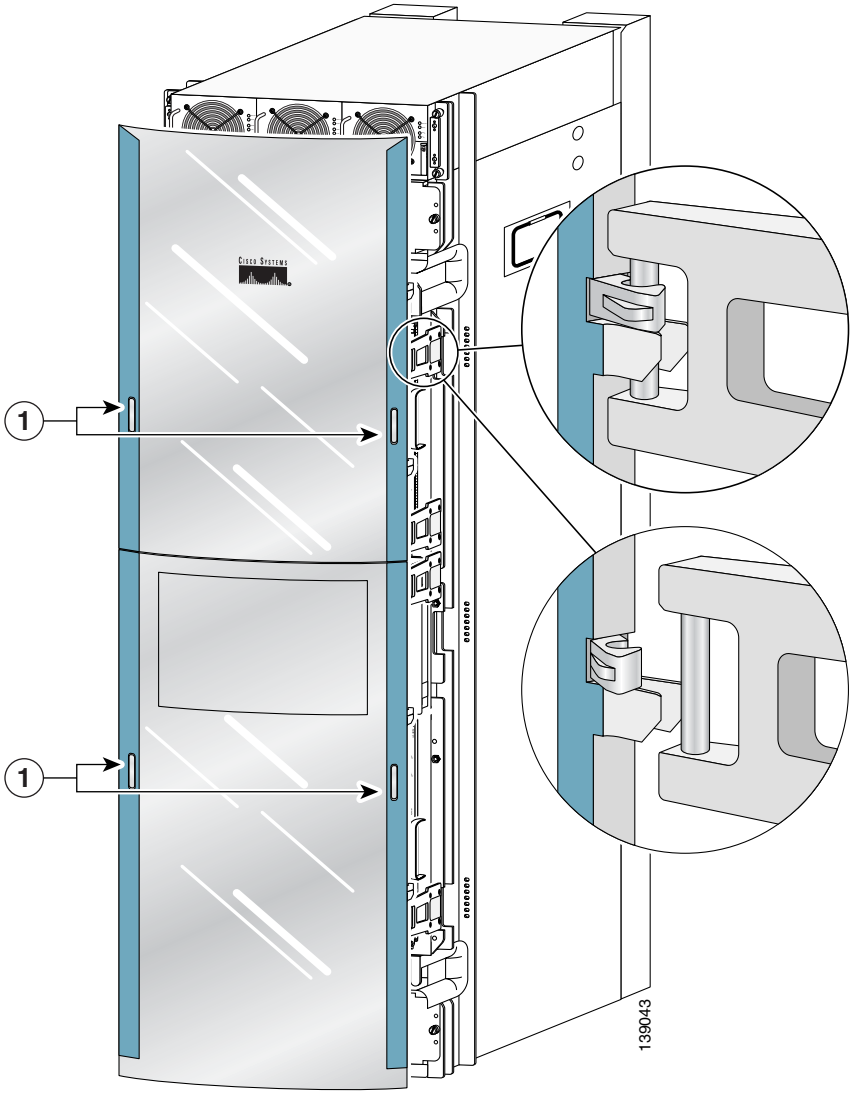

1	Release buttons

Rack-Mounting the Router Chassis

The router chassis can be installed in either a front-mounted position or a center-mounted position.

- In a front-mounted position, the chassis rack-mounting flanges are secured directly to the rack posts.
- In a center-mounted position, an optional set of center-mount brackets are secured to the rack posts and the chassis rack-mounting flanges are then secured to the center-mount brackets. The center-mounted position moves the center of gravity of the chassis closer to the vertical axis of the rack posts, which adds to the security and stability of the rack installation.

Warning **The chassis should be mounted on a rack that is permanently affixed to the building**

Verifying Rack Dimensions

Before you install the chassis, measure the space between the vertical mounting flanges (rails) on your equipment rack to verify that the rack conforms to the measurements shown in Figure 3-2.

Step 1 Mark and measure the distance between two holes on the left and right mounting rails.

- The distance should measure 18.31 inches ± 0.06 inches (46.5 cm ± 0.15 cm).

Note Measure for pairs of holes near the bottom, middle and top of the equipment rack to ensure that the rack posts are parallel.

Step 2 Measure the space between the inner edges of the left front and right front mounting flanges on the equipment rack.

- The space must be at least 17.7 inches (45 cm) to accommodate the chassis which is 17.25 inches (43.8 cm) wide and fits between the mounting posts on the rack.

Figure 3-2 Verifying Equipment Rack Dimensions

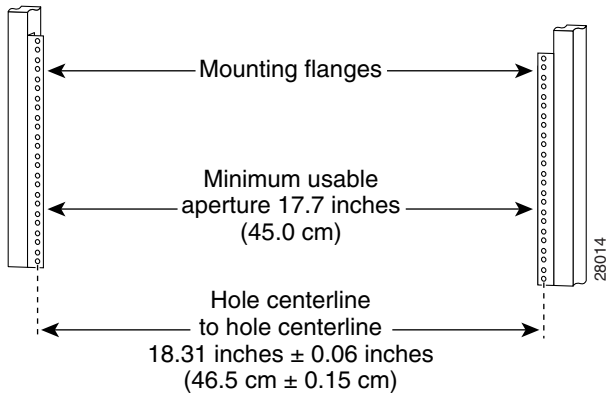

Installing Center-Mount Brackets—Optional

If you plan to install the router in the center-mount position, you must install the center-mount brackets to the rack rails first. If you do not plan to use the optional center-mount brackets, proceed directly to the "Installing the Chassis Rack-Mounting Platform" section on page 3-11.

The optional center-mount bracket installation kit ships in the accessories box included with the router and contains the following:

- Two center-mount brackets.
- 10 (minimum) Phillips binderhead screws (usually provided with the bracket kit) to secure the brackets to the mounting flanges (also called *rails*) in the rack. Five screws should be installed on each bracket.

Contact a Cisco service representative for assistance if any parts are missing.

Note Make sure you have performed the measurements described in "Verifying Rack Dimensions" section on page 3-6 before installing the center-mount brackets.

Use the following procedure to install the center-mount brackets to the rack rails.

Step 1 Determine the location in which you want to position the chassis in the rack, and mark holes at the same height on both the left and right rack rails.

Step 2 Identify the orientation of the left and right center-mount brackets (Figure 3-3).

Figure 3-3 Center-Mount Brackets

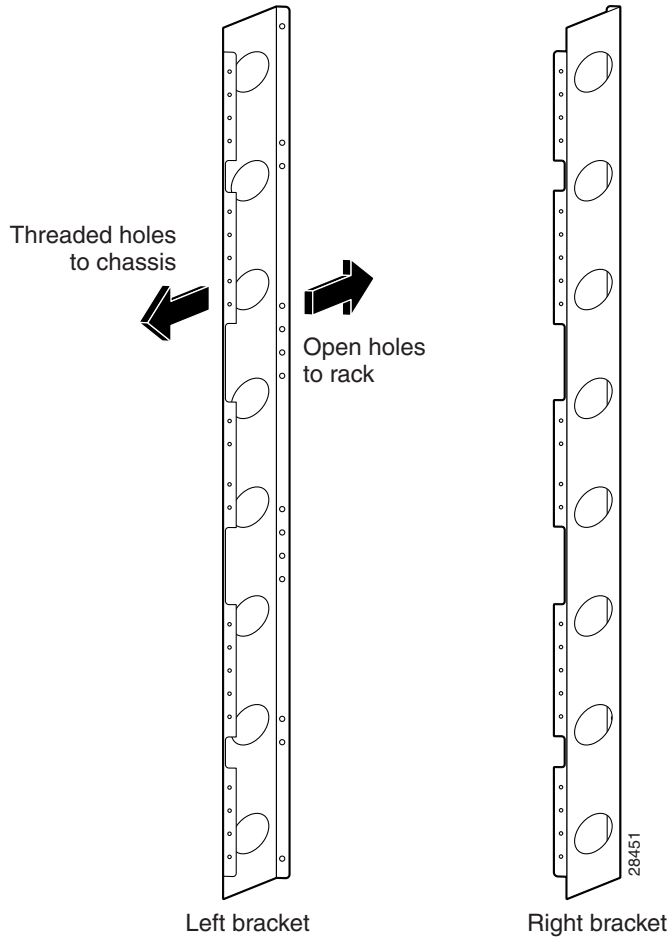

Step 3 Install the right center-mount bracket (Figure 3-4).

a. Align the bottom screw hole of the bracket with the marked screw hole at the bottom of the rack and finger tighten a screw in that hole.

b. Finger-tighten a second screw in the top hole of the bracket.

c. Finger-tighten three more screws in the middle of in the bracket.

d. Use a screwdriver to tighten all five screws securely.

Step 4 Repeat Step 3 for the left center-mount bracket.

Step 5 Use a level to verify that the tops of the two brackets are level, or use a measuring tape to verify that both brackets are the same distance from the top of the rack rails.

Figure 3-4 Installing a Center-Mount Rack-Mounting Bracket

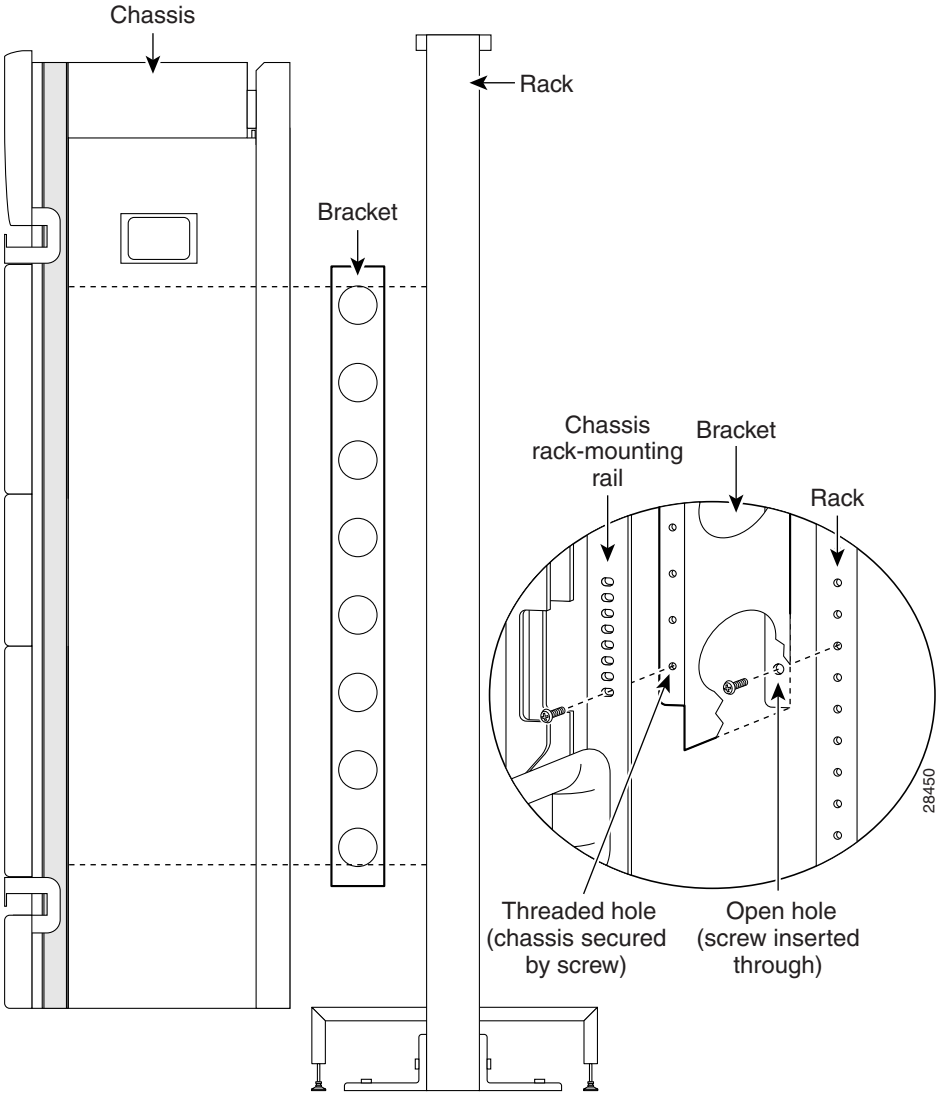

Installing the Chassis Rack-Mounting Platform

The rack-mounting platform is installed at the bottom of an empty rack and acts as a permanent support platform for the chassis. It can be installed in either the front-mounted position or the center-mounted position, to match the installed position of the chassis.

The platform is adjustable from a minimum height of 5.25 inches (13.34 cm) to a maximum height of 8.00 inches (20.32 cm). For telco-style racks, the bottom edge of the platform can be raised to approximately 6.00 inches (15.24 cm) to clear the cross-members at the bottom of the rack.

Warning **The chassis should be mounted on a rack that is permanently affixed to the building**

Use the following procedure to install the rack-mounting platform.

Step 1 Remove the platform from the accessory box.

Step 2 Adjust the height of the platform to match the required rack-mounting height for the chassis:

- **a.** Turn each of the adjustable feet to approximately the required platform height (Figure 3-5).
- **b.** Place the platform in the rack making sure that it clears any rack cross-members.
- **c.** Use a level to be sure the platform is level from side to side and front to back.
- **d.** Adjust the feet until the platform clears any obstacles and is level at the required platform height.

Step 3 Determine whether the platform is to be installed in the front-mounted position or in the center-mounted position, and adjust the positioning brackets on the platform:

- **a.** Locate the hole on the side of the platform that corresponds with the front-mounted or center-mounted position of the table.
- **b.** Align the side of the bracket with the round hole over the hole on the side of the platform, insert a screw, and use your fingers to loosely tighten it (see blow-out in Figure 3-5).

Repeat these steps to attach a bracket in the same position on the other side of the platform.

Step 4 Align the platform between the rack posts and set it in position so that the sides of the positioning brackets with the oblong holes are flush against the rack-mounting flanges.

Step 5 Secure the platform to the rack:

a. Locate an open screw hole through the oblong hole in the bracket, then insert a screw and use your fingers to loosely tighten it (see blow-out in Figure 3-5).

b. Repeat step a. for the other side of the platform.

c. Verify that the platform is level and seated squarely against the rack, then tighten all four screws.

Figure 3-5 The Chassis Rack-Mounting Platform

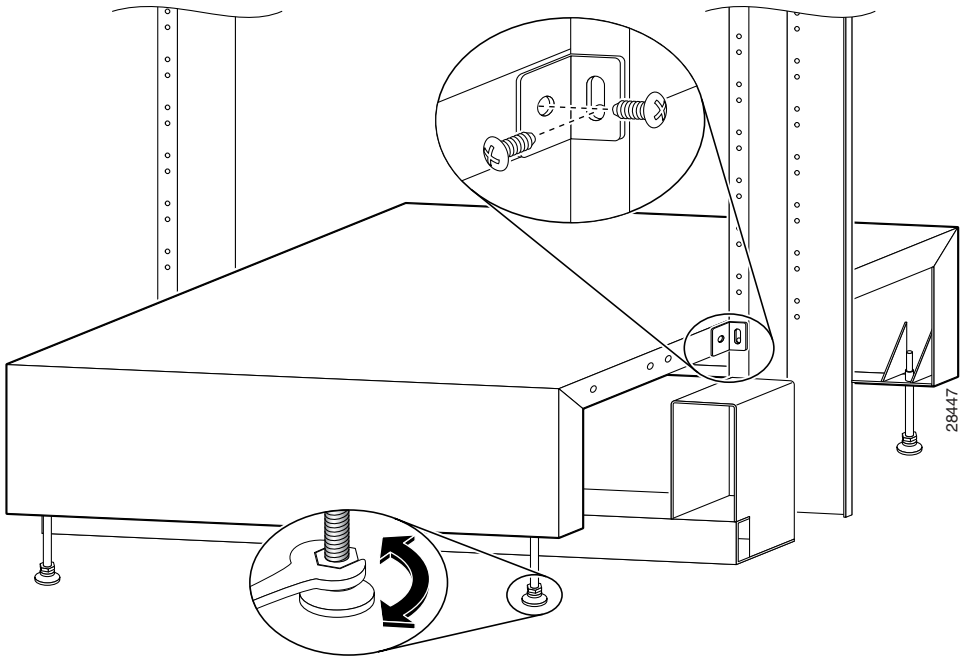

Unpack and Position the Router

Unpack the router following the instructions in the unpacking instructions that came with the router. Use a safety hand truck to move the router to the location where it is being installed and position it in front of the rack so that the back panel of the chassis faces the rack opening (Figure 3-6).

Figure 3-6 Positioning the Router for Insertion into the Rack

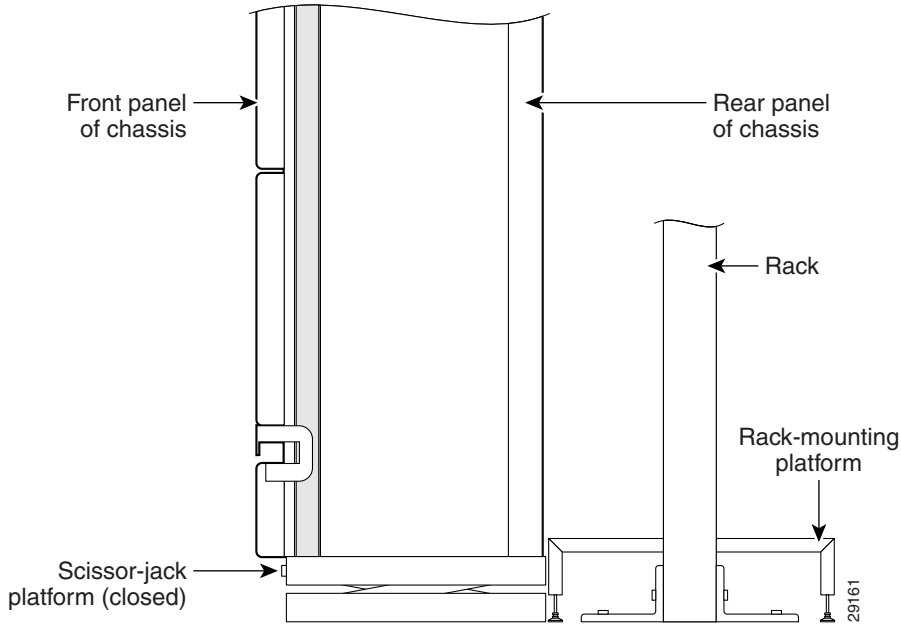

Installing the Chassis into the Rack

Use the following procedure to install the chassis in the rack.

Step 1 Rotate the scissor-jack screw counterclockwise slowly and expand the scissor-jack platform to raise the chassis to the required installation height (Figure 3-7).

Warning **A second person should be holding the chassis to prevent it from tipping while the platform is raised.**

Figure 3-7 Raising the Chassis to the Installation Height

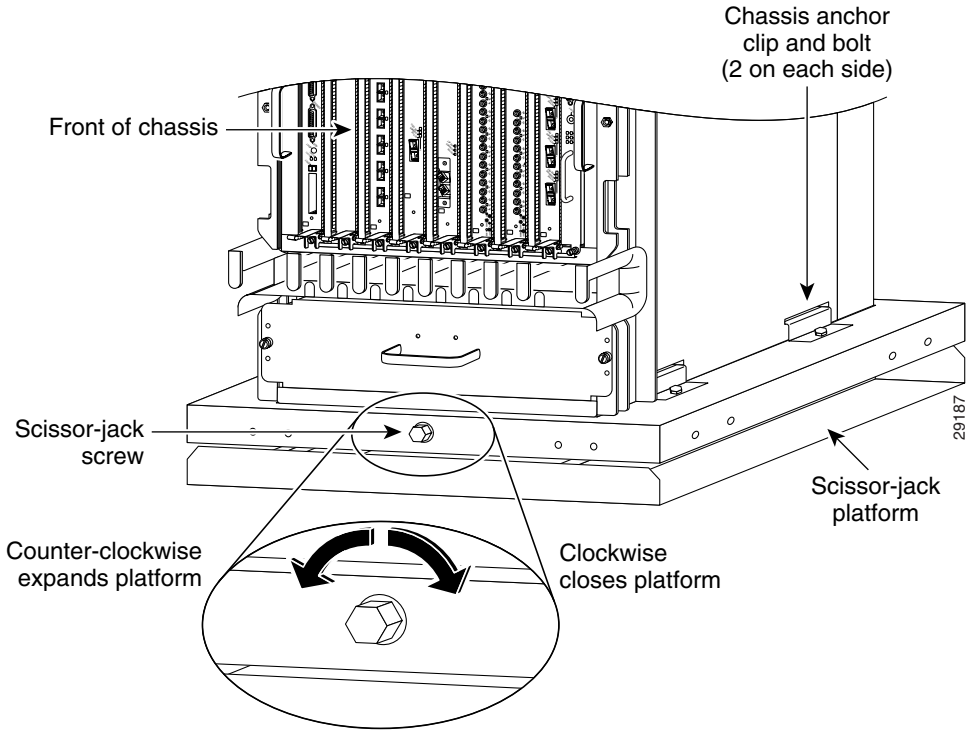

Step 2 Remove the four bolts and chassis anchor clips that secure the base of the chassis to the scissor-jack platform (Figure 3-8).

Figure 3-8 Removing the Chassis Anchor Clips

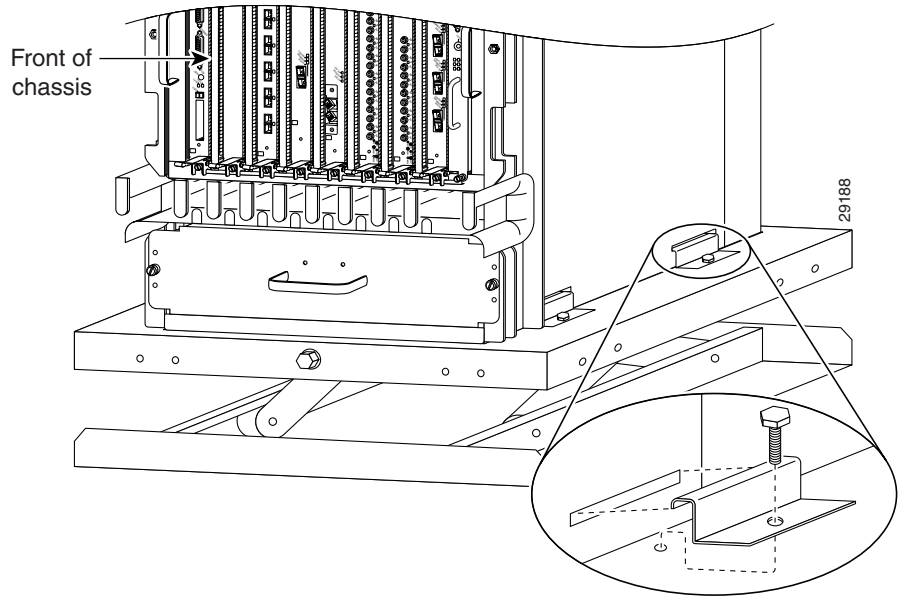

Step 3 Grasp the handle on the back panel of the chassis to carefully pull the chassis off of the scissor-jack platform and onto the rack-mounting platform while a second person pushes from the front of the chassis. (See Figure 3-9.)

Figure 3-9 Inserting the Router into the Rack

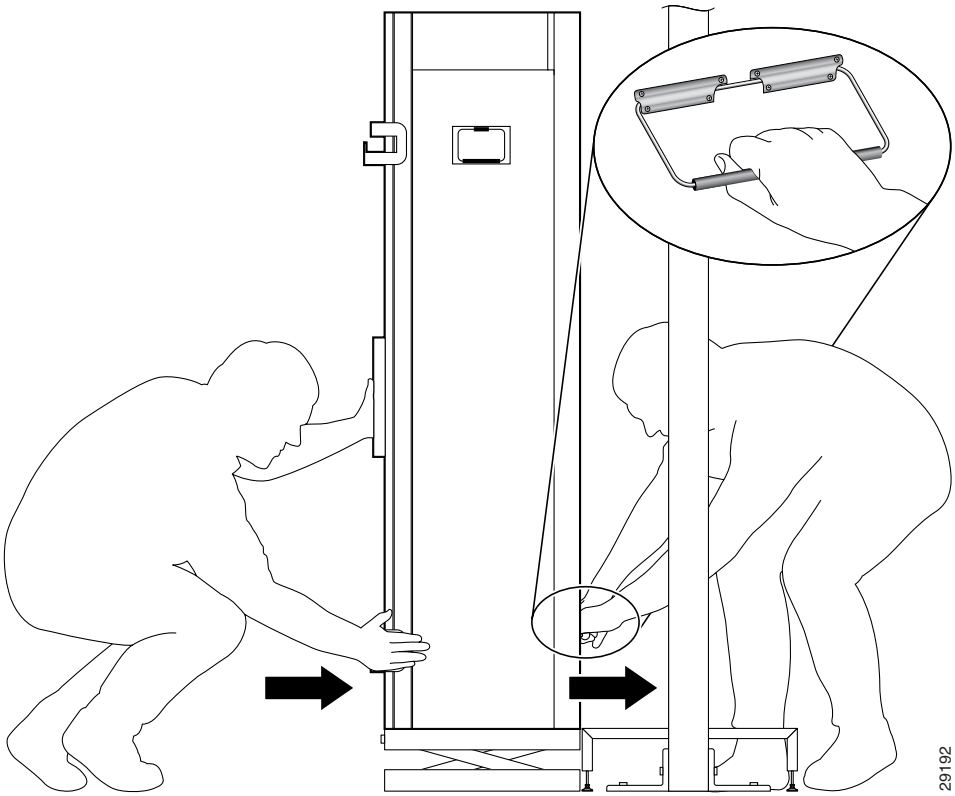

Warning **Do not attempt to lift the chassis with the handles on the back and sides of the chassis. These handles are not designed to support the weight of the chassis, and should be used only to steady and guide the chassis while it is being inserted into or removed from an equipment rack. To reduce the risk of damage to the chassis and serious bodily injury, do not use these handles to lift or support the chassis.**

Step 4 Insert the chassis into the rack until the chassis rack-mounting flanges are flush against the mounting flanges on the rack (or the optional center-mount brackets, if installed).

- The weight of the chassis is now supported by the rack-mounting platform. Remove the scissor-jack platform and set it safely aside.

Note Save and reassemble all parts of the shipping package in case it becomes necessary to transport the router to another location or return it to Cisco. Do not discard or destroy any of the shipping materials.

Step 5 Secure the chassis to the rack beginning (Figure 3-10):

a. Identify one of the holes in group A that aligns with a mounting hole on the mounting flanges of the rack.

b. Hold the chassis in position against the mounting flanges on the rack and have a second person insert and loosely tighten one of the mounting screws provided.

c. Repeat step b. for the mounting hole on the other side of the chassis.

Step 6 Repeat Step 5 for each group of chassis mounting holes (groups b through e).

Step 7 Tighten all mounting screws (five on each side of the chassis) securely.

Figure 3-10 Chassis Rack-Mounting Hole Groups

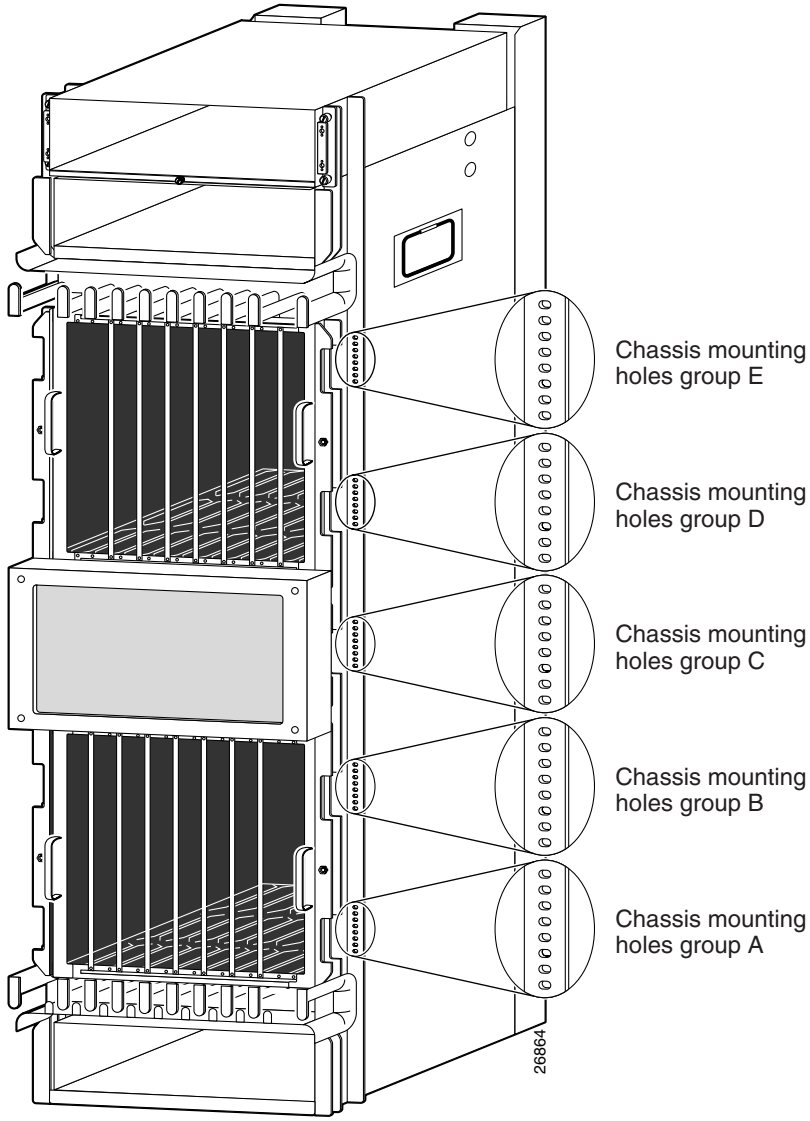

Supplemental Bonding and Grounding Connections

Before you connect power to the router, or power on the router for the first time, we recommend that you connect the central office ground system or new equipment building system (NEBS) to the supplemental bonding and grounding points on the router. For more information on supplemental bonding and grounding cable requirements, see the "Router Bonding and Grounding Receptacles—Top Rear" section on page 2-22.

There are two earth ground receptacles that you can use to connect a supplemental grounding cable to the chassis; one is on the front of the chassis behind the air filter door, and the other is located at the top rear of the chassis.

Use one of the following procedures to connect a grounding cable lug to the chassis:

- Connecting to the Front Grounding Receptacle, page 3-20
- Connecting to the Top Rear Receptacle, page 3-22

Connecting to the Front Grounding Receptacle

Use the following procedure to connect the supplemental grounding cable to front grounding receptacle.

Step 1 Loosen the two captive screws on each side of the air filter door and pivot the door open (Figure 3-11).

Figure 3-11 Opening the Air Filter Door

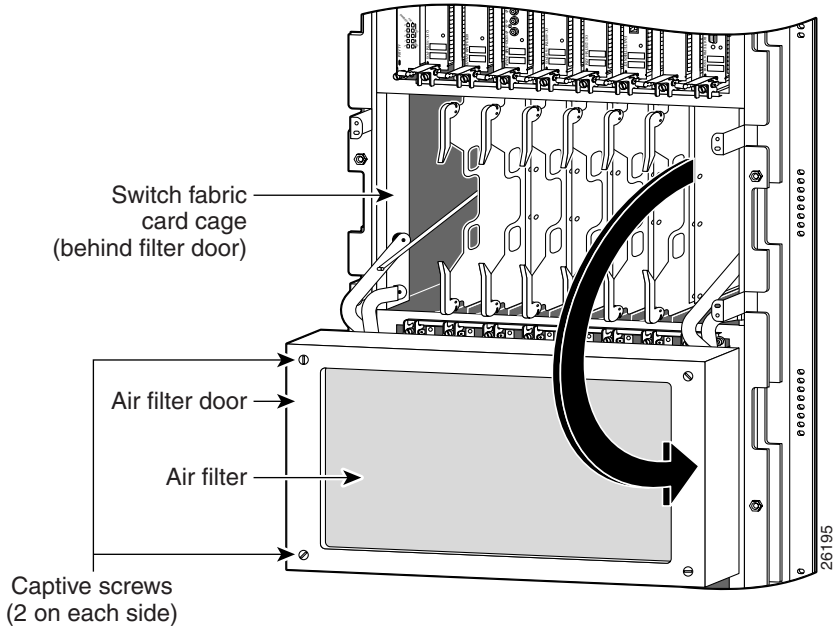

Step 2 Attach the grounding cable to the chassis (Figure 3-12):

a. Insert two M6 bolts through the grounding holes in the chassis.

b. Place the cable lug over the bolts and secure with the locking washers and nuts.

Figure 3-12 Router Front Bonding and Grounding Receptacles

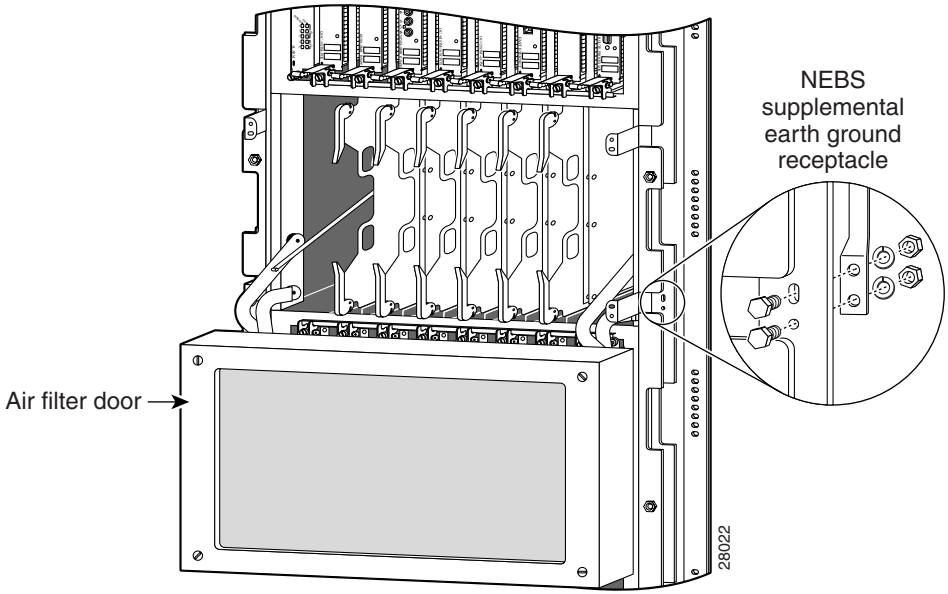

Step 3 Prepare the other end of the grounding wire and connect it to the appropriate grounding point at your site to ensure an adequate earth ground.

Connecting to the Top Rear Receptacle

Use the following procedure to connect the supplemental grounding cable to top rear grounding receptacle.

Step 1 Attach the grounding cable to the chassis (Figure 3-13):

a. Insert two M6 bolts through the grounding holes in the chassis.

b. Place the cable lug over the bolts and secure with the locking washers and nuts.

Figure 3-13 Router Top Bonding and Grounding Receptacles

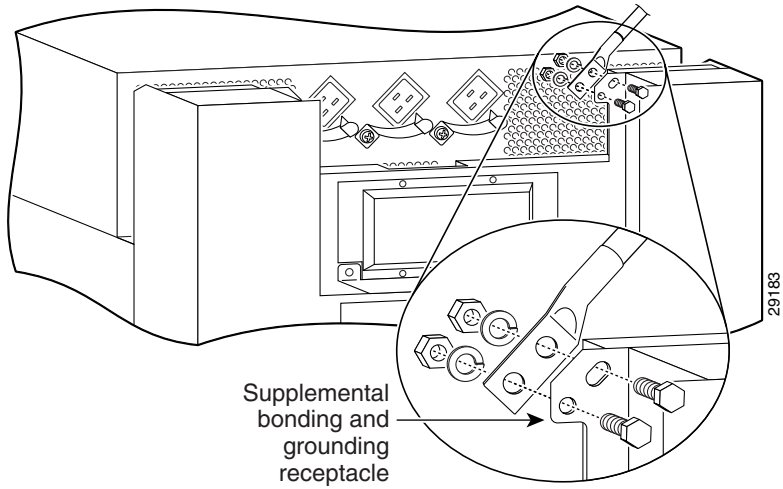

Step 2 Prepare the other end of the grounding wire and connect it to the appropriate grounding point at your site to ensure an adequate earth ground.

Attaching the Vertical Cable-Management Trough

Refer to Figure 3-14 and use the following procedure to attach the vertical cable-management trough.

Step 1 Position the trough so that the access gate opens toward the front of the chassis.

Step 2 Align the top screw holes on the inside panel of the trough with the chassis standoffs.

Step 3 Hand tighten two screws into the holes to hold the trough in place.

Step 4 Repeat Step 2 and Step 3 for the middle two standoffs and the bottom two standoffs.

Step 5 Tighten all six screws with a Phillips screwdriver to secure the trough to the chassis.

Figure 3-14 Attaching the Vertical Cable-Management Troughs

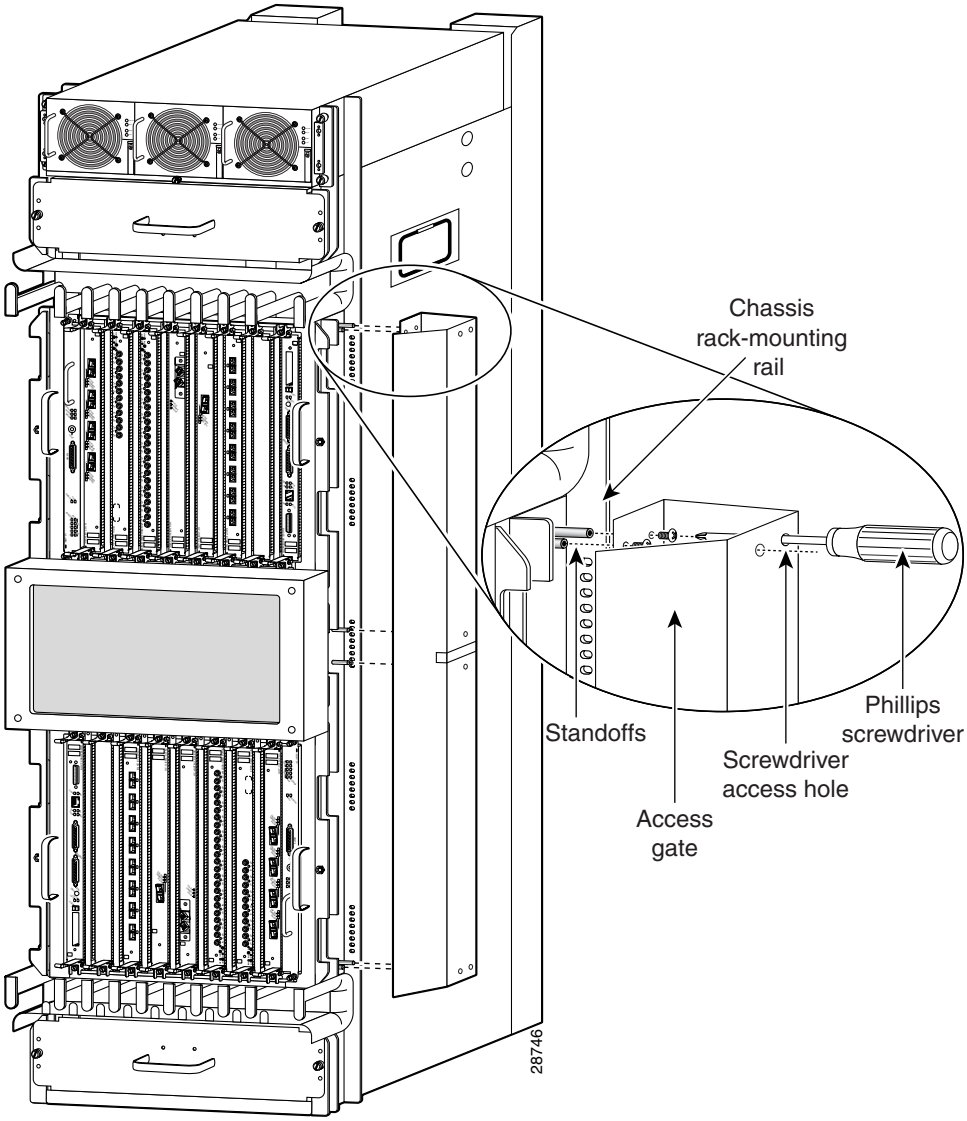

Connecting Line Card Network Interface Cables

This section describes how to route the network interface cables through the router cable-management system and attach the network interface cables to the line card ports.

This procedure uses an 8-port fiber-optic Fast Ethernet card as an *example* to describe how to attach a network interface cable to a line card port and route the cable through the cable-management system. Depending on which line cards are installed in your system, your cable connection procedure might differ slightly from this example. For cable connection information for your specific line card, refer to the installation and configuration note for that line card.

Note You can access the most current Cisco line card documentation on the World Wide Web at: http://www.cisco.com.

Use the following procedure as an example to route the network interface cables through the cable-management system and connect them to the line card.

Step 1 Route an interface cable across the horizontal cable-management tray, through the cable tray opening to connect it to the line card:

- For legacy fiber-optic line cards, go to Step 2.
- For current fiber-optic line cards, go to Step 6.

Step 2 Install a plastic bend-radius clip on the strain-relief ferrule on the connector (see blow-out in Figure 3-15).

Note The bag of bend-radius clips (Part Number 800-06119-01) in the accessories box that shipped with your router contains two sizes of bend-radius clips. The clip size is determined by the diameter of the strain-relief ferrule on the cable connectors. Use the size that provides the most secure fit on the strain-relief ferrule on the cable connectors in use at your site.

Step 3 Insert the cable connector into its assigned port.

Step 4 Route the cable up the cable-management bracket and carefully press the cable into the channel so it is held in place by the cable clips (Figure 3-15b).

Step 5 Repeat Steps 3 through 5 for each additional cable connection to that line card.

Figure 3-15 Connecting a Network Interface Cable to a Legacy Line Card

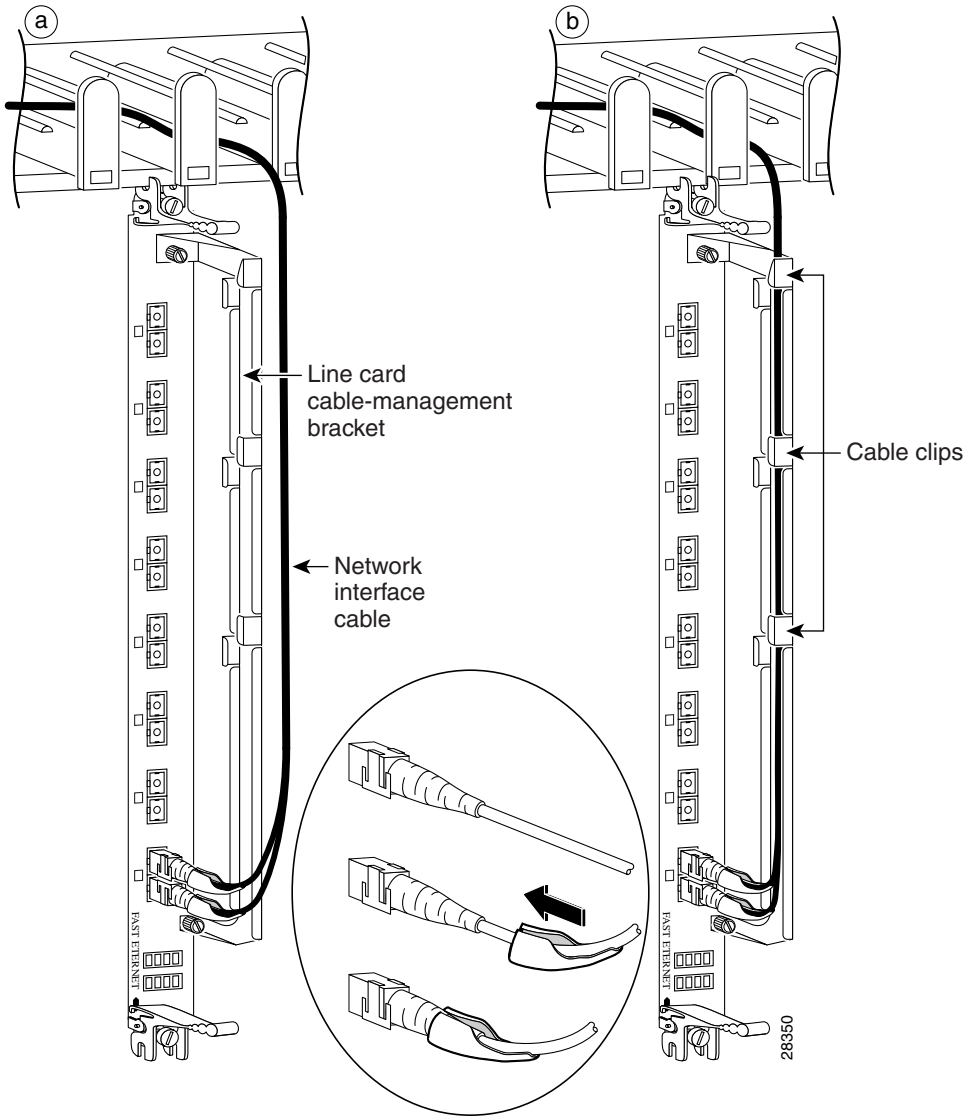

Step 6 Insert all cables into their assigned ports.

Step 7 Place several evenly spaced velcro straps through slots on the cable-management bracket (Figure 3-16a).

Step 8 Route the cables alongside the cable-management bracket and secure them with the velcro straps as appropriate (Figure 3-16b).

Caution Make sure the interface cables do not have any kinks or sharp bends which can destroy or degrade the ability of the optical fiber to propagate the signal-encoded beam of light accurately from one end of the cable to the other. Always allow adequate strain relief in the interface cable.

Figure 3-16 Current Style Cable Management Bracket

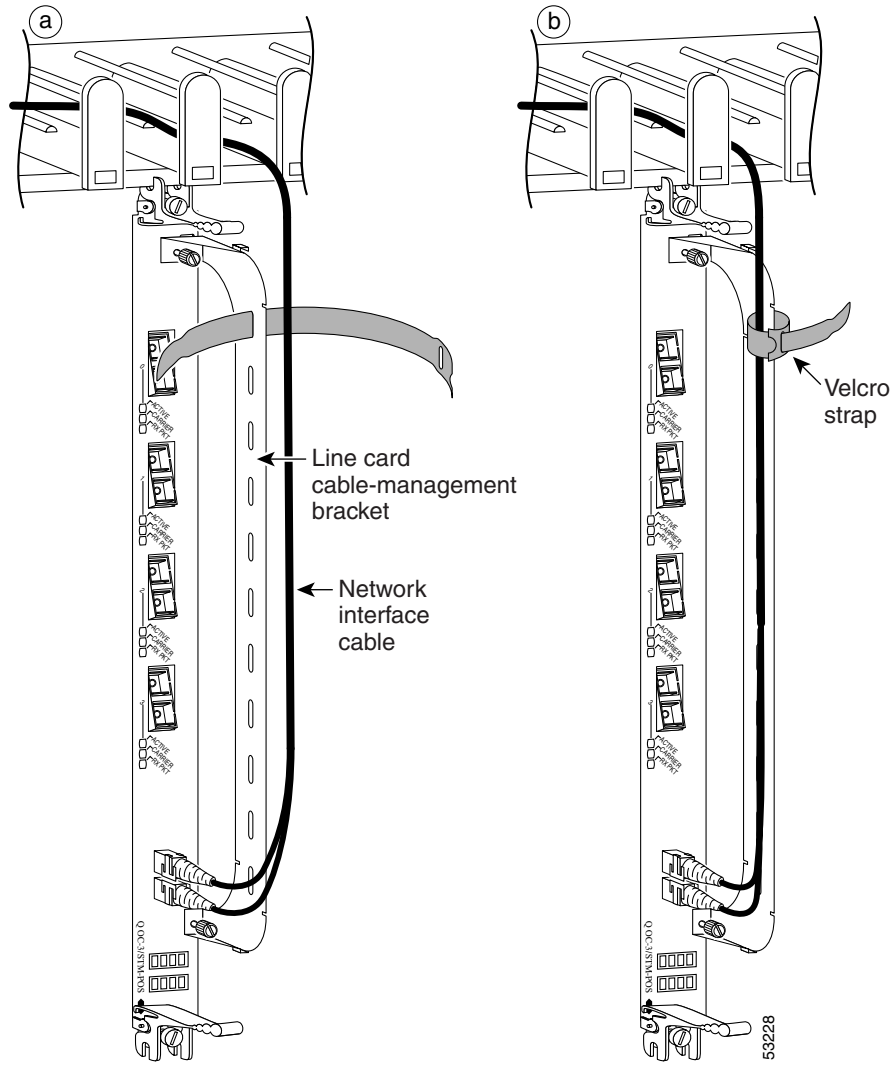

Connecting PRP Route Processor Cables

This section describes how to connect cables to the console, auxiliary, and Ethernet ports on the PRP. The console and auxiliary ports are both asynchronous serial ports; any devices connected to these ports must be capable of asynchronous transmission. For example, most modems are asynchronous devices.

Figure 3-17 shows an example of a data terminal and modem connections.

Figure 3-17 PRP Console and Auxiliary Port Connections

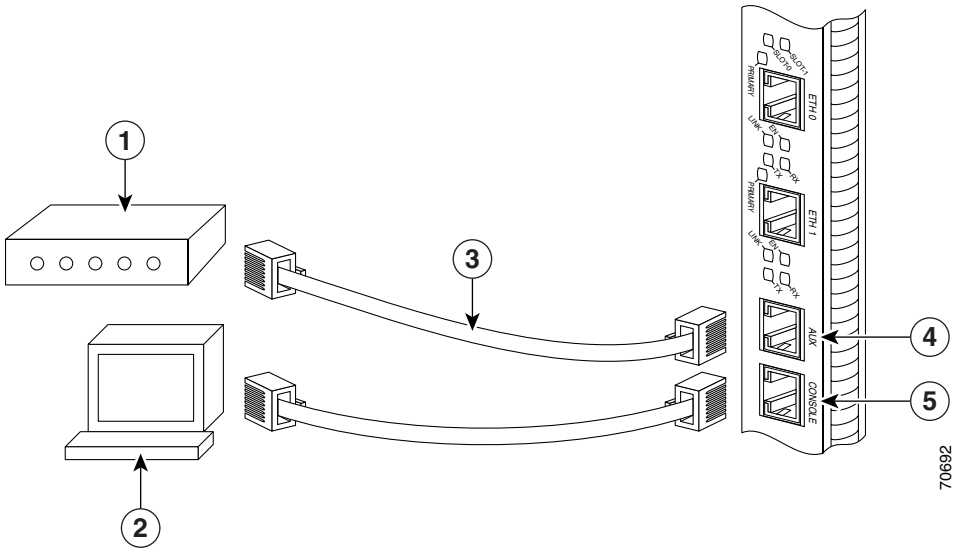

1	Modem	**4**	Auxiliary port
2	Console terminal	**5**	Console port
3	RJ-45 Ethernet cables		—

Caution The ports labeled Ethernet, 10BASE-T, Token Ring, Console, and AUX are safety extra-low voltage (SELV) circuits. SELV circuits should only be connected to other SELV circuits.

Note RP cables are not available from Cisco, but are available from any commercial cable vendor.

Note To comply with Telcordia GR-1089 NEBS standard for electromagnetic compatibility and safety, connect all console, auxiliary, Ethernet, and BITS (PRP2) interfaces only to intrabuilding or non-exposed wiring or cabling. The intrabuilding cable must be shielded and the shield must be grounded at both ends.

Connecting to the PRP Console Port

The system console port on the PRP is a DCE RJ-45 receptacle for connecting a data terminal to perform the initial configuration of the router. The console port requires an RJ-45 rollover cable.

See the "PRP Auxiliary and Console Port Connection Guidelines" section on page 2-24 for additional information about the console port.

Refer to Figure 3-17 and use the following procedure to connect a data terminal to the PRP console port.

Step 1 Set your terminal to these operational values: 9600 bps, 8 data bits, no parity, 2 stop bits (9600 8N2).

Step 2 Power off the data terminal.

Step 3 Attach the terminal end of the cable to the interface port on the data terminal.

Step 4 Attach the other end of the cable to the PRP console port.

Step 5 Power on the data terminal.

Connecting to the PRP Auxiliary Port

The auxiliary port on the PRP is a DTE, RJ-45 receptacle for connecting a modem or other DCE device (such as a CSU/DSU or another router) to the router. The asynchronous auxiliary port supports hardware flow control and modem control.

See the "PRP Auxiliary and Console Port Connection Guidelines" section on page 2-24 for additional information about the auxiliary port.

Refer to Figure 3-17 and use the following procedure to connect an asynchronous serial device to the PRP auxiliary port.

Step 1 Power off the asynchronous serial device.

Step 2 Attach the device end of the cable to the interface port on the asynchronous serial device.

Step 3 Attach the other end of the cable to the PRP auxiliary port.

Step 4 Power on the asynchronous serial device.

Connecting to the PRP Ethernet Ports

Two RJ-45 Ethernet interface receptacles on the PRP provide media-dependent interface (MDI) Ethernet ports. These connections support IEEE 802.3 and IEEE 802.3u interfaces compliant with 10BASE-T and 100BASE-TX standards. The transmission speed of the Ethernet ports is autosensing by default and is user-configurable.

The RJ-45 receptacles on the PRP provide two physical connection options for Ethernet interfaces. To connect cables to the PRP Ethernet interfaces (ports labeled ETH0 and ETH1), attach the Category 5 UTP cable directly to a RJ-45 receptacle on the PRP.

See the "PRP Ethernet Connections" section on page 2-28 for additional information.

Note RJ-45 cables are not available from Cisco Systems; they are available from outside commercial cable vendors. Use cables that comply with EIA/TIA-568 standards.

Caution Ethernet ports are primarily used as a Telnet port into the Cisco 12000 series router, and for booting or accessing Cisco IOS software images over a network to which an Ethernet port is directly connected. Cisco Express Forwarding (CEF) functions are switched off by default for security reasons. We strongly caution you to consider the security implications of switching on CEF routing functions on these ports.

Use the following procedure to connect an Ethernet cable to the PRP RJ-45 Ethernet receptacle.

Step 1 Plug the cable directly into the RJ-45 receptacle.

Step 2 Connect the network end of your RJ-45 cable to a switch, hub, repeater, DTE, or other external equipment.

Note The Ethernet interfaces on the PRP are endstation devices only, not repeaters.

Connecting an Alarm Card Cable

Each router alarm card has one 25-pin Dsub connector, labeled Alarm (Figure 3-18).

Figure 3-18 Alarm Card Cable Connection

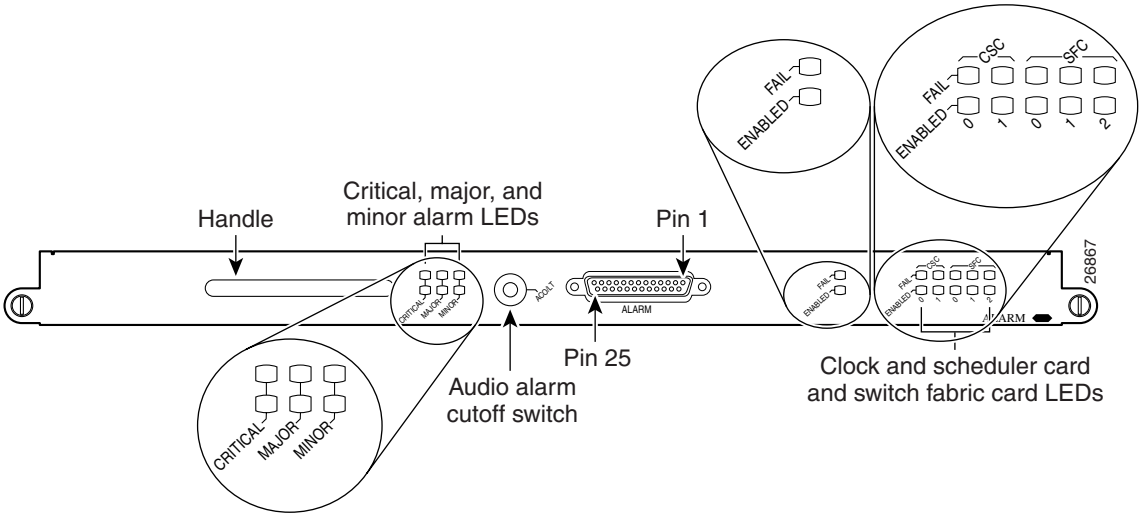

Alarm subconnectors can be used to connect the router to an external site alarm maintenance system. Any critical, major, and minor alarms generated by the router also energize alarm relays on the alarm card and activate the external site alarm. The alarm relay contacts on the alarm card consist of standard *common*, *normally open*, and *normally closed* relay contacts that are wired to the alarm connector pins.

Table 2-7 lists the pin-to-signal correspondence between the connector pins and the alarm card relay contacts. Because alarm contact cables are entirely dependent on installation site circumstances, alarm connector cables are not available from Cisco. For information about alarm connector wiring requirements and the pinouts for the alarm connector interface, see the "Alarm Card Connection Guidelines" section on page 2-33.

Caution Only safety extra-low voltage (SELV) circuits can be connected to the alarm connector. Maximum rating for the alarm circuit is 2 A, 50 VA.

Note To comply with Telcordia GR-1089 NEBS standard for electromagnetic compatibility and safety, you must use a shielded cable when connecting to the external alarm ports on the alarm card. The shielded cable is terminated by shielded connectors on both ends, with the cable shield material tied to both connectors.

Connecting Power to the Power Shelf

Use the one of the following procedures to connect power to your router.

- Connecting Power to the AC-Input Power Shelf, page 3-34
- Connecting Power to the DC-Input Power Shelf, page 3-35

Caution A router must be operated with all its power modules installed at all times for electromagnetic compatibility (EMC).

Connecting Power to the AC-Input Power Shelf

Use the following procedure to connect the AC power cords to the power shelf.

Note Connect each AC power supply to a dedicated power source (branch circuit). Each AC-input power supply operates between 200 and 240 VAC and requires at least a 20 A service for North American use, or a 13 A service for international use. For more information on AC power cords, see the "Power Connection Guidelines" section on page 2-16.

Step 1 Connect each AC power cord to the back panel of the power shelf and secure them in place with their retention clips (Figure 3-19).

Figure 3-19 Connecting AC Power Cords

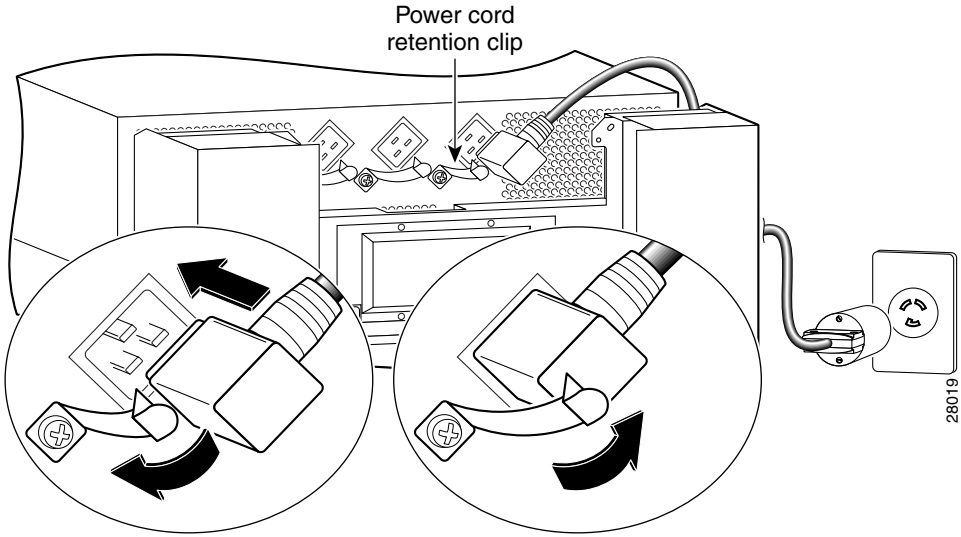

Step 2 Plug each power supply cable into its AC outlet.

Connecting Power to the DC-Input Power Shelf

This section contains the procedures to connect the DC source power cables to a DC-powered router.

The color coding of source DC power cable leads depends on the color coding of the site DC power source.

Because there is no color code standard for source DC wiring, you must be sure that power source cables are connected to the power shelf with the proper positive (+) and negative (–) polarity:

- In some cases, the source DC cable leads might have a positive (+) or a negative (–) label. This is a relatively safe indication of the polarity, *but you must verify the polarity by measuring the voltage between the DC cable leads*. Be sure that the positive (+) and negative (–) cable leads match the positive (+) and negative (–) labels on the power shelf when making the measurement.
- A green (or green and yellow) cable typically indicate that it is a ground cable.

Caution DC PEMs contain circuitry to trip the breaker on the PEM if the PEM detects a reverse polarity condition. No damage should occur from reverse polarity, but you should correct a reverse polarity condition immediately.

Note The length of the cables depends on the location of your router in relation to the source of DC power. These cables and the cable lugs used to attach the cables to the router chassis are not available from Cisco Systems. They are available from any commercial cable vendor. For more information on site power and source DC cable requirements, see the "Power Connection Guidelines" section on page 2-16.

Warning **To ensure that power remains off while you are performing this procedure, tape the DC circuit breaker switch in the off (0) position.**

Use the following procedure to connect DC power cables to the power shelf.

Step 1 Remove the cover over the cable terminal studs on the back panel of the power shelf (Figure 3-20):

a. Loosen (but do not remove) the screw that secures the cover.

b. Slide the cover down then pull the cover over the screw head and away from the PEM shelf.

Figure 3-20 DC-Input Terminal Connections on the DC-Input Power Shelf

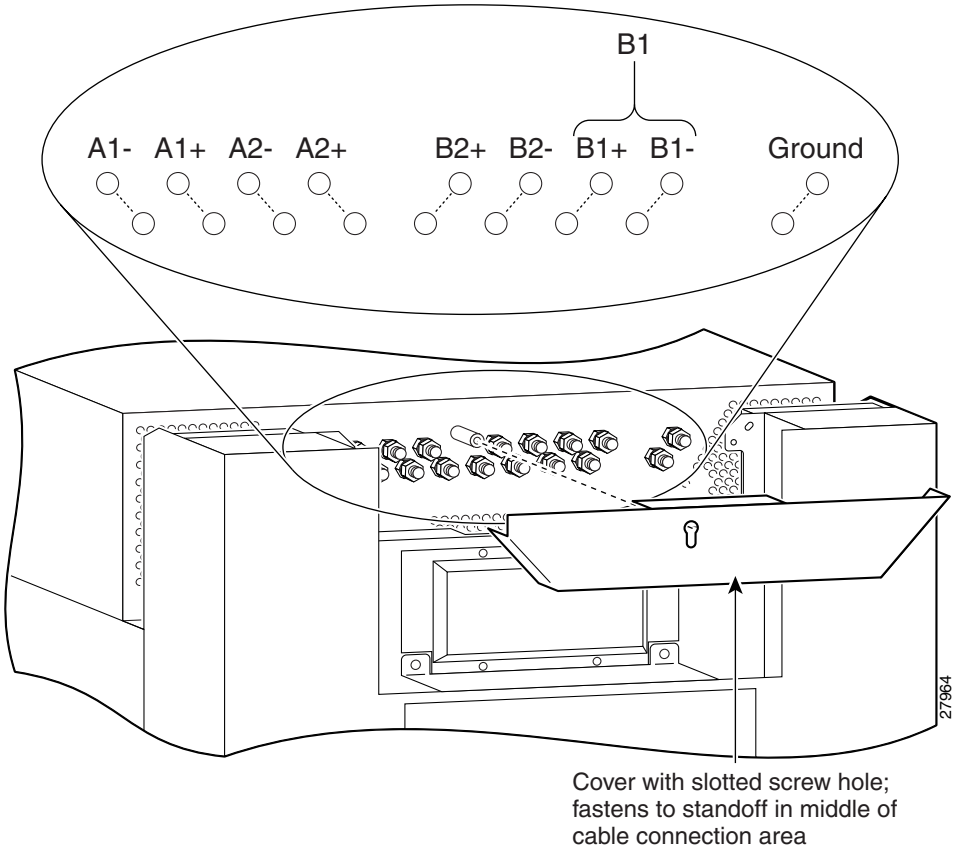

Step 2 Connect the ground and each pair of power cables to the DC-input terminal studs as follows (Figure 3-21):

Warning **When reconnecting source DC power cables, always connect the ground cable first.**

a. Connect the ground cable to the ground terminal studs.

   Beginning with terminal studs B2:

b. Connect the positive cable to the positive (+) terminal studs. For example: B2+.

c. Connect the negative cable to the negative (–) terminal studs. For example: B2-.

   Repeat steps **b** and **c** for the remaining pairs of terminal studs.

Figure 3-21 Reconnecting the Source DC Power Cables to the Power Shelf

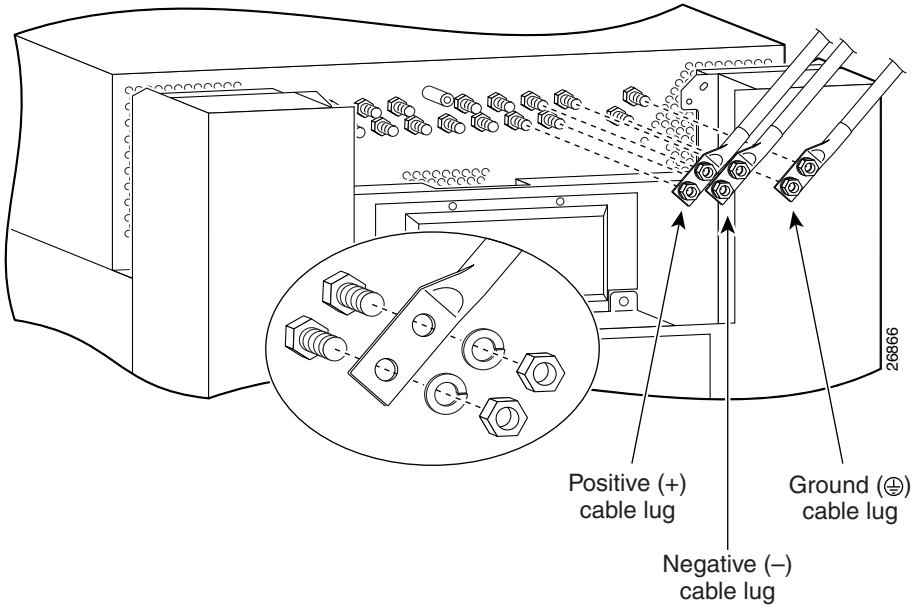

Step 3 Reinstall the power cable cover (Figure 3-22).

Figure 3-22 Reinstalling the Source DC Power Cable Cover

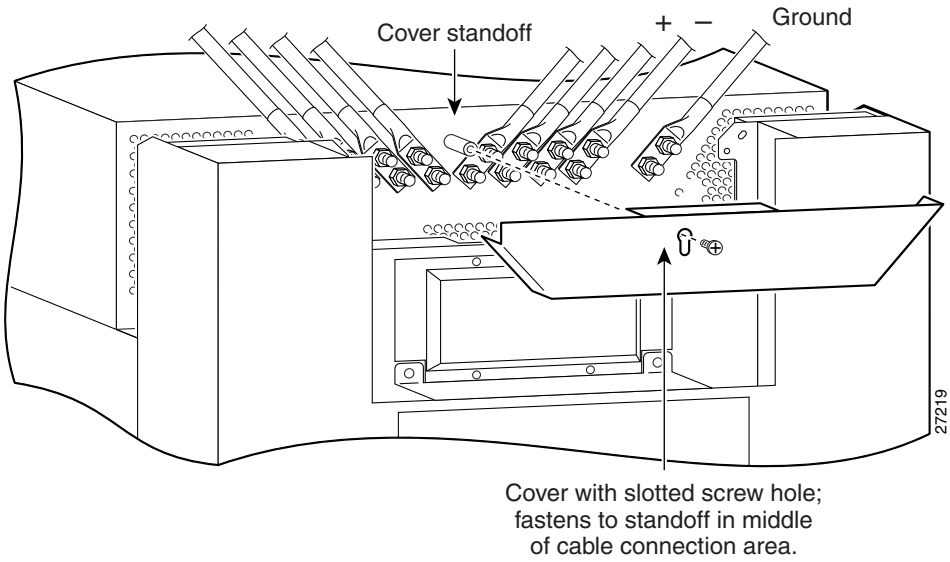

Installing the Front Covers

Refer to Figure 3-23 and use the following procedure to install the front cover for the router.

Step 1 Align the hinges on each side of the cover with the hinge connectors on each side of the chassis (see blowout in Figure 3-23).

Step 2 Push the front cover until the hinges snap into place.

Step 3 Repeat Step 1 and Step 2 for the remaining front cover.

Figure 3-23 Attaching the Front Covers

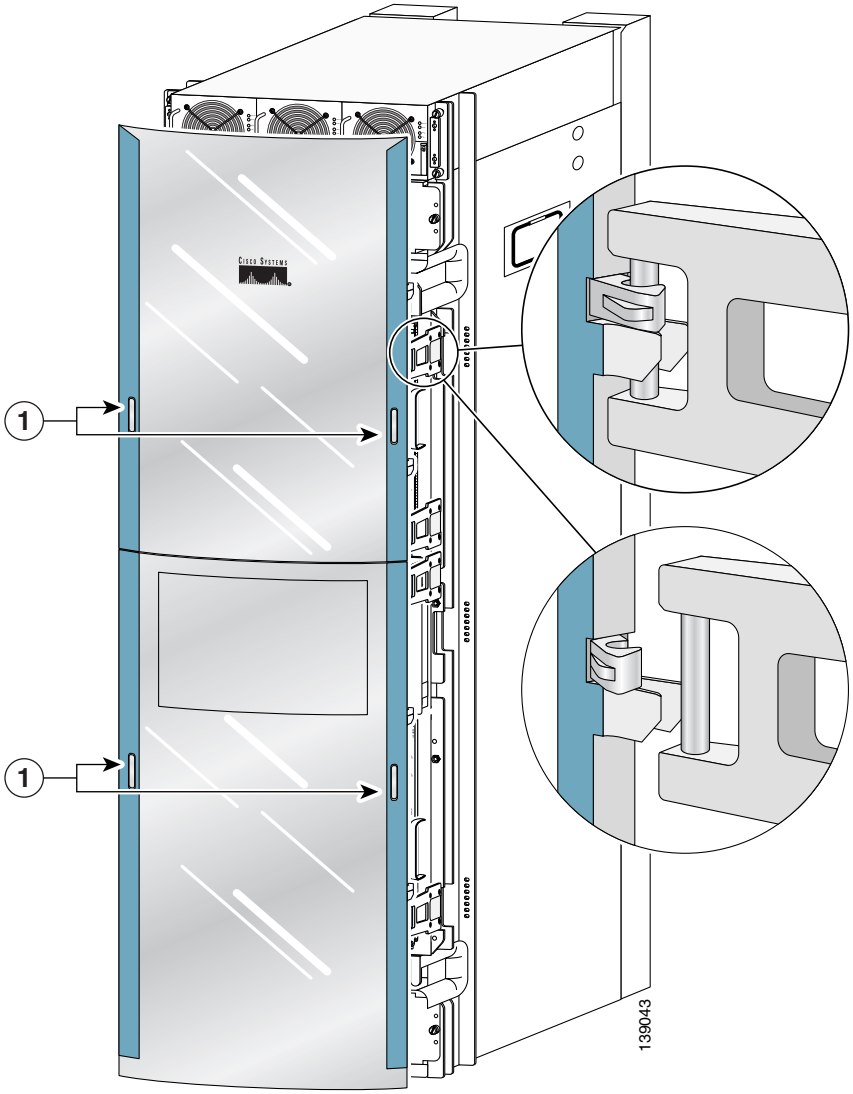

1	Release buttons

This completes the hardware installation procedures for Cisco XR 12416 router. Proceed to the next chapter to perform the initial router startup and basic configuration.

CHAPTER 4

Troubleshooting the Installation

This chapter contains general troubleshooting information to help isolate the cause of difficulties you might encounter during the installation and initial startup of the system.

The procedures in this chapter assume that the system is running the original configuration. If you altered the original hardware configuration or changed any default configuration settings, the recommendations in this chapter may not apply.

Although an overtemperature condition is unlikely at initial startup, environmental monitoring functions are included in this chapter because they also monitor internal voltages.

Troubleshooting the installation is presented in the following sections:

- Troubleshooting Overview, page 4-2
- Troubleshooting the Power Subsystem, page 4-5
- Troubleshooting the Processor Subsystem, page 4-16
- Troubleshooting the Switch Fabric, page 4-29
- Troubleshooting the Cooling Subsystem, page 4-34

Troubleshooting Overview

This section describes the methods used in troubleshooting the router. The troubleshooting methods are organized according to the major subsystems in the router.

If you are unable to solve a problem on your own, you can contact a Cisco customer service representative for assistance. When you call, have the following information ready:

- Date you received the router and the chassis serial number (located on a label on the back of the chassis).
- Installed line cards.
  - Use the **show hardware** command to determine which line cards are installed if possible.
- Cisco IOS software release number.
  - Use the **show version** command to determine this information if possible.
- Brief description of the symptoms and steps you have taken to isolate and solve the issue.
- Maintenance agreement or warranty information.

Troubleshooting Using a Subsystem Approach

To solve a system problem, try to isolate the problem to a specific subsystem. Compare current router behavior with expected router behavior. Because a startup issue is usually attributable to one component, it is most efficient to examine each subsystem, rather than trying to troubleshoot each router component.

For troubleshooting purposes in this chapter, the router consists of the following subsystems:

- Power subsystem—Includes the following components:
  - AC-input or DC-input power supplies, also called power entry modules (PEMs). The router chassis is shipped with fully-redundant PEMs installed in the chassis.

- Chassis backplane power distribution. –48 VDC power from the power supplies is transferred to the chassis backplane. The –48 VDC is distributed to all of the cards through the backplane connectors. The blower module receives power from the chassis backplane through a wiring harness and passes MBus data back to the chassis backplane.
- Processor subsystem—Includes redundant RPs, line cards, switch fabrics, and two alarm cards. The RP and line cards are equipped with onboard processors. The RP downloads a copy of the Cisco XR IOS image to each line card processor. The system uses an alphanumeric display (on each line card and RP) to display status and error messages, which can help in troubleshooting.
- Cooling subsystem—Consists of 2 blower modules, which circulate air through the card cages to cool the cards, and fan in each of the power modules, which circulates cooling air through the power module.

Normal Router Startup Sequence

You can generally determine when and where the router failed during the startup sequence by checking the status LEDs on the power modules, and the alphanumeric displays on the RP and line cards.

In a normal router startup sequence, the following sequence of events and conditions occur:

1. The fans in the blower module receive power and begin drawing air through the chassis.

   The blower module OK indicator is on.

2. The fan in each PEM receives power and begins drawing air through the power supply.

   The power supply Pwr OK indicator is on.

3. As the power on and boot process progresses for the RP and each installed line card, the status of each card appears on the alphanumeric display on the front panel of the card:

   – The upper row of the display is powered by the DC-to-DC converter on the card.

   – The lower row of the display is powered by the +5 VDC provided through the backplane.

Identifying Startup Issues

Table 4-1 shows the contents of the alphanumeric displays on the RP and the line cards, as well as the normal LED states on the alarm card, the power modules (AC or DC), and the blower modules after a successful system startup.

Table 4-1 Alphanumeric Displays and LEDs at System Startup

Component	Type of Indicator	Display Contents/LED Status and Meaning
RP	Alphanumeric display	Upper row: MSTR Lower row: PRP The RP is enabled and recognized by the system; a valid Cisco IOS software image is running.
Line Cards	Alphanumeric display	Upper row: IOS Lower row: RUN The line card is enabled and ready for use.
Alarm Cards	Detected alarm severity	Critical: Off Major: Off Minor: Off
	Alarm card	Enabled: On Fail: Off
	CSC 0 and 1	Enabled: On Fail: Off
	SFC 0, 1, 2, and 3,	Enabled: On Fail: Off
AC Power Supplies	Power status	PWR OK: On FAULT: Off TEMP: Off OC: Off The correct power module voltages are present and no faults have been detected.

Table 4-1 Alphanumeric Displays and LEDs at System Startup (continued)

Component	Type of Indicator	Display Contents/LED Status and Meaning
DC Power Supplies	Power status	PWR OK: On FAULT: Off TEMP: Off OC: Off The correct power module voltages are present and no faults have been detected.
Blower Modules	Blower status	OK: On FAIL: Off

Troubleshooting the Power Subsystem

This section contains information to troubleshoot the power subsystems:

- Troubleshooting an AC Power Supply, page 4-5
- Troubleshooting an AC Power Shelf Installation, page 4-9
- Troubleshooting a DC Power Supply, page 4-10
- Troubleshooting the Power Distribution System, page 4-15

Troubleshooting an AC Power Supply

AC-input power supplies are monitored for internal temperature, voltage, and current load by the MBus module on the alarm cards, and by the master MBus module on the RP. If the router detects an extreme condition, it generates an alarm on the alarm card and logs the appropriate warning messages on the console.

Figure 4-1 identifies the components of the AC power supply.

Figure 4-1 AC Power Supply Components

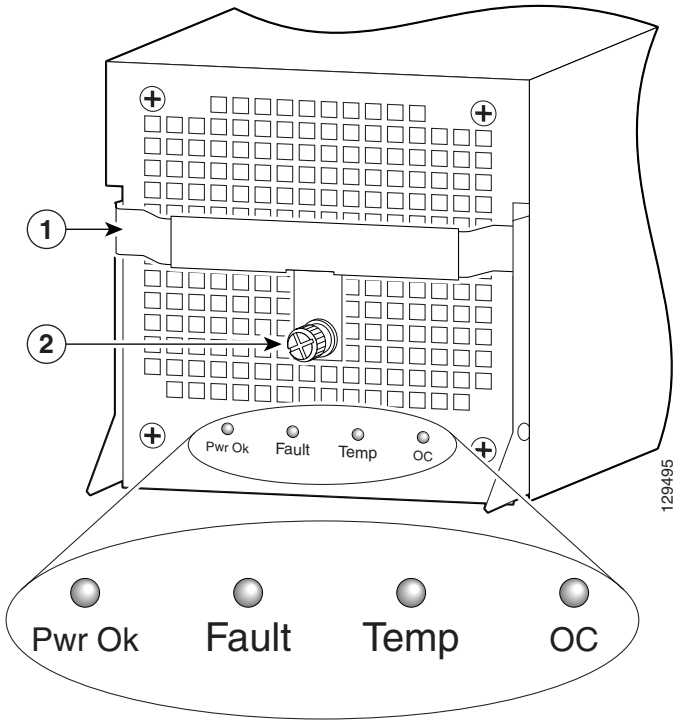

1	Ejector handle	**2**	Captive screw

Use the following procedure to troubleshoot the AC power supply if it is not operating properly after installation.

Step 1 Make sure the power supply is seated properly:

- Eject and reseat the PEM. Check that:
  - The ejector lever is locked into place by its captive screw on the ejector lever is tightened securely.

Step 2 Make sure the router is powered on and that all power cords are connected properly:

- Power cords on the back panel of the power shelf are secured in place with their retention clips.
- Power cords at the power source end are securely plugged into their own AC power outlet.
- The source AC circuit breaker is switched on.

Step 3 Check the power supply status LED indicators:

- PWR OK (green)—Indicates the power supply is operating normally, and the source AC voltage is within the nominal operating range of 200 VAC to 240 VAC. This indicator lights when the power supply is properly seated in position.
- FAULT (yellow)—Indicates the system detected a fault within the power supply or the incoming voltage is too low. This indicator remains off during normal operation.

  If the indicator is on:

  - Check that the source voltage is within the correct range: 170 to 262 VAC
  - Remove and then apply power to the power supply by disconnecting its power cord. If the indicator remains on, replace the existing power supply with a spare.
  - If the spare power supply also fails, the problem could be a faulty power shelf backplane connector. Power off the router and contact a Cisco service representative for assistance.
- TEMP (yellow)—Indicates that the power supply is in an overtemperature condition, causing a shut-down to occur.

  Note If the temp indicator is on, the fault indicator is also on.

  - Verify that the power supply fan is operating properly.
  - Verify that the blower modules are operating properly.
  - If the power supply fan and blower modules are operating properly, replace the existing power supply with a spare.

- TEMP (flashing yellow)—Indicates that a power supply fan is locked or malfunctioning.

  Note If the temp indicator is flashing, the fault indicator also goes on.

  - Check to see if the fan is operating. Remove any obstructions to the fan.
  - If the fan is not operating, replace the power supply.
- OC (steady, or flashing yellow after 10 seconds)—Indicates the output current of the power supply has exceeded its limit and that an overload or short has occurred.

  Note If the OC indicator is on or flashing, the fault indicator also goes on.

  - Remove and then apply power to the power supply by disconnecting its power cord.
  - If the indicator remains on, try reseating the power supply.
  - If the indicator remains on, replace the power supply.

Because both the standard and optional AC-input power subsystems use redundant power supplies, a problem with the DC output voltage to the backplane from only one power supply should not affect router operation. Because the router is equipped with multiple AC power supplies, it powers on and operates even if one power supply fails.

Troubleshooting an AC Power Shelf Installation

Use the following procedure to troubleshoot an AC power shelf if it does not operate properly after installation.

Step 1 Make sure that the power shelf is seated properly:

- The jackscrew is tightened securely.
- The captive screws on the flanges are tightened securely.

Step 2 Make sure each power supply is seated properly:

- The ejector lever is locked into place by its spring clip.

If the power shelf is still not operating properly, go to "Troubleshooting an AC Power Supply" section on page 4-5.

Troubleshooting a DC Power Supply

DC-input power supplies are monitored for internal temperature, voltage, and current load by the MBus module on the alarm cards, and by the master MBus module on the RP. If the router detects an extreme condition, it generates an alarm on the alarm card and logs the appropriate warning messages on the console.

Figure 4-2 identifies the components of a DC power supply.

Figure 4-2 DC Power Supply Components

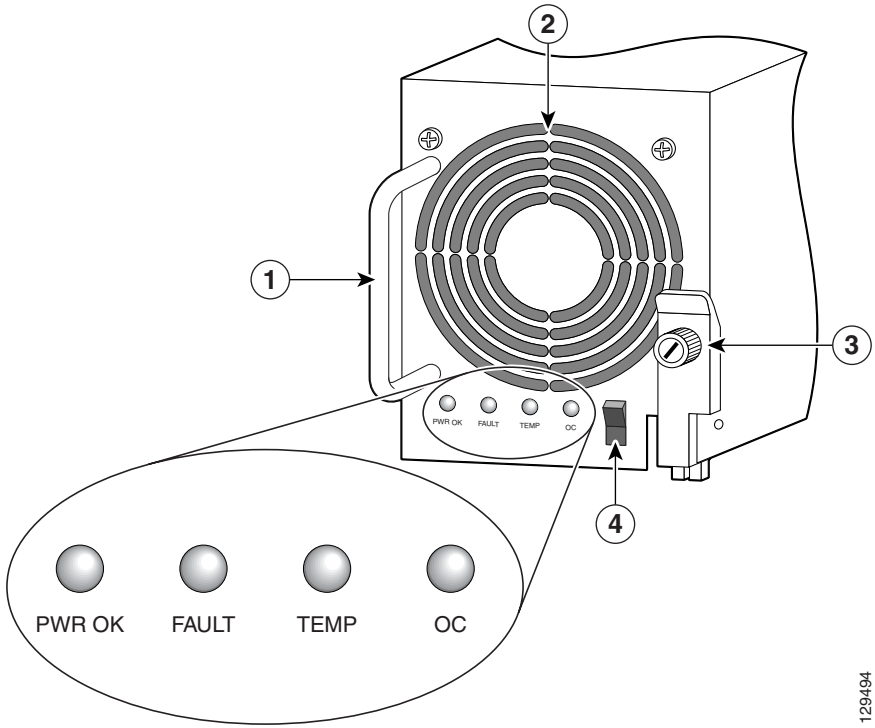

1	Handle	**3**	Ejector lever
2	Fan	**4**	Power switch

Use the following procedure to troubleshoot the DC PEM if it is not operating properly after installation.

Step 1 Make sure the PEM is seated properly:

- Eject and reseat the PEM. Make sure:
  - The captive screw on the ejector lever are tightened securely.
  - The power switch is in the on (1) position.

Step 2 Make sure the router is powered on and that all power cords are connected properly. Check that:

- Power cables are securely connected to their terminal studs on the back panel.
- Power cables are connected to a dedicated 60 A DC service.
- The source DC circuit breaker is switched on.

Step 3 Check the PEM status indicators:

- PWR OK (green) — Indicates that the PEM is operating normally, and the source DC voltage is within the nominal operating range of –48 to –60 VDC. This indicator should light when the PEM circuit breaker is switched on.
- FAULT (yellow) — Indicates that the system has detected a fault within the PEM or the incoming voltage is too low. This indicator remains off during normal operation.
  - Check that the source voltage is within the correct range: –40.5 to –75 VDC.
  - Toggle the PEM circuit breaker off and then on. If the indicator remains on after several attempts to power it on, replace the existing PEM with a spare.
  - If the spare PEM also fails, the problem could be a faulty power shelf backplane connector. Power off the router and contact a Cisco service representative for assistance.

- TEMP (yellow)—Indicates that the PEM is in an overtemperature condition causing a shut-down to occur.

  Note If the temp indicator is on, the fault indicator also goes on.

  - Verify that the power supply fan is operating properly.
  - Verify that the blower modules are operating properly.
  - If the power supply fan and the blower modules are operating properly, replace the existing PEM with a spare.
- TEMP (flashing yellow)—Indicates that a power supply fan is locked or malfunctioning.

  Note If the temp indicator is flashing, the fault indicator is also on.

  - Check to see if the fan is operating. Remove any obstructions to the fan.
  - If the fan is not operational, replace the power supply.
- OC (steady, or flashing yellow after 10 seconds)—Indicates the output current of the power supply has exceeded its limit and that an overload or short circuit has occurred.

  Note If the OC indicator is on or flashing, the fault indicator also goes on.

  - Remove and then apply power to the power supply by disconnecting its power cord.
  - If the indicator remains on, try reseating the power supply.
  - If the indicator remains on, replace the power supply.

Because there are redundant power supplies, a problem with the DC output voltage to the backplane from only one PEM should not affect router operation. Because the router is equipped with multiple DC power supplies, it powers on and operates even if one power supply fails.

Troubleshooting a DC Power Shelf Installation

Use the following procedure to troubleshoot the DC power shelf if it is not operating properly after installation.

Step 1 Make sure that the power shelf is seated properly:

- The jackscrew is tightened securely.
- The captive screws on the flanges are tightened securely.

Step 2 Make sure each power supply is seated properly:

- Eject and reseat the PEM.
- The captive screw on the ejector lever is tightened securely.
- The power switch is in the on (1) position.
- If the power shelf is still not operating properly, go to "Troubleshooting a DC Power Supply" section on page 4-10

Additional Power Subsystem Troubleshooting Information

This section contains additional troubleshooting information to help you isolate the cause of a power problem.

The MBus modules powering the alphanumeric displays on the RP and line cards are powered by +5 VDC from the backplane. The blower modules use –48 VDC from the backplane. If both the RP and the blower modules are operating, all internal correct DC voltages are present.

Enter the **show environment** command at the user EXEC mode prompt to display temperature and voltage information for each installed card, blower module, and PEM as shown in this example:

```
router#show environment
Slot #  Hot Sensor      Inlet Sensor
         (deg C)          (deg C)

1          38.0             32.5
3          36.5             39.0
5          37.0             37.0
7          36.0             32.0
16         26.0             26.0
17         27.5             27.5
18         27.0             27.5
19         0.0     0.0
20         27.0             27.5
21         28.0             28.0
22         28.0             28.0
24         47.0             NA
29         NA               22.0

Slot #  PEM Over Temperature Sensors

24      PEM1    OK
        PEM2    OK
Slot #  Hot Sensor      Inlet Sensor
         (deg C)          (deg C)

29         NA               22.0

Slot #  3V      5V      MBUS 5V
        (mv)    (mv)    (mv)

1       3296    5016    5048
3       3284    4976    5000
5       3308    5008    5048
7       3296    5016    5000
16      3300    NA      5064
17      3308    NA      5064
18      3292    NA      5056
19      3300    NA      5072
20      3288    NA      5056
21      3296    NA      5072
22      3292    NA      5064
24      NA      NA      5096
29      NA      NA      4920
```

```
Slot #          48V     AMP_48
                (Volt)  (Amp)

24      PEM1    56      2
        PEM2    55      2
Slot #  Fan 0   Fan 1   Fan 2
        (RPM)   (RPM)   (RPM)

29      3021    3090    2997
```

Troubleshooting the Power Distribution System

The power distribution system consists of:

- AC or DC PEMs which supply –48 VDC to the backplane,
- The chassis backplane which carries voltage to chassis components.
- DC-to-DC converters which convert –48 VDC from the backplane to the correct voltages required by the line cards.

Use the following procedure to troubleshoot the power distribution system.

Step 1 Check each power supply to make sure that:

- The ejector lever is fully closed and properly secured by the its captive screw.
- The PWR OK indicator is on.
- The FAULT and TEMP indicators are both off.
- The OC indicator is off.

If the power supplies meet the above criteria, then the correct source power is present and within tolerance. The power supplies are functioning properly.

Step 2 Make sure the blower modules are operating.

- If the blower modules are functioning, then the –48 VDC from the chassis backplane and the cables from the backplane to the blower modules are functioning properly.
- If a blower module is not functioning, there may be a problem with either the blower module itself, or the –48 VDC power supplied to the blower module. Eject and reseat the blower module.
- If a blower module is still not operating there could be a problem with the blower module controller card or cable. Replace the blower module.

  Contact your Cisco representative if replacing the blower module does not fix the problem.

Troubleshooting the Processor Subsystem

The router processor subsystem consists of the RPs, line cards, and alarm cards. The RPs and line cards have two onboard processors; one serves as the main (or master processor), and the other serves as the MBus module processor. The MBus module processor monitors the environment and controls the onboard DC-to-DC converters.

Note A minimally configured router must have an RP installed in slot 7 of the upper card cage. If the router is equipped with an optional, redundant RP, that RP must be installed in the far left slot in the lower card cage (slot 8).

This section contains information to troubleshooting the processor subsystem, including:

- Troubleshooting the RP, page 4-17
- Troubleshooting the Line Cards, page 4-26
- Troubleshooting Using the Alarm Cards, page 4-27

Troubleshooting the RP

When the router is powered on, the alphanumeric display on the RP indicate the following (Figure 4-3):

- Upper row—Indicates which RP software component is running. At the end of a successful boot process, this display reads MSTR.
- Lower row—Indicates the current phase of the boot process. At the end of a successful boot process, this display reads PRP.

Figure 4-3 RP Alphanumeric Display

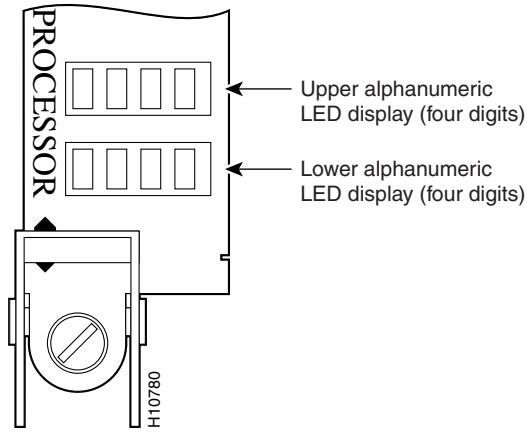

Troubleshooting Using the RP Alphanumeric Display

You can use the alphanumeric display to isolate a problem with the RP. The two rows on the alphanumeric display are powered separately:

- The upper row receives power from the DC-to-DC converters on the RP.
- The lower row is powered directly from the MBus on the RP through the chassis backplane.
  - If the lower row is not operating, the MBus module may be malfunctioning.
  - If the MBus module is operating, the lower row could be on even if the RP failed to powered on.
- If neither the upper nor the lower row is on, but the power modules and the blower modules are operational, the RP may not be installed properly, or the +5 VDC output from the chassis backplane is faulty.
  - Make sure that the system is powered on.
  - Initialize the RP by ejecting it from the chassis backplane and then reseating it.

Caution The soft reset (NMI) switch is *not* a mechanism for resetting the RP and reloading the Cisco IOS image. It is intended for software development use. To prevent system problems or loss of data, use the soft reset switch *only* when instructed by a Cisco certified service representative.

- If both the upper and the lower displays are operating, check the meaning of the messages (see Table 4-2).

  When the DC-to-DC converters are powered-on by the MBus module, the RP processor begins the boot process and displays various status messages. Some messages appear briefly; while others appear for several seconds. If the messages appear to stop at a particular point, the boot process may be halted.
  - Make a note of the message.
  - Turn off power to the router, then turn on the power again to reset the router and start the boot process. If the router halts again, replace the RP (see "Removing and Replacing RP and Line Cards from the Upper and Lower Card Cages" section on page 5-46).

Table 4-2 Troubleshooting Using the RP Alphanumeric Display Messages

Message	Description
LMEM TEST	Running low memory test
LCAH TEST	Initializing lower 15K cache
BSS INIT	Initializing main memory for ROM
NVRAM INIT	Initializing NVRAM
EXPT INIT	Initializing interrupt handlers
TLB INIT	Initializing TLB
CACH INIT	Initializing CPU data and instruction cache
CACH PARY	Enabling CPU cache parity
MEM INIT	Initializing main memory
NVRAM SIZE	Detecting the NVRAM size
PCMC INIT	Initializing the PCMCIA
EXIT INIT	Exiting the initialization sequence
IOS UP	Running Cisco XR IOS software

The RP has 8 device or port LED activity indicators that show the status of the Ethernet connections (Figure 4-4).

Figure 4-4 RP LEDs

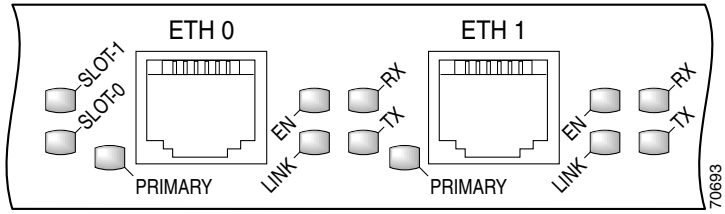

LINK	Indicates link activity
EN	Indicates the port is enabled
TX	Indicates data transmission
RX	Indicates data reception

The RJ-45 port LEDs on the RP indicate:

- Which Flash memory card slot is active.
  - Each LED lights when its corresponding PCMCIA slot is accessed (SLOT 0 and SLOT 1).
- Which Ethernet connection is in use.
  - 4 RJ-45 Ethernet port activity LEDs indicate link activity (LINK), port enabled (EN), data transmission (TX), and data reception (RX).
- What is occurring on the Ethernet interface.
  - 2 Ethernet port-selection LEDs (labeled PRIMARY) identify which of the Ethernet connections are selected. Because both ports are supported on the PRP, the LED on port ETH0 is always on. The LED on port ETH1 lights when it is selected.

PRP-3 Alphanumeric LEDs

The following section discusses the alphanumeric LED messages and the console output displayed in sequence for a single PRP-3 and for dual PRP-3. The alphanumeric LED messages help in identifying the state of the route processor and accordingly troubleshooting the problems faced.

Single PRP-3 Scenario

Table 4-3 displays the alphanumeric LED messages and the console output when the chassis is powered on or when the PRP-3 board is inserted into the slot.

Table 4-3 Single PRP-3 Alphanumeric Display LED—Chassis Is Powered ON/Inserting PRP-3

LED Display	Description or Console Message
02A8/HW OK/RIO	Immediately when the board is powered on.
OK/CPU SENT/RPT	Displays "1.330GHz dual-core MPC8641D Rev 2.1, 532MHz MPXclk".
INIT/MEM	Displays "Discovering memory in slot DIMM1 ..... Found 2GB DIMM Discovering memory in slot DIMM2 ..... Found 2GB DIMM"
TEST/MEM	Displays "Testing low memory ..... OK Loading main ROMMON image ..... OK Verifying loaded image ..... OK Load succeeded; launching target ..... OK"
LNCH/RMON	Displays “Cisco ROMMON System Bootstrap, Version 0.16.0 (bld1) DEVELOPMENT SOFTWARE Compiled on 08/27/08 at 15:04:49 PDT [BLD-rommon] Copyright (c) 1994-2008 by Cisco Systems, Inc. MPC8641D platform with 4 GB of main memory"
RDY/RP	DISPLAYS "Loading disk0:c12k-os-mbi-3.8.0.15I/mbiprp-rp.vm (14809672 bytes)... !!!"

LED Display	Description or Console Message
RUN/IOX	Displays “RP/0/2/CPU0:Sep 10 15:56:29.018: syslogd_helper: [84]: dsc_event_handler: Got SysMgr dSC event : 1 RP/0/2/CPU0:Jan 1 00:00:04.809 : mbus-prp3[58]: mbus-prp3: mbus_platform_init() failed (0x6). RP/0/2/CPU0:Sep 10 15:56:07.015 : dumper[53]: No HDD Controller found by process dumper RP/0/2/CPU0:Sep 10 15:56:21.538 : sysmgr[85]: %OS-SYSMGR-5-NOTICE : Card is COLD started RP/0/2/CPU0:Sep 10 15:56:22.622 : dsc[169]: Memory Sanity Check Enabled RP/0/2/CPU0:Sep 10 15:56:29.007 : dsc[169]: %PLATFORM-DSC-3-ERR_I_AM_DSC : Setting myself as DSC RP/0/2/CPU0:Sep 10 15:57:20.071 : sysldr[370]: %PLATFORM-POWERMGR-3-ROM_ERROR_STATUS : Unable to get Mbus ROM status from SYSDB. Error ='sysdb' detected the 'warning' condition 'A SysDB client tried to access a nonexistent item or list an empty directory' RP/0/2/CPU0:Sep 10 15:57:25.078 : sysldr[370]: % PLATFORM-SYSLDR-6-INFO : Waiting for startup config to be applied before booting LCs Primary Clock is CSC_1 Fabric Clock is Redundant Bandwidth Mode : Full Bandwidth”
RP/ACTV	When RP is up and running Cisco IOS XR software.

Table 4-4 displays the alphanumeric LED messages and the console output when the chassis is loaded from ROMMON.

Table 4-4 Single PRP-3 Scenario — Chassis loaded from ROMMON

LED Display	Description or Console Message
INIT/NV	Displays the LED message during the initialization of the NVRAM infra code.
OK/RIO	Displays the LED message immediately when the board is powered ON.
OK/CPU	Displays "1.330GHz dual-core MPC8641D Rev 2.1, 532MHz MPXclk".
CONT...	

Dual PRP-3 Scenario

If dual PRP-3 is installed and the chassis is powered on or a board is inserted, all the LED messages are the same as for a single PRP-3, except for an LED message ‘1404/MRAM’ that is displayed on the front panel when the console display is as follows:

```
Use, duplication, or disclosure by the Government is
subject to restrictions as set forth in subparagraph
(c) of the Commercial Computer Software - Restricted
Rights clause at FAR sec. 52.227-19 and subparagraph
(c) (1) (ii) of the Rights in Technical Data and Computer
Software clause at DFARS sec. 252.227-7013.
           cisco Systems, Inc.
           170 West Tasman Drive
           San Jose, California 95134-1706
Cisco IOS XR Software for the Cisco XR PRP, Version 3.8.0.15I
Copyright (c) 2008 by Cisco Systems, Inc.
RP/0/2/CPU0:Sep 10 16:34:19.351: syslogd_helper: [84]:
dsc_event_handler: Got SysMgr dSC event : 1
```

Tip The LED message “I404/MRAM” is displayed between RDY/RP and RUN/IOX alphanumeric messages.

Table 4-5 displays the LED alphanumeric messages on a standby PRP-3, if the current active PRP-3 is reloaded.

Table 4-5 Dual PRP-3 Scenario

LED Display	Description or Console Message
INIT/NV	Displays the LED message during the initialization of the NVRAM infra code.
02A8/HW OK/RIO	LED message displayed immediately after the board is powered on.
OK/CPU SENT/RPT	Displays "1.330GHz dual-core MPC8641D Rev 2.1, 532MHz MPXclk".
INIT/MEM	Displays "Discovering memory in slot DIMM1 ..... Found 2GB DIMM Discovering memory in slot DIMM2 ..... Found 2GB DIMM"
TEST/MEM	Displays "Testing low memory ..... OK Loading main ROMMON image ..... OK Verifying loaded image ..... OK Load succeeded; launching target ..... OK"
LNCH/RMON	Displays “Cisco ROMMON System Bootstrap, Version 0.16.0 (bld1) DEVELOPMENT SOFTWARE Compiled on 08/27/08 at 15:04:49 PDT [BLD-rommon] Copyright (c) 1994-2008 by Cisco Systems, Inc. MPC8641D platform with 4 GB of main memory"
RDY/RP or PWRD	DISPLAYS "Loading disk0:c12k-os-mbi-3.8.0.15I/mbiprp-rp.vm (14809672 bytes)... !!!" **Tip** Instead of RDY/RP, sometimes PWRD is displayed in the normal booting process.

LED Display	Description or Console Message
RUN/MBI	Displays “Copyright (c) 2008 by Cisco Systems, Inc. Install (Node Preparation): Install device root is /disk0/ Install (Node Preparation): Using boot device sequence compactflash: from rommon Install (Node Preparation): Trying device disk0: Install (Node Preparation): Checking size of device disk0: Install (Node Preparation): OK Install (Node Preparation): Checking free space on disk0: Install (Node Preparation): OK Install (Node Preparation): Starting package and meta-data sync Install (Node Preparation): Cleaning packages not in sync list Install (Node Preparation): Complete Install (Node Preparation): Syncing package/meta-data contents: /disk0/instdb/ldpath Install (Node Preparation): Please Wait... Install (Node Preparation): Completed syncing: /disk0/instdb/ldpath Install (Node Preparation): Syncing package/meta-data contents: /disk0/instdb/ldpath.committed Install (Node Preparation): Please Wait... Install (Node Preparation): Completed syncing: /disk0/instdb/ldpath.committed Install (Node Preparation): Completed sync of all packages and meta-data.”
RP/STBY	ios con0/2/CPU0 is in standby

Troubleshooting the Line Cards

As each line card powers on, a power-on self-test (POST) is performed on the line card memory. A full set of field diagnostics can also be run on a line card from the system console providing a pass/fail message both in the line card alphanumeric LED display and on the system console.

Check the following to help isolate a problem with the line cards:

- Are both banks of alphanumeric LED displays on?
  - The two displays are powered separately. The left display receives power from the DC-DC converter on the line card. The right display is powered directly from the power supply. So, even if the line card has not powered up, the right display could be on. If both displays are off, the line card might not be fully plugged into the backplane connector, there might be a problem with the MBus module on the line card, or the system power supply may be off.
  - If both displays are on, check the message being displayed. As soon as the DC-DC converter is turned on by the MBus module, the processor on the line card begins the boot process. Status messages are displayed in the alphanumeric displays as the boot process continues on the line card.

The system attempts to boot identical line cards in parallel. Further, the system boots line cards as soon as they are powered on and become available for backup.

During the line card boot process, which occurs immediately after the RP boot process, you can observe the alphanumeric LED displays on each line card. For additional information about the displays and definitions, see the Cisco IOS XR Troubleshooting Guide (see Obtaining Documentation and Submitting a Service Request, page -xiv).

Troubleshooting Using the Alarm Cards

The router is equipped with two alarm cards:

- One card occupies the dedicated far left slot of the upper card cage.
- A second alarm card occupies the dedicated far right slot of the lower card cage.

In both card cages, the alarm card slot differs from the rest of the card cage slots in that it is labeled to identify it as an alarm card slot, it is physically narrower, and has a different backplane connector.

The following components and indicators are on the front panel of the alarm cards (Figure 4-5):

- Critical (red), Major (red), and Minor (yellow) indicators that identify system level alarm conditions detected by the system through the MBus.
  - These indicators are normally off.
- Audio alarm cutoff switch.
- 25-pin cable connection to an external alarm.
- Alarm card indicators:
  - ENABLED (green)—the alarm card is operational and functioning properly.
  - FAIL (yellow)—the alarm card in that slot is faulty.
- A pair of status LEDs that correspond to each of the CFC and SFC card slots in the switch fabric and clock scheduler card cage:
  - ENABLED (green)
    On—the card installed in that slot is operational and functioning properly.
    Off—either the slot is empty or the card installed in that slot is faulty.
  - FAIL (yellow)—the card in that slot is faulty.

Figure 4-5 Status LEDs on the Alarm Card

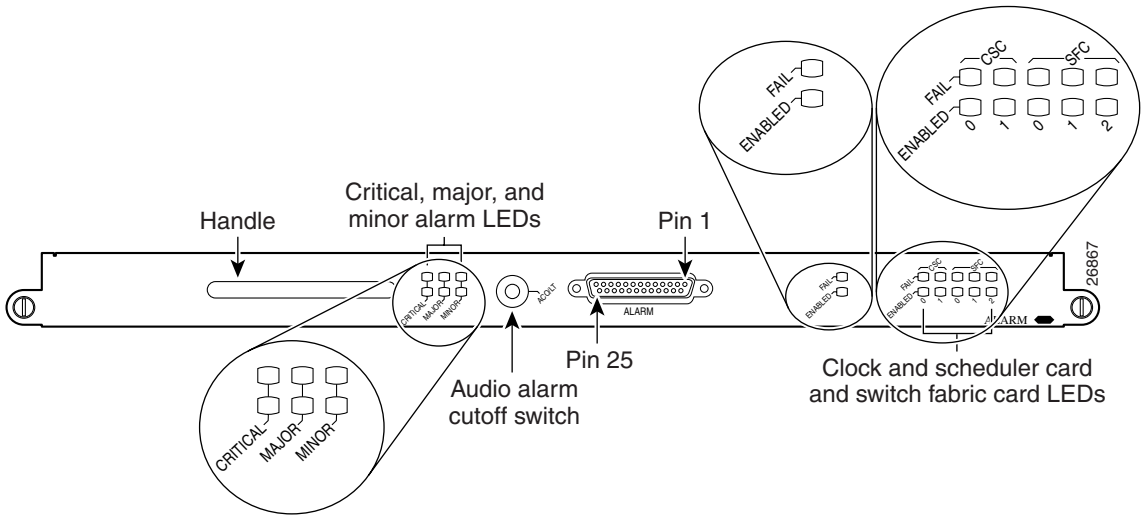

Monitoring Critical, Major, and Minor Alarm Status

The alarms can warn of an overtemperature condition:

- On a component in the card cage
- A fan failure in a blower module
- An overcurrent condition in a power supply
- An out-of-tolerance voltage on one of the cards

The alarm LEDs are controlled by MBus software, which sets the threshold levels for triggering the different stages of alarms.

The RP continuously polls the system for temperature, voltage, current, and fan speed values. If a threshold value is exceeded, the RP sets the appropriate alarm severity level on the alarm card which lights the corresponding LED, and energizes the appropriate alarm display relays to activate any external audible or visual alarms wired to the alarm display. The RP also logs a message about the threshold violation on the system console.

Note You can use the audio alarm cutoff switch to visually check that the alarm card indicators are operating properly. If no audible alarm is active, pressing the audio alarm cutoff switch temporarily lights all of the indicators on the alarm card front panel. If an indicator does not light it means that LED is faulty.

Troubleshooting the Switch Fabric

This section describes the procedures needed to troubleshoot problems with the switch fabric. The RP and the line cards connect through the crossbar switch fabric, which provides a high-speed physical path for most inter-card communication. Among the messages passed between the RP and the line cards over the switch fabric are, actual packets being routed and received, forwarding information, traffic statistics, and most management and control information. This information is useful in diagnosing hardware-related failures.

Note This section is recommended only for advanced Cisco IOS software operators and system administration personnel. Refer to the appropriate Cisco IOS software publications for detailed Cisco IOS information.

Use the following procedure to collect the needed data from the RPs and line cards in order to troubleshoot the switch fabric.

Step 1 Enter the **show controllers fia** command for the primary and secondary RPs and save the output.

Step 2 Enter the **attach <*slot #*>** command to access a line card.

Note Use the **attach** command when you connect to the line card. The **execute-on** command is dependent upon the inter-process communication (IPC) which operates over the switch fabric. If you are having problems with IPC, the commands that run remotely through the switch fabric can time out. The **attach <*slot #*>** command travels over the MBus and not the IPC.

Step 3 Enter the **show controllers fia** command for all installed line cards and save the output from each.

Step 4 Proceed to the next section, Analyzing the Data.

Analyzing the Data

Switch fabric problems can occur due to failures in any of the following components:

- RPs
- Line card hardware
- The backplane
- CSCs/SFCs

When troubleshooting switch fabric errors, look for patterns with regard to which components are reporting errors. For example, if you combine the **show controllers fia** output from all RPs and line cards, you can determine if there is an error pattern. The following subsections discuss the values within the output that can help you determine any error patterns.

crc16 Output

The crc16 data line from the **show controllers fia** command is an important indicator of hardware problems. If one line card or one CSC/SFC has been on line, inserted and removed, you can expect to see some crc16 error data. However, this number should not continue to increase. If the number is increasing, you may need to replace a faulty hardware component. It is very important to correlate the data from both the primary RP and the secondary RP and all installed line cards. The example output below shows the status of the primary RP. The crc16 data line is underlined and is showing errors from sfc1.

```
Router#show controllers fia
Fabric configuration: Full bandwidth, redundant fabric
Master Scheduler: Slot 17  Backup Scheduler: Slot 16
From Fabric FIA Errors
-----------------------
redund fifo parity 0    redund overflow 0      cell drops 0
crc32 lkup parity  0    cell parity     0      crc32      0
Switch cards present    0x001F    Slots  16 17 18 19 20
Switch cards monitored  0x001F    Slots  16 17 18 19 20
Slot:     16          17          18          19          20
Name:    csc0        csc1        sfc0        sfc1        sfc2
       --------    --------    --------    --------    --------
los    0           0           0           0           0
state  Off         Off         Off         Off         Off
crc16  0           0           0           1345        0
To Fabric FIA Errors
-----------------------
sca not pres 0         req error     0         uni FIFO overflow 0
grant parity 0         multi req     0         uni FIFO undrflow 0
cntrl parity 0         uni req       0         crc32 lkup parity 0
multi FIFO   0         empty dst req 0         handshake error   0
cell parity  0
```

In the example output below, you can see the status of the line card in slot 2. The crc16 data line is underlined and is showing errors from sfc1.

```
Router#attach 2
Entering Console for 4 port ATM Over SONET OC-3c/STM-1 in Slot: 2
Type "exit" to end this session
Press RETURN to get started!
LC-Slot2>
LC-Slot2>enable
LC-Slot2#show controllers fia
From Fabric FIA Errors
-----------------------
redund FIFO parity 0        redund overflow 0        cell drops 0
crc32 lkup parity  0        cell parity     0        crc32      0
Switch cards present    0x001F    Slots  16 17 18 19 20
Switch cards monitored  0x001F    Slots  16 17 18 19 20
Slot:     16          17          18          19          20
Name:    csc0        csc1        sfc0        sfc1        sfc2
       --------    --------    --------    --------    --------
Los    0           0           0           0           0
state  Off         Off         Off         Off         Off
crc16  0           0           0           1345        0
```

```
To Fabric FIA Errors
-----------------------
sca not pres 0          req error     0          uni fifo overflow 0
grant parity 0          multi req     0          uni fifo undrflow 0
cntrl parity 0          uni req       0          crc32 lkup parity 0
multi fifo   0          empty DST req 0          handshake error   0
cell parity  0
LC-Slot2#exit
Disconnecting from slot 2.
Connection Duration: 00:00:21
Router#
```

After you have gathered the **show controllers fia** command data from the RPs and line cards, you can create a table similar to Table 4-6.

Table 4-6 Error Data Collection Table

Card Slot	CSC 0	CSC 1	SFC 0	SFC 1	SFC 2	SFC 3	SFC 4
0				ERROR			
1							
2				ERROR			
3				ERROR			
4							
5				ERROR			
6							
7				ERROR			
8							

Table 4-6 indicates that more than one line card is reporting errors coming from SFC 1. Therefore, the first step to correcting this problem is to check or replace SFC 1. Whenever a replacement is recommended, first verify that the card is correctly seated (see the "Properly Seating Switch Fabric Cards" section on page 4-34).

Note Always reseat the corresponding card as the first line of troubleshooting to be sure it is correctly seated. If, after reseating the card, the crc errors are still increasing, then replace the part.

The common failure patterns and recommended actions for crc16 errors are as follows (one step at a time until the problem goes away):

1. Errors indicated on more than one line card from the same switch fabric card:
   a. Replace the switch fabric card in the slot corresponding to the errors.
   b. Replace all switch fabric cards.
   c. Replace the backplane.
2. Errors indicated on one line card from more than one switch fabric card:
   a. Replace the line card.
   b. If errors are incrementing, replace the current master CSC.
   c. If errors are not incrementing and the current master is CSC0, replace CSC1.

Grant Parity and Request Errors

Another troubleshooting indicator are the console logs or the output of the **show log** command, in the form of grant parity and request errors. Look for the type of message that indicates a grant parity error.

The common failure patterns and recommended actions for grant parity and request errors are as follows (one step at a time until the problem goes away):

1. Grant errors on more than one line card:
   a. Replace the CSC (see the note below to know which one should be swapped).
   b. Replace the backplane.
2. Grant errors on one line card:
   a. Replace the line card.
   b. Replace the CSC (see the note below to know which one should be swapped).
   c. Replace the backplane.

Note If multiple line cards are reporting grant parity or request errors and the router is still functioning, then a CSC switchover has occurred. The failed CSC is the one that is currently the backup CSC (not the one listed as Master Scheduler in the **show controllers fia** output). If Halted is next to the heading From Fabric FIA Errors or To Fabric FIA Errors, or if the router is no longer forwarding traffic, then a CSC switchover has not occurred and the failing CSC is the one listed as Master Scheduler. By default, the CSC in slot 17 is the primary and the CSC in slot 16 is the backup.

Properly Seating Switch Fabric Cards

The switch fabric cards in the router can be challenging to insert, and may require a small amount of force to seat correctly. If either of the CSCs are not seated properly, you may see an error message.

When dealing with switch fabric and line card booting problems, it is important to verify that all CSCs and SFCs are correctly seated and powered on.

Troubleshooting the Cooling Subsystem

The cooling subsystem of the router consists of an upper and lower blower module in the chassis and a fan in each of the power supplies. The blower modules and the power supply fans circulate air to maintain acceptable operating temperatures within the router (Figure 4-6).

This section contains information to troubleshooting the cooling subsystem and includes:

- Blower Module Operation, page 4-36
- Power Supply Operation, page 4-36
- Overtemperature Conditions, page 4-37
- Isolating Cooling Subsystem Problems, page 4-37

Figure 4-6 Cooling Air Flow

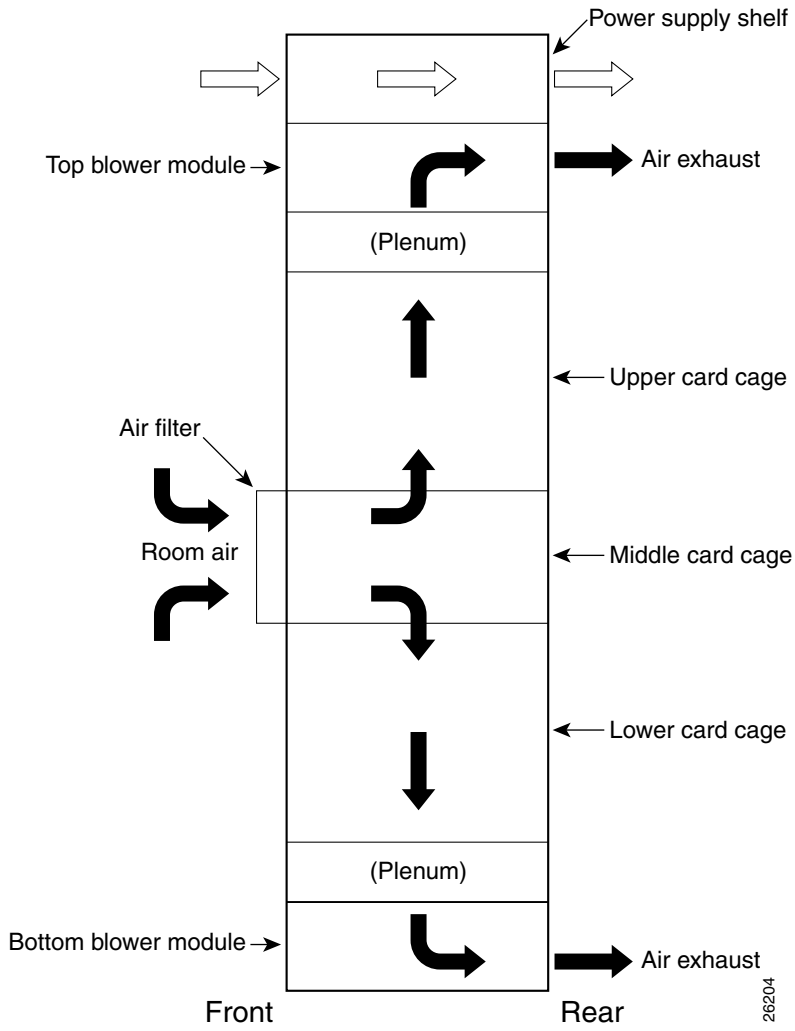

Blower Module Operation

The blower modules maintain acceptable operating temperatures for the internal components by drawing cooling air through a replaceable air filter into the card cages. The blowers occupy a bay near the top and at the bottom of the router.

Each blower module contains three fans, a controller card, and two front panel status LEDs. A snap-on plastic front cover fits over the front panel, but the LEDs are visible through the front covers.

  - Green—The blower module is functioning properly.
  - Red—There is a fault detected in the blower module.

- If the air temperature inside the chassis rises, blower speed increases to provide additional cooling air to the internal components.
- If the internal air temperature continues to rise beyond the specified threshold, the system environmental monitor shuts down all internal power to prevent equipment damage due to excessive heat.
- If the system detects that one or more of the fans in a blower module has failed, it displays a warning message on the system console and displays a blower failure message on the RP alphanumeric display. In addition, the remaining fans go to full speed to compensate for the loss of the failed fan.

Power Supply Operation

Each AC or DC power supply is equipped with a fan that draws cooler air in through the front of the power module and forces warmer out the back of the power shelf.

- If the power source is within the required range, the power supply fan remains on.
- If the fan fails:
  - Power supply detects an internal overtemperature condition
  - Fault and Temp indicators light
  - Power supply sends an overtemperature warning to the system and then shuts down the system.

For additional power supply troubleshooting information, see the "Troubleshooting the Power Subsystem" section on page 4-5.

Overtemperature Conditions

The following console error message indicates that the system has detected an overtemperature condition or out-of-tolerance power value inside the system:

```
Queued messages:
%ENVM-1-SHUTDOWN: Environmental Monitor initiated shutdown
```

The preceding message could also indicate a faulty component or temperature sensor. Enter the **show environment** command or the **show environment all** command at the user EXEC prompt to display information about the internal system environment. The information generated by these commands include:

- Voltage measurements on each card from the DC-to-DC converter
- The +5 VDC for the MBus module
- The operating voltage for the blower module.
- Temperature measurements received by two sensors on each card (one for inlet air temperature and one for the card's hot-spot temperature), as well as temperature measurements from sensors located in each power supply.

If an environmental shutdown results from an overtemperature or out-of-tolerance condition, the Fault indicator on the power supply lights before the system shuts down.

Although an overtemperature condition is unlikely at initial system startup, make sure that:

- Heated exhaust air from other equipment in the immediate environment is not entering the chassis card cage vents.
- You allow sufficient air flow by maintaining a minimum of 6 inches (15.24 cm) of clearance at both the inlet and exhaust openings on the chassis and the power modules to allow cool air to enter freely and hot air to be expelled from the chassis.

Isolating Cooling Subsystem Problems

Use the following procedure to isolate a problem with the chassis cooling system if you have an overtemperature condition.

Step 1 Make sure the blower modules are operating properly when you power on the system.

- To determine if a blower module is operating, check the two LED indicators on the blower module front panel:
  - OK (green)—The blower module is functioning properly and receiving –48 VDC power, indicating that the cables from the chassis backplane to the blower module are good.
  - Fail (red)—A fault is detected in the blower module. Replace the blower module.
  - If neither indicator is on and the blower is not operating, there may be a problem with either the blower module or the –48 VDC power supplied to the blower module. Go to Step 2.

Step 2 Eject and reseat the blower module making sure the captive screws are securely tightened.

If the blower module still does not function, go to Step 3.

Step 3 Check for –48 VDC power by looking at the LED indicators on each power supply:

- If the Pwr OK indicator is on and the Fault indicator is off on each power supply, it indicates that the blower is receiving –48 VDC.
  - If the blower module is still not functioning, there could be a problem with the blower module controller card or an undetected problem in the blower module cable. Replace the blower module.
  - If the new blower module does not function, contact a Cisco customer service representative for assistance.
- If the Fault indicator is on, the power supply is faulty. Replace the power supply.
- If the Temp and Fault indicators are on, an overtemperature condition exists.
  - Verify that the power supply fan is operating properly.
  - If the fan is not operating, replace the power supply.

    Contact your Cisco representative if replacing the power supply does not fix the problem.

CHAPTER 5

Maintaining the Router

The Cisco XR 12416 router is equipped as ordered and is ready for installation and startup when it is shipped. As your networking requirements change, you may need to upgrade the system by adding or changing components. This chapter describes how to maintain router components.

Procedures for maintaining the router are described in the following sections:

- Powering Off the Router, page 5-2
- Removing and Installing Front Doors, page 5-3
- Cleaning or Replacing the Chassis Air Filter, page 5-7
- Removing and Replacing Blower Modules, page 5-10
- Removing and Replacing AC and DC Power Subsystem Components, page 5-14
- Removing and Replacing the Standard AC-Input Power Shelf, page 5-19
- Removing and Replacing the Optional 2-Level AC-Input Power Shelf, page 5-24
- Upgrading to the Optional AC Power Shelf, page 5-30
- Removing and Replacing a DC PEM, page 5-31
- Removing and Replacing the DC Power Shelf, page 5-37
- Removing and Replacing Cards from the Chassis, page 5-46
- Removing and Installing a Chassis, page 5-53
- Removing and Replacing a Power Bus Board Fuse, page 5-61

Prerequisites and Preparation

Before you perform any of the procedures in this chapter, be sure that you:

- Review the "Safety Guidelines" section on page 2-2.
- Read the safety and ESD-prevention guidelines described in the "Preventing Electrostatic Discharge Damage" section on page 2-4.
- Ensure that you have all of the necessary tools and equipment before beginning the procedure.
- Have access to the following documents during the installation:
  - *Regulatory Compliance and Safety Information for Cisco 12000 Series Routers* publication that shipped with the router.

Powering Off the Router

Most field-replaceable units (FRUs) can be removed and replaced with the power on and the system operating. This is known as online insertion and removal (OIR). Power supplies, line cards, the RP, CSCs, SFCs, and alarm cards all support OIR. Unless otherwise noted, the maintenance tasks described in this chapter can be performed while the router remains powered on.

In some cases it may be necessary to power off the router, for example, to upgrade power supplies or to replace a power shelf. Use the following procedure to power off the router.

Step 1 Set the power switch on each power supply to the off (0) position.

Step 2 Power off all circuit breakers for the source power lines connected to the power supplies.

Step 3 Verify that the PWR OK indicator on each power supply is off.

Step 4 Verify that the OK indicator on each blower module is off.

Removing and Installing Front Doors

The router ships with the door hinges mounted on the left side of the chassis so that they open from right-to-left. This section describes how to change the front doors to open from left-to-right by installing the hinges on the opposite side.

Use the following procedure to change the location of the hinges.

Note The illustrations in this procedure show the top front door, but the procedure is the same for either the top or bottom door.

Step 1 Open the top front door by pressing the right latch button (Figure 5-1).

Figure 5-1 Opening the Front Door

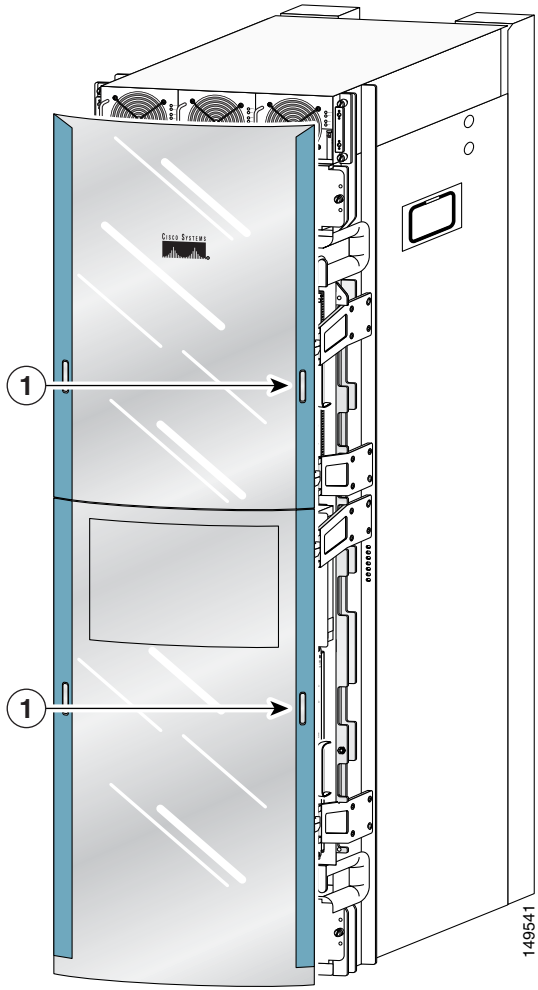

1	Front door latches

Step 2 Remove the front door by lifting the (top and bottom) hinge pins to free the door from the chassis (Figure 5-2).

Caution Make sure you are holding the front door securely so it does not drop when you release it from the chassis.

Figure 5-2 Removing or Installing Hinge Pins

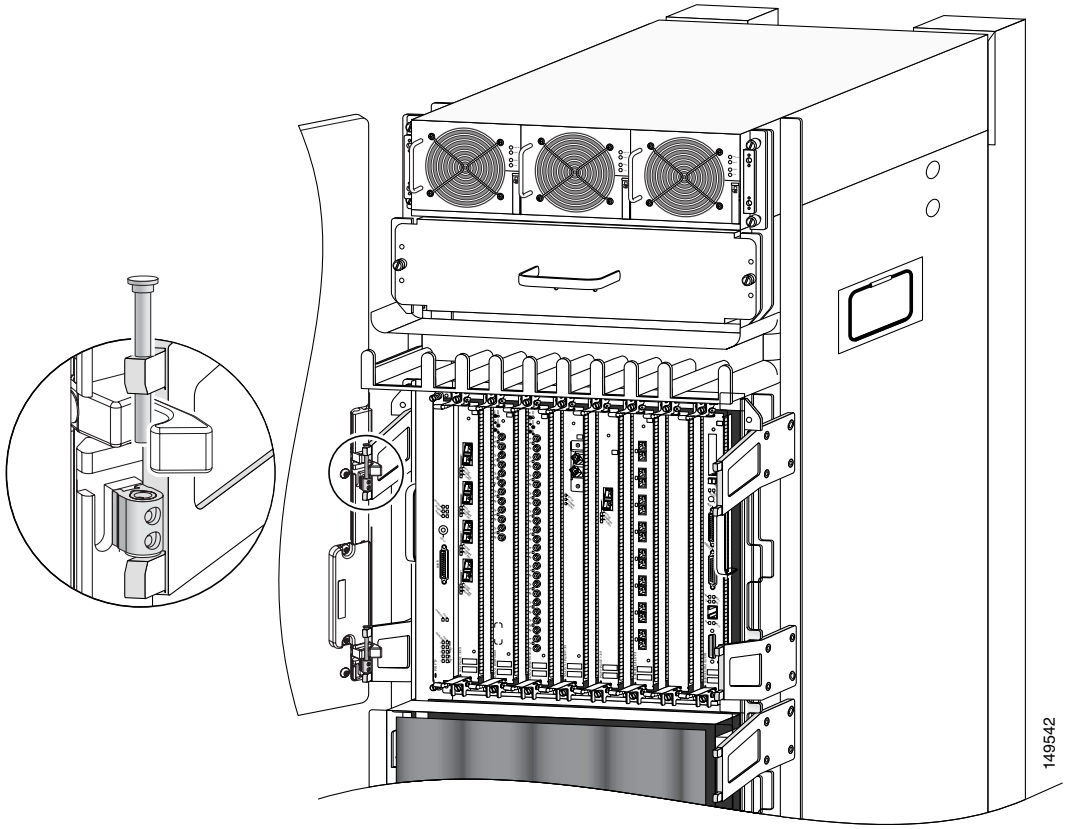

Reinstall the hinge pins into the chassis hinge brackets

Step 3 Remove the bumpers and pivot blocks from the door as shown in Figure 5-3.

Figure 5-3 Removing the Bumpers and Pivot Blocks

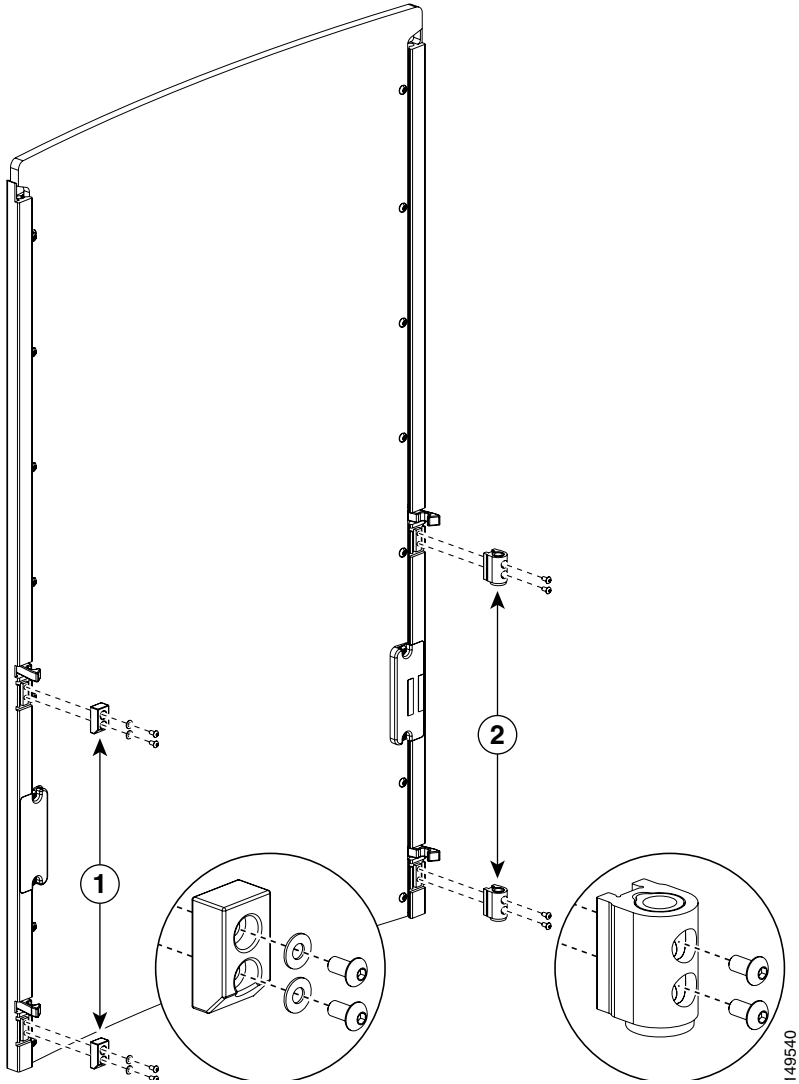

1	Bumpers	**2**	Pivot blocks

Step 4 Reinstall the hardware to the opposite sides of the front door:

a. Mount pivot blocks to the left side and tighten the screws until snug.

b. Mount the bumpers to the right side and tighten the screws until snug.

Step 5 Attach the front door to the chassis:

a. Remove the hinge pins from the hinges on the right side of the chassis.

b. Align the pivot blocks on the front door with the hinges on the right side of the chassis and install the hinge pins to hold the door in place (see Figure 5-2).

c. Close the front door by pressing the latch button, allowing the door latch to engage with the hinge pins on the chassis.

Step 6 Repeat Step 1 through Step 5 for the bottom door.

Cleaning or Replacing the Chassis Air Filter

The router is equipped a user-serviceable air filter that removes dust drawn into the router. One time per month (or more often in dusty environments), examine the air filter for damage and cleanliness.

Caution Damage to the air filter can restrict the airflow, cause overheating in the router, and degrade EMI performance. Be careful when cleaning and replacing the filter.

Use the following procedure to clean or replace the air filter.

Step 1 Loosen the 4 captive screws on the air filter door and pivot the door open (Figure 5-4).

Figure 5-4 Opening the Chassis Air Filter Door

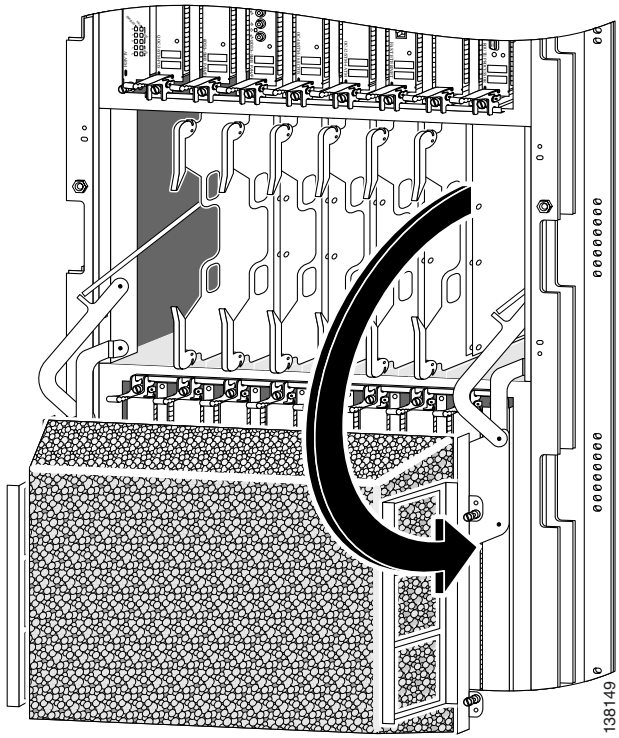

Step 2 Lift up the air filter and carefully slide it out of the door (Figure 5-5).

Caution Be careful not to damage the honeycomb screens on the back of the air filter door and in the fabric card cage. Damage to the honeycomb screens can restrict airflow, cause overheating, and affect EMI performance.

Figure 5-5 Removing the Chassis Air Filter

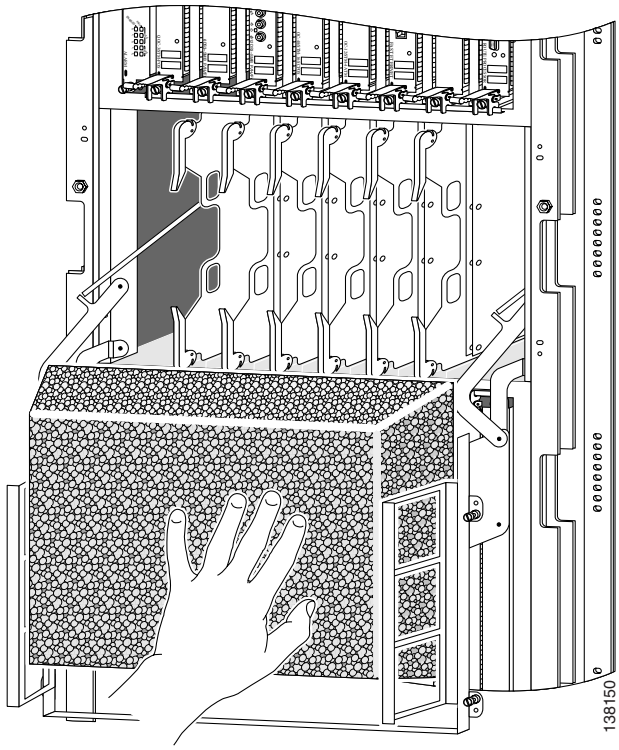

Step 3 Visually check the condition of the air filter to determine whether to clean it or install a new replacement.

- Dirty—You can vacuum or replace the filter.

Caution Do not vacuum the air filter while it is installed in the chassis. You must remove the air filter completely before you clean it to prevent contaminants from being drawn into the bays or cage.

- Worn or torn—If the filter appears worn or torn, dispose of it in a responsible manner and install a replacement air filter (12000/16-FILTER=).

Step 4 Slide the new or cleaned air filter into the air filter door.

Step 5 Close the air filter door and tighten the 4 captive screws.

Caution Align and seat the door carefully to avoid damaging the EMI-preventive gasket contacts on the door. The air filter door must be closed and secured at all times to maintain correct EMI performance.

Removing and Replacing Blower Modules

The blower modules support online insertion and removal (OIR), so you can remove and install a blower module while the system remains powered on without presenting an electrical hazard or damage to the system. You can replace a blower module while the system maintains all routing information and ensures session preservation.

Caution Although the blower module supports OIR and can be replaced without interruption to system operation, the system should not operate without a blower module for more than 3 minutes to prevent overheating.

Upper and Lower Blower Module Orientation

Illustrations in this procedure show the removal and replacement of the upper blower module. The procedure to replace the lower blower module is the same *except for the orientation of the blower module*.

- Heads-up orientation—Install the blower module in the upper bay in the "heads-up" orientation with the three fan air intake openings face down.
- Heads-down orientation—Install the blower module in the lower blower module bay in the "heads-down" orientation with the three fan air intake openings face up.

Use the following procedure to remove and replace the blower modules.

Step 1 Remove the blower module from the chassis (Figure 5-6):

a. Loosen the captive screw on each side of the blower module.

b. Pull out the blower module halfway from the module bay.

c. Slide out the blower module completely from the module bay while supporting it with your other hand.

Warning **The blower module weighs approximately 20 pounds (9 kg). Use two hands when handling the blower module.**

Figure 5-6 Removing the Upper Blower Module

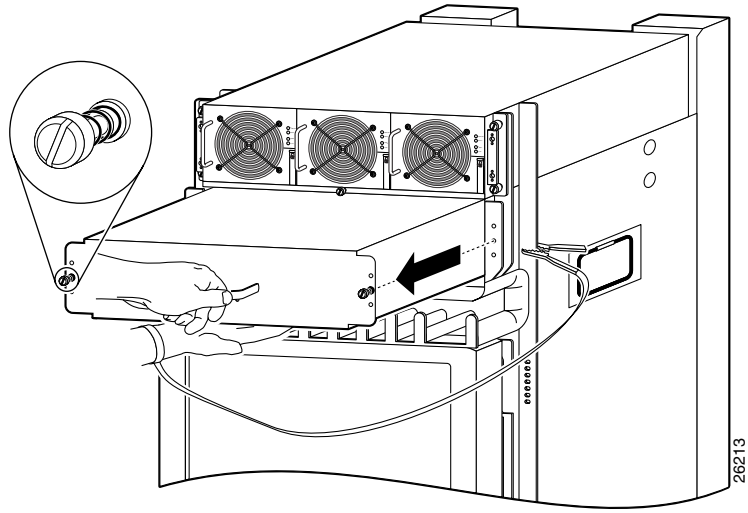

Step 2 Install the new blower module into the chassis (Figure 5-7):

a. Lift the blower module (with two hands) and slide it halfway into the module bay.

b. Slowly push the blower module into the chassis until it mates with the backplane connector at the back of the module bay.

Caution To prevent damage to the connectors, do not use excessive force when inserting the blower module into the chassis.

c. Tighten the captive screws on the blower module to secure it to the chassis.

- The (green) OK status indicator on the front of the blower module should light. If the OK indicator does not light, see the "Isolating Cooling Subsystem Problems" section on page 4-37.

Figure 5-7 Installing the Upper Blower Module

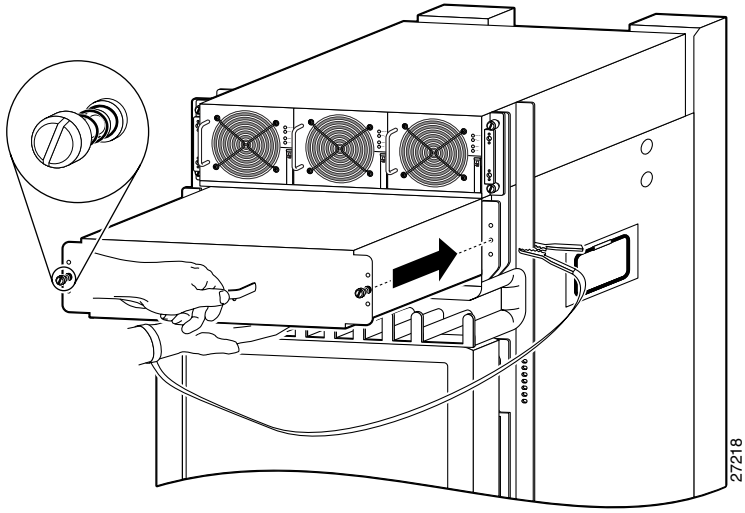

Removing and Replacing AC and DC Power Subsystem Components

The Cisco XR 12416 router supports online insertion and removal (OIR). If you are replacing a redundant power supply, you can remove and install the power supply while the system remains powered on without causing an electrical hazard or damage to the system. This feature enables you replace a power supply while the system maintains all routing information and ensures session preservation.

However, to maintain operational redundancy, proper cooling, and meet EMI compliance standards, you must have all three (standard) or four (optional) working power supplies installed. When you remove a failed power supply with the router in operation, perform the replacement as quickly as possible. Make sure you have the tools and the replacement power supply ready before beginning the removal and installation procedure.

Removing and Replacing an AC Power Supply

This section provides the procedure to remove an AC power supply from the standard single-level AC power shelf. The procedure to remove an AC-input power supply from the optional double-level AC-input power shelf are identical to these; only the slot locations for AC-input power supplies are different.

Figure 5-8 shows AC power shelves housing the power supplies.

Figure 5-8 Standard and Optional AC Power Shelves

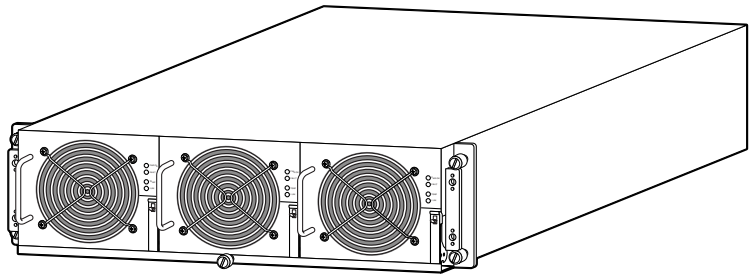

(a) Standard AC-input power shelf

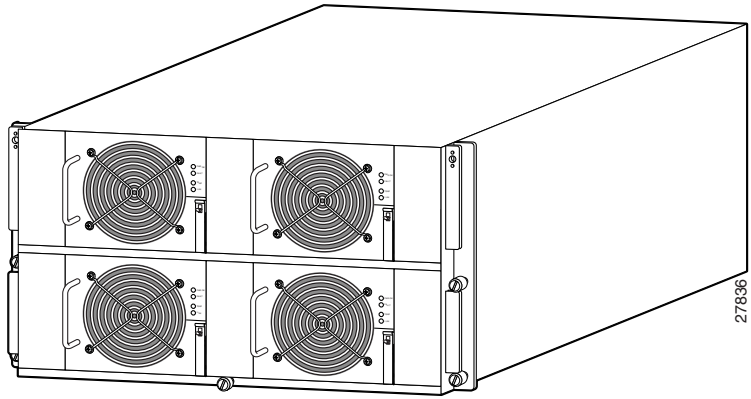

(b) Optional AC-input power shelf

Figure 5-9 identifies the components of the AC power supply.

Figure 5-9 AC Power Supply Components

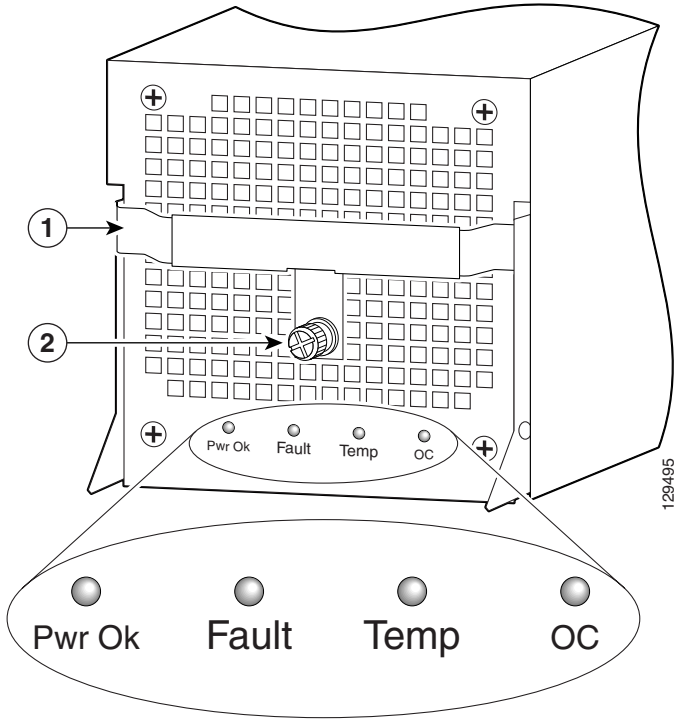

1	Ejector handle	**2**	Captive screw

To remove and replace an AC power supply, use the following procedure.

Step 1 Unplug the power supply cord from its AC outlet.

Step 2 Power off the circuit breaker assigned to that AC outlet.

Warning **To ensure that power remains off while you are performing this procedure, tape the circuit breaker switch in the off (0) position.**

Step 3 Remove the PEM from the power shelf (Figure 5-10):

a. Loosen the captive screw to release the ejector handle.

b. Pivot the ejector handle down to eject the power supply from its backplane connector.

c. Slide the power supply out of its bay while supporting it with your other hand.

Figure 5-10 Removing an AC Power Supply

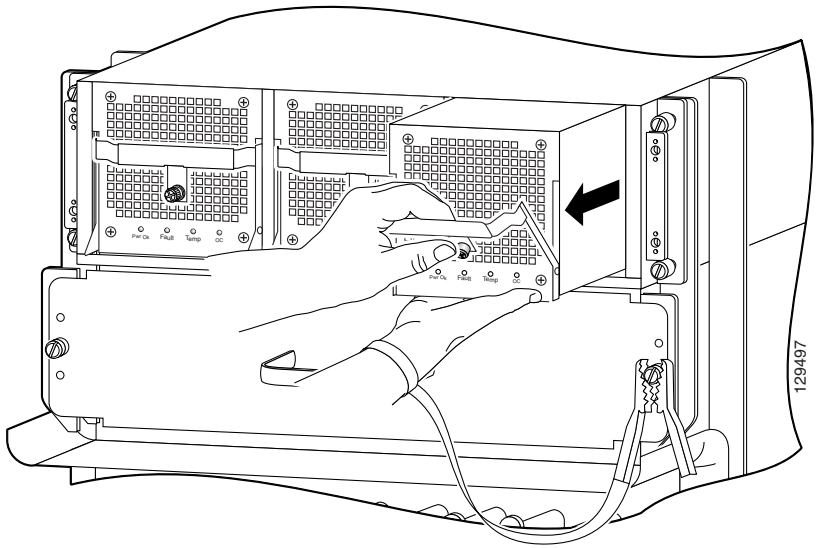

Step 4 Install the new power supply (Figure 5-11):

a. Slide the power supply into the bay until it mates with its backplane connector.

Caution To prevent damage to the power shelf backplane connector, do not use excessive force when inserting the power supply into its power shelf bay.

b. Lift up the ejector handle to hook it over the bottom edge of the power shelf.

c. Tighten the captive screw to secure the power supply in the shelf.

Figure 5-11 Installing an AC Power Supply

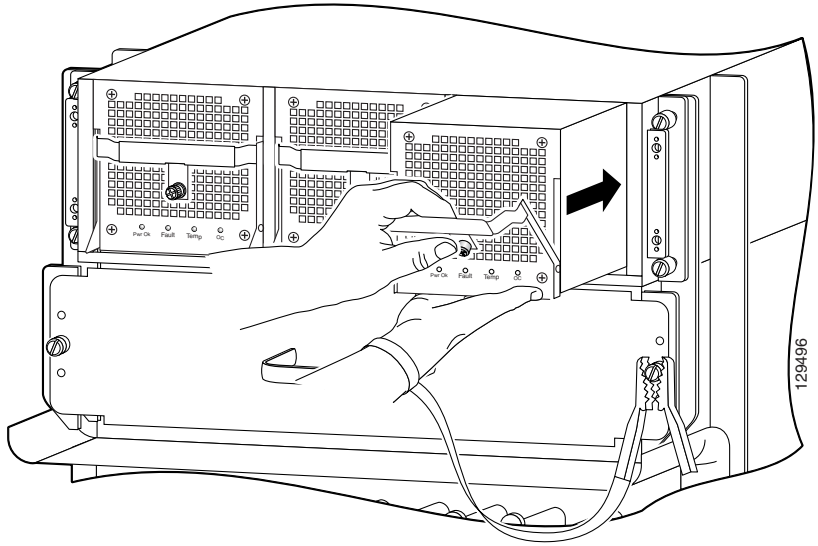

Step 5 Plug the power supply cable into its AC outlet.

Step 6 Power on the circuit breaker to that AC outlet.

After the power-on sequence completes, the (green) PWR OK indicator on the front of the power supply should light. If the indicator does not light, see the "Troubleshooting an AC Power Supply" section on page 4-5.

Removing and Replacing the Standard AC-Input Power Shelf

Use the following procedure to remove and replace the standard AC-input power shelf.

Caution To remove and replace the power shelf, the system must be powered off. Be sure to notify the network administrator and other appropriate personnel that all routing traffic stops while the upgrade takes place.

Step 1 Remove all of the power supplies as described in "Removing and Replacing an AC Power Supply" section on page 5-14.

Step 2 Disconnect each of the AC power cords from the back panel of the power shelf by lifting the retention clip and unplugging the cord (Figure 5-12).

Figure 5-12 Disconnecting AC Power Cords

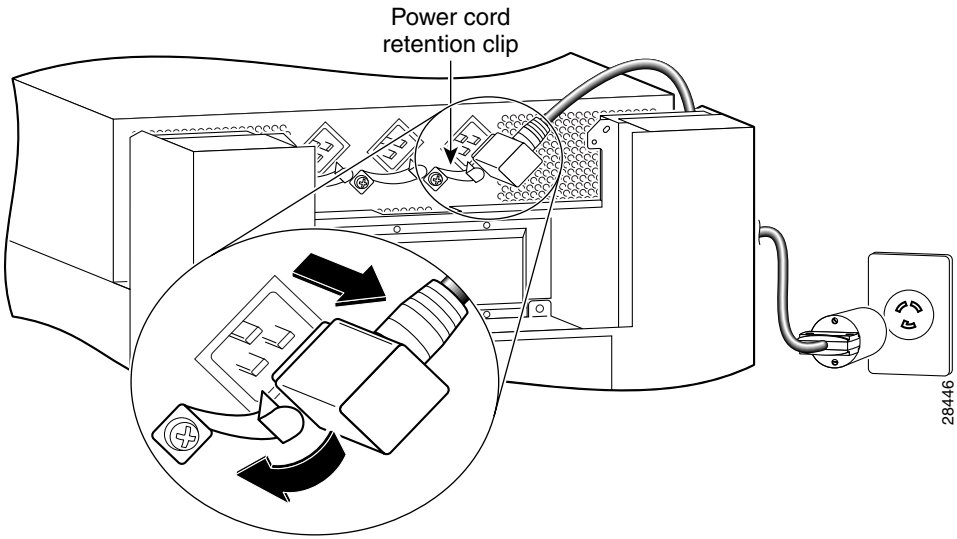

Step 3 Unseat the power shelf from the chassis (Figure 5-13):

a. Loosen the two captive screws on each side of the power shelf.

b. Loosen the ejector jackscrew to unseat the power shelf from the power interface panel connectors.

Figure 5-13 Unseating the Power Shelf

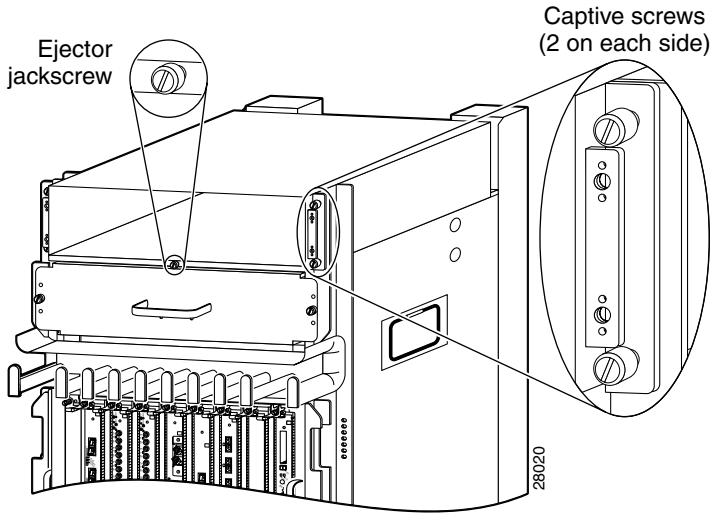

Step 4 Remove the power shelf by grasping the flanges on each side and slowly pulling the shelf along the chassis track to remove it (Figure 5-14):

Warning **The AC-input power shelf weighs approximately 21 pounds (9.5 kg). Use two hands to remove the power shelf.**

Figure 5-14 Removing the AC-Input Power Shelf

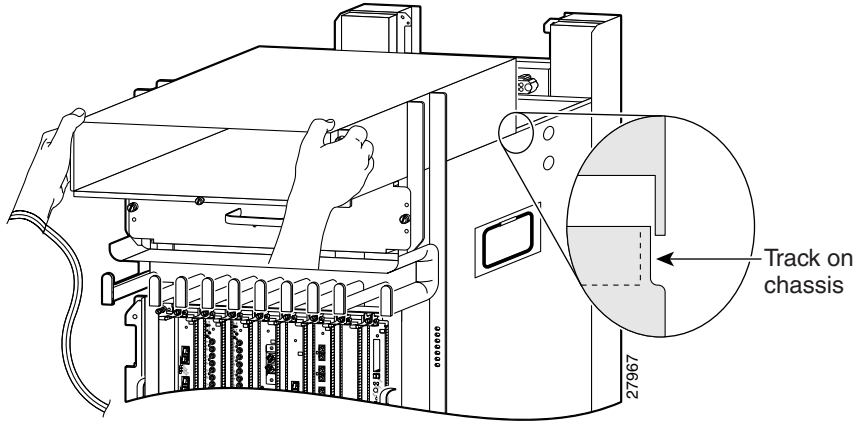

Step 5 Insert the new power shelf halfway into the chassis.

Step 6 Connect the power shelf to the chassis power interface panel connectors (Figure 5-15):

a. Be sure the holes on each side of the power shelf are aligned with the guide pins on each side of the chassis.

b. Carefully slide the power shelf into place until its two connectors just mate with the power interface panel connectors.

Caution To prevent damage to the interface connectors, do not use excessive force when inserting the power shelf into the chassis.

Figure 5-15 Connecting the AC-Input Power Shelf

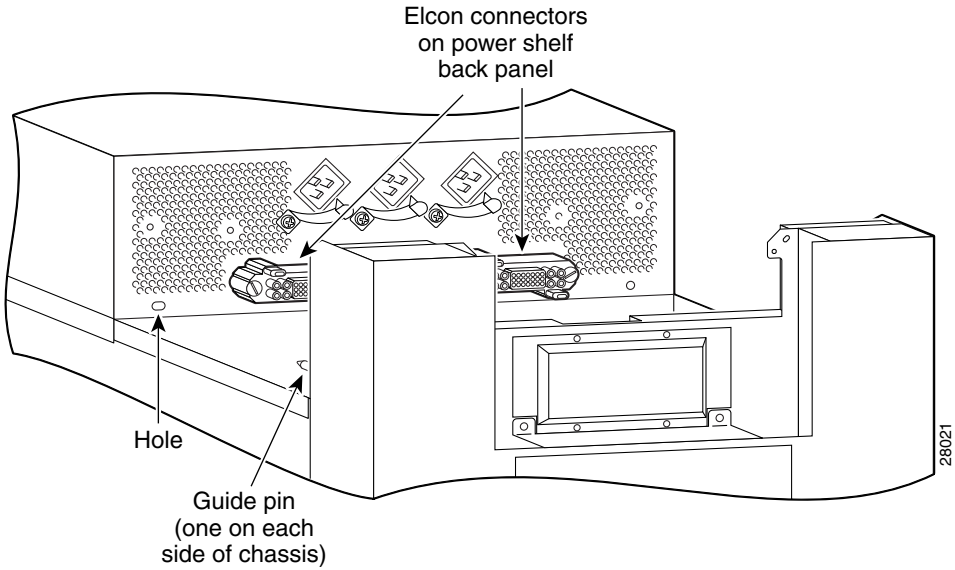

Step 7 Seat the power shelf to the chassis (Figure 5-16):

a. Tighten the ejector jackscrew.

b. Tighten the captive screws on each flange.

Figure 5-16 Seating the Power Shelf

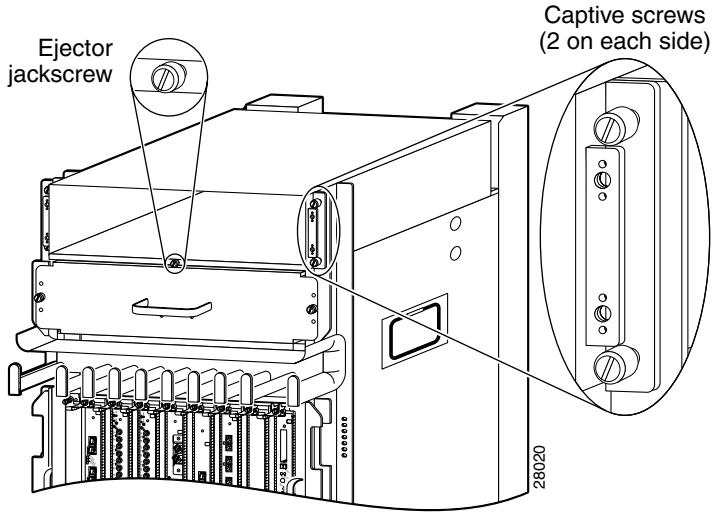

Step 8 Reconnect each of the AC power cords to the back panel of the power shelf and secure them in place with their retention clips (Figure 5-17).

Figure 5-17 Reconnecting AC Power Cords

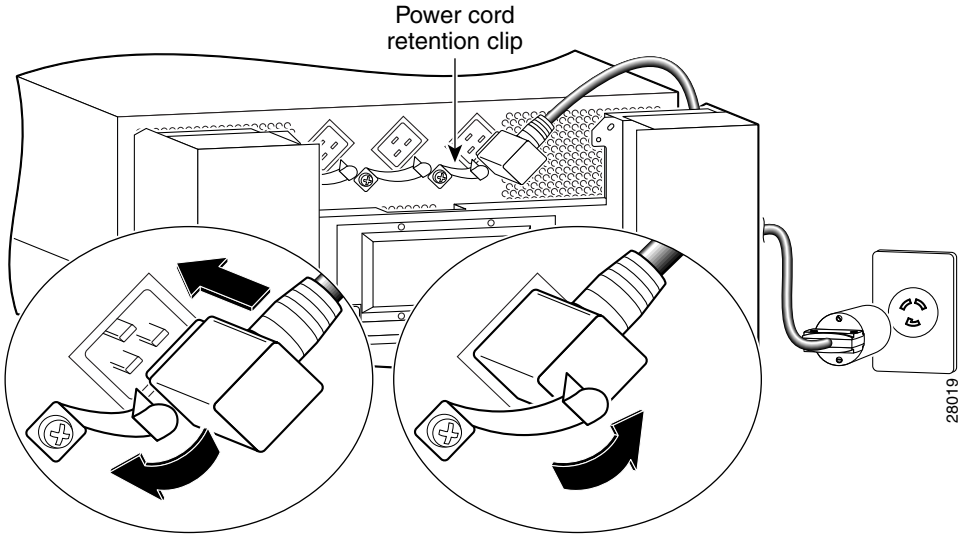

Step 9 Reinstall the power supplies as described in "Removing and Replacing an AC Power Supply" section on page 5-14.

Removing and Replacing the Optional 2-Level AC-Input Power Shelf

Use the following procedure to remove and replace the optional 2-level AC-input power shelf.

Caution To remove and replace the power shelf, the system must be powered off. Notify the network administrator and other appropriate personnel that all routing traffic stops while the upgrade takes place.

Step 1 Remove all of the power supplies as described in Removing and Replacing an AC Power Supply, page 5-14.

Step 2 Disconnect each of the AC power cords from the back panel of the power shelf by lifting the retention clip and unplugging the cord (Figure 5-18).

Figure 5-18 Disconnecting the AC Power Cords

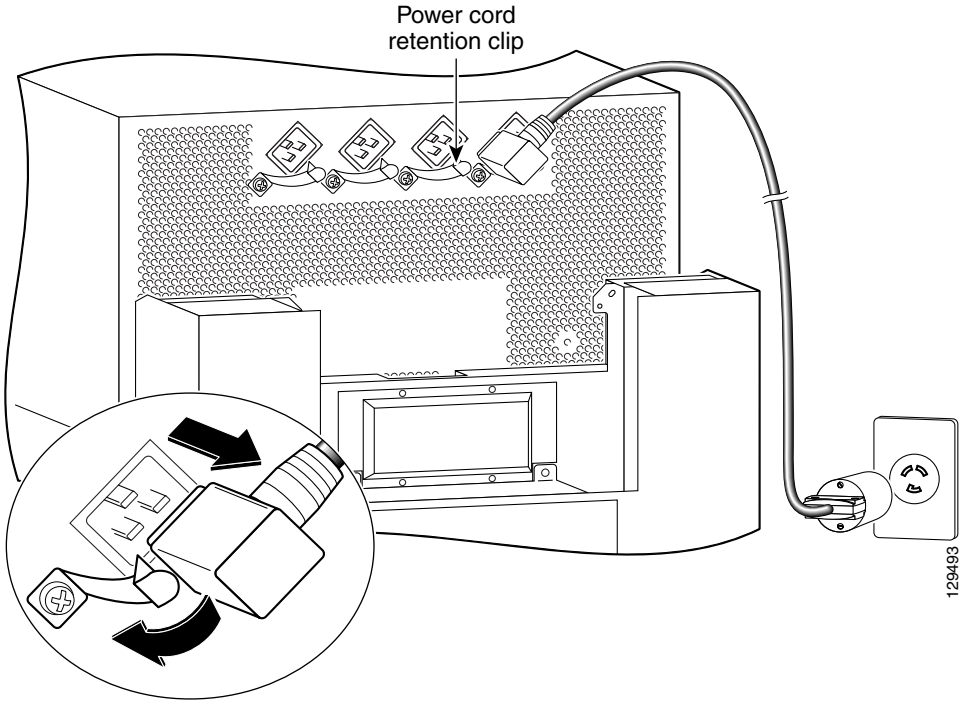

Step 3 Loosen the two captive screws on each side of the power shelf.

Step 4 Loosen the ejector jackscrew to unseat the power shelf from the connectors on the chassis power interface panel.

Step 5 Remove the power shelf by grasping the flanges on each side and slowly pulling the shelf along the chassis track to remove it (Figure 5-19).

Warning **The AC-input power shelf weighs approximately 42 pounds (19.05 kg). Use two hands to remove the power shelf.**

Figure 5-19 Removing the AC-Input Power Shelf

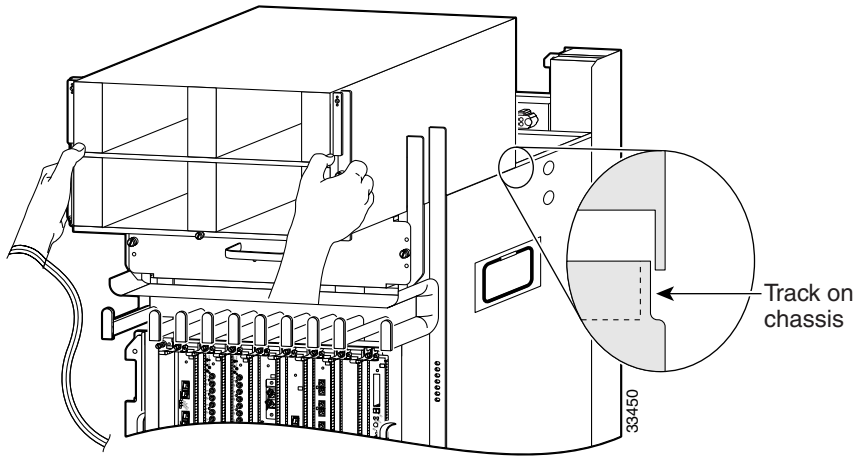

Step 6 Insert the new power shelf halfway into the chassis.

Step 7 Connect the power shelf to the chassis power interface panel connectors (Figure 5-20):

a. Be sure the holes on each side of the power shelf are aligned with the guide pins on each side of the chassis.

b. Carefully slide the power shelf into place until its two connectors just mate with the power interface panel connectors.

Caution To prevent damage to the interface connectors, do not use excessive force when inserting the power shelf into the chassis.

Figure 5-20 Connecting the AC-Input Power Shelf

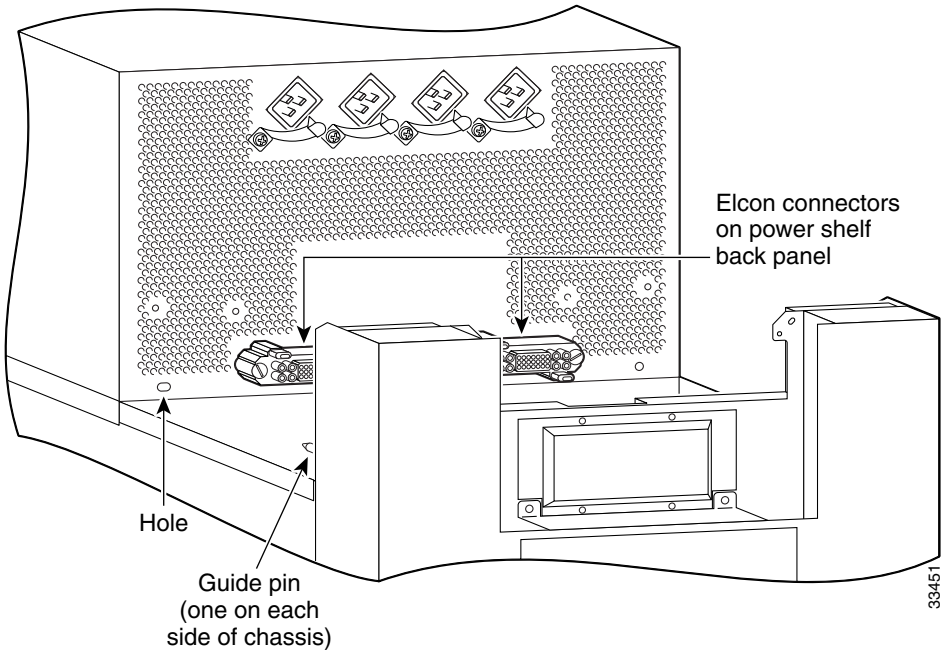

Step 8 Install the power shelf by grasping the flanges on each side and slowly sliding the shelf into the chassis along the track (Figure 5-21):

a. Tighten the ejector jackscrew.

b. Tighten the two captive screws on each flange.

Figure 5-21 Installing the AC-Input Power Shelf

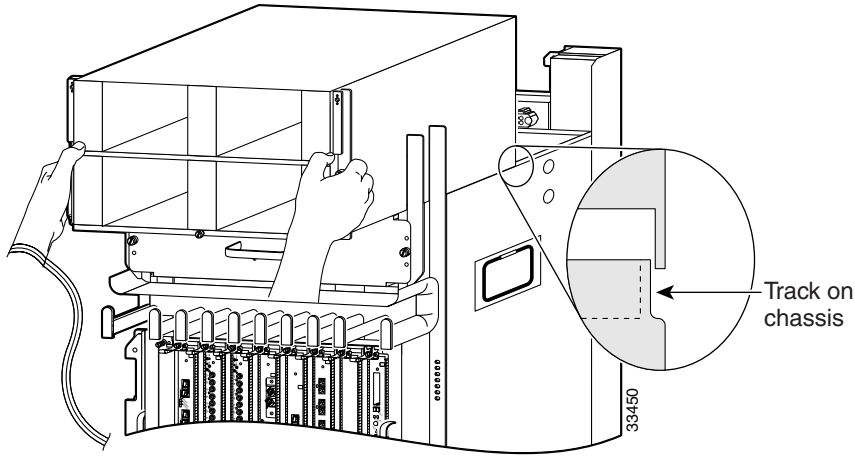

Step 9 Reconnect each of the AC power cords to the back panel of the power shelf and secure them in place with their retention clips (Figure 5-22).

Figure 5-22 Reconnecting AC Power Cords

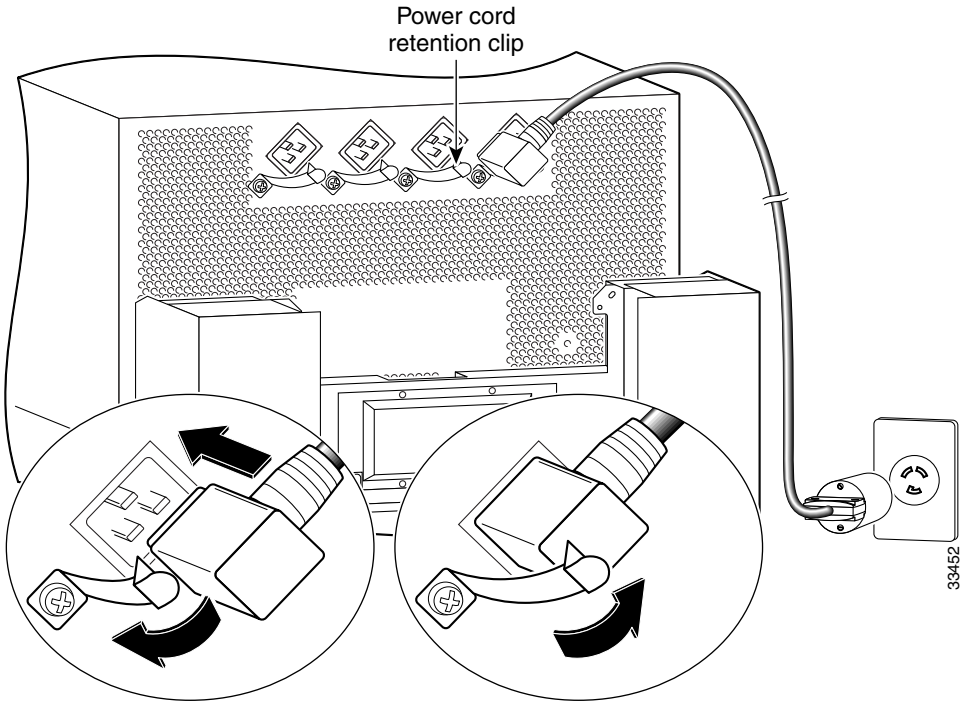

Step 10 Reinstall the power supplies as described in "Removing and Replacing an AC Power Supply" section on page 5-14 beginning with Step 6.

Upgrading to the Optional AC Power Shelf

Use the following procedure to upgrade your router from the standard, 1-level AC power shelf to an optional, 2-level AC power shelf.

Note A router with an optional, 2-level power shelf is 77.5 inches (196.85 cm) in height and does not fit into a standard 7-foot rack.

Step 1 Remove the standard one-level power shelf following the procedures in "Removing and Replacing the Standard AC-Input Power Shelf" section on page 5-19 through Step 4.

Step 2 Install the optional, 2-level power shelf following the procedures in "Removing and Replacing the Optional 2-Level AC-Input Power Shelf" section on page 5-24 beginning with Step 6.

Step 3 Replace the old cover with the new cover you received in the upgrade kit.

a. Hold the front cover by its outside edges and align the four ball studs on the back of the cover with the sockets on the front of the chassis.

b. Push in the front cover until all four ball studs snap into their sockets and the front cover is flush against the front of the chassis.

Removing and Replacing a DC PEM

This section contains the procedure to remove and replace an DC PEM from the chassis. *Before* you begin this procedure, read the "Removing and Replacing an AC Power Supply" section on page 5-14.

Figure 5-23 identifies the components of a DC power supply.

Figure 5-23 DC Power Supply Components

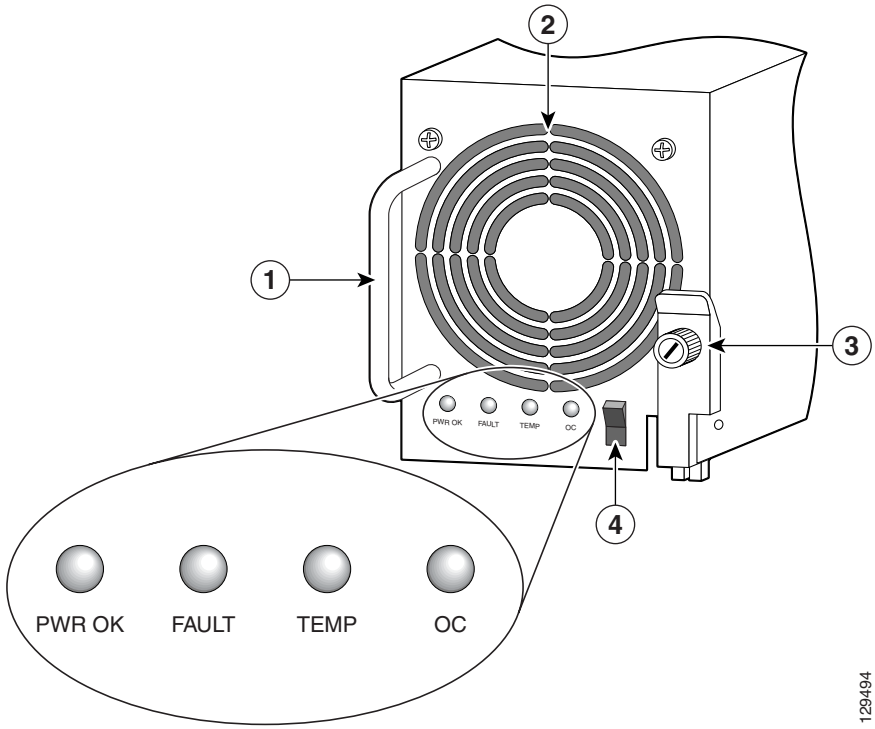

1	Handle	**3**	Ejector lever
2	Fan	**4**	Power switch

Use the following procedure to remove and replace a DC PEM.

Step 1 Power off the PEM by switching its circuit breaker off.

Step 2 Power off the DC circuit breaker assigned to that PEM.

Warning **To ensure that power remains off while you are performing this procedure, tape the circuit breaker switch in the off (0) position.**

Step 3 Loosen the captive screw on the ejector handle and pivot the lever down to eject the PEM from its bay (Figure 5-24).

Step 4 Remove the PEM from the power shelf (Figure 5-24):

a. Pull the PEM halfway out of its bay.

b. Slide the PEM out of its bay while supporting it with your other hand.

Warning **The DC PEM weighs approximately 6 pounds (2.7 kg). Use two hands to remove the power supply.**

Figure 5-24 Removing a DC PEM

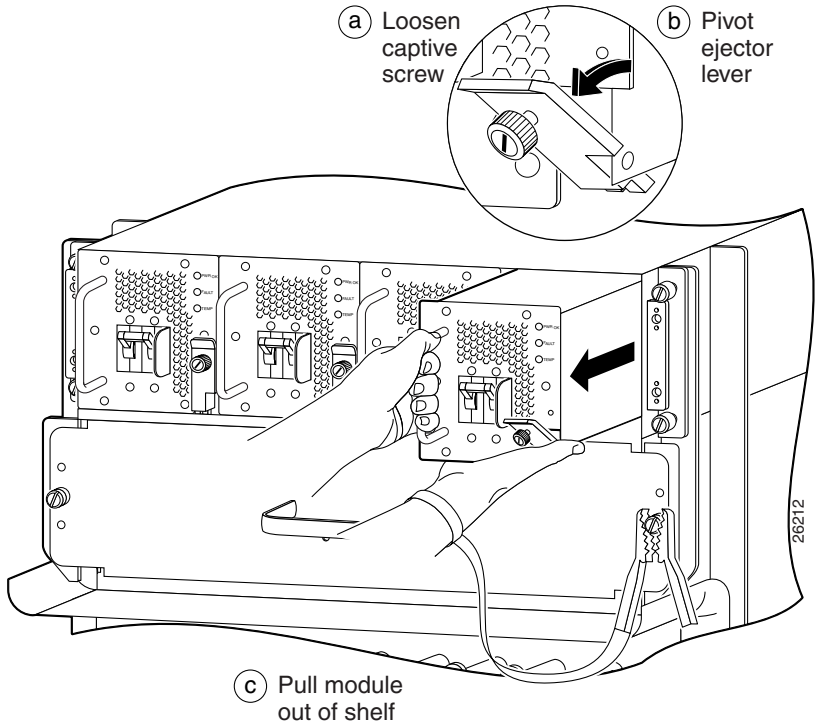

Step 5 Install the new DC PEM into the power shelf (Figure 5-25):

a. Slide the PEM halfway into the chassis.

b. Slowly push the power supply into the chassis until it mates with the backplane connector at the back of the bay.

c. Position the bottom of the ejector lever in the slot on the bottom of the power shelf and lift the ejector lever into place to seat the PEM to the backplane connector.

Caution To prevent damage to the power shelf backplane connector, do not use excessive force when inserting the PEM into its power shelf bay.

d. Tighten the captive screw to secure the PEM in the power shelf.

Note Because the PEM is powered redundantly by other PEMs in its power load zone, the fault indicator may go on. This can happen even if the circuit breaker for that PEM is switched off, or if there is no DC source power to the PEM. When power is supplied to the PEM and the circuit breaker is switched on, the fault indicator should go off and the PWR OK indicator should light.

Figure 5-25 Installing a DC PEM

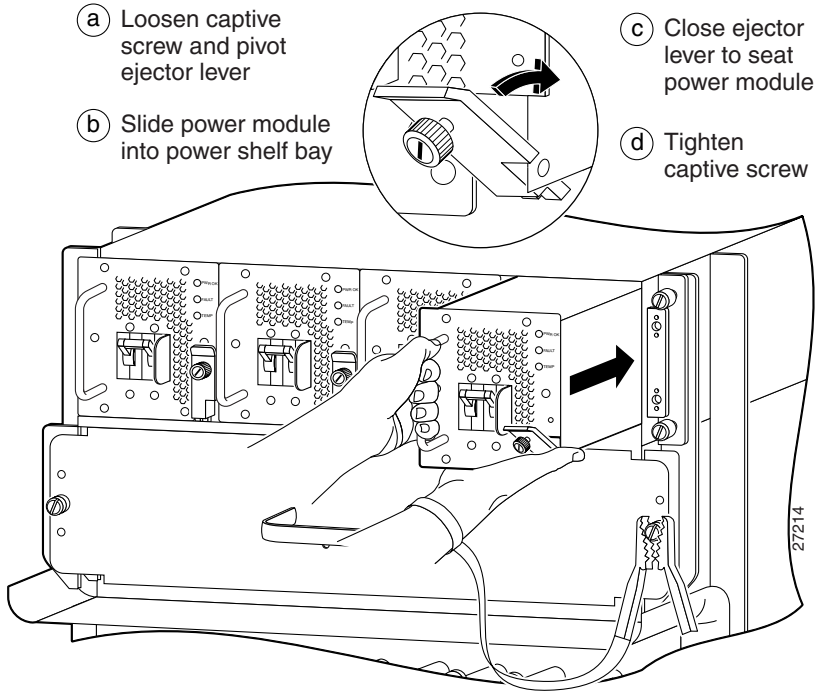

Step 6 Power on the DC circuit breaker assigned to that PEM.

Step 7 Power on the PEM by switching on its circuit breaker.

After the power-on sequence completes, the (green) PWR OK indicator on the front of the PEM should light. If the indicator does not light, see the "Troubleshooting a DC Power Supply" section on page 4-10.

Removing and Replacing the DC Power Shelf

Use the following procedure to remove and replace the DC-input power shelf.

Caution To remove and replace the power shelf, the system must be powered off. Notify the network administrator and other appropriate personnel that all routing traffic stops while the upgrade takes place.

Step 1 Remove all of the DC PEMs as described in the "Removing and Replacing a DC PEM" procedure on page 5-31 through Step 4.

Step 2 Remove the power cable cover by loosening its retaining screw (Figure 5-26).

Figure 5-26 Removing the Source DC Power Cable Cover

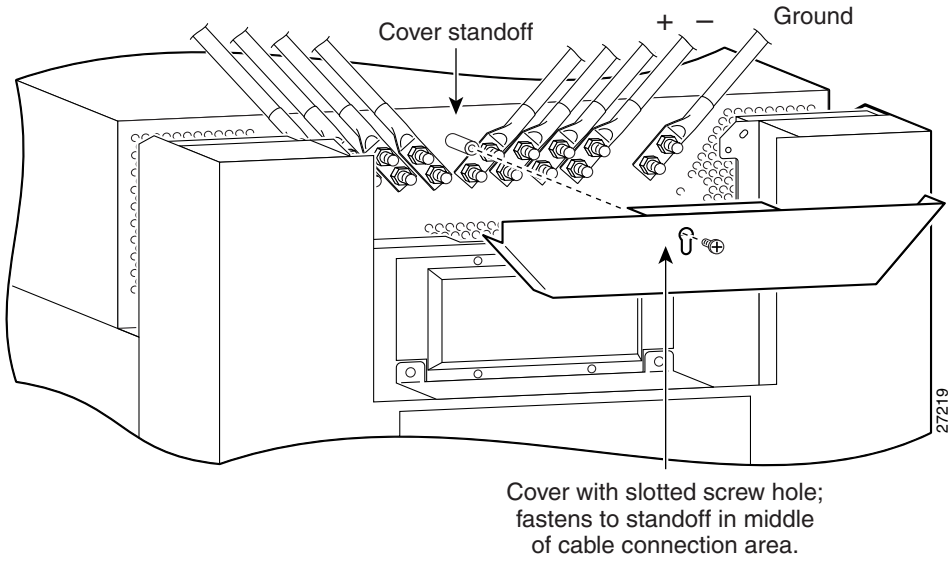

Step 3 Measure the voltage across each pair of positive (+) and negative (–) terminals of the power shelf to be sure they are not receiving power.

- All readings should be 0 VDC.

Warning **Do not proceed if all readings are not 0 (zero) volts. Make sure that the router is powered off and that all source DC circuit breakers are switched off. Repeat Step 3 before continuing.**

Step 4 Disconnect each pair of power cables and the ground cable from the DC-input terminal studs as follows (Figure 5-27):

Caution Before removing cables, be sure to note the color for each type of cable (positive, negative, and ground). Because there is no color code standard for source DC wiring, you must be sure which power cables are connected to the proper positive (+) and negative (–) terminal studs. Typically, green (or green and yellow) indicate a ground cable, while power cable leads may be labeled positive (+) or negative (–). Because this is not always the case, the safest way to indicate the polarity of a cable is to note its color and identify it as described in this procedure.

Warning **When disconnecting source DC power cables, always disconnect the ground cable last.**

Beginning with terminal studs A1 (Figure 5-27):

a. Remove the nut and washer from the negative (–) terminal studs and disconnect the cable.

- Label the cable. For example: A1-.

b. Remove the nut and washer from the positive (+) terminal studs and disconnect the cable.

- Label the cable. For example: A1+.

Repeat steps **a**. and **b.** for the remaining pairs of terminal studs.

c. After all power cables are disconnected, remove the nut and washer from the ground terminal studs and disconnect the ground cable.

- Label the cable as “ground”.

Figure 5-27 Disconnecting the Source DC Power Cables

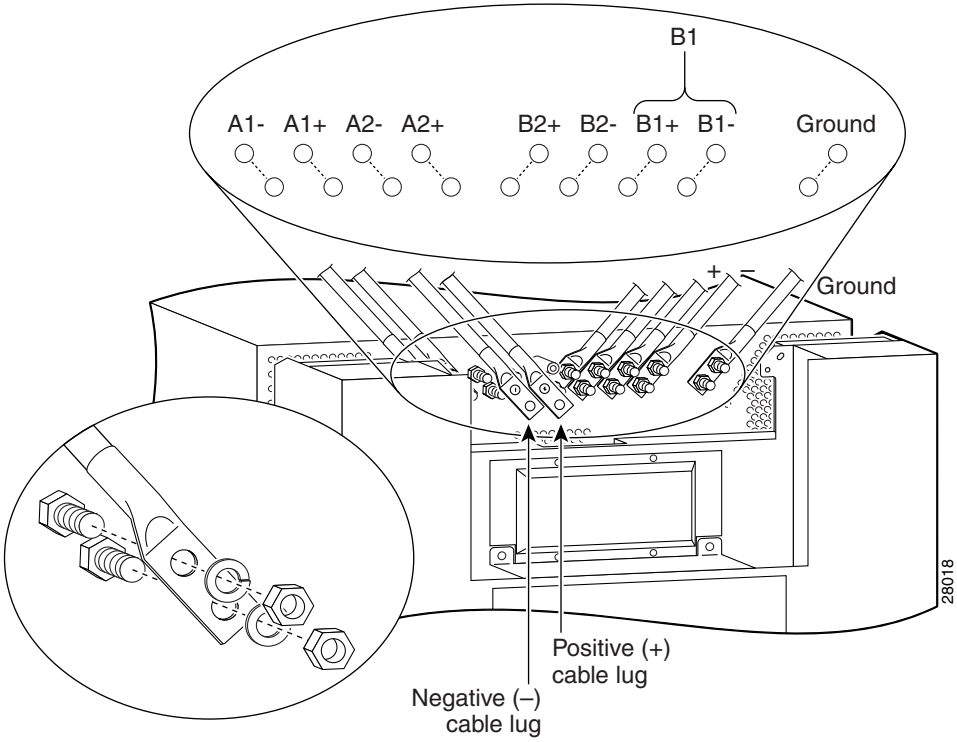

Step 5 Unseat the power shelf from the chassis (Figure 5-28):

a. Loosen the two captive screws on each side of the power shelf.

b. Loosen the ejector jackscrew to unseat the power shelf from the connectors on the chassis power interface panel.

Warning **The DC-input power shelf weighs approximately 10.2 pounds (4.6 kg). Use two hands to remove the power shelf.**

Figure 5-28 Unseating the Power Shelf

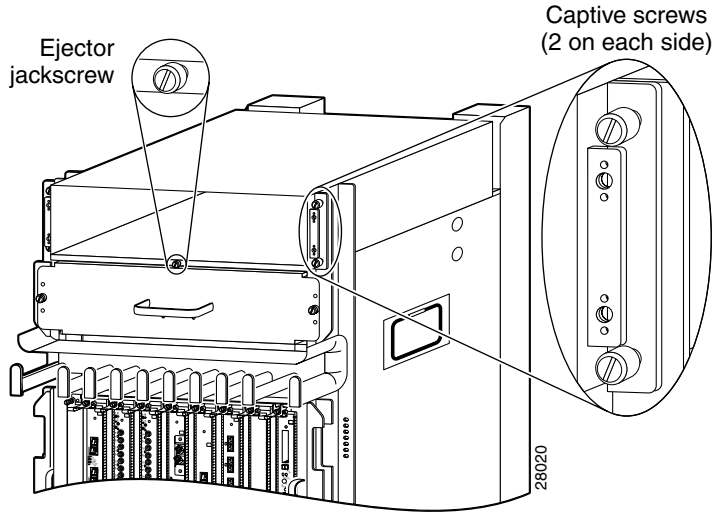

Step 6 Remove the power shelf by grasping the flanges on each side and slowly pulling the shelf along the chassis track to remove it (Figure 5-29):

Figure 5-29 Removing the DC-Input Power Shelf

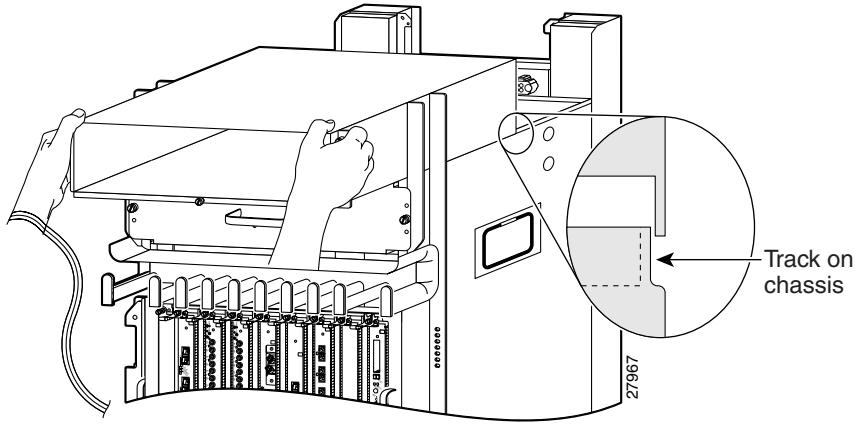

Step 7 Insert the new power shelf halfway into the chassis.

Step 8 Connect the power shelf to the chassis power interface panel connectors (Figure 5-30):

a. Be sure the holes on each side of the power shelf are aligned with the guide pins on each side of the chassis.

b. Carefully slide the power shelf into place until its two connectors just mate with the power interface panel connectors.

Caution To prevent damage to the interface connectors, do not use excessive force when inserting the power shelf into the chassis.

Figure 5-30 Connecting the DC-Input Power Shelf

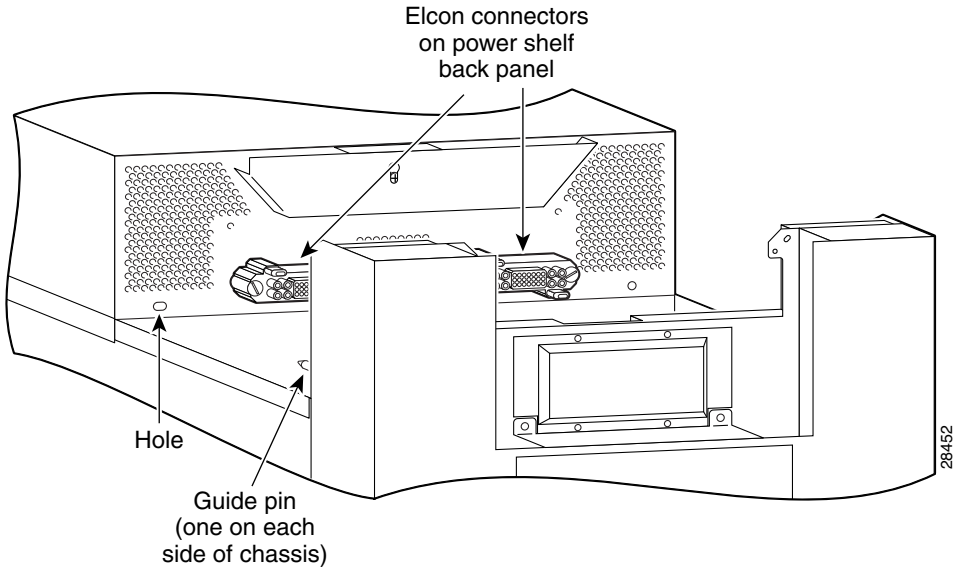

Step 9 Seat the power shelf to the chassis (Figure 5-31):

a. Tighten the ejector jackscrew.

b. Tighten the captive screws on each flange.

Warning **The DC-input power shelf weighs approximately 10.2 pounds (4.6 kg). Use two hands to remove the power shelf.**

Figure 5-31 Seating the DC-Input Power Shelf

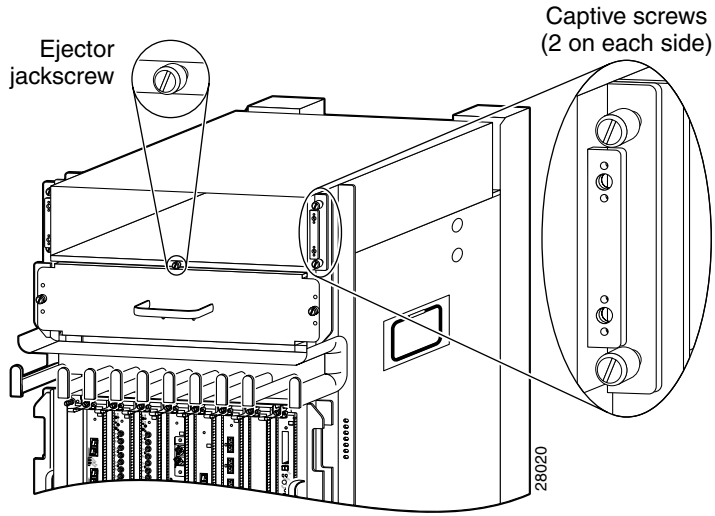

Step 10 Reconnect the ground and each pair of power cables to the DC-input terminal studs as follows (Figure 5-32):

Caution Be sure to connect the cables according to the color coding notes and labels you made in Step 4.

Warning **When reconnecting source DC power cables, always connect the ground cable first.**

a. Reconnect the ground cable to the ground terminal studs.

Beginning with terminal studs B2:

b. Reconnect the positive cable to the positive (+) terminal studs. For example: B2+.

c. Reconnect the negative cable to the negative (–) terminal studs. For example: B2-.

Repeat steps **b** and **c** for the remaining pairs of terminal studs.

Figure 5-32 Reconnecting the Source DC Power Cables to the Power Shelf

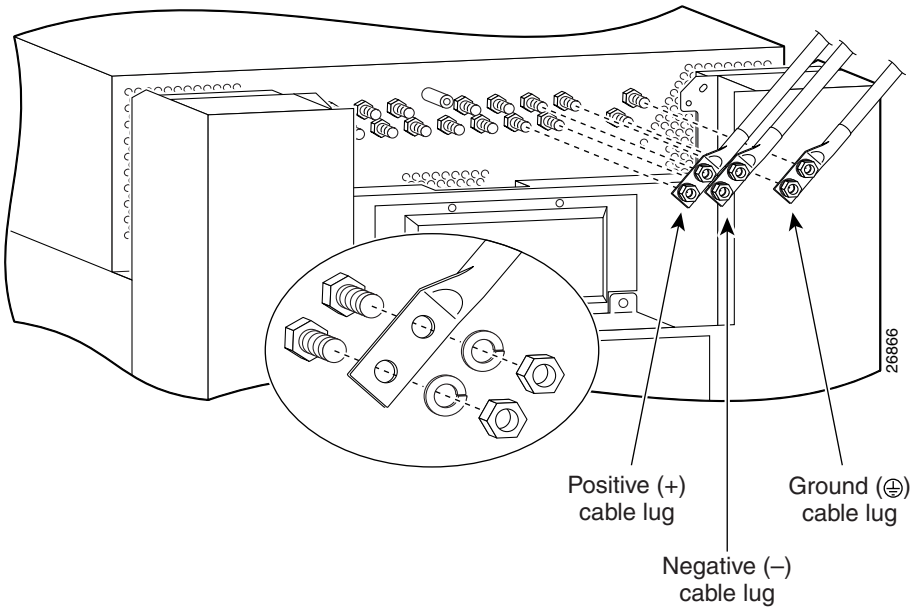

Step 11 Power on the source DC circuit breakers for the PEMs.

Step 12 Verify the polarity and voltage readings across the pairs of positive and negative terminal studs:

- All voltage readings should be –48 to –60 VDC

Caution If any of the voltage readings are not within the specified range, do not proceed. Check for correct polarity and DC source voltage.

Step 13 Reinstall the power cable cover (Figure 5-33).

Figure 5-33 Reinstalling the Source DC Power Cable Cover

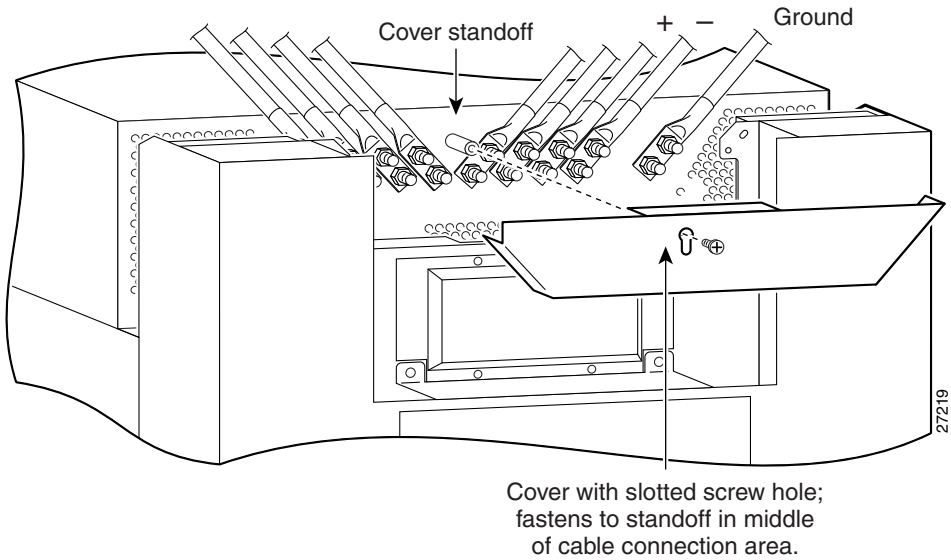

Step 14 Power off the source DC circuit breakers for the PEMs.

Step 15 Install all of the DC PEMs as described in the "Removing and Replacing a DC PEM" procedure on page 5-31 beginning with Step 5.

Removing and Replacing Cards from the Chassis

This section contains the procedures to remove cards from the card cages in the chassis. For additional information about specific types of cards, see Chapter 1, "Product Overview".

Removing and Replacing RP and Line Cards from the Upper and Lower Card Cages

This section describes the procedures for removing and installing a router processor (RP) card or a line card from the upper or lower card cage. The upper and lower card cages have 9 slots, and the lower card cage is a reverse image of the top card cage. Alarm cards can only be installed in their specific slots which are labeled as "Alarm Card".

Caution Handle all cards by the metal card carrier edges only; avoid touching the board or any connector pins. After removing a card, carefully place it in an antistatic bag or similar environment to protect it from ESD and dust in the optic ports (fiber-optic line cards).

Use the following procedure to remove and replace a line card or RP from the card cage:

Step 1 Disconnect any cables from the card.

Step 2 Remove the card:

a. Loosen the captive screws at the top and bottom of the front panel (Figure 5-34a).

b. Pivot the ejector levers to unseat the card from the backplane connector (Figure 5-34b.)

c. Slide the card out of the slot (Figure 5-34c) and place it directly into an antistatic bag or other ESD-preventive container.

Figure 5-34 Removing a Line Card from the Line Card and RP Card Cage

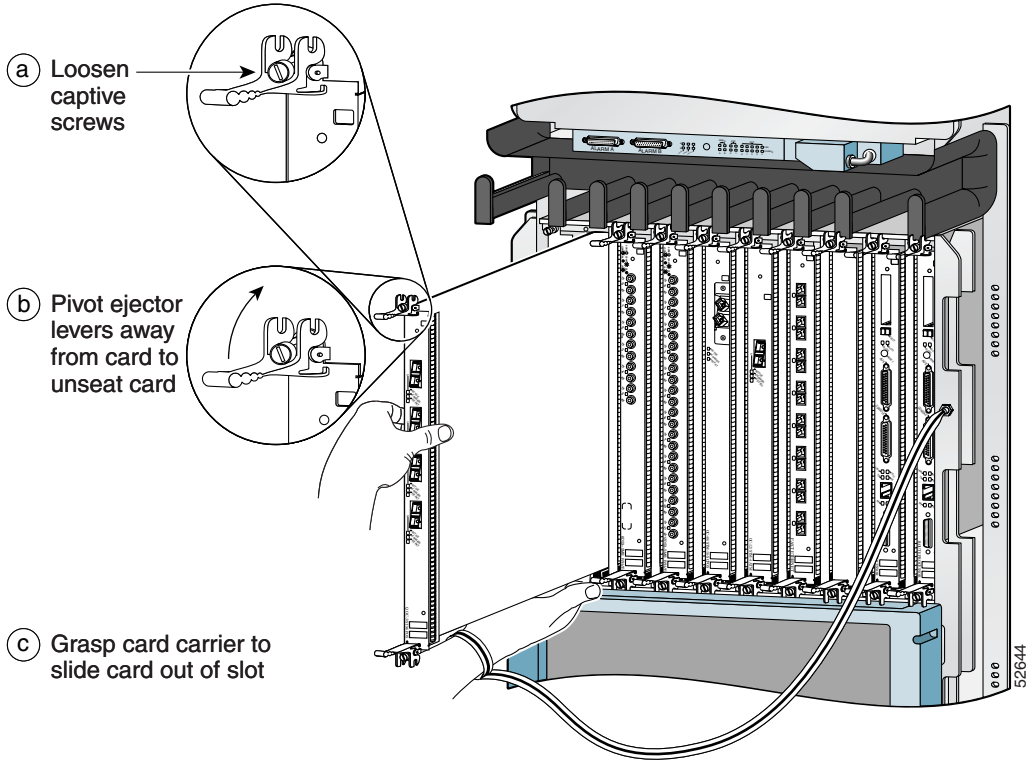

Step 3 Replace the card by reversing the procedures in Steps 1 and 2.

Removing and Replacing an Alarm Card

The router is equipped with two alarm cards. One card occupies the dedicated far left slot of the upper card cage; the second occupies the dedicated far right slot of the lower card cage (see Figure 5-35).

The alarm card slot differs from the rest of the card cage slots: it is physically narrower, has a different backplane connector, and is labeled as an “Alarm Card” slot. Alarm cards can only be installed in these two slots.

Figure 5-35 Alarm Card Locations in the Upper and Lower Card Cages

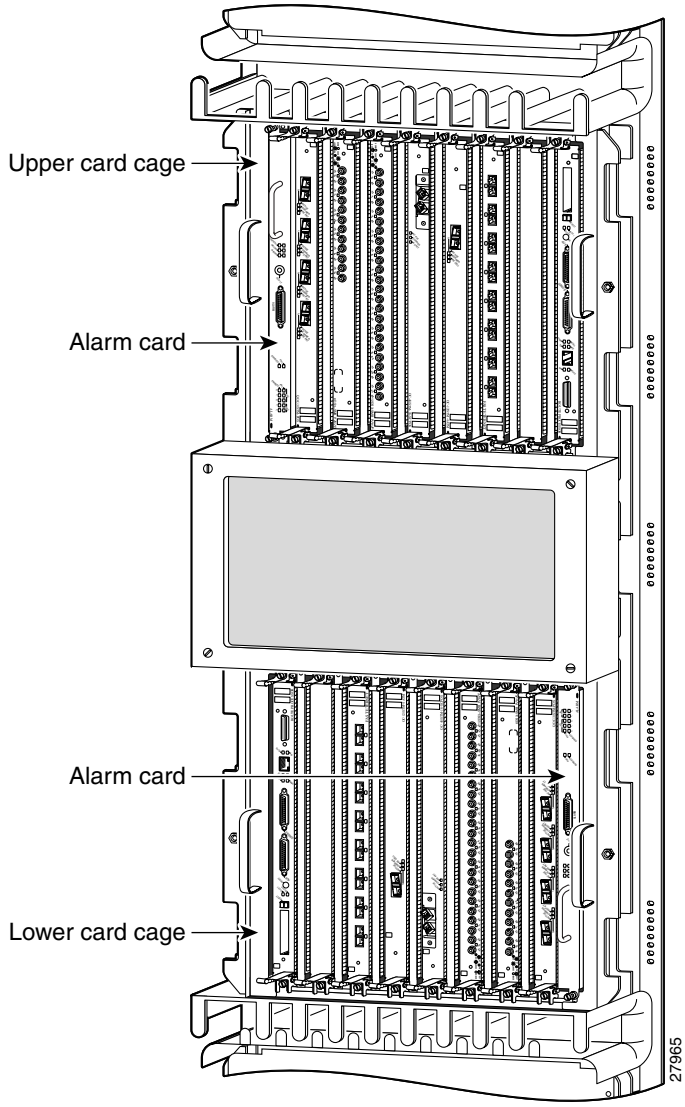

Use the following procedure to remove and replace an alarm card from either the top or bottom card cage.

Caution To ensure proper alarm card screw alignment, line card slots adjacent to the alarm cards must always be populated.

Step 1 Disconnect any cables from the alarm card.

Step 2 Remove the alarm card:

a. Loosen the captive screws at the top and bottom of the front panel (Figure 5-36a).

b. Pull the card out of the slot (Figure 5-36b) and place it directly into an antistatic bag or other ESD-preventive container.

Figure 5-36 Removing an Alarm Card from the Upper Card Cage

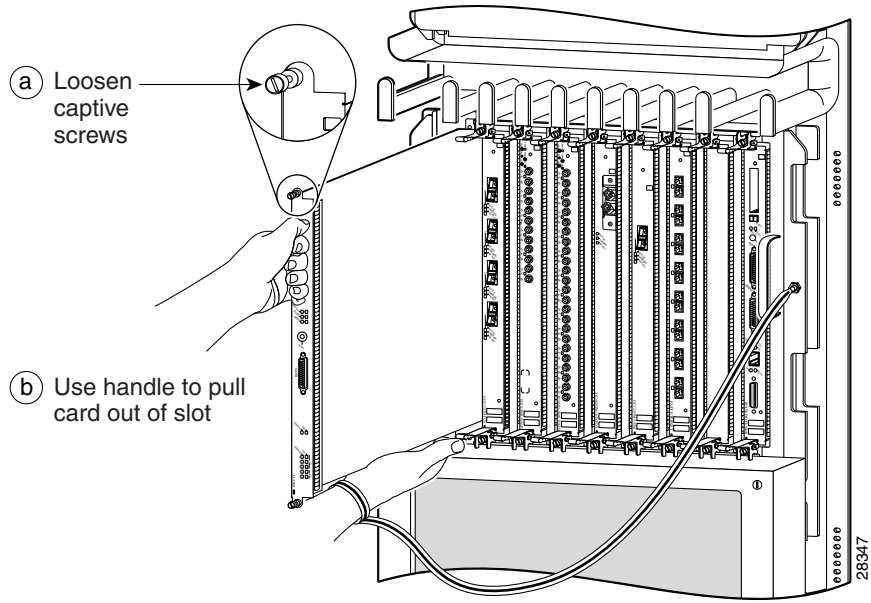

Step 3 Replace the card by reversing the procedures in Steps 1 and 2.

Removing and Replacing Switch Fabric Cards

The switch fabric card cage is located behind the air filter door on the front of the chassis. The card cage has five keyed, vertical card slots for the CSCs and SFCs. CSCs are installed in the left two card slots (labeled CSC 0 and 1); SFCs are installed in the right three card slots (labeled SFC 0, 1, and 2).

Use the following procedure to remove and replace switch fabric cards.

Step 1 Loosen the 4 captive screws on the air filter door and pivot the door open (Figure 5-37).

Figure 5-37 Opening the Chassis Air Filter Door

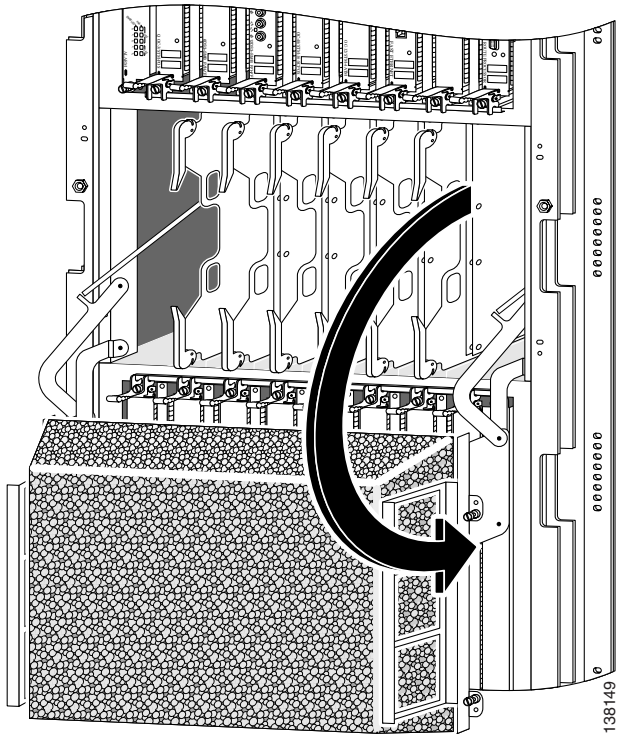

Step 2 Remove the card:

a. Pivot the ejector levers to unseat the card from the backplane connector.

b. Grasp the card by its metal card carrier and slide the card out of the slot (Figure 5-38).

– Place the card directly into an antistatic bag or other ESD-preventive container.

Figure 5-38 Removing a Card from the Switch Fabric Card Cage

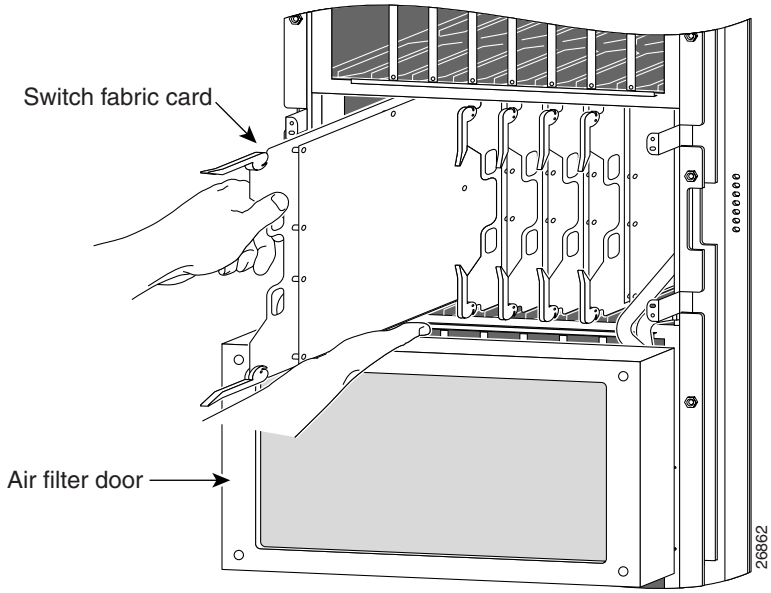

Step 3 To install the card, reverse the procedure in Step 2.

Step 4 Close the air filter door and tighten the captive screws.

Removing and Installing a Chassis

This section provides the procedures to remove and replace a chassis. You may need to perform this procedure to replace a defective chassis or move it to another location. These instructions include the steps directing you to removal and replacement instructions for individual components such as power supplies and line cards.

Because you are removing all the components (except the air filter) from the defective chassis and then reinstalling them in the replacement chassis, the procedures that follow are based on the following prerequisites:

- The replacement chassis, mounted on its own scissor-jack platform, is temporarily placed within reach of the rack in which the defective chassis is installed, and is temporarily connected to the same grounding system as the defective chassis.
- A spare scissor-jack platform with the anchor clips and bolts (that came with the original chassis) is available to remove the defective chassis from the equipment rack.
- Components are transferred from the defective chassis directly to the replacement chassis.
- The replacement chassis is installed in the equipment rack after all components are installed.

This approach has the advantage of protecting system components against damage by eliminating the need to store them, even temporarily, outside their card cages. It also helps ensure that the physical configuration of the router is maintained because each transferred component is installed in the same location in the replacement chassis that it occupied in the defective chassis.

Procedures for removing and installing the chassis are described in the following sections:

- Preparing the Replacement Chassis, page 5-54
- Preparing the Installed Chassis for Removal, page 5-54
- Removing and Installing System Components, page 5-55
- Removing and Installing System Components, page 5-55
- Removing the Chassis from the Equipment Rack, page 5-56
- Installing the Replacement Chassis, page 5-61

Preparing the Replacement Chassis

Before you can begin to install components in the replacement chassis, you need to temporarily connect the central office grounding system or interior equipment grounding system. You can make this connection when the replacement chassis and scissor-jack platform has been placed near the rack site.

See "NEBS Supplemental Unit Bonding and Grounding Guidelines" section on page 2-21 for information about making these connections.

Preparing the Installed Chassis for Removal

Use the following procedure to prepare the installed chassis for removal.

Step 1 Power off the router (see Powering Off the Router, page 5-2).

Step 2 Power off the circuit breakers to the power supplies.

Step 3 Disconnect the power cords from the power shelf:

- For a standard AC power shelf, see Step 2 of Removing and Replacing the Standard AC-Input Power Shelf, page 5-19.
- For an optional AC power shelf, see Step 2 of Removing and Replacing the Optional 2-Level AC-Input Power Shelf, page 5-24.
- For a DC power shelf, see Steps 2, 3, and 4 of Removing and Replacing the DC Power Shelf, page 5-37.

Step 4 Remove the front doors (see Removing and Installing Front Doors, page 5-3).

Step 5 Disconnect RP cables connected to the console port, auxiliary port, or either of the Ethernet ports, RJ-45 or MII.

Label each of the RP cables before you disconnect the cables.

Step 6 Disconnect the cables from each alarm card.

Label each of the alarm card cables before you disconnect them.

Step 7 Disconnect the line card interface cables:

a. Identify the type of line card and its slot number. Write this information on a piece of paper before you disconnect the cables. You'll need this information when you reinstall the line cards.

b. Identify the line card cable and its port connection. Label the cable with this information.

c. Loosen the captive screw at each end of the line card cable-management bracket and pull the cable-management bracket away from the line card.

d. Carefully remove the cables from the cable tray and carefully place the cable bundle out of the way.

e. Repeat steps **a** through **d** for each line card.

Step 8 Remove the vertical cable-management troughs (see Attaching the Vertical Cable-Management Trough, page 3-23).

Removing and Installing System Components

Use the following procedure to remove and install system components from one chassis to another.

Step 1 Remove the blower modules and then install them into the replacement chassis. (see the "Removing and Replacing Blower Modules" section on page 5-10).

Step 2 Remove the power supplies and the power shelf and then install them into the replacement chassis (see "Removing and Replacing AC and DC Power Subsystem Components" section on page 5-14).

Step 3 Remove the cards from all three card cages and then install them into the replacement chassis (see "Removing and Replacing Cards from the Chassis" section on page 5-46).

Removing the Chassis from the Equipment Rack

Use the following procedure to remove the chassis from the equipment rack.

Warning **Two people are required to remove the chassis from the equipment rack.**

Step 1 Remove all grounding connections to the chassis (See "NEBS Supplemental Unit Bonding and Grounding Guidelines" section on page 2-21).

Step 2 Position the scissor-jack platform from the original router shipping package in front of the rack-mounting platform in the rack (Figure 5-39).

Step 3 Turn the scissor-jack screw counterclockwise to slowly raise the top of the scissor-jack platform to the same height as the top of the rack-mounting platform. (Figure 5-39.)

Figure 5-39 Positioning the Scissor-Jack Platform to Extract the Chassis

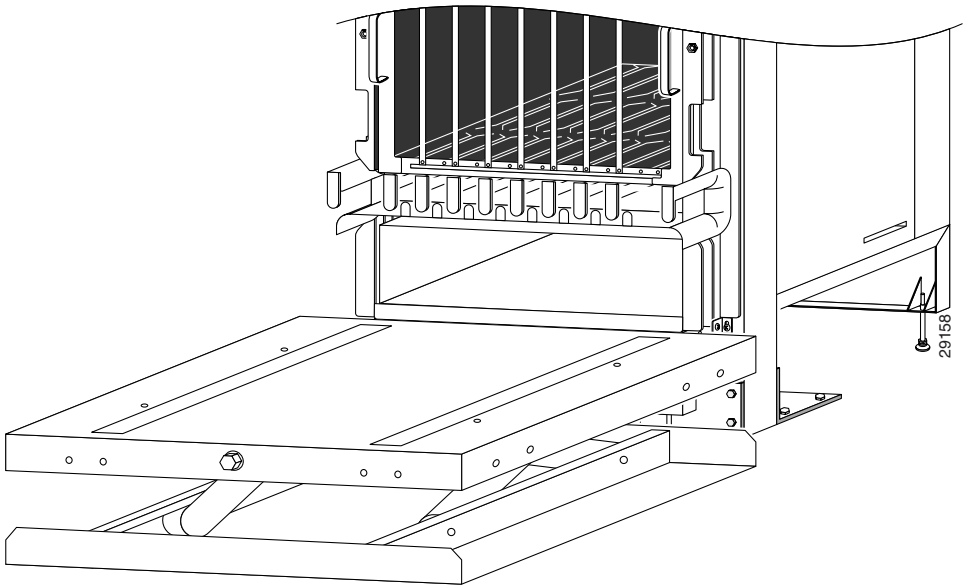

Step 4 Working from the top of the chassis down, remove the screws that secure the chassis to the mounting flanges on the rack (Figure 5-40).

- Set the screws aside for use to install the replacement chassis.

Warning **The chassis is still supported by the rack-mounting platform installed in the bottom of the rack, but should be held to prevent the possibility of tipping out of the front of the rack.**

Figure 5-40 Removing the Mounting Screws

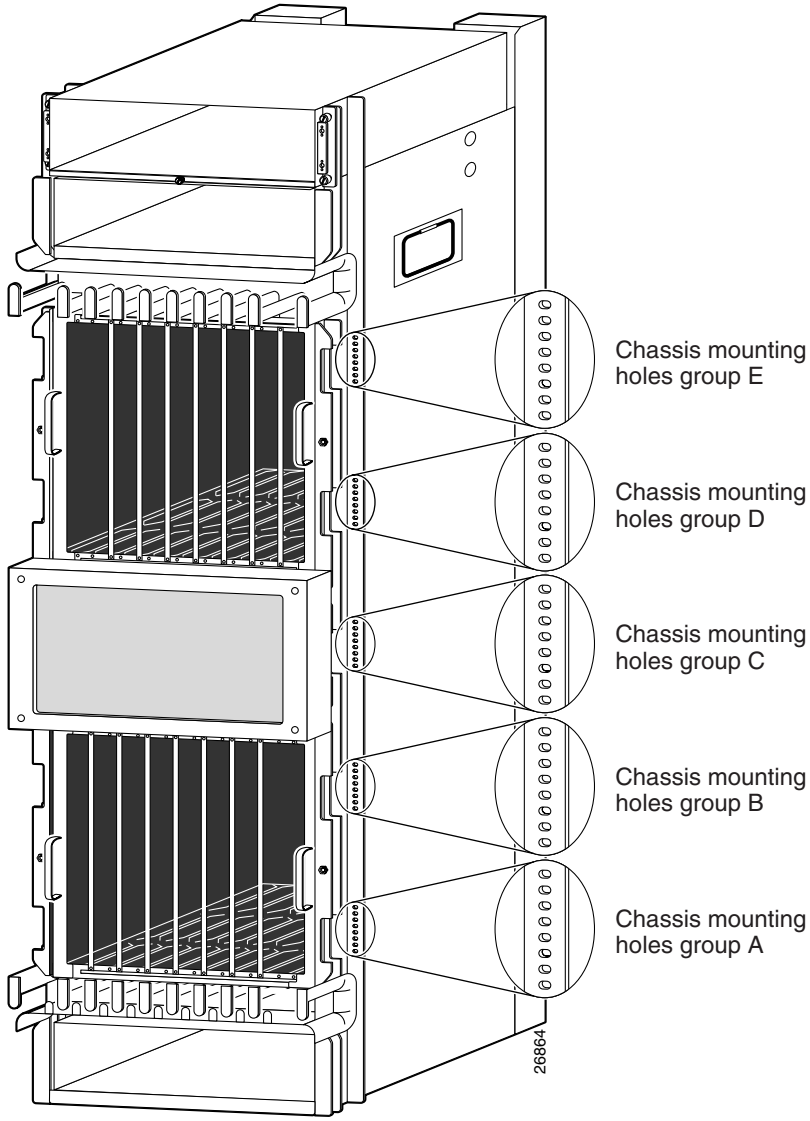

Step 5 Position one person in front of the chassis to support and guide it while the second person slowly pushes the chassis to slide it off the rack-mounting table and onto the scissor-jack platform.

Step 6 Install the four chassis anchor clips through the slots in the bottom of the chassis:

Warning **One person should be holding the side of the chassis to prevent it from tipping.**

a. Align the holes with the bolt holes in the platform.

b. Insert and tighten the four bolts to prevent the chassis from shifting on the scissor-jack platform (Figure 5-41).

Figure 5-41 Securing the Chassis to the Scissor-Jack Platform

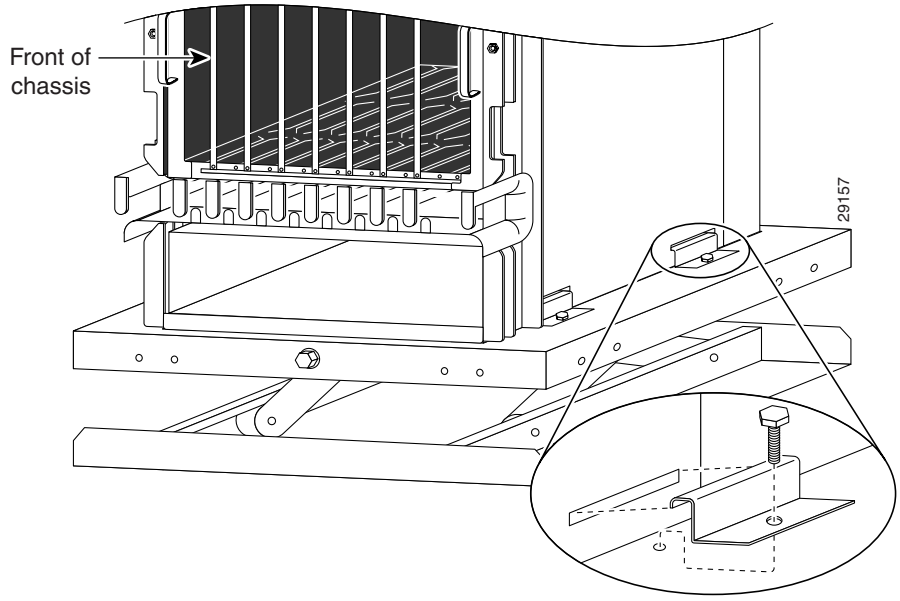

Step 7 Turn the scissor-jack screw clockwise to slowly lower the scissor-jack platform (Figure 5-42).

Figure 5-42 Closing the Scissor-Jack Platform to Lower the Chassis

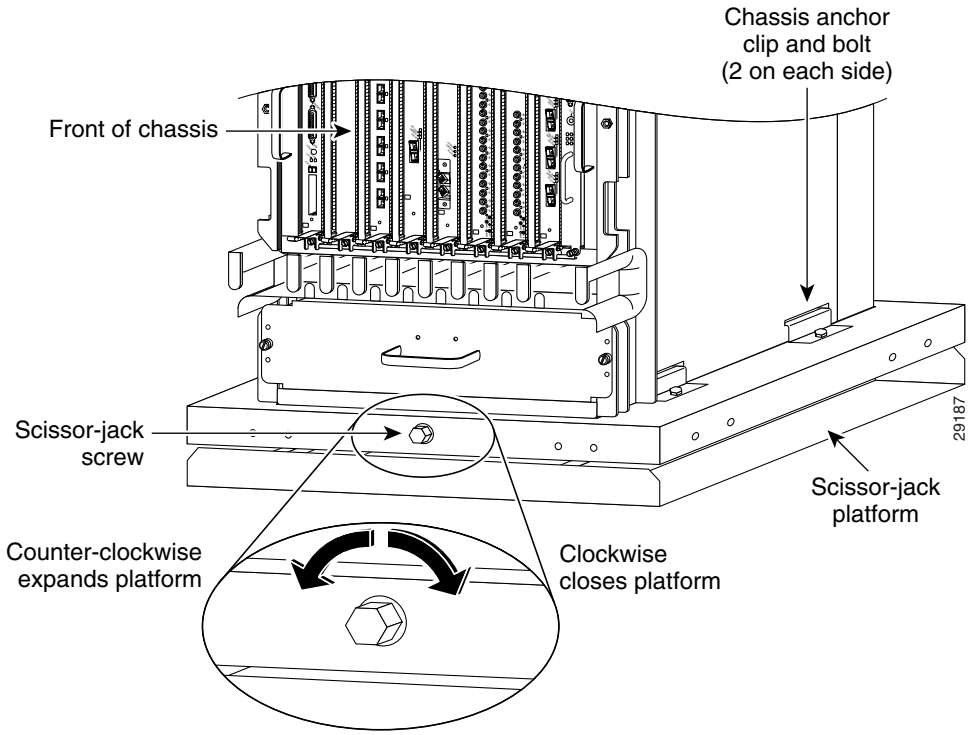

Step 8 Slide the chassis and scissor-jack platform onto a safety hand truck with outrigger wheels and secure it with the locking safety strap.

- Move the chassis to a level solid floor where the chassis can be repackaged for shipping.
- Use the packaging and unpacking instructions that came with the replacement chassis to repack and ship a defective chassis to the factory.

Installing the Replacement Chassis

Use the following procedure to install the replacement rack in the chassis.

Step 1 Disconnect the temporary ground connections to the replacement chassis.

Step 2 Install the chassis into the rack (see Rack-Mounting the Router Chassis, page 3-6).

Step 3 Connect all ground connections to the chassis (see Supplemental Bonding and Grounding Connections, page 3-19).

Step 4 Attach the vertical cable management troughs (see Attaching the Vertical Cable-Management Trough, page 3-23).

Step 5 Connect all line card interface cables using the notes and labeling you created when disconnecting them from the defective chassis.

Step 6 Connect power cables to the router (see Connecting Power to the Power Shelf, page 3-34).

Step 7 Power on the router.

Removing and Replacing a Power Bus Board Fuse

There are two user-replaceable fuses on the power bus board inside the power interface panel:

- The fuse labeled F1 protects the MBus controller module.
- The fuse labeled F2 protects the 5.1 VDC bias voltage for the current monitoring (Imon) signal and the voltage monitoring (Vmon) signals on AC power subsystems.

Note Fuse F2 is used only in AC-input power shelves. It is not used in DC-input power shelves. Spane fuses can be ordered from Cisco as part number: PWR-2A/125V-FUSE=.

Use the following procedure to replace a fuse on the power bus board.

Step 1 Power off the router.

Warning **The router must be powered down before a fuse can be removed and replaced.**

Step 2 Remove the power bus board MBus access cover by loosening the four captive screws (Figure 5-43).

Figure 5-43 MBus Controller Access Cover

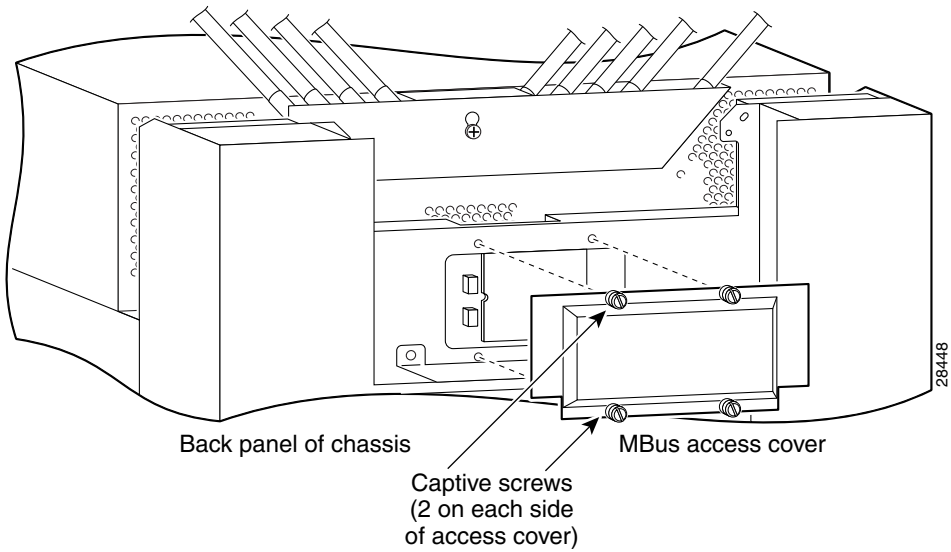

Step 3 Remove the fuse from the fuse holder using a non-conducting fuse extraction tool (Figure 5-44).

Step 4 Insert the replacement fuse using the fuse extraction tool to hold the replacement fuse, align the fuse with the opening in the fuse holder.

Step 5 Reinstall the MBus access cover.

Step 6 Power on the router.

Figure 5-44 Removing and Replacing a Power Bus Board Fuse

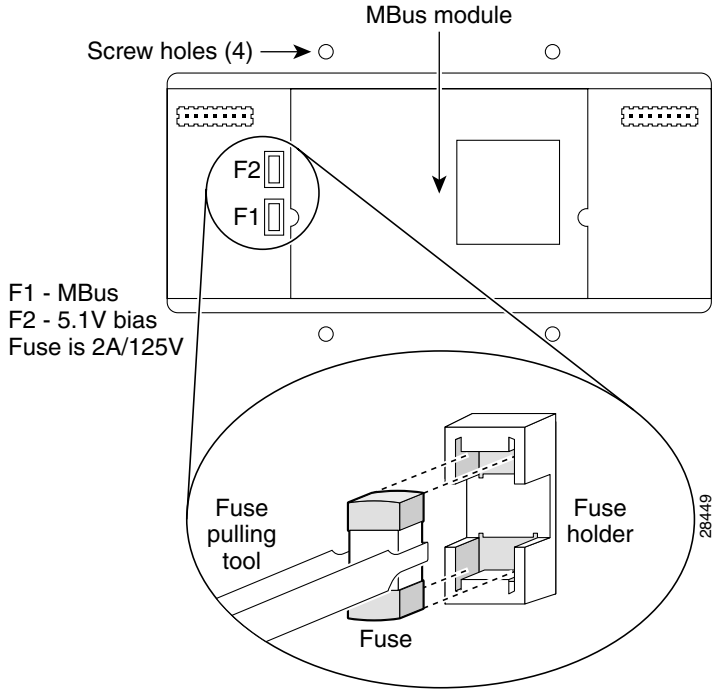

Upgrading a Cisco 12000 Series Router to a Cisco XR 12000 Series Router

A Cisco 12416 series router can be upgraded to a Cisco XR 12416 router by updating the line cards and software images. For information on this process, including supported line cards and software upgrade procedures, please refer to the Cisco document, *Upgrading a Cisco 12000 Series Router from Cisco IOS Software to Cisco IOS XR Software*.

APPENDIX A

Technical Specifications

This appendix includes the following sections:

- Router Specifications, page A-1
- Compliance and Safety Information, page A-5

Router Specifications

The router specifications are presented in the following four tables:

- Table A-1, “Physical Specifications for Cisco 12000 Series Routers”
- Table A-2, “AC Electrical Specifications”
- Table A-3, “DC Electrical Specifications”
- Table A-4, “Environmental Specifications”

Table A-1 Physical Specifications for Cisco 12000 Series Routers

Description	Value
Chassis height	
• With standard AC-input power shelf or DC-input power shelf	71.5 in. (181.6 cm); 72.5 in. (184.1 cm) with front doors installed
• With optional AC-input power shelf	77.63 in. (197.2 cm); 79.11 in. (200.9 cm) with front doors installed
Chassis width	17.25 in. (43.8 cm) 19.0 in. (48.3 cm) including chassis rack-mount flanges and front door width
Chassis depth	22.0 in. (55.9 cm) 26.25 in. (66.7 cm) including cable management system and front covers
Weight	
• Chassis only, standard power shelf	140 lb (64 kg)
• Chassis only, optional AC-input power shelf	160 lb (73 kg)
• Chassis fully configured, using all card slots, AC-input power shelf, and 3 AC-input power supplies	412 lb (187 kg)
• Chassis fully configured, using all card slots, AC-input power shelf, and 4 AC-input power supplies	440 lb (200 kg)

Table A-2 AC Electrical Specifications

Description	Value
Power	
• Standard subsystem (3 power supplies)	4800 W maximum (for 3 AC-input power supplies—N+1 redundancy)
• Optional subsystem (4 power supplies)	4800 W maximum (for 4 AC-input power supplies—N+2 redundancy)
Rated input voltage[1]	200 to 240 VAC nominal (range: 180 to 264 VAC)
Rated input line frequency[1]	50 to 60 Hz nominal (range: 47 to 63 Hz)
Input current rating[1]	13 A maximum @ 200 to 240 VRMS
Source AC service requirement[1]	20 A North America; 16 A international

1. For each power supply module (three in the standard shelf; four in the optional shelf).

Caution To ensure that the chassis configuration complies with the required power budgets, use the on-line power calculator. Failure to properly verify the configuration may result in an unpredictable state if one of the power units fails. Contact your local sales representative for assistance.

Table A-3 DC Electrical Specifications

Description	Value
Power	4800 W maximum
Rated input voltage[1]	–48 VDC nominal in North America –60 VDC nominal in the European Community (range: –40.5 to –72 VDC (–75 VDC FOR 5mS))
Input current rating	60A maximum @ 40.5 VDC
Source DC service requirement	Sufficient to supply the rated input current. Local codes apply.

1. For each PEM.

Caution To ensure that the chassis configuration complies with the required power budgets, use the on-line power calculator. Failure to properly verify the configuration may result in an unpredictable state if one of the power units fails. Contact your local sales representative for assistance.

Table A-4 Environmental Specifications

Description	Value
Temperature	Operating: 32° to 104°F (0° to 40°C)
	Nonoperating: –4° to 149°F (–20° to 65°C)
Humidity	Operating: 10 to 90% noncondensing
	Nonoperating: 5 to 95% noncondensing
Altitude	Operating: 0 to 10,000 ft (0 to 3,000 m)
	Nonoperating: 0 to 15,000 ft (0 to 4,570 m)
Heat dissipation	16,378 BTU/hr maximum
Acoustic noise	70 dBa maximum
Shock	Operating (halfsine): 21 in./sec (0.53 m/sec)
	Nonoperating (trapezoidal pulse): 20G[1], 52 in./sec (1.32 m/sec)
Vibration	Operating: 0.35 Grms[2] from 3 to 500 Hz
	Nonoperating: 1.0 Grms from 3 to 500 Hz

1. G is a value of acceleration, where 1G equals 32.17 ft/sec^2 (9.81 m/sec^2).
2. Grms is the root mean square value of acceleration.

Compliance and Safety Information

The Cisco 12016, Cisco 2416 and Cisco 12816 routers are designed to meet the regulatory compliance and safety approval requirements. Refer to the *Regulatory Compliance and Safety Information for the Cisco 12000 Series Router* (Document Number 78-4347-xx) if you require additional compliance information (see the "Obtaining Documentation and Submitting a Service Request" section on page -xiv for site information).

APPENDIX B

Site Log

The site log provides a historical record of all actions relevant to the operation and maintenance of the router. Keep your site log in a convenient place near the router where anyone who performs the maintenance has access to it.

Site log entries might include the following:

- Installation progress—Make entries in the site log to record installation progress. Note any difficulties and remedies during the installation process.
- Upgrades or removal and replacement procedures—Use the site log as a record of router maintenance and expansion history.

  Each time a procedure is performed on the router, update the site log to show the following:

  - Any FRU that is installed, removed, or replaced
  - Any router configuration changes
  - Software upgrades
  - Corrective or preventive maintenance procedures performed
  - Intermittent problems
  - Related comments

The following page shows a sample site log page. You can make copies of the sample or design your own site log page to meet the needs of your site and equipment.

Date	Action Performed or Symptoms Observed	Initials

INDEX

Numerics

100BASE-T
- maximum cable lengths 2-32
- specifications 2-32
- transmission specifications 2-32

100BASE-TX,connections 3-31

10BASE-T
- connections 3-31
- ports 2-24, 3-29

25-pin D-subconnector 2-33

A

AC-input power
- cord length 2-18
- cord plugs and coupler 2-17
- line frequency A-3
- rated input voltage A-3
- service requirements 3-34
- shelf 1-4, 1-5, 1-7
- supply A-3

acoustic noise specification A-4

air filter 3-20

air filter required for operation 1-39

airflow
- clearance around chassis 4-37
- clearance around chassis (caution) 1-38
- temperature sensors 1-39

alarm card
- cable connection (figure) 3-33
- connector location 2-33, 3-33
- description 1-18
- LEDs,critical, major, and minor alarms 1-18
- site alarm connector 1-18
- status LEDs 4-28

alarm display
- Alarm A and Alarm B connector pinout 3-33
- connector pinout 2-34, 3-33

alphanumeric LED displays
- description 1-28
- RP 4-17, 4-18
- using for troubleshooting 4-3

altitude specifications, system A-4

anchor clips, removing 3-15

asynchronous serial ports
- See auxiliary port

attaching cables,auxiliary and console port 3-29
autosensing 2-28, 3-31
auxiliary port
  connecting devices to 2-26, 3-31
  connector pinout 2-26
  description 1-26

B

blank card filler panel (caution) 1-20
blank card filler panels 1-20
blower module
  air circulation clearances 1-38
  controller card 1-39
  description 1-36, 1-39
  fan
    failure 1-39, 4-36
    speed control 1-39
  features 1-37
  LEDs 1-37
  removing 5-46
bonding and grounding,cable receptacle locations (figure) 2-22, 3-21, 3-22
bonding and grounding cable
  receptacle locations 2-22, 3-21, 3-22
bonding and grounding cable receptacle locations 2-22

C

cable-management system recommendations 2-12
cable receptacle locations 2-22
cables
  100BASE-T, maximum lengths 2-32
  AC-input power 2-18
  attaching alarm card 2-33, 3-33
  attaching alarm display 3-33
  attaching bonding and grounding posts 3-19
  console port 2-27
  DC-input power 2-18
  DC-input power cable lug 2-19
  interference 2-23
  polarity, DC-input power shelf 2-19
cables, attaching
  bonding and grounding cable 3-19
  line cards 3-25
  polarity, DC-input power shelf 3-36
  PRP 3-30
  PRP Ethernet port 3-31
card handling,ESD protection (caution) 5-46
center-mounting 2-10
center-mount rack-mounting bracket installation 3-10
center-mount rack-mounting brackets
  installing brackets on rack (optional) 3-7
  rack-mounting option 2-9

chassis
airflow clearance (caution) 1-38
anchor clips, removing 3-15
footprint dimensions 2-13
installing in a rack 3-6
lifting (caution) 2-6
rack-mounting hole groups 3-18
chassis airflow clearance 1-38
Cisco Express Forwarding (CEF) 2-28
Cisco XR 12416 router,front view 1-3
clearances, air circulation 1-38
clips, bend radius 3-25
clock, system 1-17
clock and scheduler card 1-17
connecting,alarm card cable 2-33
connection guidelines, PRP 2-25 to 2-32
connector
auxiliary port 2-26
console port 2-27
connectors,alarm display external alarm 3-33
console port
connecting devices to 3-30
data transmission rate settings 3-29
description 1-26
pinouts 2-27
CSC
scheduler 1-17
switch fabric 1-17
system clock 1-17

D

DCE RJ-45 interface 2-24
DC-input power
entry module input voltages 1-13
entry module power rating A-4
entry module rated input voltage A-4
front view (figure) 1-11
polarity, cable connections 2-19
power specifications A-4
shelf back panel 1-12
shelf polarity on cable connections 3-36
shelf specifications A-4
DC-input power entry module,removing 5-34
DC-input power shelf,terminal connector locations 3-37
DC-input power shelf wiring 2-21, 3-36
DTE RJ-45 interface 2-24

E

EIA/TIA-568 compliancy 2-32
electrical specifications
AC-input power A-3
DC-input power subsystem A-4
electromagnetic compatibility 3-34
electromagnetic compatibility (caution) 3-34
electromagnetic interference
See EMI
electromagnetic pulse

See EMP prevention
EMC cautions
blank card filler panels 1-20
power subsystem operation 1-11
EMI prevention 2-23
EMP prevention 2-24
Environmental A-4
environmental monitoring 4-37
environmental specifications A-4
Ethernet port
cable connection (caution) 3-32
connecting devices to 3-31
description 1-24
pinout
RJ-45 connector 2-30
pinout,RJ-45 connector 2-30
Ethernet port cable connection 3-32
excessive insertion force 5-27
excessive insertion force (caution) 5-27

F

Fast Ethernet specifications 2-32
flash memory,card slot 1-24
fuses
power bus board MBus module 5-61
power bus board Vmon and Imon signals 5-61

H

handles for lifting (caution) 2-6
handling cards 5-46
heat dissipation specification, system A-4
humidity guidelines, system A-4

I

IEEE 802.3u specifications 2-32
initialization sequence 4-19
input,AC-input power supply A-3
inserting router 3-14
insertion of router 3-16
installing
bonding and grounding connection 3-20
center-mount rack-mounting brackets 3-10
center-mount rack-mounting brackets (optional) 3-7
Ethernet cables 3-31
router in rack 3-16
installing rack-mounting platform 3-12
interface
attaching cables 3-25 to 3-28
cable connections 2-26
interference, radio frequency 2-23
invisible laser radiation (warning) 2-7

L

laser safety 2-7
LEDs
AC-input power supplies 4-5
alphanumeric displays,line cards 4-26
at startup 4-3
route processor 4-18, 4-19
line card
alphanumeric display 4-26
attaching interface cables 3-25
diagnostics 4-26
network interface cable connection 3-26
RP card cage 1-2
line card and RP card cage 1-2
line frequency, AC-input power supply A-3
lugs 2-19

M

major components 1-1
MBus
power bus board fuses 5-61
using for troubleshooting 4-5
MDI
Ethernet port 3-31
RJ-45 cable connector 3-31
MII Ethernet receptacle,cable specifications 2-32
modem connections 3-29

N

NEBS grounding
See also NEBS connection 3-19
network interface cable 3-26
North American use 3-34
NVRAM
PRP description 1-34
size 4-19

P

part numbers 1-35
PCMCIA,slot 1-24
physical specifications A-2
pinouts
alarm card connector 3-33
alarm display connector 2-34, 3-33
auxiliary port connector 2-26
console port connector 2-27
RJ-45 Ethernet connector (table) 2-30
power
DC-input power entry module A-4
DC-input specifications A-4
recommendations and requirements 2-16 to 2-19
standard AC-input power subsystem 1-4
surge suppression 2-24
power bus board fuses 5-61
power input A-3

power module
AC-input line frequency A-3
AC-input rating A-3
AC-input voltage A-3
DC-input power rating A-4
DC-input rated voltage A-4
DC-input voltages 1-13
power shelf,standard AC-input (figure) 1-4
power shelf operation and EMC 1-11
processor,CPU on the PRP 1-22
PRP
alphanumeric LED displays 4-17, 4-18
auxiliary port 1-26
Cisco IOS XR software images 1-33
console port function 1-26
DRAM configurations 1-33
Ethernet port 1-24
memory components 1-29
NVRAM 1-34
power-on self-test 4-16, 4-34
soft reset switch
function 1-27
usage (caution) 1-27
SRAM 1-34
PRP soft reset (NMI) switch 1-27

R

rack insertion 3-16
rack-mounting
guidelines 2-11
platform installation 3-12
verifying rack dimensions 3-6
rack-mounting options 2-10
radio frequency interference
See RFI prevention
raising router 3-14
removing a line card 5-47
repeaters 2-32
reset switch on PRP 1-27
reverse polarity in DC-input power shelf wiring (caution) 2-21, 3-36
RFI prevention 2-23
RJ-45
1FE cable specifications 2-32
cable
specifications 2-32
cable specifications 2-32
RJ-45 Ethernet receptacle,connector pinout (table) 2-30
router and rack stability (warning) 3-2
router insertion 3-16
RP
LEDs 4-20
LEDs,partial front panel view, figure 4-20
soft reset switch
usage (caution) 4-18
RP soft reset (NMI) switch 4-18

S

safety
- lifting 2-6
- SELV circuit connections 2-24, 3-29

SELV circuit
- connections 2-24, 3-29
- warning 2-24

serial ports, asynchronous
- See auxiliary port; console port

shock specifications, system A-4

show environment 4-14

show environment all 4-37

show environment table 4-37

site requirements
- airflow 2-14
- power 2-19
- rack mounting 2-7, 2-11
- site log B-1
- supplemental earth ground connection 2-21
- temperature and humidity 2-16

soft reset (NMI) switch (caution) 1-27, 4-18

specifications
- acoustic noise A-4
- altitude A-4
- environmental A-4
- Fast Ethernet (100BASE-T) 2-32
- heat dissipation A-4
- humidity A-4
- IEEE 802.3u 2-32
- router dimensions A-2
- router weight A-2
- shock A-4
- temperature A-4

switches,PRP soft reset (NMI) 1-27

switch fabric
- card description 1-17
- clock and scheduler card 1-17
- description 1-16

switch fabric card cage 1-2

synchronized connections 1-16

system
- clock 1-17
- lifting safely 2-6
- power connection guidelines 2-16

T

telco-style rack requirements 2-11

temperature
- sensors 1-39
- system specifications A-4

terminal connector locations,DC-input power shelf 3-37

Token Ring 2-24, 3-29

transmission recommendations
- 100BASE-T 2-32

troubleshooting
- AC-input power supply 4-5

environmental shutdown 4-37
startup problems 4-1

U

unshielded twisted-pair (UTP) cables 2-32
UTP cable 3-31

V

valid lifting grips 2-6
verifying the equipment rack dimensions 3-7
voltage
AC-input power supply A-3
input DC-input power entry module A-4

W

warnings
invisible laser radiation 2-7
router and rack stability 3-2
SELV circuits 2-24
wiring 3-36
wiring
bonding and grounding cable connection 3-19
interference 2-23
RJ-45 Ethernet port connections 2-30