Dynamic Packet Transport (DPT) Line Card Installation and Configuration

Document Order Number: DOC-7815898=

This hardware installation and configuration note contains instructions for installing, configuring, and troubleshooting Dynamic Packet Transport (DPT) line cards on supported Cisco 12000 Series Internet Routers. DPT solutions are based on the Cisco-developed Spatial Reuse Protocol (SRP). SRP is the underlying technology used with Cisco DPT line cards.

Contents

This installation and configuration note includes the following sections:

Corporate Headquarters:
Cisco Systems, Inc., 170 West Tasman Drive, San Jose, CA 95134-1706 USA

Important Information

This section contains important information about the following:

- DPT Line Card Product Numbers
- Router Hardware Installation
- Cisco IOS Software Release Requirements
- Hardware Revision Requirements
- AC-Input Power Supply Requirements
- Memory Options
- Related Documentation

DPT Line Card Product Numbers

Table 1 lists the Cisco product numbers to which this publication applies.

Table 1 DPT Line Card Product Numbers

DPT Line Card	Cisco Product Number
1-Port OC-12c/STM-4c multimode	OC12/SRP-MM-SC-B=
1-Port OC-12c/STM-4c intermediate-reach	OC12/SRP-IR-SC-B=
1-Port OC-12c/STM-4c long-reach	OC12/SRP-LR-SC-B=
1-Port OC-12c/STM-4c extended-reach	OC12/SRP-XR-SC=
4-Port OC-12c/STM-4c ISE extended-reach	4OC12X/SRP-XR-LC=
4-Port OC-12c/STM-4c ISE intermediate-reach	4OC12X/SRP-IR-LC=
1-Port OC-48c/STM-16c short-reach	OC48/SRP-SR-SC-B=
1-Port OC-48c/STM-16c long-reach	OC48/SRP-LR-SC-B=
4-Port OC-48c/STM-16c SFP modules	4OC48/SRP-SFP=
1-Port OC-192c/STM-64c very-short-reach	OC192/SRP-VSR=
1-Port OC-192c/STM-64c short-reach	OC192/SRP-SR-SC=
1-Port OC-192c/STM-64c intermediate-reach	OC192/SRP-IR-SC=

Router Hardware Installation

For Cisco 12000 Series Internet Router hardware installation and configuration information, refer to the installation and configuration guide for your router. The guide includes information on the router switch fabric and how it affects the operation of line cards, as well as line card slot locations, slot width, and other requirements.

Supported Platforms

Table 2 lists the supported router platforms for DPT line cards:

Table 2 DPT Line Card Supported Router Platforms

DPT Line Card	Supported Platform
1-Port OC-12c/STM-4c	All Cisco 12000 Series Routers
4-Port OC-12c/STM-4c ISE	All Cisco 12000 Series Routers
1-Port OC-48c/STM-16c	All Cisco 12000 Series Routers
4-Port OC-48c/STM-16c	All Cisco 12400 Series Routers
1-Port OC-192c/STM-64c	All Cisco 12400 Series Routers

Note A full-fabric router configuration is required. If you have a one-quarter-fabric configuration, you must upgrade to a full-fabric configuration to use DPT line cards. A configuration with two clock scheduler cards (CSCs) is also recommended. For details on the switch fabric, refer to the installation and configuration guide for your router.

Cisco IOS Software Release Requirements

For software configuration information, refer to the Cisco IOS software configuration and command reference publications for the installed Cisco IOS release. Also refer to the Cisco IOS software release notes for additional information.

Table 3 lists the Cisco IOS releases that are compatible with DPT line cards.

Table 3 DPT Line Card and Cisco IOS Release Compatibility

DPT Line Card	Compatible Cisco IOS Release
1-Port OC-12c/STM-4c	12.0(10)S or a later 12.0S release 12.0(11)ST or a later 12.0ST release
4-Port OC-12c/STM-4c ISE	12.0(24)S or a later 12.0S release
1-Port OC-48c/STM-16c	12.0(15)S or a later 12.0S release 12.0(16)ST or a later 12.0ST release
4-Port OC-48c/STM-16c	12.0(23)S or a later 12.0S release
1-Port OC-192c/STM-64c	12.0(23)S or a later 12.0S release

The **show version** and **show hardware** commands display the current hardware configuration of the router, including the system software version that is currently loaded and running. For complete descriptions of **show** commands, refer to the *Cisco IOS Configuration Fundamentals Configuration Guide* and the *Cisco IOS Configuration Fundamentals Command Reference* for the installed Cisco IOS release.

Hardware Revision Requirements

To ensure compatibility with the software, your DPT line card should have a specific hardware revision number. The number is printed on a label affixed to the component side of the card. The hardware revision number is displayed when using the **show version** command.

Table 4 lists the hardware revision number for all DPT line cards.

Table 4 DPT Line Card Hardware Revision Numbers

DPT Line Card	Hardware Revision Number[1]
1-Port OC-12c/STM-4c	73-5188-01 Rev. A0 for multimode 73-5189-01 Rev. A0 for intermediate-reach 73-5190-01 Rev. A0 for long-reach
4-Port OC-12c/STM-4c ISE	73-7479-02 Rev. A0 for intermediate-reach 73-8177-02 Rev. A0 for very-long-reach
1-Port OC-48c/STM-16c	73-4039-08 Rev. A0 for short-reach 73-4181-08 Rev. A0 for long-reach
4-Port OC-48c/STM-16c	73-7452-03 Rev. A0
1-Port OC-192c/STM-64c	73-7909-03 Rev. A0

1. Hardware revision numbers that are higher than those listed are also compatible. These are the minimum required numbers.

AC-Input Power Supply Requirements

In order to use the 4-Port OC-12c/STM-4c ISE DPT line card in the Cisco 12008 Router, the AC-input power supply must have the part number PWR-GSR8-AC-B. If the AC-input power supply part number is 34-0820-01, you must upgrade the AC-input power supply. Refer to the *Cisco 12008 Gigabit Switch Router AC-Input Power Supply Replacement Instructions* publication.

To determine which AC-input power supply is installed in the Cisco 12008 Router, enter the **show diag** command. This command provides the part number of the AC-input power supply that is installed in the router.

```
Router> show diag
```

Memory Options

DPT line card memory options vary by line card. See the "DPT Line Card Memory" section on page 64 for more information.

Related Documentation

This publication describes the basic installation and initial configuration of a DPT line card. For complete configuration information, refer to the following publications:

- *Cisco 12xxx Series Internet Router Installation and Configuration Guide*
- *Spatial Reuse Protocol Feature Guide*

- *Single Ring Recovery Protocol Feature Guide*
- *Cisco IOS Configuration Fundamentals Configuration Guide*
- *Cisco IOS Configuration Fundamentals Command Reference*
- *Cisco IOS Release 12.0S Release Notes for Cisco 12000 Series Internet Routers*
- *Regulatory Compliance and Safety Information for Cisco 12000 Series Internet Routers*

See the "Obtaining Documentation" section on page 84 for information on how to obtain these publications.

Product Overviews

This section includes product overview information for each DPT line card:

- 1-Port OC-12c/STM-4c DPT Line Card Product Overview
- 4-Port OC-12c/STM-4c ISE DPT Line Card Product Overview
- 1-Port OC-48c/STM-16c DPT Line Card Product Overview
- 4-Port OC-48c/STM-16c DPT Line Card Product Overview
- 1-Port OC-192c/STM-64c DPT Line Card Product Overview

1-Port OC-12c/STM-4c DPT Line Card Product Overview

The 1-Port OC-12c/STM-4c DPT line card provides Cisco 12000 Series Internet Routers with two OC-12c/STM-4c, fiber-optic subscriber connector (SC) duplex ports that are configured as one SRP node. It is available with single-mode intermediate- or long-reach optics. A multimode version is also available.

This line card is shown in Figure 1; the optics and connector types for this line card are listed in Table 5.

Figure 1 1-Port OC-12c/STM-4c DPT Line Card

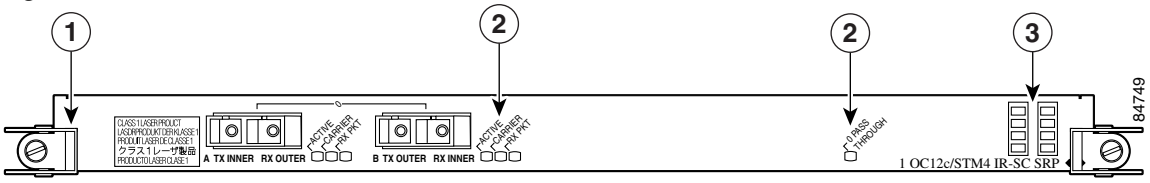

1	Ejector lever (one at each end)	**3**	Alphanumeric LEDs
2	Status LEDs	—	

Table 5 1-Port OC-12c/STM-4c DPT Line Card Optics and Connector Types

Line Card Optics	Connection Method	Connection Type
Multimode	Multimode duplex	SC connector
Intermediate-reach (IR)	Single-mode duplex	SC connector

Table 5 1-Port OC-12c/STM-4c DPT Line Card Optics and Connector Types

Line Card Optics	Connection Method	Connection Type
Long-reach (LR)	Single-mode duplex	SC connector
Extended-reach (XR)	Single-mode duplex	SC connector

4-Port OC-12c/STM-4c ISE DPT Line Card Product Overview

The 4-Port OC-12c/STM-4c Internet Services Engine (ISE) DPT line card provides Cisco 12000 Series Internet Routers with four OC-12c/STM-4c, fiber-optic Lucent connector (LC) duplex ports, configured as two SRP nodes. It is available with extended- or intermediate-reach optics.

This line card is shown in Figure 2; the optics and connector types for this line card are listed in Table 6.

Figure 2 4-Port OC-12c/STM-4c ISE DPT Line Card

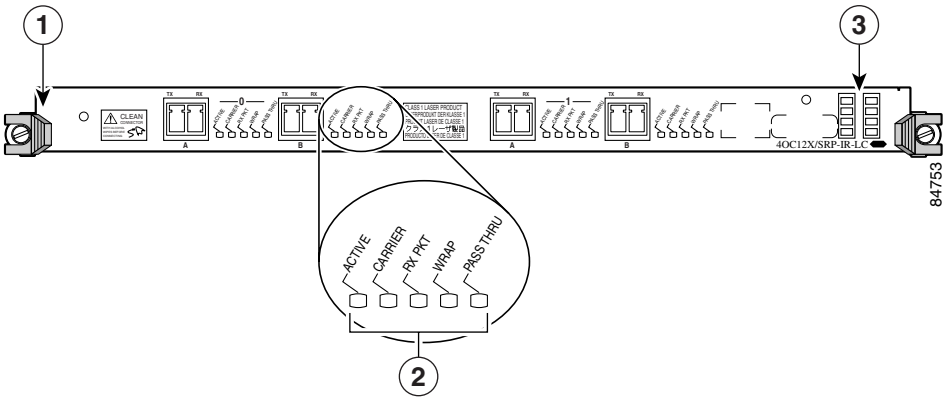

1	Ejector lever (one at each end)	**3**	Alphanumeric LEDs
2	Status LEDs	—	

Table 6 4-Port OC-12c/STM-4c ISE DPT Line Card Optics and Connector Types

Line Card Optics	Connection Method	Connection Type
Extended-reach (XR)	Single-mode duplex	LC connector
Intermediate-reach (IR)	Single-mode duplex	LC connector

1-Port OC-48c/STM-16c DPT Line Card Product Overview

The 1-Port OC-48c/STM-16c DPT line card provides Cisco 12000 Series Internet Routers with one single-mode, OC-48c/STM-16c fiber-optic SC duplex port. It is available with short- or long-reach optics.

Note To create an SRP node with the 1-Port OC-48c/STM-16c DPT line card, you must install and mate two 1-Port OC-48c/STM-16c DPT line cards in a Cisco 12000 Series Internet Router. When two line cards are not mated, each 1-Port OC-48c/STM-16c DPT line card is the equivalent of a single-fiber SRP ring on side B. The single-fiber SRP ring has a wrap at each end to ensure that all data packets reach their destination.

This line card is shown in Figure 3; the optics and connector types for this line card are listed in Table 7.

Figure 3 1-Port OC-48c/STM-16c DPT Line Card

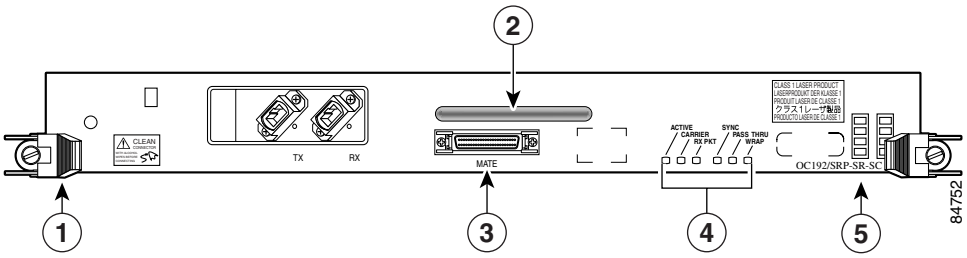

1	Ejector lever (one at each end)	**4**	Status LEDs
2	Handle	**5**	Alphanumeric LEDs
3	Mate cable connector	—	

Table 7 1-Port OC-48c/STM-16c DPT Line Card Optics and Connector Types

Line Card Optics	Connection Method	Connection Type
Short-reach (SR)	Single-mode duplex	SC connector
Long-reach (LR)	Single-mode duplex	SC connector

4-Port OC-48c/STM-16c DPT Line Card Product Overview

The 4-Port OC-48c/STM-16c DPT line card provides Cisco 12000 Series Internet Routers with four OC-48c/STM-16c, fiber-optic Lucent connector (LC) duplex ports, configured as two SRP nodes through the use of interchangeable small-form-factor pluggable modules (SFPs).

This line card is shown in Figure 4; an SFP module is shown in Figure 5. The available SFP modules are color-coded according to their optics type as specified in Table 8.

Figure 4 4-Port OC-48c/STM-16c DPT Line Card

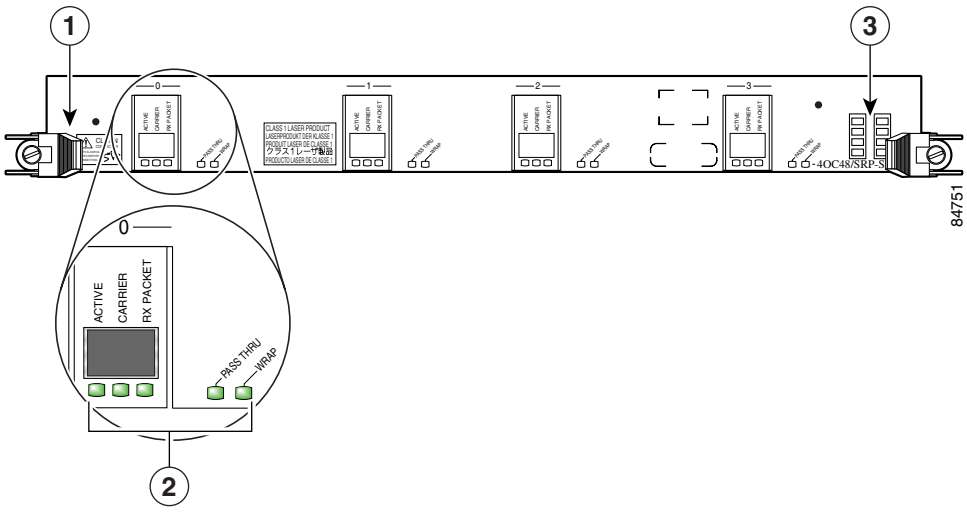

1	Ejector lever (one at each end)	**3**	Alphanumeric LEDs
2	Status LEDs	—	

Figure 5 SFP Module

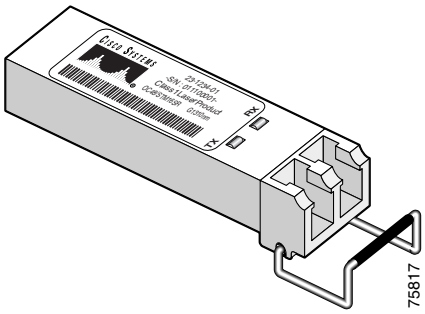

Table 8 SFP Module Product Numbers

Optics	Color-coding	Product Number
Short-reach	Gray	POM-OC48-SR-LC
Intermediate-reach	Yellow	POM-OC48-IR1-LC
Long-reach	White	POM-OC48-LR2-LC

1-Port OC-192c/STM-64c DPT Line Card Product Overview

The 1-Port OC-192c/STM-64c DPT line card provides supported Cisco 12000 Series Internet Routers with one OC-192c/STM-64c, fiber-optic duplex connection. It is available with very-short-, short-, and intermediate-reach optics.

Note To create an SRP node, you must install and mate two 1-Port OC-192c/STM-64c DPT line cards in a supported Cisco 12000 Series Router. When two 1-Port OC-192c/STM-64c DPT line cards are not mated, each 1-Port OC-192c/STM-64c DPT line card is the equivalent of a single-fiber SRP ring on side B. The single-fiber SRP ring has a wrap at each end to ensure that all data packets reach their destination.

This line card is shown in Figure 6; the optics and connector types for this line card are listed in Table 9.

Figure 6 1-Port OC-192c/STM-64c DPT Line Card

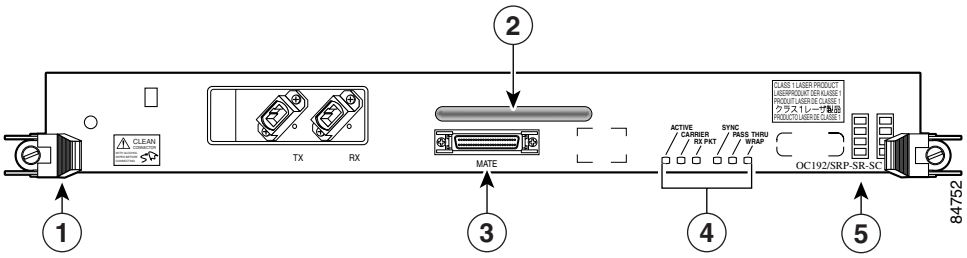

1	Ejector lever (one at each end)	**4**	Status LEDs
2	Handle	**5**	Alphanumeric LEDs
3	Mate cable connector	—	

Table 9 1-Port OC-192c/STM-64c DPT Line Card Optics and Connector Types

Line Card Optics	Connection Method	Connection Type
Very-short-reach (VSR)	Multimode duplex	MTP[1] connector
Short-reach (SR)	Single-mode duplex	SC connector
Intermediate-reach (IR)	Single-mode duplex	SC connector

1. MTP=Multiple Terminations Push-pull latch

Preparing for Installation

Installation preparation is presented in the following sections:

- Safety Guidelines
- Preventing Electrostatic Discharge
- Required Tools and Equipment

Safety Guidelines

Before you perform any procedure in this publication, review the safety guidelines in this section to avoid injuring yourself or damaging the equipment.

The following guidelines are for your safety and to protect equipment. The guidelines do not include all hazards. Be alert.

Note Review the safety warnings listed in the *Regulatory Compliance and Safety Information for Cisco 12000 Series Internet Router* publication (Document Number 78-4347-xx) that accompanied your router before installing, configuring, or maintaining a line card.

- Keep the work area clear and dust free during and after installation. Do not allow dirt or debris to enter into any laser-based components.
- Do not wear loose clothing, jewelry, or other items that could get caught in the router while working with line cards.
- Cisco equipment operates safely when it is used in accordance with its specifications and product usage instructions.

Preventing Electrostatic Discharge

Electrostatic discharge (ESD) damage, which can occur when electronic cards or components are improperly handled, results in complete or intermittent failures. Electromagnetic interference (EMI) shielding is an integral component of the line card. Cisco recommends using an ESD-preventive strap whenever you are handling network equipment or one of its components.

The following are guidelines for preventing ESD damage:

- Always use an ESD-preventive wrist or ankle strap and ensure that it makes good skin contact. Connect the equipment end of the connection cord to an ESD connection socket on the router or to bare metal on the chassis.
- Handle DPT line cards by the captive installation screws, the provided handle, ejector levers, or the line card metal carrier only; avoid touching the board or connector pins.
- Place removed DPT line cards board-side-up on an antistatic surface or in a static shielding bag. If you plan to return the component to the factory, immediately place it in a static shielding bag.
- Avoid contact between the DPT line cards and clothing. The wrist strap only protects the board from ESD voltages on the body; ESD voltages on clothing can still cause damage.

Warning **For safety, periodically check the resistance value of the ESD strap. The measurement should be between 1 and 10 megohms.**

Required Tools and Equipment

You need the following tools and parts to remove and install DPT line cards:

- Flat-blade or Phillips screwdriver
- ESD-preventive wrist or ankle strap and instructions
- Interface cables to connect the DPT line card with another router or switch

Note See the "Line Card Interface Cables" section on page 35 for information on interface cables.

Removing and Installing a Line Card

The following sections describe the procedures for removing and installing line cards:

- Guidelines for Line Card Removal and Installation
- Removing a Line Card
- Installing a Line Card
- Removing Mated DPT Line Cards
- Installing and Mating Two DPT Line Cards

Note Some of the procedures in the following sections use illustrations of a Cisco 12012 Router to support the descriptions of removing and installing line cards. Although the card cages of Cisco 12000 Series Internet Routers differ, the designated use of slots and the process of installing and removing a line card are basically the same. Therefore, separate procedures and illustrations are not included in this publication.

Guidelines for Line Card Removal and Installation

Guidelines for line card removal and installation include the following:

- Online insertion and removal (OIR) is supported, enabling you to remove and install line cards while the router is operating. OIR is seamless to users on the network, maintains all routing information, and ensures session preservation.

Note With OIR, notifying the software or resetting the power is not required. However, you have the option of using the **shutdown** command before removing a line card.

- After you reinstall a line card, the router automatically downloads the necessary software from the route processor (RP). Next, the router brings online only those interfaces that match the current configuration and were previously configured as *administratively up*. You must configure all others with the **configure** command.

Caution The router may indicate a hardware failure if you do not follow proper procedures. Remove or insert only one line card at a time. Allow at least 15 seconds for the router to complete the preceding tasks before removing or inserting another line card.

After removing and inserting a line card into the same slot, allow at least 60 seconds before removing or inserting another line card.

- Line cards have two ejector levers to release the card from its backplane connector. Use the levers when you are removing the line card and to seat the line card firmly in its backplane connector when you are installing the line card. The ejector levers align and seat the card connectors in the backplane.

Caution When you remove a line card, always use the ejector levers to ensure that the connector pins disconnect from the backplane in the sequence expected by the router. Any card that is only partially connected to the backplane can halt the router.

When you install a line card, always use the ejector levers to ensure that the card is correctly aligned with the backplane connector; the connector pins should make contact with the backplane in the correct order, indicating that the card is fully seated in the backplane. If a card is only partially seated in the backplane, the router will hang and subsequently crash.

Note When working with mated DPT line cards, Cisco recommends that you use the **shutdown** command before removing the line cards from the router.

For line card configuration information, see the "Configuring and Troubleshooting Interfaces" section on page 54.

Removing a Line Card

If you are replacing a failed line card, remove the existing line card first, then install the new line card in the same slot. To remove a line card, use Figure 7 as a reference and follow these steps:

Step 1 Attach an ESD-preventive wrist or ankle strap and follow its instructions for use.

Step 2 Disconnect and remove all interface cables from the ports; note the current connections of the cables to the ports on the line card.

Step 3 Detach the line card cable-management bracket from the line card.

Step 4 Use a screwdriver to loosen the captive screw at each end of the line card faceplate. (See Figure 7a.)

Figure 7 Line Card Removal and Installation

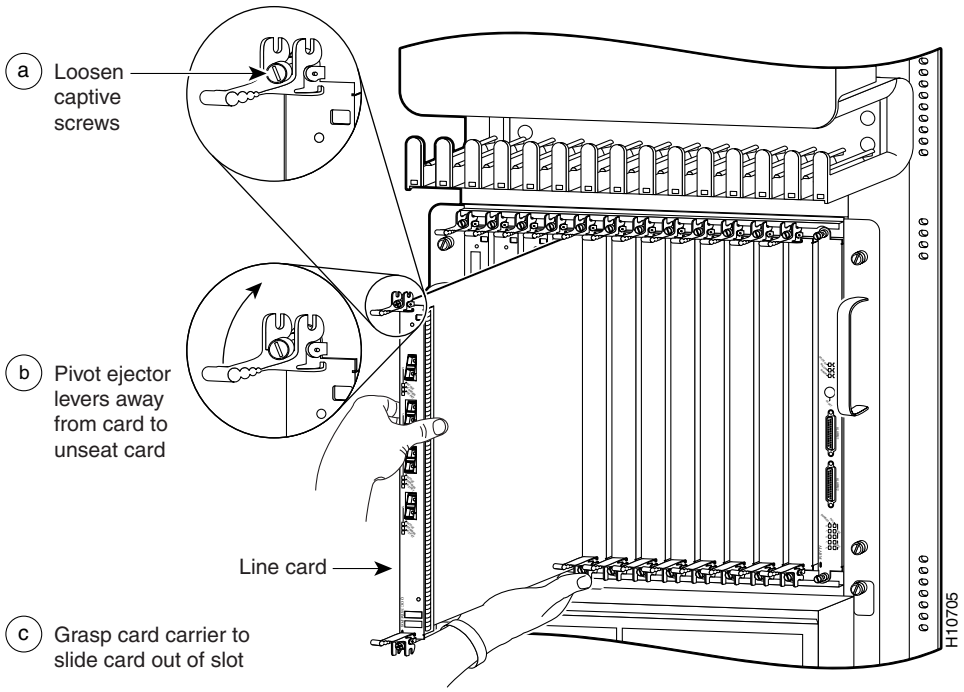

Caution When you remove a line card, always use the ejector levers to ensure that the line card connector pins disconnect from the backplane in the logical sequence expected by the router. Any line card that is only partially connected to the backplane can halt the router.

Step 5 Simultaneously pivot the ejector levers away from each other to release the line card from the backplane connector. (See Figure 7b.)

Step 6 Grasp the ejector levers and pull the line card halfway out of the slot.

Step 7 Grasp the line card and gently pull it straight out of the slot, keeping your other hand under the line card to guide it. (See Figure 7c.) Avoid touching the line card printed circuit board, components, or any connector pins.

Step 8 Place the removed line card on an antistatic mat, or immediately place it in an antistatic bag if you plan to return it to the factory.

Step 9 If the line card slot is to remain empty, install a line card blank (Product Number MAS-GSR-BLANK) to keep dust out of the chassis and to maintain proper airflow through the line card compartment. Secure the line card blank to the chassis by tightening its captive screws.

Note The following warning applies to removing very-short-reach (VSR) line cards.

Warning **Class 1M laser radiation when open. Do not view directly with optical instruments.**

Note For information on disconnecting interface cables, see the "Removing and Installing Interface Cables" section on page 37.

For information on removing the cable-management bracket, see the "Removing a Line Card Cable-Management Bracket" section on page 30.

Installing a Line Card

A line card slides into almost any available line card slot and connects directly to the backplane. If you install a new line card, you must first remove the line card blank from the available slot.

Note Refer to the installation and configuration guide for your router for information on line card slot types, slot width, and slot location.

Note In Cisco 12008 and Cisco 12012 Routers, the <wide line card> uses a pair of line card slots. You must install the blank filler into the rightmost slot of the pair before you can install the <wide line card>.

Caution The router may indicate a hardware failure if you do not follow proper procedures. Remove or insert only one line card at a time. Allow at least 15 seconds for the router to complete the preceding tasks before removing or inserting another line card.

To install a line card, follow these steps:

Step 1 Attach an ESD-preventive wrist or ankle strap and follow its instructions for use.

Step 2 Choose an available line card slot for the line card, and verify that the line card interface cable is long enough for you to connect the line card with any external equipment.

Note If you are installing a <wide line card> into a Cisco 12008 or Cisco 12012 Router, you must install the line card into the slot to the left of the blank filler.

Caution To prevent ESD damage, handle line cards by the captive installation screws, the provided handle, ejector levers, or the card carrier edges only. Do not touch any of the electrical components or circuitry.

Step 3 Grasp the faceplate (or handle) of the line card with one hand and place your other hand under the card carrier to support the weight of the card; position the card for insertion into the card cage slot. Avoid touching the line card printed circuit board, components, or any connector pins.

Step 4 Carefully slide the line card into the slot until the ejector levers make contact with the edges of the card cage, then *stop* when the ejector lever hooks catch the lip of the card cage. If they do not catch, try reinserting the line card until the ejector lever hooks are fully latched. (See Figure 8.)

Figure 8 Ejector Levers

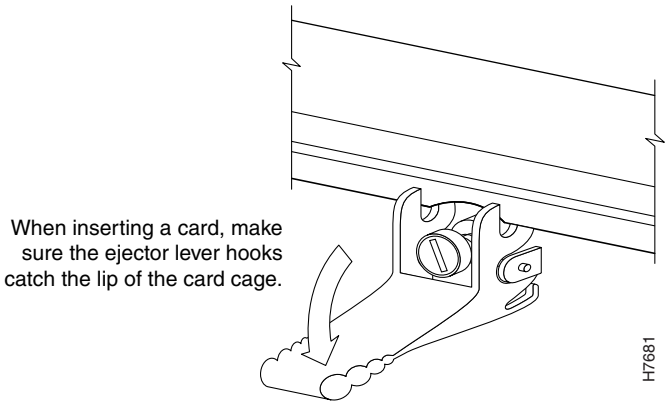

Caution When you install a line card, always use the ejector levers to ensure that the card is correctly aligned with the backplane connector, the card connector pins make contact with the backplane in the correct order, and the card is fully seated in the backplane. A card that is only partially seated in the backplane can cause the router to hang and subsequently crash.

Step 5 Simultaneously pivot both ejector levers toward each other until they are perpendicular to the line card faceplate. This action firmly seats the card in the backplane.

Step 6 Use a 3/16-inch flat-blade screwdriver to tighten the captive screw on each end of the line card faceplate to ensure proper EMI shielding and to prevent the line card from becoming partially dislodged from the backplane.

Caution To ensure adequate space for additional line cards, always tighten the captive installation screws on each newly installed line card *before* you insert any additional line cards. These screws also prevent accidental removal and provide proper grounding and EMI shielding for the router.

Step 7 Install the cable-management bracket.

Step 8 Install GBIC or SFP modules, and EPA daughter cards, in the line cards that use them.

Step 9 Install the interface cables.

Note For information on installing cable-management brackets, see the "Installing a Line Card Cable-Management Bracket" section on page 33.

For information on installing SFP modules, see the "Removing and Installing SFP Modules" section on page 18.

For information on installing interface cables, see the "Removing and Installing Interface Cables" section on page 37.

Exchanging Only One Line Card of a Pair of Mated DPT Line Cards

Note This section only applies to the 1-Port OC-48c/STM-16c and the 1-Port OC-192c/STM-64c DPT line cards.

The DPT line card in the lower-numbered slot is referred to as the first card in the pair and is represents side A of the DPT node. The second DPT line card in the higher-numbered slot is represents side B of the DPT node.

To remove only one DPT line card from a pair of mated DPT line cards connected with a mate cable, follow these steps:

Step 1 Attach an ESD-preventive wrist strap and follow its instructions for use.

Step 2 Remove the fiber cables from the transmit(TX) and receive(RX) ports before removing the mate cable.

Step 3 Use the **hw-module slot** *number* **shutdown** configuration command in Global Configuration mode to shut down the line card to be removed.

Step 4 Remove the mate cable completely from the line card to be removed. See the "Removing and Installing the Mate Cable" section on page 41.

Step 5 Remove the DPT line card following the steps in the "Removing a Line Card" section on page 12.

Step 6 Review the steps in the "Installing a Line Card" section on page 14 for general line card installation information.

Step 7 Insert the new line card into the slot where the line card was removed.

Step 8 Connect the mate cable to new line card. See the "Removing and Installing the Mate Cable" section on page 41.

Step 9 Use the **no hw-module slot** *number* **shutdown** configuration command in Global configuration mode to activate the newly-added line card.

Step 10 Use the **hw-module slot** *number* **srp** configuration command to enable the SRP interface, where *number* is the leftmost (or topmost if horizontal) slot of the pair of slots occupied by the two line cards. This command prevents any anomalies to the running configuration if you mistakenly install a DPT line card into the second slot first.

Step 11 Connect the fiber cables to the transmit(TX) and receive(RX) ports of the newly-added line card.

Removing Mated DPT Line Cards

Note This section only applies to the 1-Port OC-48c/STM-16c and the 1-Port OC-192c/STM-64c DPT line cards.

Caution Be aware that if you remove both (previously mated) DPT line cards from a router, you are removing the router from the SRP ring. When you insert new DPT line cards, you will have to reconnect the nodes on the SRP ring.

Note Cisco strongly recommends that you use the **shutdown** command prior to removing mated 1-Port OC-48c/STM-16c or mated 1-Port OC-192c/STM-64c DPT line cards to prevent anomalies when you reinstall two new or reconfigured DPT line cards. When you shut down an SRP interface, it is designated as *administratively down* in the **show** command display.

To remove two DPT line cards connected with a mate cable, follow these steps:

Step 1 Attach an ESD-preventive wrist strap and follow its instructions for use.

Step 2 Remove the fiber cables from the transmit (TX) and receive (RX) ports before removing the mate cable.

Step 3 Remove the mate cable completely from both line cards. See the "Removing and Installing the Mate Cable" section on page 41.

Step 4 Remove each DPT line card following the steps in the "Removing a Line Card" section on page 12.

Note When you remove both sides of the mate cable, the line card automatically enters wrap mode on the remaining line card and creates half of an SRP ring. (See Figure 34 on page 44.)

Installing and Mating Two DPT Line Cards

Note This section only applies to the 1-Port OC-48c/STM-16c and the 1-Port OC-192c/STM-64c DPT line cards.

You can install two DPT line cards in any two adjacent line card slots not occupied by other system cards such as the RP. If you install a new line card, you must first remove the line card blank from the available slot. See the procedures in the "Removing a Line Card" section on page 12.

When you first install a pair of DPT line cards, ensure that the first DPT line card is inserted into the lower (or topmost) slot number first. The DPT line card in the lower-numbered slot is referred to as the first card in the pair and is represents side A of the DPT node. The second DPT line card in the higher-numbered slot is represents side B of the DPT node.

For example, assume that a pair of 1-Port OC-48c/STM-16c DPT line cards are present in slots 4 and 5. The line card in slot 4 is the first card of the pair of 1-Port OC-48c/STM-16c DPT line cards (side A), and the line card in slot 5 is the second card (side B).

When two DPT line cards are connected by a mate cable, they behave as one interface, share one IP address, and are referenced via the line card in the first slot. You must enter the **hw-module slot** *number* **srp** configuration command on the first line card to enable the paired line cards.

Caution The system can indicate a hardware failure if you do not follow proper procedures. Remove or insert only one line card at a time. Allow at least 15 seconds for the system to complete the preceding tasks before removing or inserting another line card.

Follow these steps to install two 1-port DPT line cards into adjacent slots in a Cisco 12000 Series Internet Router:

Step 1 Attach an ESD-preventive wrist strap and follow its instructions for use.

Step 2 Review the steps in the "Installing a Line Card" section on page 14 for general line card installation information.

Step 3 Insert the first line card into the leftmost (or topmost if horizontal) slot. There is a slight delay while the line card initializes.

Step 4 Insert the second line card into the adjacent slot. There is a slight delay while the line card initializes.

Step 5 Connect the mate cable to each DPT line card. See the "Removing and Installing the Mate Cable" section on page 41.

Step 6 Use the **hw-module slot** *number* **srp** configuration command to enable the SRP interface, where *number* is the leftmost (or topmost if horizontal) slot of the pair of slots occupied by the two line cards. This command prevents any anomalies to the running configuration if you mistakenly install a DPT line card into the second slot first.

Caution To ensure adequate space for additional line cards, always tighten the captive installation screws on each newly installed line card *before* you insert any additional line cards. These screws also prevent accidental removal and provide proper grounding and EMI shielding for the system.

Step 7 Install the line card cable-management bracket. See the "Installing a Line Card Cable-Management Bracket" section on page 33.

Step 8 Install the interface cables. See the "Removing and Installing Interface Cables" section on page 37.

Removing and Installing SFP Modules

Before you remove or install an SFP module, read the installation information in this section. Before servicing an SFP module, see the " Laser Safety" section on page 83.

DPT line cards use various optics and connectors. See the "Cabling and Specifications" section on page 33 for optics and cabling specifications.

Before removing SFP modules, you must first disconnect any connected interface cables. See the "Removing and Installing Interface Cables" section on page 37.

Caution Protect the SFP modules by inserting clean dust covers into them after the cables are removed from them. Be sure to clean the optic surfaces of the fiber cables before you plug them back into the optical ports of another SFP module. Avoid getting dust and other contaminants into the optical ports of your SFP modules: The optics will not work correctly when obstructed with dust.

Note Only the 4-Port OC-48c/STM-16c line card uses SFP modules.

SFP modules use one of four different latching devices to install and remove the module from a port. The four types of SFP module latching devices are described in the following sections:

- Bale Clasp SFP Module
- Mylar Tab SFP Module
- Actuator Button SFP Module
- Slide Tab SFP Module

Bale Clasp SFP Module

The bale clasp SFP module has a clasp that you use to remove or install the SFP module. (See Figure 9.)

Figure 9 Bale Clasp SFP Module

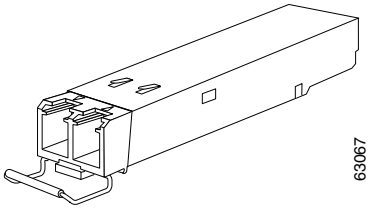

Removing a Bale Clasp SFP Module

To remove this type of SFP module, follow these steps:

Step 1 Attach an ESD-preventive wrist or ankle strap and follow its instructions for use.

Step 2 Disconnect and remove all interface cables from the ports; note the current connections of the cables to the ports on the line card.

Step 3 Open the bale clasp on the SFP module with your index finger in a downward direction, as shown in Figure 10. If the bale clasp is obstructed and you cannot use your index finger to open it, use a small flat-blade screwdriver or other long, narrow instrument to open the bale clasp.

Step 4 Grasp the SFP module between your thumb and index finger and carefully remove it from the port, as shown in Figure 10.

Figure 10 Removing a Bale Clasp SFP Module

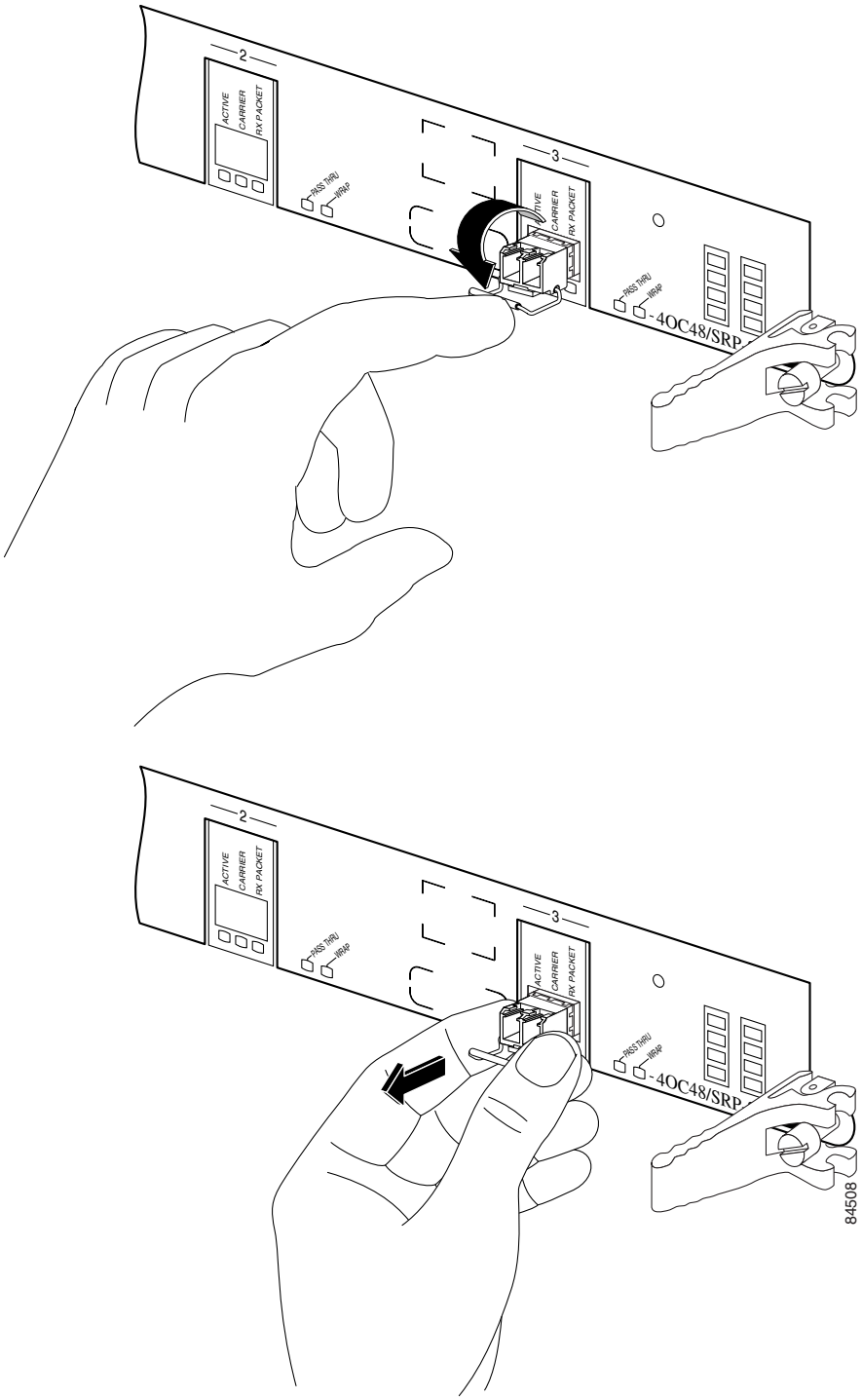

Step 5 Place the removed SFP module on an antistatic mat, or immediately place it in a static shielding bag if you plan to return it to the factory.

Step 6 Protect your line card by inserting clean SFP module cage covers into the optical module cage when there is no SFP module installed.

Installing a Bale Clasp SFP Module

To install this type of SFP module, follow these steps:

Step 1 Attach an ESD-preventive wrist or ankle strap and follow its instructions for use.

Step 2 Close the bale clasp before inserting the SFP module.

Step 3 Line up the SFP module with the port and slide it into the port. (See Figure 11.)

Figure 11 Installing a Bale Clasp SFP Module into a Port

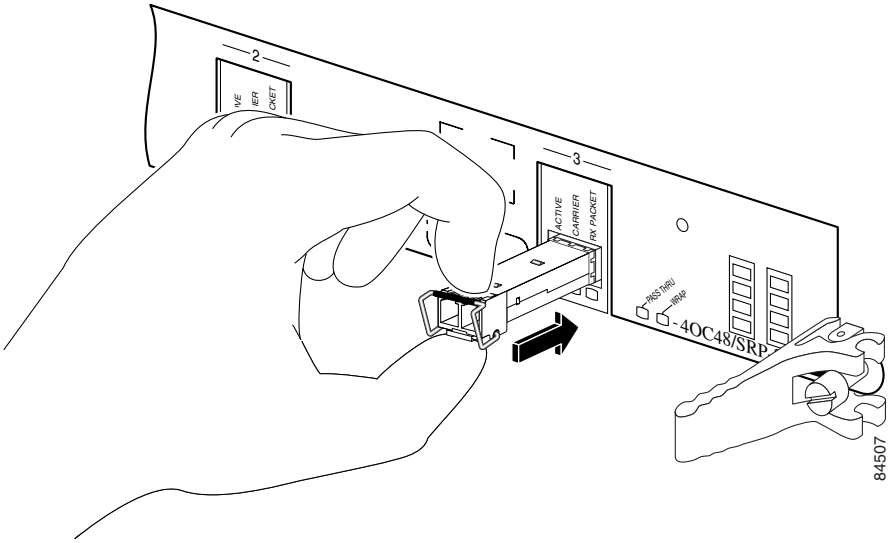

Mylar Tab SFP Module

The mylar tab SFP module has a tab that you pull to remove the module from a port. (See Figure 12.)

Figure 12 Mylar Tab SFP Module

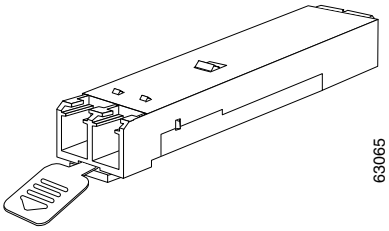

Removing a Mylar Tab SFP Module

To remove this type of SFP module, follow these steps:

Step 1 Attach an ESD-preventive wrist or ankle strap and follow its instructions for use.

Step 2 Disconnect and remove all interface cables from the ports; note the current connections of the cables to the ports on the line card.

Step 3 Pull the tab gently in a slightly downward direction until it disengages from the port, then pull the SFP module out. (See Figure 13.)

Figure 13 Removing a Mylar Tab SFP Module

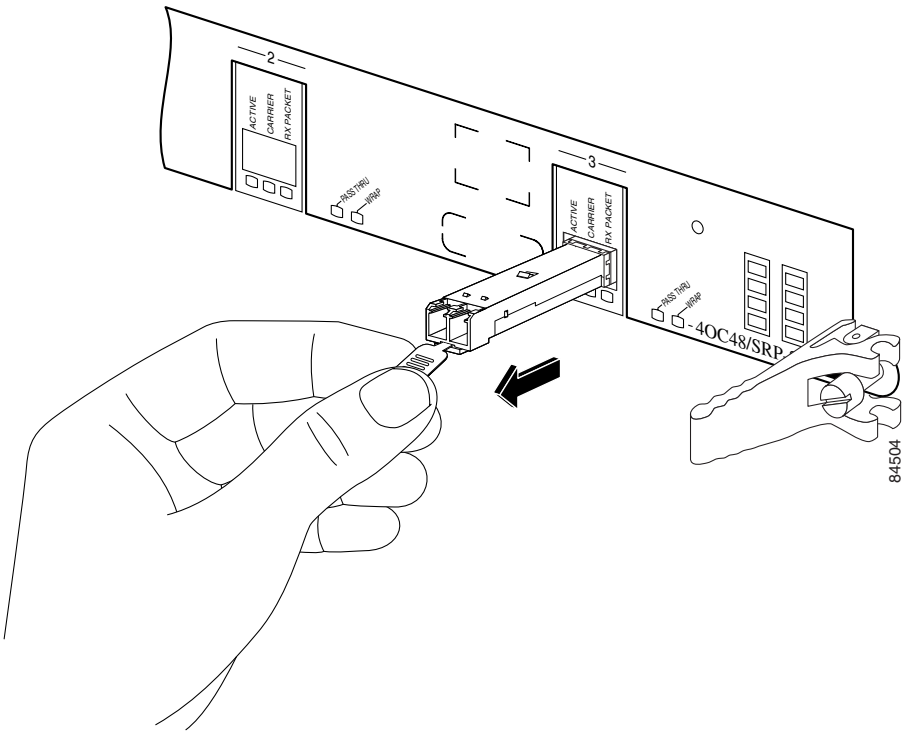

Step 4 Place the removed SFP module on an antistatic mat, or immediately place it in a static shielding bag if you plan to return it to the factory.

Step 5 Protect your line card by inserting clean SFP module cage covers into the optical module cage when there is no SFP module installed.

Caution When pulling the tab to remove the SFP module, be sure to pull in a straight outward motion so you remove the SFP module from the port in a parallel direction. Do not twist or pull the tab, because you might disconnect it from the SFP module.

Installing a Mylar Tab SFP Module

To install this type of SFP module, follow these steps:

Step 1 Attach an ESD-preventive wrist or ankle strap and follow its instructions for use.

Step 2 Line up the SFP module with the port, and slide it into place. (See Figure 14.)

Figure 14 Installing a Mylar Tab SFP Module

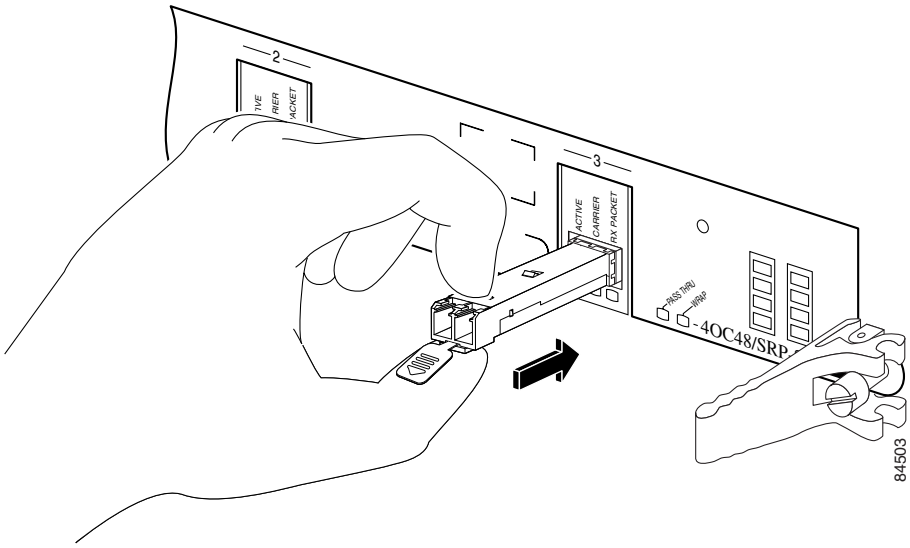

Actuator Button SFP Module

The actuator button SFP module includes a button that you push in order to remove the SFP module from a port. (See Figure 15.)

Figure 15 Actuator Button SFP Module

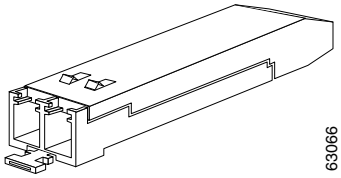

Removing an Actuator Button SFP Module

To remove this type of SFP module, follow these steps:

Step 1 Attach an ESD-preventive wrist or ankle strap and follow its instructions for use.

Step 2 Disconnect and remove all interface cables from the ports; note the current connections of the cables to the ports on the line card.

Step 3 Gently press the actuator button on the front of the SFP module until it clicks and the latch mechanism activates, releasing the SFP module from the port. (See Figure 16.)

Figure 16 Removing an Actuator Button SFP Module from a Port

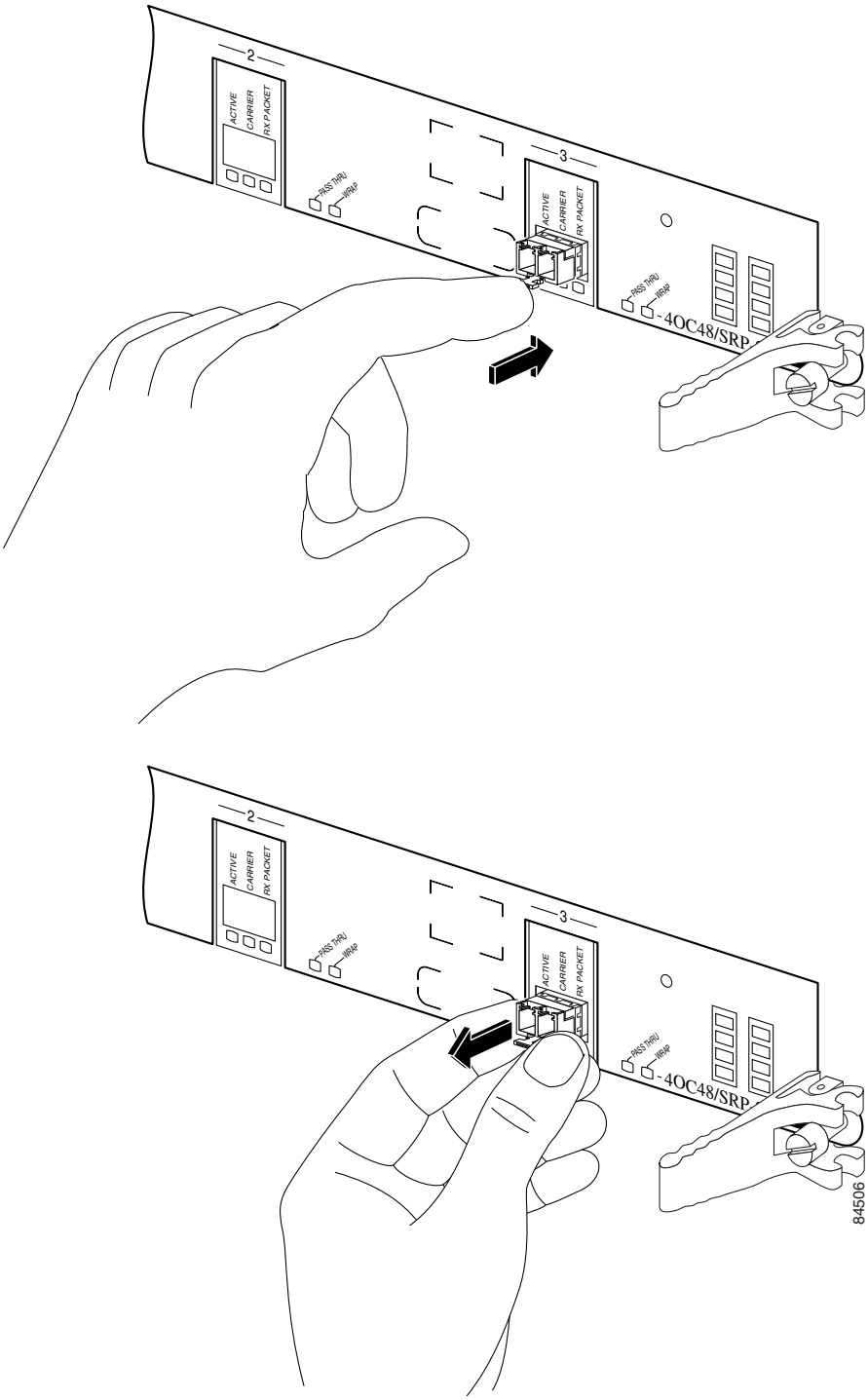

Step 4 Grasp the actuator button between your thumb and index finger and carefully pull the SFP module from the port.

Step 5 Place the removed SFP module on an antistatic mat, or immediately place it in a static shielding bag if you plan to return it to the factory.

Step 6 Protect your line card by inserting clean SFP module cage covers into the optical module cage when there is no SFP module installed.

Installing an Actuator Button SFP Module

To install this type of SFP module, follow these steps:

Step 1 Attach an ESD-preventive wrist or ankle strap and follow its instructions for use.

Step 2 Line up the SFP module with the port and slide it in until the actuator button clicks into place. (See Figure 17.) Be sure not to press the actuator button as you insert the SFP module because you might inadvertently disengage the SFP module from the port.

Figure 17 Installing an Actuator Button SFP Module

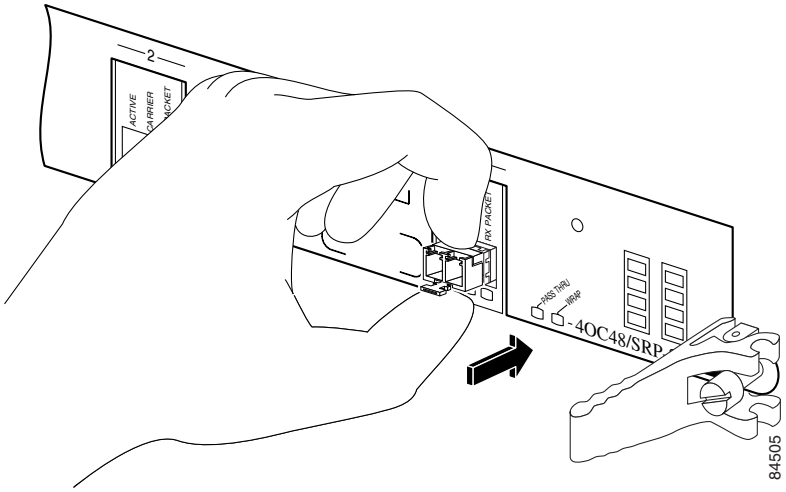

Slide Tab SFP Module

The slide tab SFP module has a tab underneath the front of the SFP module that you use to disengage the module from a port. (See Figure 18.)

Figure 18 Slide Tab SFP Module

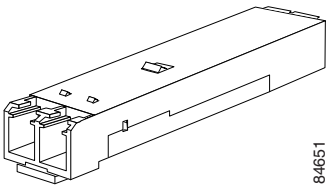

Removing a Slide Tab SFP Module

To remove this type of SFP module, follow these steps:

Step 1 Attach an ESD-preventive wrist or ankle strap and follow its instructions for use.

Step 2 Disconnect and remove all interface cables from the ports; note the current connections of the cables to the ports on the line card.

Step 3 Grasp the SFP module between your thumb and index finger.

Step 4 With your thumb, push the slide tab on the bottom front of the SFP module in the direction of the line card to disengage the module from the line card port. (See Figure 19.)

Figure 19 Disengaging the Slide Tab

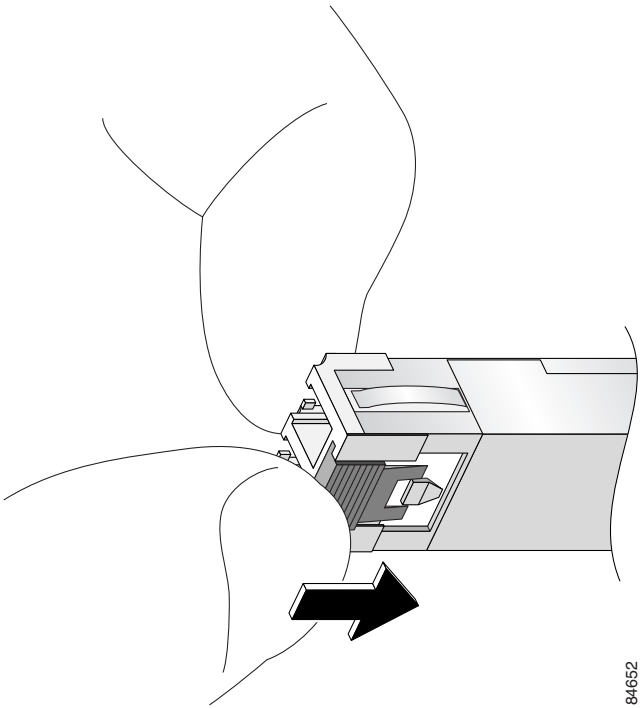

Step 5 With the tab still pushed, carefully pull the SFP module from the port as shown in Figure 20.

Caution You must disengage the SFP module by pushing on the slide tab before you can pull out the SFP module. If you pull on the SFP module without disengaging the tab, you can damage the SFP module.

Figure 20 Removing a Slide Tab SFP Module

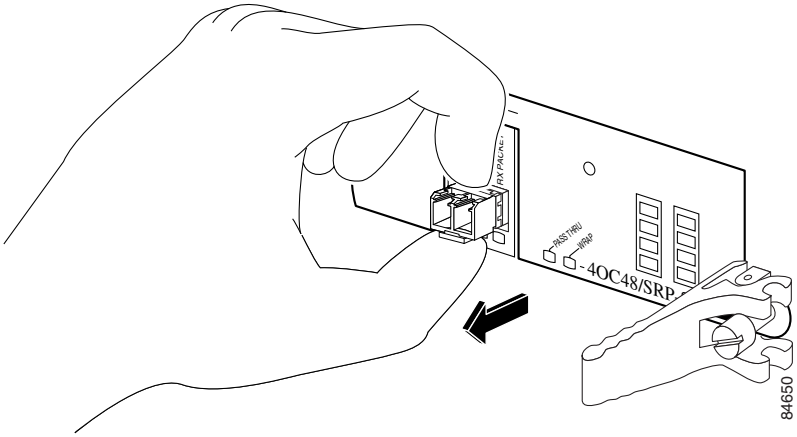

Step 6 Place the removed SFP module on an antistatic mat, or immediately place it in a static shielding bag if you plan to return it to the factory.

Step 7 Protect your line card by inserting clean SFP module cage covers into the optical module cage when there is no SFP module installed.

Installing a Slide Tab SFP Module

To install this type of SFP module into a line card, follow these steps:

Step 1 Attach an ESD-preventive wrist or ankle strap and follow its instructions for use.

Step 2 Hold the SFP module with the hardware label facing up.

Caution The SFP module must be inserted with the hardware label facing up to avoiding damaging the module or the line card.

Step 3 Insert the SFP module into the appropriate slot and gently push on it until it snaps into the slot tightly. (See Figure 21.)

Figure 21 Installing a Slide Tab SFP Module

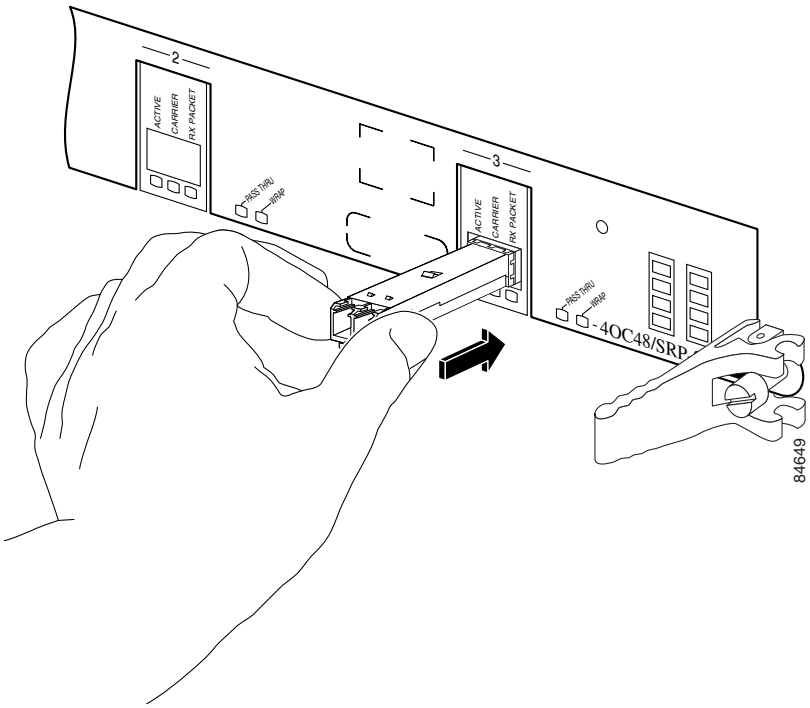

Line Card Cable-Management Bracket

Cisco 12000 Series Internet Routers include a cable-management system that organizes the interface cables entering and exiting the router, keeping them out of the way and free of sharp bends.

Caution Excessive bending of interface cables can cause damage to the cables.

The cable-management system consists of two separate components:

1. A cable-management tray that is mounted on the chassis. Refer to the appropriate Cisco 12000 Series Internet Router installation and configuration guide for more information on the cable-management tray.
2. A cable-management bracket that attaches to a line card.

This section describes the line card cable-management bracket. Figure 22 shows the single-port line card cable-management bracket; Figure 23 shows the multiport line card cable-management bracket.

Figure 22 Single-Port Line Card Cable-Management Bracket

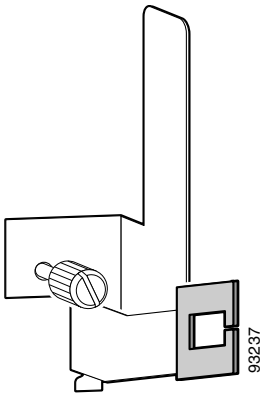

Figure 23 Multiport Line Card Cable-Management Bracket

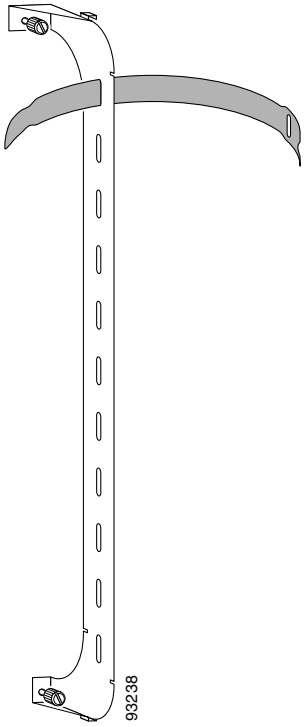

Note When shipped with spare line card orders, the cable-management bracket is not attached to the line card. You must attach the cable-management bracket to the line card before you insert the line card into the router.

Caution Do not use the cable-management bracket as a handle to pull out or push in the line card. The cable-management bracket is designed to hold the interface cables and may break if you use the bracket to push, pull, or carry the line card after it is removed from the router.

Removing and installing the line card cable-management bracket is described in the following procedures:

- Removing a Line Card Cable-Management Bracket
- Installing a Line Card Cable-Management Bracket

Removing a Line Card Cable-Management Bracket

To remove a line card cable-management bracket, follow these steps:

Step 1 Attach an ESD-preventive wrist strap and follow its instructions for use.

Step 2 Note the current interface cable connections to the ports on each line card.

Step 3 Starting with the interface cable for the bottom port on the line card, disconnect the cable from the line card interface.

Note It is not necessary to remove the interface cables from the line card cable-management bracket. The bracket (with attached cables) can be hooked to the cable-management tray or a bracket on the chassis until a new line card is installed.

Step 4 For multiport line card cable-management brackets, proceed upward and remove the interface from the Velcro strap on the end of the cable standoff. (See Figure 24.)
For single-port line card cable-management brackets, carefully remove the interface cable from the cable clip. (See Figure 25.) Avoid any kinks or sharp bends in the cable.

Figure 24 Multiport Line Card Cable-Mangement Installation and Removal (4-Port OC-48c/STM-16c DPT Line Card Shown)

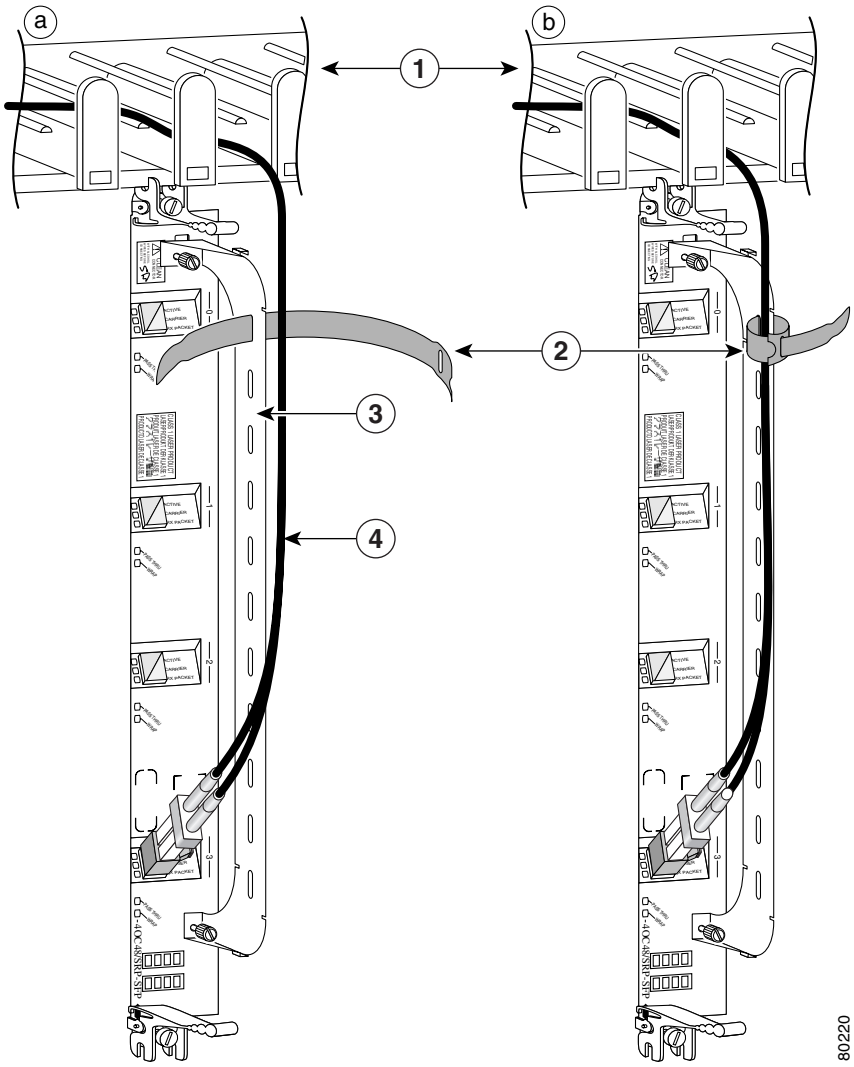

1	Chassis cable-management tray	**3**	Line card cable-management bracket
2	Velcro straps	**4**	Fiber cable

Figure 25 Single-Port Line Card Cable-Management Bracket Installation and Removal (1-Port OC-192c/STM-64c DPT Line Card Shown)

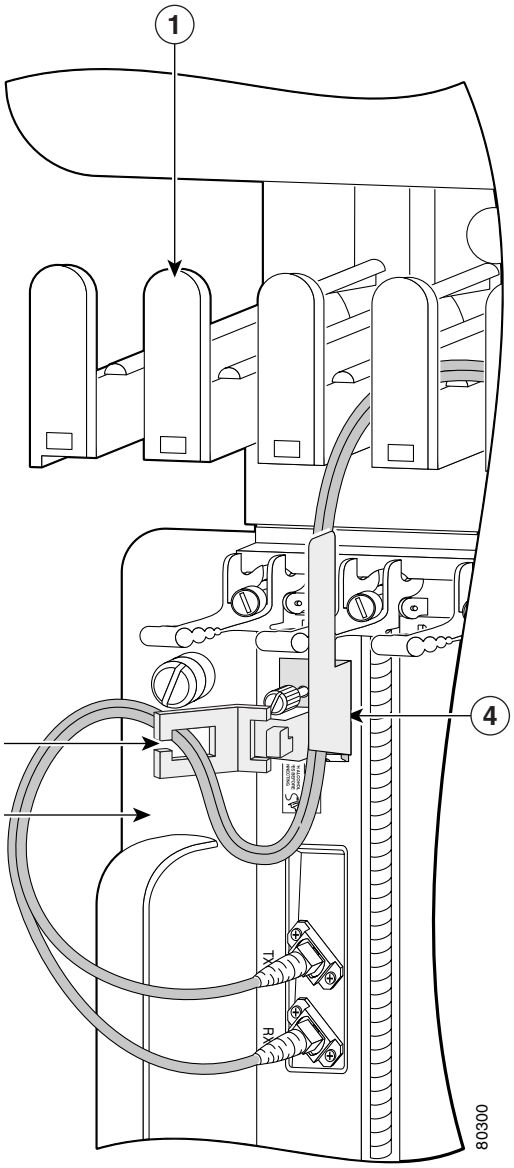

1	Chassis cable-management tray	**3**	Interface cable
2	Cable clip	**4**	Line card cable-management bracket

Step 5 Repeat Step 3 and Step 4 for all remaining interface cables, then proceed to Step 6

Step 6 For multiport line card cable-management brackets, loosen the captive installation screw at each end of the cable-management bracket and remove the bracket from the line card.
For single-port line card cable-management brackets, loose the captive installation screw on the cable-management bracket and remove the bracket from the line card.

Installing a Line Card Cable-Management Bracket

To install a line card cable-management bracket, follow these steps:

Step 1 Attach an ESD-preventive wrist strap and follow its instructions for use.

Step 2 Attach the line card cable-management bracket to the line card as follows:

a. Position the cable-management bracket over the front of the line card faceplate.

b. Insert and tighten the captive screw(s) to secure the bracket to the line card.

c. Starting with the bottom port on the line card, connect each interface cable to the intended port.

Step 3 For multiport line card cable-management brackets, carefully wrap the cables with the supplied Velcro strap. (See Figure 24.) For single-port line card cable-management brackets, carefully press the interface cable onto the cable clip. (See Figure 25.) Avoid any kinks or sharp bends in the cable.

Note For information on disconnecting and connecting interface cables, see the "Removing and Installing Interface Cables" section on page 37.

Cabling and Specifications

The following sections provide specifications for DPT line cards:

- Power Budget and Signal Specifications
- Line Card Interface Cables

Power Budget and Signal Specifications

The SONET specification for fiber-optic transmission defines two types of fiber: single-mode and multimode. Signals can travel farther through single-mode fiber than through multimode fiber.

The maximum distance for installations is determined by the amount of light loss in the fiber path. If your environment requires the signal to travel close to the typical maximum distance (see Table 14 on page 35), you should use an optical time domain reflectometer (OTDR) to measure the power loss. All DPT line cards meet both the EN60825\IEC60825 and FDA - Code of Federal Regulations (USA) laser safety standards.

The following sections describe the power budget and signal specifications for the optics used in each DPT line card:

- 1-Port OC-12c/STM-4c DPT Line Card Power Specifications
- 4-Port OC-12c/STM-4c ISE DPT Line Card Power Specifications
- 1-Port OC-48c/STM-16c DPT Line Card Power Specifications
- 4-Port OC-48c/STM-16c DPT Line Card Power Specifications
- 1-Port OC-192c/STM-64c DPT Line Card Power Specifications

1-Port OC-12c/STM-4c DPT Line Card Power Specifications

The 1-Port OC-12c/STM-4c DPT line card provides one full-duplex, 622-Mbps, laser-based, SONET/SDH-compliant interface. Table 10 lists the power ratings and distances of each 1-Port OC-12c/STM-4c DPT line card. The actual distance in any given case depends on the quality of the fiber attached to the transceiver.

Table 10 1-Port OC-12c/STM-4c DPT Line Card Power Specifications

Transceiver	Attenuation	Transmit Power	Receive Power	Typical Maximum Distance
Multimode[1], 1310nm	0 to 6 dB	–20 to –14 dBm	–26 to –14 dBm	1640 feet (500 m)
Single-mode, intermediate-reach, 1310 nm	0 to 12 dB	–15 to –8 dBm	–28 to –8 dBm	13 miles (21 km)
Single-mode, long-reach, 1310 nm	10 to 24 dB	–3 to +2 dBm	–28 to –8 dBm	26 miles (42 km)
Single-mode, extended-reach, 1550 nm	10 to 24 dB	–3 to +2 dBm	–28 to –8 dBm	50 miles (80 km)

1. Runs on multimode fiber only

4-Port OC-12c/STM-4c ISE DPT Line Card Power Specifications

The 4-Port OC-12c/STM-4c ISE DPT line card provides four full-duplex, 622-Mbps, laser-based, SONET/SDH-compliant interfaces. Table 11 lists the power ratings and distances of each 4-Port OC-12c/STM-4c ISE DPT line card. The actual distance in any given case depends on the quality of the fiber attached to the transceiver.

Table 11 4-Port OC-12c/STM-4c ISE DPT Line Card Power Specifications

Transceiver	Attenuation	Transmit Power	Receive Power	Typical Maximum Distance
Single-mode, intermediate-reach, 1310 nm	0 to 12 dB	–15 to –8 dBm	–28 to –8 dBm	13 miles (21 km)
Single-mode, very-long-reach, 1550 nm	10 to 24 dB	–3 to +2 dBm	–28 to –8 dBm	52.8 miles (85 km)

1-Port OC-48c/STM-16c DPT Line Card Power Specifications

The 1-Port OC-48c/STM-16c DPT line card provides a full-duplex, 10-Gbps, laser-based, SONET/SDH-compliant interface. Table 12 lists the power budget and signal specifications of each 1-Port OC-48c/STM-16c DPT line card. The actual distance in any given case depends on the quality of the fiber attached to the transceiver.

Table 12 1-Port OC-48c/STM-16c DPT Line Card Power Specifications

Transceiver	Attenuation	Transmit Power	Receive Power	Typical Maximum Distance
Single-mode, short-reach, 1310 nm	0 to 7 dB	–10 to –3 dBm	–18 to -3 dBm	7.5 miles (12 km)
Single-mode, long-reach, 1550 nm	10-24 dB	–2 to +3 dBm	–28 to –9 dBm	52.8 miles (85 km)

4-Port OC-48c/STM-16c DPT Line Card Power Specifications

The 4-Port OC-48c/STM-16c DPT line card uses SFP modules that support single-mode operation only. All SFP modules provide a full-duplex, 10-Gbps, laser-based SONET/SDH-compliant interface. Table 13 lists the power ratings and distances of each SFP module. The actual distance in any given case depends on the quality of the fiber attached to the transceiver.

Table 13 SFP Module Power Specifications

SFP	Attenuation	Transmit Power	Receive Power	Typical Maximum Distance
Short-reach, 1310 nm	0 to 7 dB	–10 to –3 dBm	–18 to –3 dBm	7.5 miles (12 km)
Intermediate-reach, 1310 nm	0 to 12 dB	–5 to 0 dBm	–18 to 0 dBm	13 miles (21 km)
Long-reach, 1550 nm	10 to 24 dB	–2 to +3 dBm	–28 to –9 dBm	52.8 miles (85 km)

Note Only use SFP modules supplied by Cisco. Each SFP contains an internal serial number that is security-programmed by the SFP manufacturer with information that provides a way for Cisco (through the Cisco IOS software) to identify and validate the SFP as a module type that is qualified by Cisco to operate with 4-Port OC-48c/STM-16c DPT line cards. Unapproved SFP modules (those not purchased directly from Cisco) will not work.

1-Port OC-192c/STM-64c DPT Line Card Power Specifications

The 1-Port OC-192c/STM-64c DPT line card provides a full-duplex, 10-Gbps, laser-based, SONET/SDH-compliant interface. Table 14 lists the power budget and signal specifications of each 1-Port OC-192c/STM-64c DPT line card. The actual distance in any given case depends on the quality of the fiber attached to the transceiver.

Table 14 1-Port OC-192c/STM-64c DPT Line Card Power Specifications

Transceiver	Attenuation	Transmit Power	Receive Power	Typical Maximum Distance
Multimode[1], very-short-reach, 850 nm	6 dB	–10 to –3 dBm	–16 to –3 dBm	0.1 mile (300 m)
Single-mode, short-reach, 1310 nm	0 to 4 dB	–6 to –1 dBm	–11 to –1 dBm	4.3 miles (7 km)
Single-mode, intermediate-reach, 1550 nm	3 to 11 dB	–1 to +2 dBm	–14 to –1 dBm	24.8 miles (40 km)

1. Runs on multimode fiber only

Line Card Interface Cables

The following types of cables are used with DPT line cards to connect your router to another router or switch:

- Single-mode—Generally yellow in color
- Multimode—Generally gray or orange in color. Multimode cables are also multifiber cables that carry 12 channels of fiber data.

Note Fiber cables are not available from Cisco Systems. They can be purchased from cable vendors. The plug on the cable may be supplied with a dust cover. If it is, remove it before trying to connect it to the line card port.

The following types of cable connectors are used with DPT line cards:

- Subscriber connector (SC)—See Figure 26
- Lucent connector (LC)— See Figure 27
- Multiple terminations push-pull latch (MTP)—See Figure 28

Figure 26 Simplex SC Cable Connector (Single-mode)

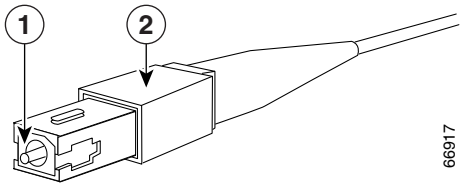

1	SC cable connector	**2**	Spring-action disconnect latch

Figure 27 Simplex LC Cable Connector

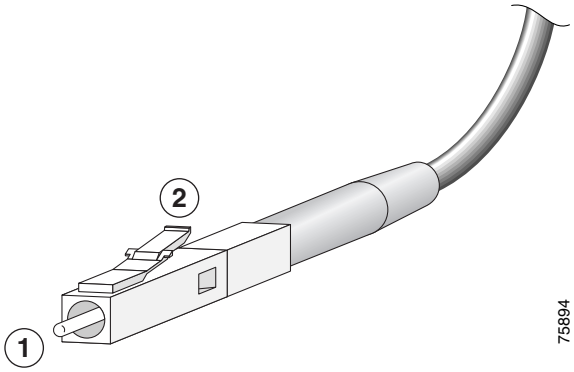

1	LC connector	**2**	Spring-action disconnect latch

Figure 28 **Simplex MTP Cable Connector (Multimode - VSR Only)**

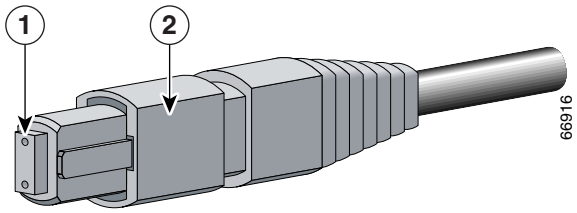

1	MTP female connector	**2**	Spring-action disconnect latch

Attach one simplex fiber cable between the line card and the device to which the line card is connected. Observe the receive (RX) and transmit (TX) cable relationship shown in Figure 29.

Note Duplex fiber cables are also supported.

Table 15 lists the cable and connector types for all DPT line cards.

Table 15 DPT Line Card Cable and Connector Types

DPT Line Card	Cable Type	Connector Type
1-Port OC-12c/STM-4c multimode	Multimode	SC
1-Port OC-12c/STM-4c intermediate-reach	Single-mode	SC
1-Port OC-12c/STM-4c long-reach	Single-mode	SC
1-Port OC-12c/STM-4c extended-reach	Single-mode	SC
4-Port OC-12c/STM-4c extended-reach	Single-mode	LC
4-Port OC-12c/STM-4c intermediate-reach	Single-mode	LC
1-Port OC-48c/STM-16c short-reach	Single-mode	SC
1-Port OC-48c/STM-16c long-reach	Single-mode	SC
4-Port OC-48c/STM-16c SFP modules	Single-mode	LC
1-Port OC-192c/STM-64c very-short-reach	Multimode	MTP
1-Port OC-192c/STM-64c short-reach	Single-mode	SC
1-Port OC-192c/STM-64c intermediate-reach	Single-mode	SC

Removing and Installing Interface Cables

To remove an interface cable, follow these steps:

Step 1 Attach an ESD-preventive wrist strap to your wrist and follow its instructions for use.

Step 2 Press on the spring-action disconnect latch to disconnect the cable from the interface ports. (See Figure 26, Figure 28, or Figure 27.)

Step 3 Slowly pull the connector from the port.

Warning **Invisible laser radiation can be emitted from the aperture of the port when no cable is connected. Avoid exposure to laser radiation and do not stare into open apertures.**

Step 4 Insert a dust plug into the optical port openings of each interface that is not being used.

To install an interface cable, follow these steps:

Step 1 Attach an ESD-preventive wrist strap to your wrist and follow its instructions for use.

Step 2 Remove the connector dust cover, if one is present.

Step 3 Align the connector end of the cable to the appropriate port. Observe the receive (RX) and transmit (TX) cable relationship, as shown in Figure 29.

Figure 29 Attaching Fiber Cables (Simplex, SC Connectors Shown)

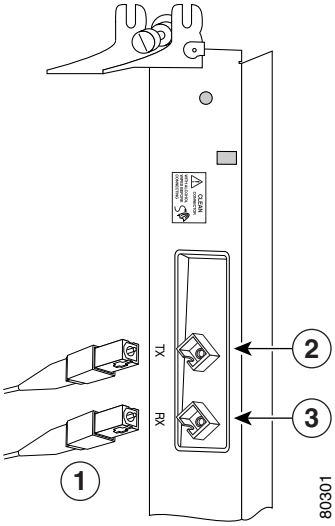

1	Simplex fiber cables
2	TX port
3	RX port

Step 4 Insert the connector until it clicks and locks into place.

Step 5 Attach the other end of the cable to another node in the SRP ring. The TX side A port on the line card must be connected to the RX side B port on the next node, and the RX side A port on the line card must be connected to the TX side B port on the next node. The labels next to the fiber connectors identify side A TX and RX, and side B TX and RX.

Step 6 Repeat these steps until all nodes are connected.

Note The fiber-optic connectors must be free of dust, oil, or other contaminants. Carefully clean the fiber-optic connectors using an alcohol wipe or other suitable cleanser.

As an example, Figure 30 illustrates the connections necessary to create a four-node DPT ring.

Figure 30 Creating a DPT Ring Using DPT Line Cards

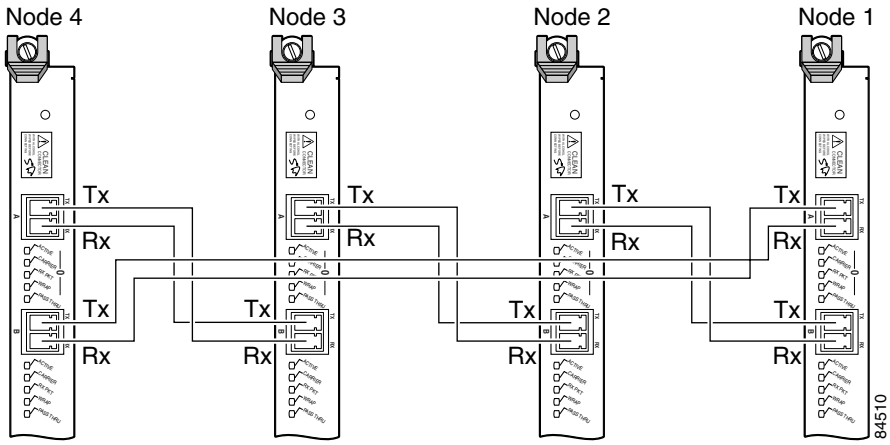

Use Table 16 and Figure 31 to help organize the cable connections for a four-node DPT ring.

Table 16 Cable Connections for a Four-Node Ring

From Node / Connector	To Node / Connector
Node 1 / TX side B	Node 2 / RX side A
Node 2 / TX side B	Node 3 / RX side A
Node 3 / TX side B	Node 4 / RX side A
Node 4 / TX side B	Node 1 / RX side A
Node 1 / TX side A	Node 4 / RX side B
Node 4 / TX side A	Node 3 / RX side B
Node 3 / TX side A	Node 2 / RX side B
Node 2 / TX side A	Node 1 / RX side B

Figure 31 Topology of Four-Node DPT Ring

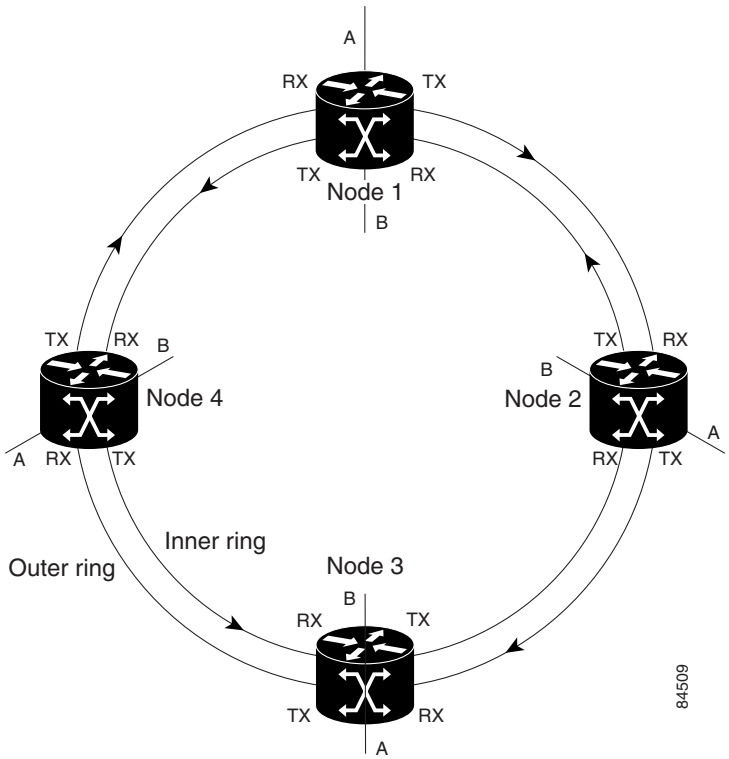

VSR Cable Requirements

Table 17 lists the required specifications for VSR cables.

Note You must use multimode fiber cables with fiber ribbon that meets these specifications.

Table 17 VSR Cable Specifications

Parameter	Specification
Fiber	62.5-micrometer fiber
Fiber cable maximum attenuation	3.75 dB/km
Minimum modal bandwidth	400 MHz/km at 850 nm
Link power budget	6.0 dB
Unallocated margin in link power budget	0.60 dB
Maximum number of connectors	4
Maximum connector loss (per connector)	0.5 dB
Minimum operating range	2-300 m

Removing and Installing the Mate Cable

Note This section only applies to the 1-Port OC-48c/STM-16c and 1-Port OC-192c/STM-64c DPT line cards.

Each 1-Port OC-48c/STM-16c and 1-Port OC-192c/STM-64c DPT line card is equipped with a front-panel connector labeled *Mate*. This connector is used with a copper coaxial cable that mates two 1-Port OC-48c/STM-16c or two 1-Port OC-192c/STM-64c DPT line cards. The copper coaxial cable is referred to as a mate cable. A mate cable is included in your line card product package.

Note Do not attempt to mate a 1-Port OC-48c/STM-16c DPT line card to a 1-Port OC-192c/STM-64c DPT line card. This configuration is not supported. You must mate two line cards of the same type.

The mate cable (Part Numbers CBL-SRP-OC48 and CBL-SRP-OC192) allows mated 1-Port OC-48c/STM-16c or mated 1-Port OC-192c/STM-64c DPT line cards to do the following:

- Share one IP address and MAC address
- Facilitate data traffic pass-through between two DPT line cards
- Synchronize the Ring Access Controller application-specific integrated circuits (RAC ASICs) on both line cards
- Create a two-fiber SRP ring

Note The procedures in the following sections use illustrations of a 1-Port OC-192c/STM-64c DPT line card to support the descriptions of removing and installing the mate cable. Although the mate cables of the 1-Port OC-48c/STM-16c and the 1-Port OC-192c/STM-64c DPT line cards differ, the use of the mate cable and the process of installing and removing a mate cable are basically the same. Therefore, separate procedures and illustrations are not included in this publication.

Removing a Mate Cable

To remove the mate cable, follow these steps:

Step 1 Press on the push-button latches on the sides of the connector.

Step 2 Gently pull the connector from the port on each line card until the connector is fully removed from each port.

Installing a Mate Cable

To install a mate cable, follow these steps:

Step 1 Use two hands to bend the straight mate cable into a U-shape. (See Figure 32.)

Figure 32 Bending and Handling the Mate Cable

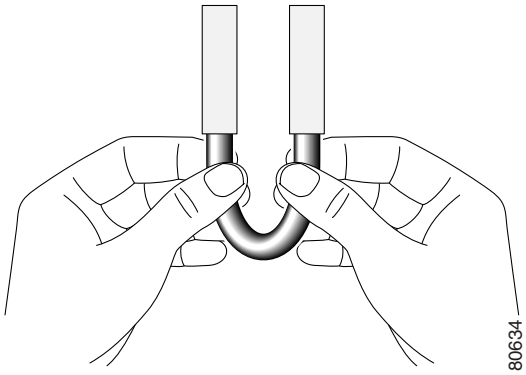

Figure 33 2 DPT Line Cards with Mate Cable (OC-192c/STM-64c Shown)

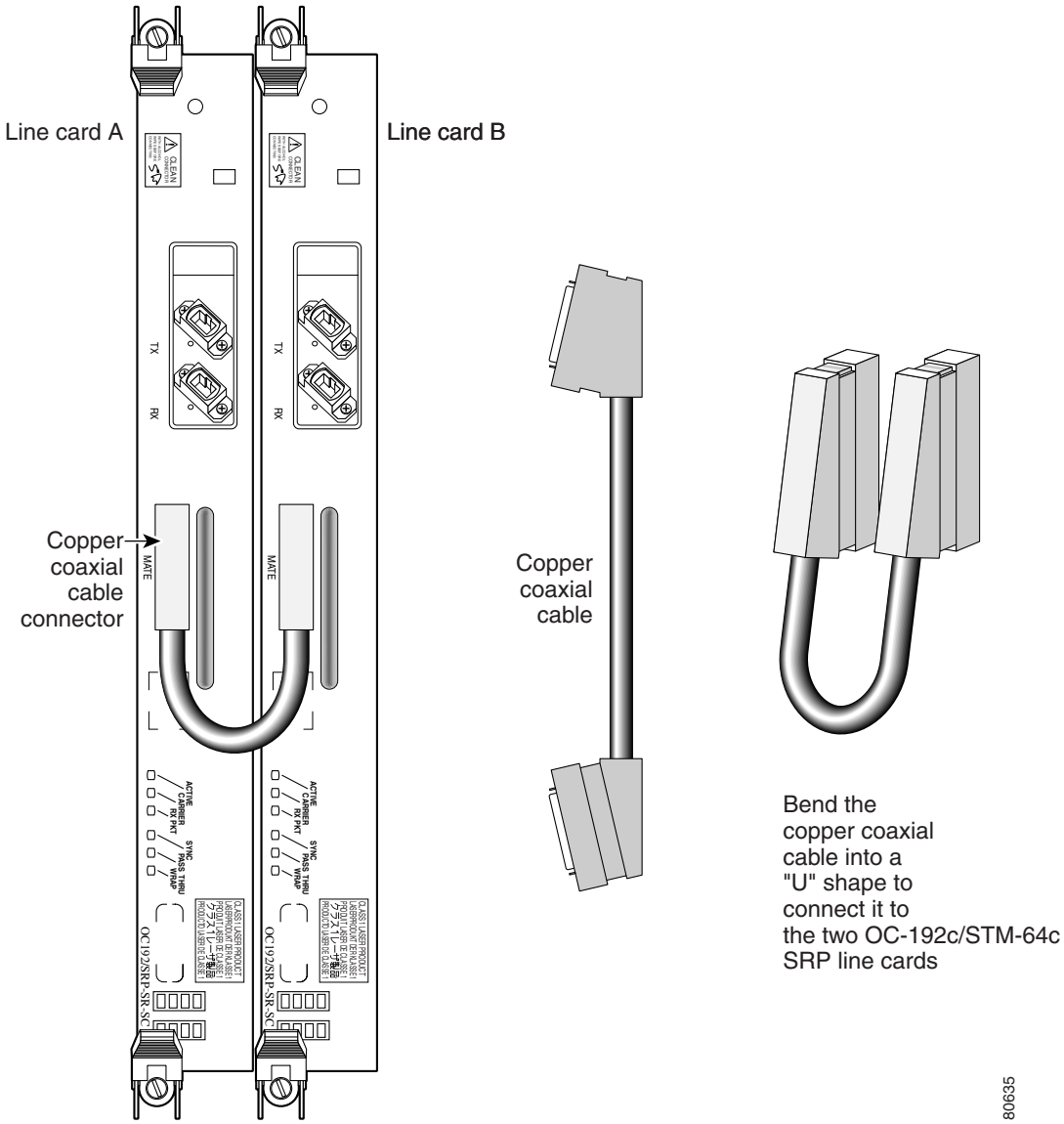

Step 2 Use the push-buttons on the sides of the cable connector to connect it to the line cards. (See Figure 33.)

Caution Do not bend the mate cable any more than necessary. Never bend one side of the mate cable when you disconnect the cable. Attach and remove both sides of the mate cable as a unit. When you remove the mate cable from both line cards, the system will pick line card side A or line card side B and enter a wrap automatically.

Mated DPT Line Card Operations

Each mated DPT line card is hot swappable and provides redundancy that allows you to remove one line card while your router retains presence on the SRP ring with the second line card, which remains installed in the chassis.

Note Although mated DPT line cards are slot independent, the adjacent router slot must always be available for a second DPT line card so that you can create a two-fiber ring.

When two DPT line cards are mated and the RACs are synchronized, they create a two-fiber ring without any wraps. When the RACs on the DPT line cards are unsynchronized, they automatically create a two-fiber ring that is in wrapped mode.

Figure 34 shows synchronized and unsynchronized conditions on an SRP ring.

The LEDs on the DPT line card indicate the conditions on the SRP ring. See the "Status LEDs" section on page 46 for details. To synchronize mated DPT line cards, see the "Configuring a Mated Line Card Interface" section on page 54.

Note If the Wrap LED on the line card goes on due to an unsynchronized signal fail, reseat or replace the mate cable.

When the line cards are not connected by the mate cable, each DPT line card is the equivalent of a single-fiber SRP ring on side B. The single-fiber SRP ring has a wrap at each end to ensure that all data packets will reach their destination. (See Figure 35.)

Figure 34 DPT Line Cards with Mate Cable (OC-192c/STM-64c Shown)

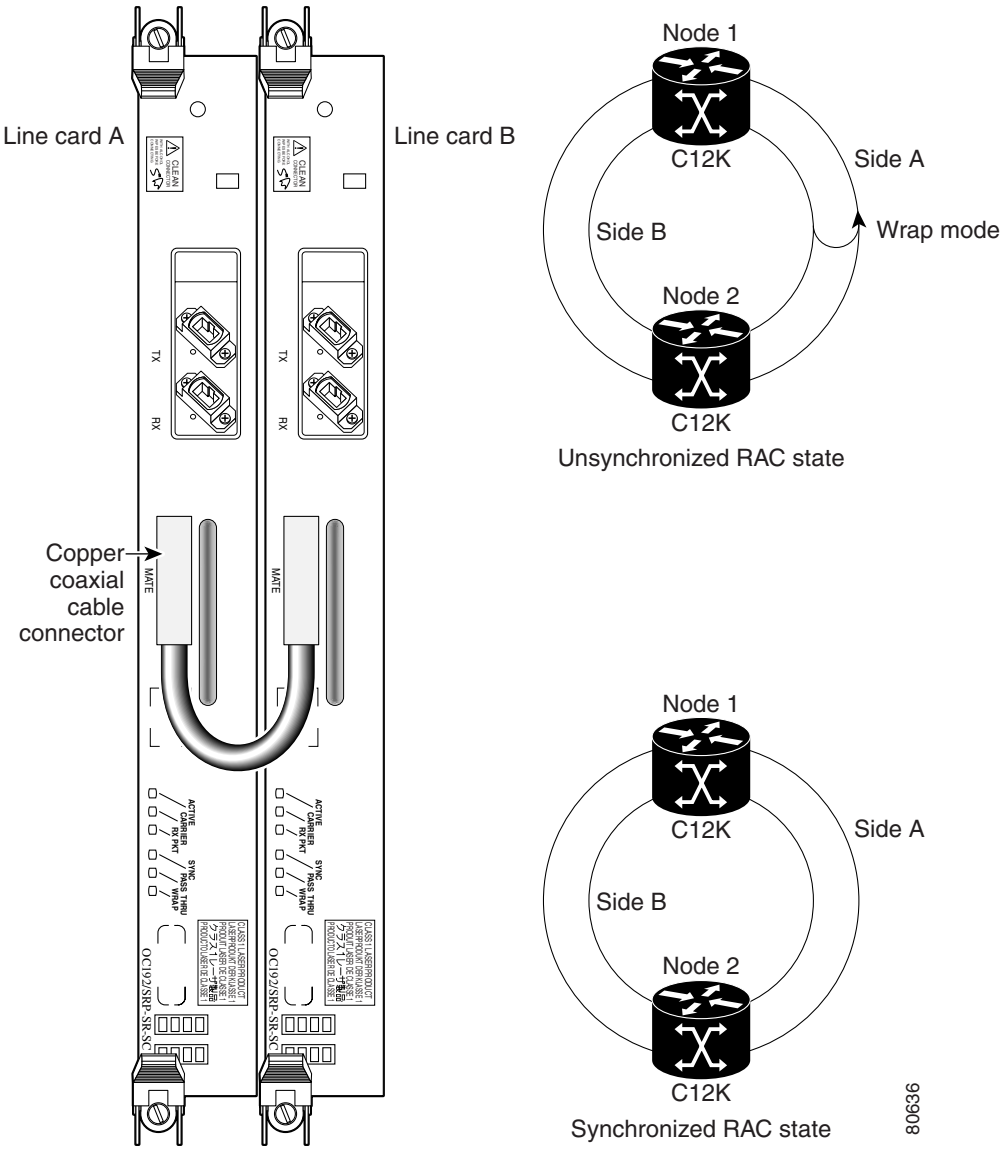

Figure 35 DPT Line Card as a Single-fiber SRP Ring (OC-192c/STM-64c Shown)

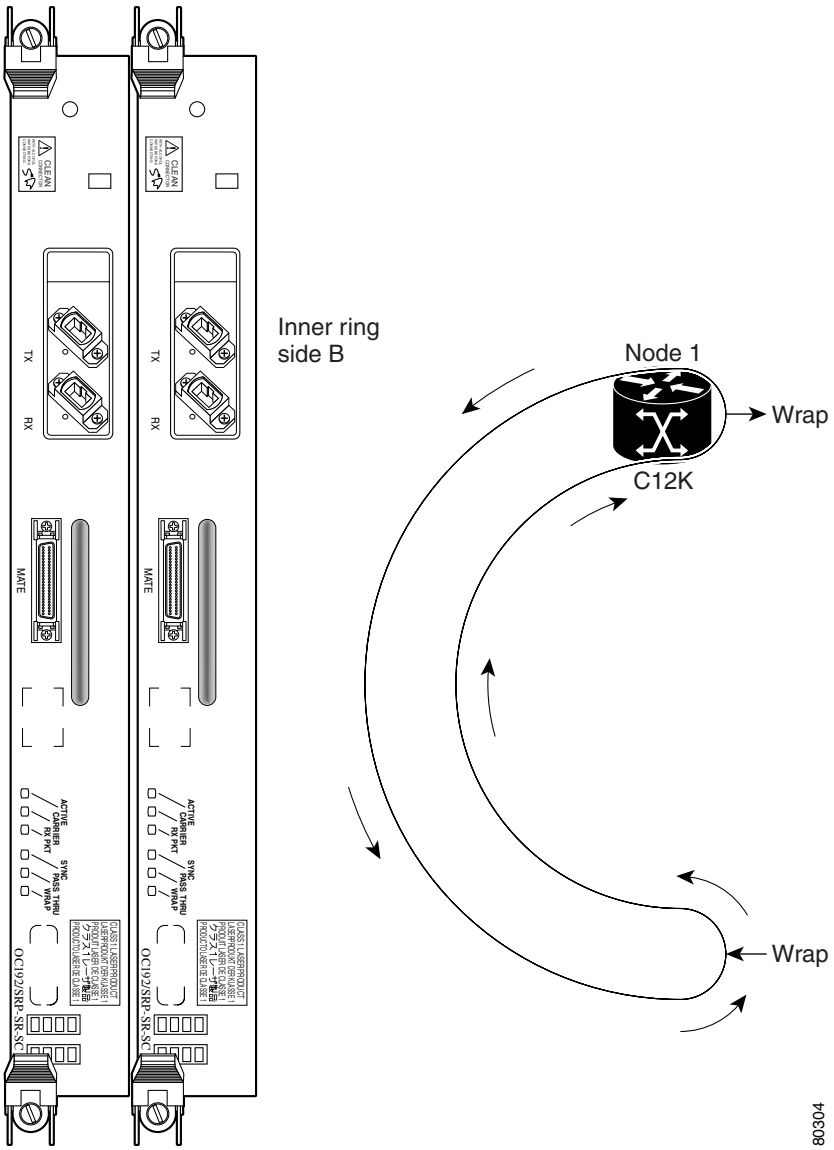

Verifying and Troubleshooting the Line Card Installation

The following sections describe how to verify and troubleshoot line card installation:

- Initial Boot Process
- Status LEDs
- Alphanumeric LEDs
- Troubleshooting the Installation

Initial Boot Process

During a typical line card boot process, the following events occur:

1. The line card maintenence bus (MBus) module receives power and begins executing the MBus software.
2. The line card MBus module determines the type of card on which it resides, performs internal checks, and prepares itself to accept its Cisco IOS software load from the RP.
3. The RP powers up the line card and loads the line card with its Cisco IOS software.

To verify that the line card is working properly, perform the following operational checks:

- During the line card boot process, observe the line card display LEDs to ensure that the card is running the typical initialization sequence. The sequence should end with IOS RUN.
- Observe the line card status LEDs to verify that the Active LED is on. If an Active LED is not on, verify that the associated interface is not shut down.

If one of these conditions is not met, refer to the "Configuring and Troubleshooting Interfaces" section on page 54 to identify any possible problems.

Status LEDs

After installing the line card and connecting the interface cables, verify that the line card is working properly by checking the following LEDs on the faceplate:

- Interface status LEDs show the status of each fiber-optic connector. DPT line cards can contain some or all of the following status LEDs (see Figure 1, Figure 2, Figure 3, Figure 4 and Figure 6 for your particular model):
  - Active—Indicates the active condition of this port
  - Carrier—Indicates the status of SONET framing reception on this port
  - RX PKT or RX Packet—Indicates the status of SRP packet reception on this port
  - Synch—Indicates the status of the ring access controllers (RACs) on mated 1-Port OC-48c/STM-16c DPT line cards
  - Wrap—Indicates the status of wrap conditions on this port
  - Pass Through or Pass Thru—Indicates if traffic is passing through the node transparently or normally
- Alphanumeric LEDs. Two four-digit alphanumeric LEDs display messages that explain the state of the line card. (See the "Alphanumeric LEDs" section on page 49.)

The status LEDs might not go on until after you have configured the line card interfaces (or turned them on, if they were shut down). To verify correct operation of each interface, complete the configuration procedures for the line card. (See the "Configuring and Troubleshooting Interfaces" section on page 54.)

The following sections describe status LED information for each DPT line card:

- 1-Port OC-12c/STM-4c DPT Line Card LEDs
- 4-Port OC-12c/STM-4c ISE DPT Line Card LEDs
- 1-Port OC-48c/STM-16c DPT Line Card LEDs
- 4-Port OC-48c/STM-16c DPT Line Card LEDs
- 1-Port OC-192c/STM-64c DPT Line Card LEDs

1-Port OC-12c/STM-4c DPT Line Card LEDs

See Figure 1 for the location of the LEDs on the 1-Port OC-12c/STM-4c DPT line card. The different operating states of the status LEDs are shown in Table 18.

Table 18 1-Port OC-12c/STM-4c DPT Line Card Status LED Descriptions

LED	Color/Activity	Description
ACTIVE[1]	Green	Port is active.
	Off	Port is not active.
CARRIER	Green	SONET frames are being received on this port.
	Off	SONET frames are not being received on this port.
RX PKT[2]	Green	Packets are being received on this port.[3]
	Off	Packets are not being received on this port.
PASS THROUGH	Orange	Interface is in pass-through mode.
	Off	Interface is operating normally.

1. This LED remains on even if the interface is administratively down or if the link to the network is lost.
2. Packets forwarded back onto the ring do not trigger this LED.
3. Because of SRP IPS packets, this LED remains on during normal SRP operation.

4-Port OC-12c/STM-4c ISE DPT Line Card LEDs

See Figure 2 for the location of the LEDs on the 4-Port OC-12c/STM-4c ISE DPT line card. The different operating states of the status LEDs are shown in Table 19.

Table 19 4-Port OC-12c/STM-4c ISE DPT Line Card Status LED Descriptions

LED	Color/Activity	Description
ACTIVE[1]	Green	Port is active.
	Yellow (blinking)	Fiber misconnection detected (for example, side A is connected to neighbor side A).
	Yellow	Port fault (for example, no TX optical power)
	Off	Port is not active.
CARRIER	Green	SONET frames are being received on this port.
	Off	SONET frames are not being received on this port.
RX PKT[2]	Green	Packets are being received on this port.
	Off	Packets are not being received on this port.
WRAP	Green	Port is in an internal wrap condition.
	Yellow	Port is in a local wrap condition.
	Off	Port is operating normally. No wrap condition exists.
PASS THRU	Yellow	Port is in pass-through mode.
	Off	Port is operating normally.

1. This LED remains on even if the interface is administratively down or if the link to the network is lost.
2. Due to SRP IPS packets, this LED remains on during normal SRP operation.

1-Port OC-48c/STM-16c DPT Line Card LEDs

See Figure 3 for the location of the LEDs on the 1-Port OC-48c/STM-16c DPT Line Card. The different operating states of the status LEDs are shown in Table 20.

Table 20 1-Port OC-48c/STM-16c DPT Line Card Status LED Descriptions

LED	Color/Activity	Description
ACTIVE[1]	Green	Port is active.
	Off	Port is not active.
CARRIER	Green	SONET frames are being received on this port.
	Off	SONET frames are not being received on this port.
RX PKT[2]	Green	Packets are being received on this port.[3]
	Off	Packets are not being received on this port.
SYNCH	Green	Port is synchronized with a second (mated) DPT line card.
	Off	Port is not synchronized with a second (mated) DPT line card.
WRAP	Green	Port is in an internal wrap condition.
	Off	Port is operating normally. No wrap condition exists.
PASS THROUGH	Green	Port is in pass-through mode.
	Off	Port is operating normally.

1. This LED remains on even if the interface is administratively down or if the link to the network is lost.
2. Because of SRP IPS packets, this LED remains on during normal SRP operation.
3. Packets forwarded back onto the ring do not trigger this LED.

4-Port OC-48c/STM-16c DPT Line Card LEDs

See Figure 4 for the location of the LEDs on the 4-Port OC-48c/STM-16c DPT Line Card. The different operating states of the status LEDs are shown in Table 21.

Table 21 4-Port OC-48c/STM-16c DPT Line Card Status LED Descriptions

LED	Color/Activity	Description
ACTIVE[1]	Green	Port is active.
	Yellow (blinking)	Fiber misconnection detected (for example, side A is connected to neighbor side A).
	Off	Port is not active.
CARRIER	Green	SONET frames are being received on this port.
	Off	SONET frames are not being received on this port.
RX PACKET[2]	Green	Packets are being received on this port.[3]
	Off	Packets are not being received on this port.
WRAP	Green	Port is in an internal wrap condition.
	Yellow	Port is in a local wrap condition.
	Off	Port is operating normally. No wrap condition exists.

Table 21 4-Port OC-48c/STM-16c DPT Line Card Status LED Descriptions (continued)

LED	Color/Activity	Description
PASS THRU	Green	Port is in pass-through mode.
	Off	Port is operating normally.

1. This LED remains on even if the interface is administratively down or if the link to the network is lost.
2. Because of SRP IPS packets, this LED remains on during normal SRP operation.
3. Packets forwarded back onto the ring do not trigger this LED.

1-Port OC-192c/STM-64c DPT Line Card LEDs

See Figure 6 for the location of the LEDs on the 1-Port OC-192c/STM-64c DPT Line Card. The different operating states of the status LEDs are shown in Table 22.

Table 22 1-Port OC-192c/STM-64c DPT Line Card Status LED Descriptions

LED	Color/Activity	Description
ACTIVE[1]	Green	Port is active.
	Yellow (blinking)	Fiber misconnection detected (for example, side A is connected to neighbor side A).
	Off	Port is not active.
CARRIER	Green	SONET frames are being received on this port.
	Off	SONET frames are not being received on this port.
RX PKT[2]	Green	Packets are being received on this port.[3]
	Off	Packets are not being received on this port.
SYNC	Green	Port is synchronized with a second (mated) DPT line card.
	Off	Port is not synchronized with a second (mated) DPT line card.
WRAP	Green	Port is in an internal wrap condition.
	Yellow	Port is in a local wrap condition.
	Off	Port is operating normally. No wrap condition exists.
PASS THRU	Green	Port is in pass-through mode.
	Off	Port is operating normally.

1. This LED remains on even if the interface is administratively down or if the link to the network is lost.
2. Because of SRP IPS packets, this LED remains on during normal SRP operation.
3. Packets forwarded back onto the ring do not trigger this LED.

Alphanumeric LEDs

DPT line cards have two four-digit alphanumeric LED displays at one end of the faceplate, near the ejector lever, that display a sequence of messages indicating the state of the card. In general, the LEDs do not turn on until the RP recognizes and powers up the card. As it boots, the line card displays a sequence of messages similar to those in Table 23.

Note It is normal for some displayed messages to appear too briefly to be read. Also, some messages listed in Table 23 and Table 24 may not appear on your line card.

Table 23 Alphanumeric LED Messages During a Typical Initialization Sequence

LED Display[1]	Meaning	Source
MROM *nnnn*	MBus microcode execute; *nnnn* is the microcode version number.	MBus controller
LMEM TEST	Low memory on the line card is being tested.	Line card ROM monitor
LROM RUN	Low memory test has been completed.	Line card ROM monitor
BSS INIT	Main memory is being initialized.	Line card ROM monitor
RST SAVE	Contents of the reset reason register are being saved.	Line card ROM monitor
IO RST	Reset I/O register is being accessed.	Line card ROM monitor
EXPT INIT	Interrupt handlers are being initialized.	Line card ROM monitor
TLB INIT	TLB is being initialized.	Line card ROM monitor
CACH INIT	CPU data and instruction cache is being initialized.	Line card ROM monitor
MEM INIT	Size of the main memory on the line card is being discovered.	Line card ROM monitor
LROM RDY	ROM is ready for the download attempt.	Line card ROM monitor
ROMI GET	ROM image is being loaded into line card memory.	RP IOS software
ROM VGET[2]	ROM image is receiving a response.	RP IOS software
FABI WAIT	Line card is waiting for the fabric downloader to load.[3]	RP IOS software
FABM WAIT[2]	Line card is waiting for the fabric manager to report that the fabric is usable.	RP IOS software
FABL DNLD	Fabric downloader is being loaded into line card memory.	RP IOS software
FABL STRT	Fabric downloader is being launched.	RP IOS software
FABL RUN	Fabric downloader has been launched and is running.	RP IOS software

Table 23 Alphanumeric LED Messages During a Typical Initialization Sequence (continued)

LED Display[1]	Meaning	Source
IOS DNLD	Cisco IOS software is being downloaded into line card memory.	RP IOS software
IOS FABW[2]	Cisco IOS software is waiting for the fabric to be ready.	RP IOS software
IOS VGET[2]	Line card is obtaining the Cisco IOS version.	RP IOS software
IOS RUN	Line card is enabled and ready for use.	RP IOS software
IOS STRT	Cisco IOS software is being launched.	RP IOS software
IOS TRAN	Cisco IOS software is transitioning to active.	RP IOS software
IOS UP	Cisco IOS software is running.	RP IOS software

1. The entire LED sequence shown in Table 23 might occur too quickly for you to read; therefore, this sequence is provided in this tabular form as a baseline for how a line card should function at startup.
2. This LED sequence only appears in Cisco IOS release 12.0(24)S or later.
3. The fabric downloader loads the Cisco IOS software image onto the line card.

Table 24 lists other messages displayed on the line card alphanumeric LED displays.

Table 24 Other Alphanumeric LED Messages

LED Display	Meaning	Source
MAL FUNC	Line card malfunction reported by field diagnostics.	RP
MISM ATCH[1]	Line card type mismatch in paired slots.	RP
PWR STRT[1]	Line card has been newly powered on.	RP
PWR ON	Line card is powered on.	RP
IN RSET	In reset.	RP
RSET DONE	Reset complete.	RP
MBUS DNLD	MBus agent downloading.	RP
MBUS DONE	MBus agent download complete.	RP
ROMI DONE	Acquisition of ROM image complete.	RP

Table 24 Other Alphanumeric LED Messages (continued)

LED Display	Meaning	Source
MSTR WAIT	Waiting for mastership determination.	RP
CLOK WAIT	Waiting for slot clock configuration.	RP
CLOK DONE	Slot clock configuration done.	RP
FABL LOAD	Loading fabric downloader[2] complete.	RP
IOS LOAD	Downloading of Cisco IOS software is complete.	RP
BMA ERR	Cisco IOS software BMA error.	RP
FIA ERR	Cisco IOS fabric interface ASIC configuration error.	RP
CARV ERR	Buffer carving failure.	RP
DUMP REQ	Line card requesting a core dump.	RP
DUMP RUN	Line card dumping core.	RP
DUMP DONE	Line card core dump complete.	RP
DIAG MODE	Diagnostic mode.	RP
DIAG LOAD	Downloading field diagnostics over the MBus.	RP
DIAG F_LD	Downloading field diagnostics over the fabric.	RP
DIAG STRT	Launching field diagnostics.	RP
DIAG HALT	Cancel field diagnostics.	RP
DIAG TEST	Running field diagnostics tests.	RP
DIAG PASS[1]	Field diagnostics were completed successfully.	RP
POST STRT	Launching power-on self-test (POST).	RP
UNKN STAT	Unknown state.	RP
ADMN DOWN	Line card is administratively down.	RP

Table 24 Other Alphanumeric LED Messages (continued)

LED Display	Meaning	Source
SCFG PRES[1]	Incorrect **hw-module slot srp** command entered.	RP
SCFG[1] REDQ	Required **hw-module slot srp** command not entered.	RP

1. This LED sequence only appears in Cisco IOS release 12.0(24)S or later.
2. The fabric downloader loads the Cisco IOS software image onto the line card.

Troubleshooting the Installation

If the Active LED or the alphanumeric display LEDs on a line card do not go on, there is either a problem with the line card installation or a hardware failure. To verify that the line card is installed correctly, follow these steps:

Step 1 If the Active LED fails to go on, but the alphanumeric display LEDs on the line card indicate activity, verify that the initialization sequence ends with IOS RUN. If this is the case, you should verify that the interface is not shut down. If not, suspect a circuitry problem with the Active LED and contact a service representative for further assistance.

Step 2 If the Active LED on the line card fails to go on or the alphanumeric display LEDs do not indicate IOS RUN, check the router connections as follows:

a. Verify that the line card board connector is fully seated in the backplane. Loosen the captive installation screws and firmly pivot the ejector levers toward each other until both are perpendicular to the line card faceplate. Tighten the captive installation screws.

b. Verify that all power cords and data cables are firmly connected at both ends.

c. Verify that all memory modules on the card are fully seated and secured to their sockets.

After the line card reinitializes, the Active LED on the line card should go on. If the Active LED goes on, the installation is complete; if the Active LED does not go on, proceed to the next step.

Step 3 If you are installing two mated DPT line cards, use the **show running configuration** EXEC command to determine if the SRP interface is *administratively down*. If the SRP interface is disabled, enter the **hw-module slot** *number* **srp** configuration command to enable the SRP interface. The problem may have occurred if you installed line cards in reversed order.

Step 4 If the Active LED still fails to go on, remove the DPT line card and try installing it in another available line card slot.

- If the Active LED goes on when the line card is installed in the new slot, suspect a failed backplane port in the original line card slot.
- If the Active LED and alphanumeric display LEDs still do not go on, halt the installation. Contact a service representative to report the faulty equipment and obtain further instructions.

Step 5 If an error message displays on the console terminal during the line card initialization, see the appropriate reference publication for error message definitions. If you experience other problems that you cannot solve, contact a service representative for assistance.

For more information on troubleshooting and diagnostics, refer to the installation and configuration guide that came with your Cisco 12000 Series Internet Router.

Configuring and Troubleshooting Interfaces

This section provides procedures and configuration examples to configure your DPT line card (s). A command line interface (CLI) is provided to configure and display parameters for both the DPT and the SONET/SDH framer. It also contains troubleshooting information.

This section contains the following procedures:

- Configuring a Mated Line Card Interface
- Configuring the Interface
- Advanced Line Card Troubleshooting
- Line Card Diagnostics Using Cisco IOS Software Release 12.0(22)S and Later
- Line Card Diagnostics Using Cisco IOS Software Releases Prior to 12.0(22)S

Configuring a Mated Line Card Interface

Note This section only applies to the 1-Port OC-48c/STM-16c and the 1-Port OC-192c/STM-64c DPT line cards.

When two 1-Port OC-48c/STM-16c or two 1-Port OC-192c/STM-64c DPT line cards are connected by a mate cable, they behave as one SRP interface and share one IP address. Once configured, you will access the DPT interface created using the two cards through the line card that acts as Side A of the DPT node.

Note Side A is automatically the leftmost (or topmost if horizontal) slot of the pair of mated DPT line cards.

A Cisco 12000 Series Internet Router identifies an SRP interface address by its line card slot number and port number, in the format *slot/port*. For example, the *slot/port* address of an SRP interface on a 1-Port OC-48c/STM-16c DPT line card installed in line card slot 4 and port 0 is 4/0. In the case of mated DPT line cards, you will access only the line card in the first slot of the pair of slots.

To initially configure two mated DPT line cards in, for example, slot 4 and slot 5 of a Cisco 12000 Series Internet Router, follow these steps:

Step 1 Use the **enable** command to enter the privileged EXEC command mode. The system will prompt you for a password if one is set.

```
Router> enable
```

Step 2 Enter the **show running configuration** command to verify that both line cards are shut down.

```
Router# show running configuration
.......
```

```
hw-module slot 4 shutdown
hw-module slot 5 shutdown
```

Step 3 Enter the **configure terminal** command to enter configuration mode.

```
Router# configure terminal
```

Step 4 Enter the **hw-module** *slot* **srp** configuration command to bring up the line cards.

```
Router (config)# hw-module slot 4 srp
Router (config)# end
```

where *slot* is the slot number of the leftmost line card, or side A.

Step 5 Write the new configuration to nonvolatile random access memory (NVRAM) by using the **copy running-config startup-config** command:

```
Router# copy running-config startup-config
[OK]
```

Step 6 Use the **show gsr** command to monitor stages of the IOS download to the line cards.

When the Cisco IOS software is successfully downloaded, the LED status should be "IOS RUN."

Configuring the Interface

After you verify that a new line card is installed correctly (the Active LED goes on), you must enter the privileged EXEC command mode by using the **enable** command. The system will prompt you for a password if one is set. Use the **configure** command to configure the new interface.

A Cisco 12000 Series Router identifies an interface address by its line card slot number and port number, in the format *slot/port*. For example, the slot/port address of an interface on an 1-Port OC-48c/STM-16c DPT line card installed in line card slot 2 and chassis port 0 is 2/0. Even though the card contains only one port, you must use the *slot/port* notation.

Use the **configure terminal** command to enter the configuration mode if you want to change the default configuration values on the line card. Be prepared with the information you will need, such as the IP address. (See Table 25.)

Table 25 DPT Line Card Configuration Default Values

Parameter	Configuration Command	Default Value
CDP[1]	[**no**] **cdp enable**	enabled for all cards except 1-Port OC-12c/STM-4c and 4-Port OC-12c/STM-4c ISE DPT line cards
Framing	**srp framing** {**sdh** | **sonet**} [**a** | **b**]	SONET
SONET overhead	**srp flag** {**c2** | **j0**} *value* [**a** | **b**]	c2 set to 0x16; j0 set to 0x01
MTU[2]	[**no**] **mtu** *bytes*	4470 bytes
Clock source	**srp clock-source** {**internal** | **line**} [**a** | **b**]	internal
IPS[3] timer	**srp ips timer** *value*	1; values can be from 1 to 60
Topology timer	**srp topology-timer** *value*	5; values can be from 1 to 600

Table 25 DPT Line Card Configuration Default Values (continued)

Parameter	Configuration Command	Default Value
WTR[4] timer	**srp ips wtr-timer** *value*	60; values can be from 10 to 600
Low rate limit[5]	**srp tx-traffic-rate low** *value*	9852 for OC-192c/STM-64c; 2468 for OC-48c/STM-16c; 612 for OC-12c/STM-4c
High rate limit[5]	**srp tx-traffic-rate high** *value*	100 for OC-192c/STM-64c; 20 for OC-48c/STM-16c; 10 for OC-12c/STM-4c
Priority map	**srp priority-map transmit**	6; values can be from 1 to 8
SRR	**srp srr enable**	disabled

1. CDP=Cisco Discovery Protocol
2. MTU=Maximum Transmission Unit
3. IPS=Intelligent Protection Switching
4. WTR=Wait to Restore
5. Not applicable to 1-Port OC-12c/STM-4c DPT line card

To configure a DPT line card, follow these steps:

Step 1 Confirm that the system recognizes the card by entering the **show version** command.

```
Router# show version
```

Step 2 Check the status of each port by entering the **show interface srp** *slot/port* command.

```
Router# show interface srp 2/0
```

Step 3 Enter configuration mode and specify that the console terminal will be the source of the configuration commands.

```
Router# configure terminal
```

Step 4 Enable IP routing by entering the **ip routing** command.

```
Router(config)# ip routing
```

Step 5 For the 4-Port OC-12c/STM-4c ISE DPT line card, you can enable high-speed IP multicast packet forwarding on the hardware engine of the line card by using the **hw-module slot ip multicast hw-accelerate** command:

```
Router(config)# hw-module slot 2 ip multicast hw-accelerate
```

Step 6 At the prompt, specify the new interface to configure by entering the **interface** command, followed by the *type* (**srp**) and *slot/port* (line card slot number/port number). The example that follows is for a 1-Port OC-48c/STM-16c DPT line card in chassis slot 2, port 0.

```
Router(config)# interface srp 2/0
```

Step 7 Assign an IP address and subnet mask to the interface with the **ip address** configuration command.

```
Router(config-if)# ip address 10.0.0.1 255.255.255.0
```

Step 8 Verify that the default value for the clock source is correct.

The default setting is **srp clock source internal**. Typically, when two Cisco 12000 Series Routers are connected back to back, or are connected over dark fiber, where no external clocking is available, set the clock source on each device to internal (default). If a router is connected to a SONET/SDH Add/Drop Multiplexer (ADM), configure the clock-source for **srp clock source line** on the side that is actually connected to the ADM.

Note The only time both sides A and B should be set to *source line* is when both sides are connected to *different* ADM systems.

```
Router(config-if)# srp clock-source line a

Router(config-if)# srp clock-source line b
```

Step 9 Change the shutdown state to up and enable the interface.

```
Router(config-if)# no shutdown
```

The **no shutdown** command passes an **enable** command to the line card. It also causes the line card to configure itself automatically, based on the previous configuration commands sent.

Note The line card cable is connected to both a Cisco 12000 Series Router device and a high-end router or switch. Step 10 to Step 12 apply to both the Cisco 12000 Series Router device and the other device.

Step 10 SONET is the default framing type. If you are connected to an SDH network, you need to change the framing type by entering the **srp framing** interface configuration command.

```
Router1(config-if)# srp framing sdh [a|b]
```

Step 11 Add any other configuration commands required to enable routing protocols and adjust the interface characteristics.

Step 12 When you have included all the configuration commands to complete the configuration, enter **Ctrl-Z** (press the **Control** key while you press **Z**) to exit configuration mode.

Step 13 Write the new configuration to memory.

```
Router1# copy running-config startup-config
```

The system displays an OK message when the configuration has been stored.

Advanced Line Card Troubleshooting

This section provides advanced troubleshooting information in the event of a line card failure. It also provides pointers for identifying whether or not the failure is hardware related. This section does not include any software-related failures, except for those that are often mistaken for hardware failures.

Note This section assumes that you possess basic proficiency in the use of Cisco IOS software commands.

By reading this section and by following the troubleshooting steps, you should be able to determine the nature of the problems you are having with your line card. The first step is to identify the cause of the line card failure or console errors that you are seeing. To discover which card may be at fault, it is essential to collect the output from the following commands:

- **show context summary**
- **show logging**
- **show logging summary**
- **show diag** *slot*
- **show context slot** *slot*

Along with these **show** commands, you should also gather the following information:

- Console Logs and Syslog Information—This information is crucial if multiple symptoms are occurring. If the router is configured to send logs to a Syslog server, you may see some information on what has occurred. For console logs, it is best to be directly connected to the router on the console port with logging enabled.
- Additional Data—The **show tech-support** command is a compilation of many different commands, including **show version**, **show running-config**, and **show stacks**. This information is required when working on issues with the Cisco Technical Assistance Center (TAC).

Note It is important to collect the **show tech-support** data before doing a reload or power cycle. Failure to do so can cause all information about the problem to be lost.

Note Output from these commands will vary slightly depending on which line card you are using, but the basic information will be the same.

Output Examples

The following are examples of system output that you may see if your Cisco 12000 Series Internet Router line card fails. Key data in the output is underlined.

- show context summary Output
- show logging Output
- show diag slot Output
- show context slot Output

show context summary Output

```
Router# show context summary
CRASH INFO SUMMARY
Slot 0 : 0 crashes
Slot 1 : 1 crashes
1 . crash at 10:36:20 UTC Wed Dec 19 2001
Slot 2 : 0 crashes
Slot 3 : 0 crashes
Slot 4 : 0 crashes
Slot 5 : 0 crashes
Slot 6 : 0 crashes
(remainder of output omitted)
```

show logging Output

```
Router# show logging
Syslog logging: enabled (2 messages dropped, 0 messages rate.limited, 0 flushes,
0 overruns)
Console logging: level debugging, 24112 messages logged
Monitor logging: level debugging, 0 messages logged
Buffer logging: level debugging, 24411 messages logged
Logging Exception size (4096 bytes)
Trap logging: level informational, 24452 message lines logged
5d16h: %LCINFO.3.CRASH: Line card in slot 1 crashed
5d16h: %GRP.4.RSTSLOT: Resetting the card in the slot: 1,Event: 38
5d16h: %IPCGRP.3.CMDOP: IPC command 3
5d16h: %CLNS.5.ADJCHANGE: ISIS: Adjacency to malachim2 (GigabitEthernet1/0) Up,
n8 (slot1/0): linecard is disabled
.Traceback= 602ABCA8 602AD8B8 602B350C 602B3998 6034312C 60342290 601A2BC4 601A2BB0
5d16h: %LINK.5.CHANGED: Interface GigabitEthernet1/0, changed state to
administratively down
5d16h: %LINEPROTO.5.UPDOWN: Line protocol on Interface GigabitEthernet1/0,
changed state to down
5d16h: %GRP.3.CARVE_INFO: Setting mtu above 8192 may reduce available buffers
on Slot: 1.
SLOT 1:00:00:09: %SYS.5.RESTART: System restarted ..
(remainder of output omitted)
```

show diag *slot* Output

```
Router# show diag 1
SLOT 1 (RP/LC 1 ): 3 Port Gigabit Ethernet
MAIN: type 68, 800.6376.01 rev E0 dev 0
HW config: 0x00 SW key: 00.00.00
PCA: 73.4775.02 rev E0 ver 2
HW version 2.0 S/N CAB0450G8FX
MBUS: Embedded Agent
Test hist: 0x00 RMA#: 00.00.00 RMA hist: 0x00
DIAG: Test count: 0x00000001 Test results: 0x00000000
FRU: Linecard/Module: 3GE.GBIC.SC=
Route Memory: MEM.GRP/LC.64=
Packet Memory: MEM.LC1.PKT.256=
L3 Engine: 2 . Backbone OC48 (2.5 Gbps)
MBUS Agent Software version 01.46 (RAM) (ROM version is 02.10)
Using CAN Bus A
ROM Monitor version 10.06
Fabric Downloader version used 05.01 (ROM version is 05.01)
Primary clock is CSC 0 Board is analyzed
Board State is Line Card Enabled (IOS RUN )
Insertion time: 00:00:10 (5d16h ago)
DRAM size: 67108864 bytes
FrFab SDRAM size: 134217728 bytes, SDRAM pagesize: 8192 bytes
ToFab SDRAM size: 134217728 bytes, SDRAM pagesize: 8192 bytes
1 crash since restart
```

show context slot Output

```
Router# show context slot 2
CRASH INFO: Slot 2, Index 1, Crash at 12:24:22 MET Wed Nov 28 2001
VERSION:
GS Software (GLC1.LC.M), Version 12.0(18)S1, EARLY DEPLOYMENT RELEASE SOFTWARE (fc1)
TAC Support: http://www.cisco.com/tac
Compiled Fri 07.Sep.01 20:13 by nmasa
Card Type: 3 Port Gigabit Ethernet, S/N
System exception: SIG=23, code=0x24, context=0x4103FE84
```

```
System restarted by a Software forced crash
STACK TRACE:
.Traceback= 400BEB08 40599554 4004FB64 4005B814 400A1694 400A1680
CONTEXT:
$0 : 00000000, AT : 41040000, v0 : 00000032, v1 : 4103FC00
a0 : 4005B0A4, a1 : 41400A20, a2 : 00000000, a3 : 00000000
t0 : 41D75220, t1 : 8000D510, t2 : 00000001, t3 : FFFF00FF
t4 : 400C2670, t5 : 00040000, t6 : 00000000, t7 : 4150A398
s0 : 0000003C, s1 : 00000036, s2 : 4103C4D0, s3 : 41D7EC60
s4 : 00000000, s5 : 00000001, s6 : 41027040, s7 : 00000000
t8 : 41A767B8, t9 : 00000000, k0 : 415ACE20, k1 : 400C4260
GP : 40F0DD00, SP : 41D7EC48, s8 : 4102D120, ra : 40599554
EPC : 0x400BEB08, SREG : 0x3400BF03, Cause : 0x00000024
ErrorEPC : 0x400C6698, BadVaddr : 0xFFBFFFFB
.Process Traceback= No Extra Traceback
SLOT 2:00:00:09: %SYS.5.RESTART: System restarted ..
(remainder of output omitted)
```

The type of failure that has occurred in the **show context slot 2** example is identified by the underlined *SIG=* value. The three most common types of line card failures are:

- Software Forced Crash (SIG=23)
- Bus Error (SIG=10)
- Cache Parity Exception (SIG=20)

In the example above, the line card has failed and has caused a reload because of a *software forced crash* exception. Once you have determined the cause and collected the necessary output, you can check for any caveats in your Cisco IOS software release using the Bug Toolkit (available to registered Cisco.com users only).

Checking the Current Status of the Line Card

Once you have determined if the problems are caused by system errors in the log or an actual crash, it is important to check the current status of the line card to see if it has recovered from the failure. The status of individual line cards can be identified either by examining the alphanumeric LEDs located on the front of the line card, or by issuing the **show led** command.

show led Output

```
Router# show led
SLOT 1 : RUN IOS
SLOT 6 : DNLD FABL
SLOT 7 : RP ACTV
SLOT 10 : RUN IOS
SLOT 11 : RUN IOS
SLOT 13 : RUN IOS
SLOT 14 : RUN IOS
```

Note It is possible for the value of an alphanumeric LED to be reversed. For example, IOS RUN may be displayed as RUN IOS.

If the alphanumeric LEDs on the line card display anything other than IOS RUN, or the RP is neither the active Master/Primary nor the Slave/Secondary, there is a problem and the line card has not fully loaded correctly. Before replacing the line card, try fixing the problem by following these steps:

Step 1 Reload the microcode using the global configuration **microcode reload** *slot* command.

Step 2 Reload the line card using the **hw-module slot** reload command. This causes the line card to reset and download the MBus and fabric downloader software modules before attempting to download the Cisco IOS software.

or

Step 3 Reset the line card manually. This may rule out any problems that are caused by a bad connection to the MBus or switching fabric.

Fabric Ping Failure

Fabric ping failures occur when either a line card or the secondary RP fails to respond to a fabric ping request from the primary RP over the switch fabric. Such failures are a problem symptom that should be investigated. They are indicated by the following error messages:

```
%GRP-3-FABRIC_UNI: Unicast send timed out (1)
%GRP-3-COREDUMP: Core dump incident on slot 1, error: Fabric ping failure
%LCINFO-3-CRASH: Line card in slot 1 crashed
```

You can find more information about this issue on Cisco.com in the *Troubleshooting Fabric Ping Timeouts and Failures on the Cisco 12000 Series Internet Router* publication.

Error Messages

If you receive any error message related to a line card, you can use the Error Message Decoder Tool (on Cisco.com) to find the meaning of this error message. Some errors point to a hardware issue, while others indicate a Cisco IOS software caveat or a hardware issue on another part of the router. This publication does not cover all these messages.

Note Some messages related to Cisco Express Forwarding (CEF) and Inter Process-Communication (IPC) are explained on Cisco.com in the *Troubleshooting CEF-Related Error Messages* publication.

FPGA Error Messages

If the line card does not boot and you receive an error message indicating that there is a problem with the Field-Programmable Gate Array (FPGA) image (or if the line card alphanumeric LED display remains frozen in IOS STRT state), you need to upgrade the FPGA image using the **update-fpga** option in the **diag** command.

Note The **diag** command and the **update-fpga** option are documented in the *Field Diagnostics for the Cisco 12000 Series Internet Router* publication.

When the Cisco IOS image boots, it verifies that a compatible FPGA image is running on the router. The major version number of the FPGA image must be the same as that expected by the Cisco IOS image; the minor version number on the FPGA image must be the same or greater than the minor version number

expected by the Cisco IOS image. For example, if the Cisco IOS image expects a minimum FPGA image of 03.02, the software will verify that the actual major version number of the FPGA image in the line card bootflash is 03, and that the minor version number is 02 or above.

Example error messages indicating an FPGA problem appear as follows:

Error Message `No FPGA image available for slot0. Please run field diagnostics image on slot0 to upgrade the FPGA image.`

Explanation There is currently no valid FPGA image in the bootflash of the line card. You must load a valid FPGA image to the line card bootflash.

Error Message `FPGA image not appropriate or corrupted for slot0. Please run field diagnostics on slot0 to upgrade the FPGA image.`

Explanation The FPGA image currently loaded in the line card bootflash is not compatible with the Cisco IOS software release currently running on the router or is corrupted. Upgrade the FPGA image to the correct version.

Note Do not confuse the line card bootflash with the route processor (RP) bootflash. FPGA images are loaded only to the line card bootflash.

Note FPGA error messages are only applicable to 4-Port OC-12c/STM-4c ISE DPT line cards.

Line Card Diagnostics Using Cisco IOS Software Release 12.0(22)S and Later

Note Output from this procedure will vary slightly depending on which line card you are using, but the basic information will be the same.

Line card field diagnostic software is designed to identify any faulty line card within a Cisco 12000 Series Internet Router. Before Cisco IOS Software Release 12.0(22)S, the field diagnostic software was imbedded within the Cisco IOS software. Starting with Cisco IOS Software Release 12.0(22)S, this software is unbundled from the main image and must be downloaded from Cisco.com using the IOS Upgrade Planner.

Cisco initiated this change to accommodate users with 20-MB Flash memory cards. Field diagnostics are now stored and maintained as a separate image under the following name:

c12k-fdiagsbflc-mz-xxx-xx.s (where xxx-xx is the version number)

This image must be available on a separate Flash memory card, Flash disk, or TFTP boot server in order to load line card field diagnostics. The latest version is always available on Cisco.com. RP and fabric tests remain embedded within the main Cisco IOS software image.

While the diagnostic test is running, the line card does not function normally and cannot pass any traffic for the duration of the testing (5 to 20 minutes depending upon the complexity of the line card). Without the *verbose* keyword, the command provides a truncated output message. When communicating with the Cisco TAC, the verbose mode is helpful in identifying specific problems. The output of the diagnostic test without the verbose command appears like the following example:

```
Router# diag 7 tftp://223.255.254.254/diagnostic/award/c12k.fdiagsbflc.mz.120-25.s
Running DIAG config check
Fabric Download for Field Diags chosen: If timeout occurs, try 'mbus' option.
Runnning Diags will halt ALL activity on the requested slot. [confirm]
Launching a Field Diagnostic for slot 7
Downloading diagnostic tests to slot 7 via fabric (timeout set to 300 sec.)
5d20h: %GRP.4.RSTSLOT: Resetting the card in the slot: 7,Event:
EV_ADMIN_FDIAGLoading diagnostic/award/c12k.fdiagsbflc.mz.120-25.s from 223.255.254.254
(via Ethernet0): !!!!!!!!!!!!!!!!!!!!!!!!!!!!!!!!!!!!!!!!!!!!!!!!!!!!!!!!
5d20h: Downloading diags from tftp file tftp://223.255.254.254/diagnostic/award/
c12k.fdiagsbflc.mz.120-25.s
!!!!!!!!!!!!!!!!!!!!!!!!!!!!!!!!!!!!!!!!!!!!!!!!!!!!!!!!
[OK . 13976524 bytes]
FD 7> ****************************************************
FD 7> GSR Field Diagnostics V6.05
FD 7> Compiled by award on Tue Jul 30 13:00:41 PDT 2002
FD 7> view: award.conn_isp.FieldDiagRelease
FD 7> ****************************************************
Executing all diagnostic tests in slot 7
(total/indiv. timeout set to 2000/600 sec.)
FD 7> BFR_CARD_TYPE_OC12_4P_POS testing...
FD 7> Available test types 2
FD 7> 1
FD 7> Completed f_diags_board_discovery() (0x1)
FD 7> Test list selection received: Test ID 1, Device 0
FD 7> running in slot 7 (30 tests from test list ID 1)
FD 7> Skipping MBUS_FDIAG command from slot 2
FD 7> Just into idle state
Field Diagnostic ****PASSED**** for slot 7
Shutting down diags in slot 7
Board will reload
(remainder of output omitted)
```

The line card reloads automatically only after passing the test. If the line card fails the test, it will not reload automatically. You can manually reload the line card by using the **hw-module slot** *slot* **reload** command.

Field diagnostic results are stored in an electrically erasable programmable read-only memory (EEPROM) on the line card. It is possible to view the results of the last diagnostic test performed on the line card by executing the **diag** *slot* **previous** command.

There are some caveats that exist that cause diagnostic tests to fail, even though the line card is not faulty. As a precaution, if the line card fails and had been replaced previously, you should review this output with the Cisco TAC.

Line Card Diagnostics Using Cisco IOS Software Releases Prior to 12.0(22)S

Line card field diagnostic software is bundled with the main Cisco IOS Software to enable you to test whether a suspect line card is faulty. To use this feature, you must be in privileged enable mode, and issue the **diag** <*slot*> [*verbose*] command.

While the diagnostic test is running, the line card does not function normally and is not able to pass any traffic for the duration of the testing. Without the *verbose* keyword, the command provides a truncated output message. When communicating with the Cisco TAC, the verbose mode is helpful in identifying specific problems. The output of the diagnostic test without the verbose command appears like the following example:

```
Router#diag 3
Running DIAG config check
Running Diags will halt ALL activity on the requested slot
[confirm]
Router#
Launching a Field Diagnostic for slot 3
Downloading diagnostic tests to slot 3 (timeout set to 600 sec.)
*Nov 18 22:20:40.237: %LINK.5.CHANGED: Interface GigabitEthernet3/0,
changed state to administratively down
Field Diag download COMPLETE for slot 3
FD 3> ****************************************************
FD 3> GSR Field Diagnostics V4.0
FD 3> Compiled by award on Thu May 18 13:43:04 PDT 2000
FD 3> view: award.conn_isp.FieldDiagRelease
FD 3> ****************************************************
FD 3> BFR_CARD_TYPE_1P_GE testing...
FD 3> running in slot 3 (83 tests)
Executing all diagnostic tests in slot 3
(total/indiv. timeout set to 600/200 sec.)
Field Diagnostic: ****TEST FAILURE**** slot 3: last test run 51,
Fabric Packet Loopback, error 3
Shutting down diags in slot 3
slot 3 done, will not reload automatically
```

The line card reloads automatically only after passing the test. In the example above, the line card failed the test and did not reload automatically. You can manually reload the line card by using the **hw-module slot** <*slot*> **reload** command.

Field diagnostic results are stored in an EEPROM on the line card. It is possible to view the results of the last diagnostic test performed on the line card by executing the **diag** <*slot*> **previous** command.

There are some caveats that exist that cause diagnostic tests to fail, even though the line card is not faulty. As a precaution, if the line card fails and had been replaced previously, you should review this output with the Cisco TAC.

DPT Line Card Memory

Caution The user serviceability of memory modules varies from line card to line card. Read this section carefully before attempting to remove or install any line card memory module.

DPT line cards include the following types of memory:

- Route memory
- Packet memory
- Pointer look-up (PLU) memory (not user serviceable)
- Table look-up (TLU) memory (not user serviceable)

Line card memory configurations and memory socket locations differ, depending on the line card engine type. Table 26 lists the DPT line card engine types:

Table 26 DPT Line Card Engine Types

DPT Line Card	Line Card Engine Type
1-Port OC-12c/STM-4c	Engine 1
4-Port OC-12c/STM-4c ISE	Internet Services Engine (ISE)
1-Port OC-48c/STM-16c	Engine 2
4-Port OC-48c/STM-16c	Engine 4+
1-Port OC-192c/STM-64c	Engine 4+

Line Card Memory Locations

The following sections contain general line card memory information for each DPT line card:

- Engine 0 and Engine 1 Line Card Memory Locations
- Engine 2 Line Card Memory Locations
- ISE Line Card Memory Locations
- Engine 4 Line Card Memory Locations
- DPT Line Card Route Memory Options
- DPT Line Card Packet Memory Options

Memory removal and installation instructions are found in the "Removing and Installing Line Card Memory" section on page 70.

Engine 0 and Engine 1 Line Card Memory Locations

Figure 36 shows the dual in-line memory module (DIMM) socket locations on an Engine 0 or Engine 1 line card. This line card is equipped with six DIMM sockets:

- Two route memory DIMM sockets
- Two pairs of packet memory DIMM sockets (RX and TX pairs)

Figure 36 Engine 0 and Engine 1 Line Card Memory Locations

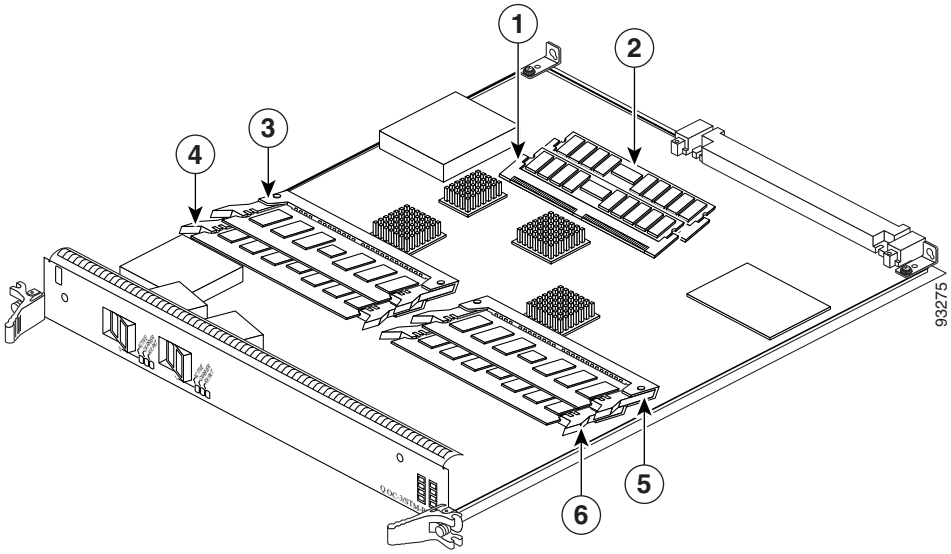

1	Route memory DIMM0	**4**	Packet memory RX DIMM1
2	Route memory DIMM1	**5**	Packet memory TX DIMM0
3	Packet memory RX DIMM0	**6**	Packet memory TX DIMM1

Engine 2 Line Card Memory Locations

Figure 37 shows the DIMM socket locations on an Engine 2 line card. This line card is equipped with eight DIMM sockets:

- Two route memory DIMM sockets
- Two pairs of packet memory DIMM sockets (RX and TX pairs)
- One pointer look-up (PLU) memory DIMM socket (not user serviceable)
- One table look-up (TLU) memory DIMM socket (not user serviceable)

Figure 37 Engine 2 Line Card Memory Locations

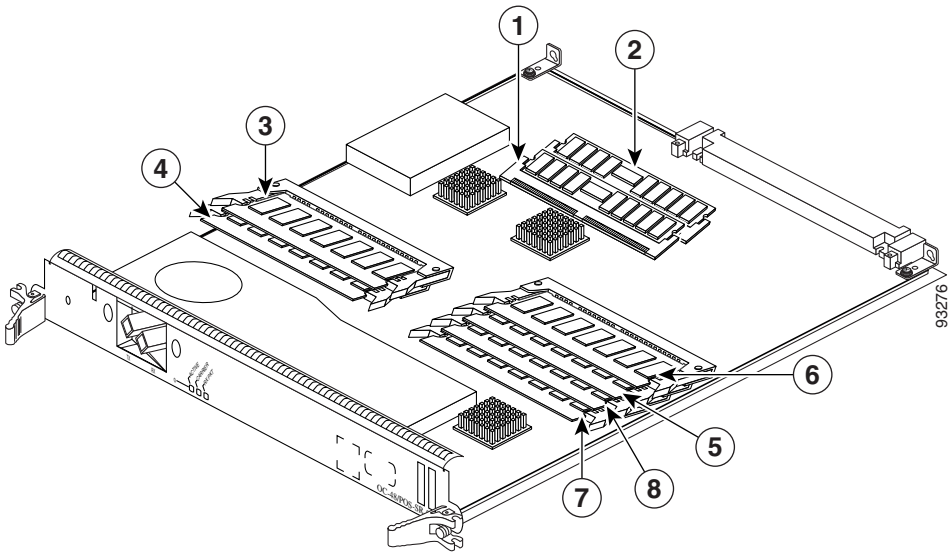

1	Route memory DIMM0	**5**	Packet memory RX DIMM0
2	Route memory DIMM1	**6**	Packet memory RX DIMM1
3	Packet memory TX DIMM0	**7**	PLU DIMM (not user serviceable)
4	Packet memory TX DIMM1	**8**	TLU DIMM (not user serviceable)

ISE Line Card Memory Locations

Figure 38 shows the small outline DIMM (SODIMM) socket locations on an ISE line card. This line card is equipped with 10 SODIMM sockets:

- Two route memory SODIMM sockets
- Four packet memory sockets (not user serviceable)
- Four TLU/PLU memory sockets (not user serviceable)

Figure 38 ISE Line Card Memory Locations

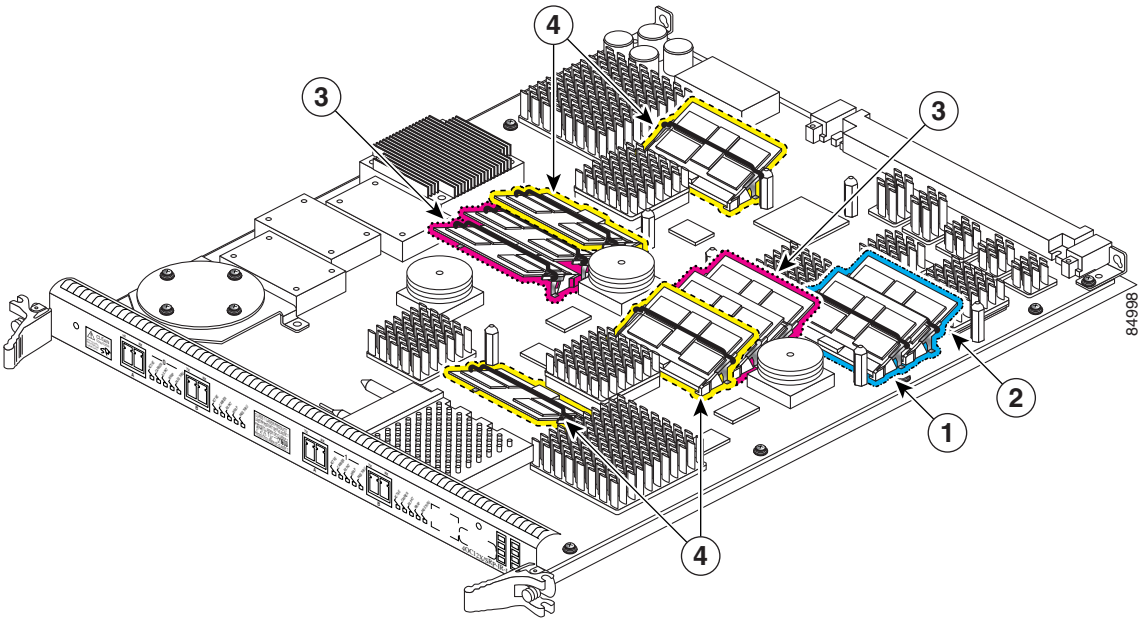

1	Route memory SODIMM0	**3**	Four packet memory SODIMM sockets (not field serviceable)
2	Route memory SODIMM1	**4**	Four TLU/PLU memory SODIMM sockets (not field serviceable)

Engine 4 Line Card Memory Locations

Figure 39 shows the DIMM socket locations on an Engine 4 line card. These line cards are equipped with five DIMM sockets:

- One route memory small-outline DIMM (SODIMM) socket
- Two pairs of packet memory DIMM sockets (not user serviceable)

The route memory module is installed to a 144-pin SODIMM socket. Route memory runs the Cisco IOS software image and stores the updated network routing tables downloaded from the route processor.

Figure 39 Engine 4 Line Card Memory Locations

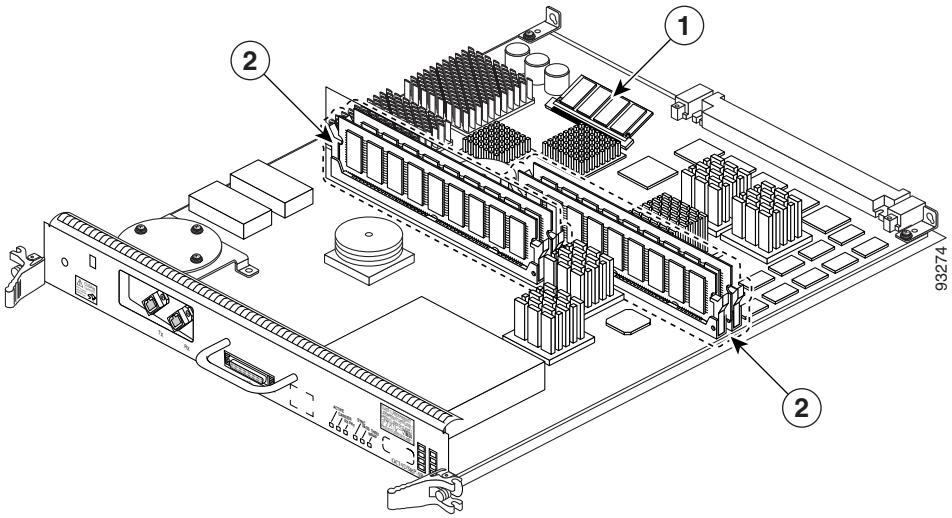

1	Route memory SODIMM	**2**	Packet memory DIMMs (not user serviceable)

DPT Line Card Route Memory Options

Route memory runs the Cisco IOS software image and stores updated network routing tables downloaded from the route processor (RP). Table 27 lists the available route memory configurations and associated product numbers of the memory modules used for upgrading route memory on DPT line cards.

Table 27 Route Memory Configurations for DPT Line Cards

Total Route Memory	Cisco Product Number	DIMM Module	Route Memory DIMM Sockets
64 MB	MEM-GRP/LC-64=[1]	1 64-MB DIMM	DIMM0 or DIMM1
128 MB	MEM-DFT-GRP/LC-128[2]	1 128-MB DIMM	DIMM0 or DIMM1
128 MB	MEM-GRP/LC-128=[3]	1 128-MB DIMM	DIMM0 or DIMM1
256 MB	MEM-GRP/LC-256=	2 128-MB DIMMs	DIMM0 and DIMM1
256 MB	MEM-LC4-256=[4]	1 256-MB SODIMM	Varies

1. This option adds a second 64-MB DIMM for a total of 128 MB for line cards that are equipped with 64 MB.
2. Default DIMM configuration for the 1-Port OC-12c/STM-4c and 1-Port OC-48c/STM-16c DPT line cards.
3. This option allows you to order a spare module or add a second 128-MB DIMM for a total of 256 MB for line cards that are already equipped with one 128-MB DIMM.
4. This option is only compatible with the 4-Port OC-48c/STM-4c and 1-Port OC-192c/STM-64c DPT line cards and is for replacement only.

DPT Line Card Packet Memory Options

Line card packet memory temporarily stores data packets awaiting switching decisions by the line card processor. Once the line card processor makes the switching decisions, the packets are propagated into the router switch fabric for transmission to the appropriate line card.

Caution The packet memory on the 4-Port OC-48c/STM-16c and the 1-Port OC-192c/STM-64c DPT line cards is not user serviceable. Do not attempt to remove or install these modules.

Table 28 lists the packet memory options for the 1-Port OC-12c/STM-4c and 1-Port OC-48c/STM-16c DPT line cards.

Table 28 1-Port OC-12c/STM-4c and 1-Port OC-48c/STM-16c DPT Line Card Packet Memory Options

Total Packet Memory[1]	Cisco Product Number	DIMM Modules	DIMM Sockets
256 MB	MEM-LC1-PKT-256=	2 RX 64-MB DIMMs 2 TX 64-MB DIMMs	RX DIMM0 and RX DIMM1 TX DIMM0 and TX DIMM1
512 MB (upgrade)	MEM-PKT-512-UPG=[2]	2 RX 128-MB DIMMs 2 TX 128-MB DIMMs	RX DIMM0 and RX DIMM1 TX DIMM0 and TX DIMM1

1. The DIMMs installed in a given buffer (either receive or transmit) must be the same type and size, but the individual receive and transmit buffers can operate with different memory capacities.
2. Only compatible with the 1-Port OC-48c/STM-16c DPT line card.

Removing and Installing Line Card Memory

Before beginning the memory replacement procedures in this section, ensure that you have the proper tools and equipment at hand, and that you are using appropriate ESD-prevention equipment and techniques. Before removing or installing memory, observe the following guidelines:

- Route memory DIMMs (1-Port OC-12c/STM-4c and 1-Port OC-48c/STM-16c line cards only)
  - Route memory DIMM0 socket must always be populated.
  - For certain memory configurations, the route memory DIMM1 socket can remain empty.
  - DIMMs must be 3.3V devices.
- Packet memory DIMMs (1-Port OC-12c/STM-4c and 1-Port OC-48c/STM-16c line cards only)
  - All four DIMM sockets for SDRAM buffer memory must be populated.

- Both DIMM sockets for a given buffer pair (either those for the transmit buffer or those for the receive buffer) must be populated with SDRAM DIMMs of the same type and size.
- Size of the DIMMs in the transmit buffer need not match the size of the SDRAM DIMMs in the receive buffer.
- DIMMs must be 3.3V devices.

This section contains the following procedures:

- Removing a DIMM
- Installing a DIMM
- Removing a SODIMM
- Installing a SODIMM
- Checking the Installation of Line Card Memory

Refer to Figure 36, Figure 37, Figure 38 and Figure 39 for the location of the memory on your line card.

Removing a DIMM

To remove a DIMM from a line card, follow these steps:

Step 1 Attach an ESD-preventive wrist or ankle strap and follow its instructions for use.

Step 2 Place the line card on an antistatic mat so that the faceplate is nearest to you.

Step 3 Locate the DIMM sockets on the line card.

Note Some line cards use DIMM sockets equipped with dual release levers, as shown in Figure 40; other line cards use DIMM sockets equipped with a single release lever, as shown in Figure 41. Both DIMM sockets operate in the same general way.

Figure 40 DIMM Socket with Dual Release Levers

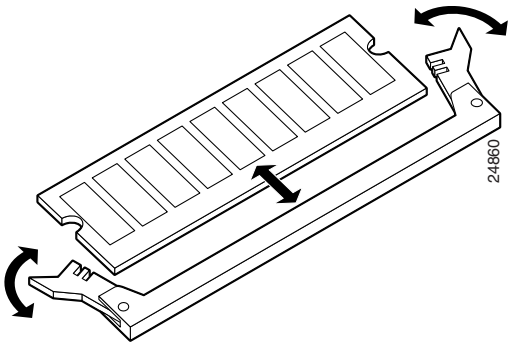

Figure 41 DIMM Socket with Single Release Lever

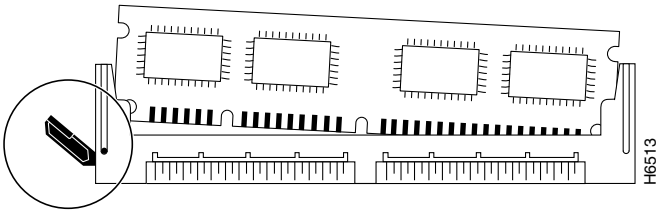

Step 4 Use the socket release levers to eject the DIMM.

- For a socket with dual release levers (see Figure 40), pull down both levers at the same time to eject the DIMM.

  or

- For a socket with a single release lever (see Figure 41), pull the lever to eject the DIMM.

Caution Handle the edges of the DIMM only. Do not touch the integrated circuit devices on the DIMM, the metal traces, or fingers, along the edge of the DIMM, or the pins in the DIMM socket.

Step 5 As one end of the DIMM is released, grasp the top corners of the DIMM with the thumb and forefinger of each hand and pull the DIMM completely out of its socket.

Step 6 Immediately place the DIMM in an antistatic bag to protect it from ESD damage.

Step 7 Repeat Step 4 through Step 6 for any remaining DIMMs that you want to remove.

Installing a DIMM

This section contains instructions for installing DIMM memory into a line card.

Note If you are upgrading packet memory, both DIMM sockets of a given pair (either the transmit buffer or the receive buffer) must be populated with a DIMM of the same type and size.

To install DIMMs in a line card, follow these steps:

Step 1 Attach an ESD-preventive wrist or ankle strap and follow its instructions for use.

Step 2 Place the line card on an antistatic mat so that the faceplate is nearest to you.

Caution To prevent router and memory problems, all DIMMs installed in the line card must be 3.3V devices.

Step 3 Remove the new DIMM from its protective antistatic bag.

Step 4 Grasp the edges of the DIMM only. Do not touch the integrated circuit devices on the DIMM, the metal traces, or fingers, along the edge of the DIMM, or the pins in the DIMM socket. (See Figure 42.)

Step 5 To position the DIMM for insertion, orient it at the same angle as the DIMM socket. The two notches (keys) on the bottom edge of the module ensure that the DIMM edge connector is registered properly in the socket. (See Figure 42.)

If necessary, rock the DIMM back and forth gently to align it in the socket.

Figure 42 Handling a DIMM

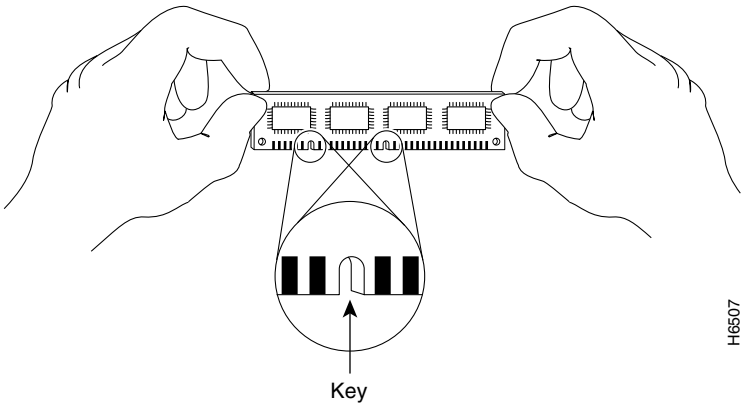

Caution When inserting DIMMs into a socket, apply firm, but not excessive, pressure. If you damage a DIMM socket, you must return the line card for repair.

Step 6 Gently insert the DIMM into the socket and push until the DIMM snaps into place and the release lever is flush against the side of the socket.

Step 7 Verify that the release lever is flush against the side of the socket. If it is not, the DIMM might not be seated properly. On a socket with dual release levers, both levers should be flush against the sides of the DIMM.

If the module appears misaligned, carefully remove it and reseat it, ensuring that the release lever is flush against the side of the DIMM socket.

Step 8 Repeat Step 3 through Step 7 to install any remaining DIMMs for your memory configuration.

Removing a SODIMM

To remove a SODIMM, follow these steps:

Step 1 Attach an ESD-preventive wrist or ankle strap and follow its instructions for use.

Step 2 Place the line card on an antistatic mat so that the faceplate is nearest to you.

Step 3 Locate the route memory socket on the line card.

Step 4 If present, remove the SODIMM retaining clip from the memory module socket. Grasp the latch arm intersection located on each side of the clip and gently slide the clip out. (See Figure 43.) Save the retaining clip.

Note Some line cards do not require a retaining clip.

Caution If the retaining clip is bent or damaged, do not attempt to fix or reuse it. This can cause serious damage to the line card. Each SODIMM replacement ships with a spare retaining clip, in case there is any damage to the existing clip.

Figure 43 Remove Retaining Clip from Memory Module Socket

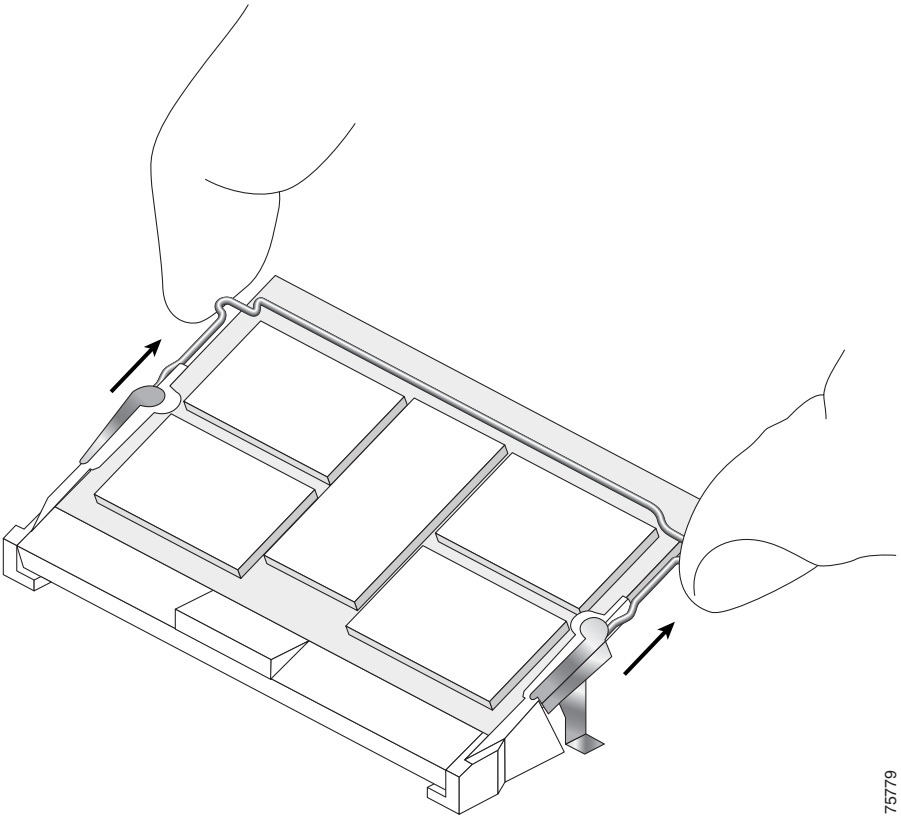

Step 5 Remove the SODIMM by gently moving the plastic latches in an outward direction, parallel to and away from the memory module, until it releases and rotates to a 45-degree angle. (See Figure 44 and Figure 45a.)

Caution The plastic latch on the SODIMM socket is enclosed by the metal strain-relief latch. The plastic latch should *never* be moved past the metal strain-relief latch.

Caution Handle the edges of the SODIMM only. Do not touch the integrated circuit devices on the SODIMM, the metal traces, or fingers, along the edge of the SODIMM, or the pins in the SODIMM socket.

Figure 44 Moving the Plastic Latch Away from the SODIMM

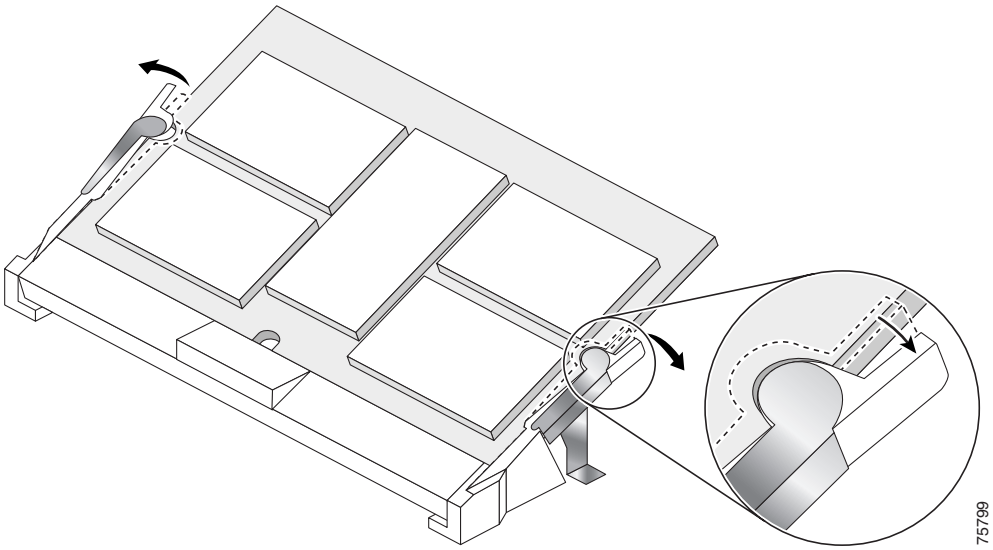

Step 6 As the SODIMM is released, it positions itself at a 45-degree angle. Gently pull the SODIMM module out of the socket. Continue to keep the module at a 45-degree angle until it is completely removed from the socket guides. (See Figure 45b.)

Figure 45 Removing a 144-pin SODIMM Module

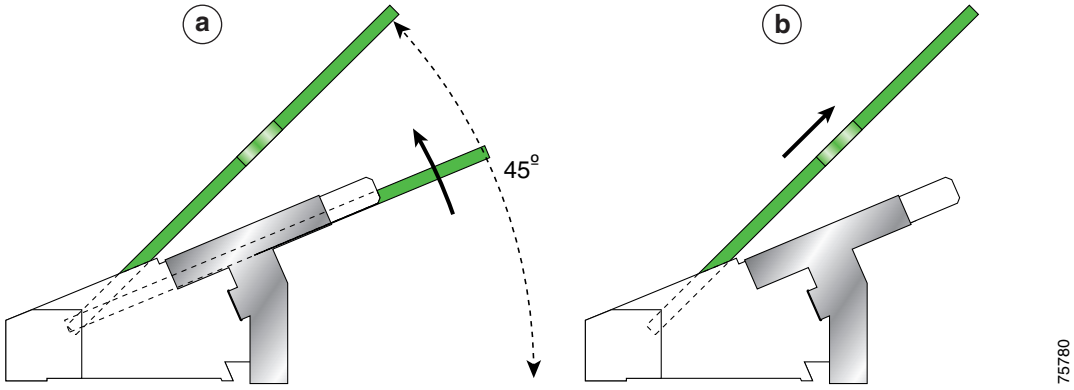

Step 7 Immediately place the SODIMM in an antistatic bag to protect it from ESD damage.

Installing a SODIMM

To install a SODIMM module, follow these steps:

Step 1 Attach an ESD-preventive wrist or ankle strap and follow its instructions for use.

Step 2 Place the line card on an antistatic mat so that the faceplate is nearest to you.

Step 3 If there is a retaining clip, check to make sure that it has not been damaged or bent. (See Figure 46.)

Note Some line cards do not require a retaining clip.

Figure 46 SODIMM Socket Retaining Clip

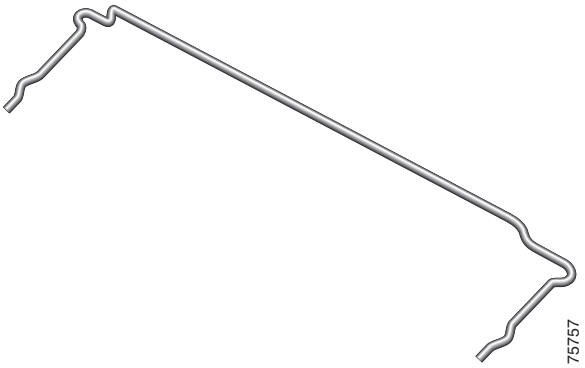

Caution If the retaining clip is damaged, do not use it. This can damage the SODIMM socket.

Step 4 Locate the route memory socket on the line card.

Step 5 Remove the new SODIMM from its protective antistatic bag.

Caution Grasp the edges of the SODIMM only. Do not touch the integrated circuit devices on the SODIMM, the metal traces, or fingers, along the edge of the SODIMM, or the pins in the SODIMM socket.

Step 6 Line up the SODIMM key with the key in the board socket. (See Figure 47.)

Figure 47 SODIMM with Key in Face-Up Position

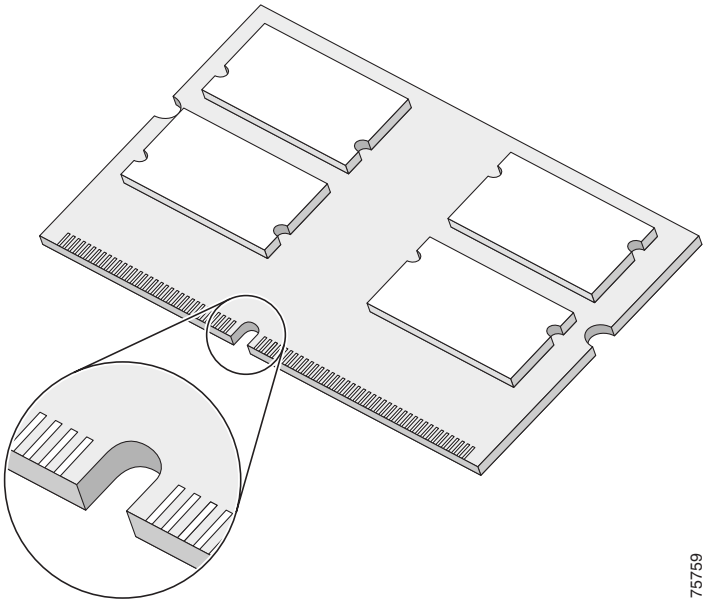

Step 7 The SODIMM must be lined up at a 45-degree angle. (See Figure 48a.)

Note When the key is in the face-up position, the metal traces on the left side of the key measure 0.9 inch (23.20 mm). The metal traces on the right side of the key measure 1.29 inches (32.80 mm). The SODIMM can not be inserted until the keys are lined up properly.

Step 8 Place both thumbs at the end of the socket and use your index fingers to guide the module into the socket until it is fully seated.

Be sure your index fingers are located on the outer corners of the SODIMM to maintain even pressure when the module is being seated in the socket.

Figure 48 Inserting a 144-pin SODIMM Module

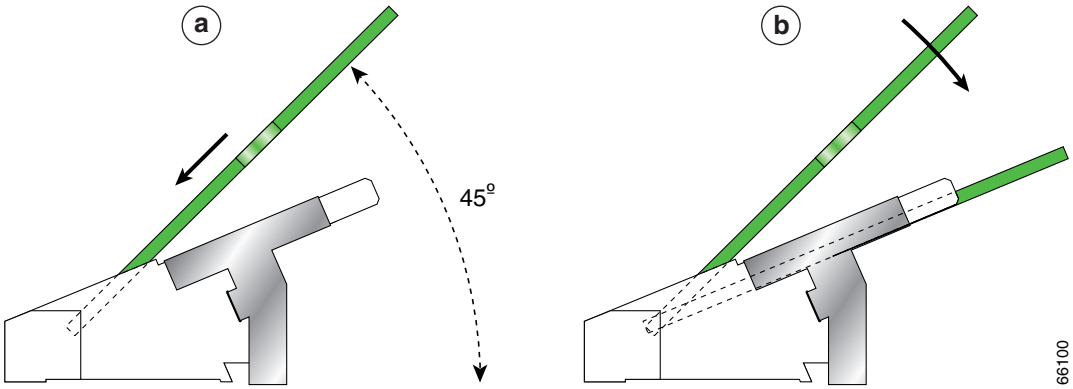

Step 9 Gently press the SODIMM down using your index fingers, distributing even pressure across the module until it locks into the tabs. (See Figure 48b.)

Caution Excessive pressure can damage a SODIMM socket.

Step 10 Verify that the release levers are flush against the side of the socket. If they are not, the SODIMM might not be seated properly.

Step 11 If the module appears misaligned, carefully remove it and reseat it, ensuring that the release lever is flush against the side of the SODIMM socket.

Step 12 If there is a retaining clip, insert it by sliding the clip between the metal strain relief and the plastic latch. (See Figure 49.)

Figure 49 Inserting the Retaining Clip

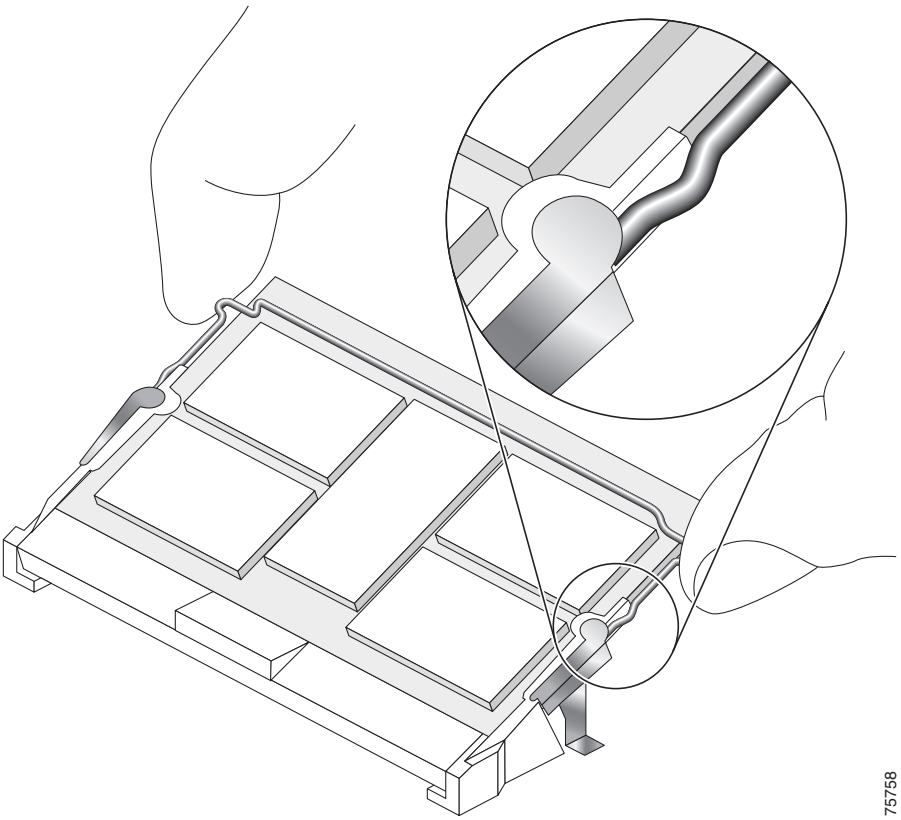

The clip is properly installed when the clip detente protrudes below the strain relief and plastic latch. (See Figure 50.)

Figure 50 Retaining Clip Completely Installed into Module Latch

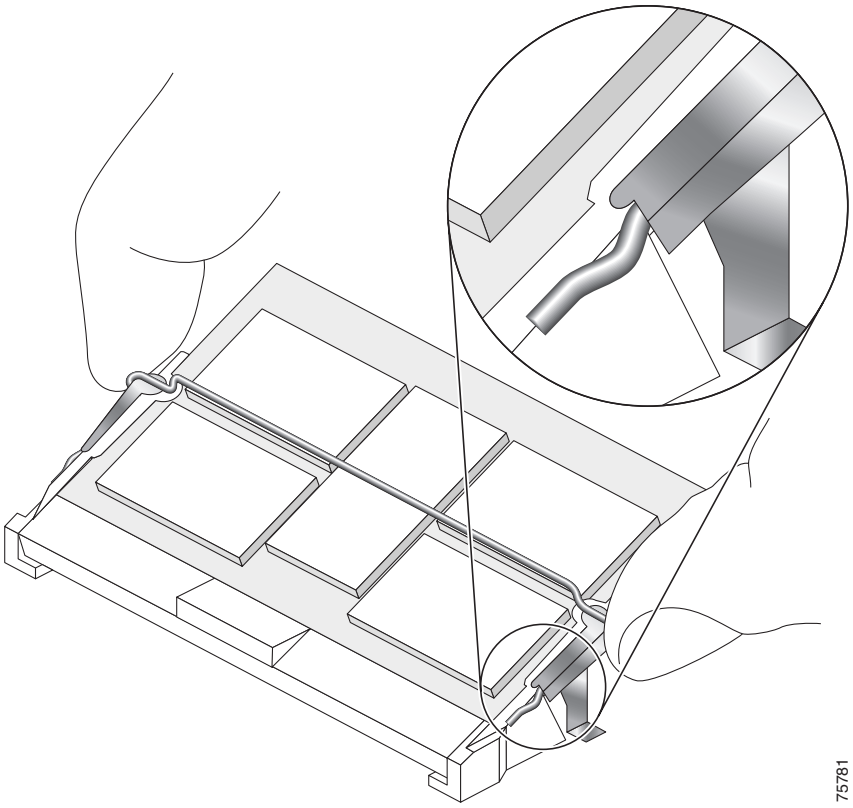

Checking the Installation of Line Card Memory

After you install line card memory and reinstall the line card in the router, the router reinitializes the line card and detects the memory change as part of the reinitialization cycle. The time required for the router to initialize can vary with different router configurations and memory configurations.

If the line card does not reinitialize properly after you upgrade memory, or if the console terminal displays a checksum or memory error, verify that you installed the correct DIMMs and that they are installed correctly on the line card.

To check the installation of line card memory, follow these steps:

Step 1 Check the packet memory DIMMs to verify that both DIMMs are the same type, size, and speed. DIMMs must operate at 60 ns or faster. The speed of the DIMM is printed along one of its edges.

Step 2 Check the alignment of the DIMMs by looking at them across the horizontal plane of the card. The DIMMs should be aligned at the same angle and be fully inserted into their respective sockets. If a DIMM is not correctly aligned, remove it and reinsert it.

Step 3 Reinstall the line card and perform another installation check.

If the router fails to restart properly after several attempts and you are unable to resolve the problem, access Cisco.com or contact your Cisco service representative for assistance. Before calling, however, make note of any console error messages, unusual LED states, or other router indications or behaviors that might help to resolve the problem.

Regulatory, Compliance, and Safety Information

This section includes regulatory, compliance, and safety information.

Translated Safety Warnings and Agency Approvals

The complete list of translated safety warnings and agency approvals is available in the *Regulatory Compliance and Safety Information for Cisco 12000 Series Internet Routers* publication. (Document Number 78-4347-xx.)

Electromagnetic Compatibility Regulatory Statements

FCC Class A Compliance

This equipment has been tested and found to comply with the limits for a Class A digital device, pursuant to part 15 of the FCC rules. These limits are designed to provide reasonable protection against harmful interference when the equipment is operated in a commercial environment. This equipment generates, uses, and can radiate radio-frequency energy and, if not installed and used in accordance with the instruction manual, may cause harmful interference to radio communications. Operation of this equipment in a residential area is likely to cause harmful interference, in which case users will be required to correct the interference at their own expense.

Modifying the equipment without Cisco's authorization may result in the equipment no longer complying with FCC requirements for Class A digital devices. In that event, your right to use the equipment may be limited by FCC regulation and you may be required to correct any interference to radio or television communication at your own expense.

You can determine whether your equipment is causing interference by turning it off. If the interference stops, it was probably caused by the Cisco equipment or one of its peripheral devices. If the equipment causes interference to radio or television reception, try to correct the interference by using one or more of the following measures:

- Turn the television or radio antenna until the interference stops.
- Move the equipment to one side or the other of the television or radio.
- Move the equipment farther away from the television or radio.
- Plug the equipment into an outlet that is on a different circuit from the television or radio. (That is, make certain the equipment and the television or radio are on circuits controlled by different circuit breakers or fuses.)

CISPR 22

This apparatus complies with CISPR 22/EN55022 Class B radiated and conducted emissions requirements.

Canada

English Statement of Compliance

This class A digital apparatus complies with Canadian ICES-003.

French Statement of Compliance

Cet appareil numérique de la classe A est conforme à la norme NMB-003 du Canada.

Europe (EU)

This apparatus complies with EN55022 Class B and EN55024 standards when used as ITE/TTE equipment, and EN300386 for Telecommunications Network Equipment (TNE) in both installation environments, telecommunication centers and other indoor locations.

Class A Notice for Hungary

Warning

This equipment is a class A product and should be used and installed properly according to the Hungarian EMC Class A requirements (MSZEN55022). Class A equipment is designed for typical commercial establishments for which special conditions of installation and protection distance are used.

Figyelem

Figyelmeztetés a felhasználói kézikönyv számára: Ez a berendezés "A" osztályú termék, felhasználására és üzembe helyezésére a magyar EMC "A" osztályú követelményeknek (MSZ EN 55022) megfeleloen kerülhet sor, illetve ezen "A" osztályú berendezések csak megfelelo kereskedelmi forrásból származhatnak, amelyek biztosítják a megfelelo speciális üzembe helyezési körülményeket és biztonságos üzemelési távolságok alkalmazását.

Class A Notice for Taiwan and Other Traditional Chinese Markets

Warning

This is a Class A Information Product, when used in residential environment, it may cause radio frequency interference, under such circumstances, the user may be requested to take appropriate countermeasures. Statement 257

警告 這是甲類資訊產品，在居住環境中使用時，可能會造成射頻干擾，
在這種情況下，使用者會被要求採取某些適當的對策。

VCCI Class A Notice for Japan

Warning

This is a Class A product based on the standard of the Voluntary Control Council for Interference by Information Technology Equipment (VCCI). If this equipment is used in a domestic environment, radio disturbance may arise. When such trouble occurs, the user may be required to take corrective actions. Statement 191

警告 これは、情報処理装置等電波障害自主規制協議会（VCCI）の規定に基づくクラスA 装置です。
この装置を家庭環境で使用すると、電波妨害を引き起こすことがあります。この場合には、
使用者が適切な対策を取るように要求されることがあります。

Class A Notice for Korea

Warning

This is a Class A Device and is registered for EMC requirements for industrial use. The seller or buyer should be aware of this. If this type was sold or purchased by mistake, it should be replaced with a residential-use type. Statement 294

주의 A급 기기 이 기기는 업무용으로 전자파 적합 등록을 한 기기이
오니 판매자 또는 사용자는 이 점을 주의하시기 바라며 만약
잘못 판매 또는 구입하였을 때에는 가정용으로 교환하시기 바랍니다.

Laser Safety

DPT line cards are equipped with a Class 1 laser (VSR is Class 1M), which emits invisible radiation. Do not stare into operational line card ports. The following laser warnings apply to DPT line cards:

- Class 1 Laser Product Warning
- Class 1M Laser Product Warnings (VSR Only)
- General Laser Warning
- LED Warning

Class 1 Laser Product Warning

The following warning applies to single-mode SR, IR, and LR optics:

Warning **Class 1 laser product.**

Class 1M Laser Product Warnings (VSR Only)

The following warnings apply to line cards with VSR optics:

Warning **Laser radiation. Do not view directly with optical instruments. Class 1M laser product.**

Warning **For diverging beams, viewing the laser output with certain optical instruments within a distance of 100 mm may pose an eye hazard. For collimated beams, viewing the laser output with certain optical instruments designed for use at a distance may pose an eye hazard.**

Warning **Class 1M laser radiation when open. Do not view directly with optical instruments.**

General Laser Warning

The following warning applies to all DPT line cards:

Warning **Invisible laser radiation can be emitted from the aperture of the port when no cable is connected. Avoid exposure to laser radiation and do not stare into open apertures.**

LED Warning

The following warning applies to the OC-12c/STM-4c multimode line card:

Warning **Class 1 LED product**

For translated safety warnings, refer to the *Regulatory Compliance and Safety Information for Cisco 12000 Series Internet Routers* publication (Document Number 78-4347-xx).

Obtaining Documentation

Cisco documentation and additional literature are available on Cisco.com. Cisco also provides several ways to obtain technical assistance and other technical resources. These sections explain how to obtain technical information from Cisco Systems.

Cisco.com

You can access the most current Cisco documentation on the World Wide Web at this URL:

http://www.cisco.com/univercd/home/home.htm

You can access the Cisco website at this URL:

http://www.cisco.com

International Cisco websites can be accessed from this URL:

http://www.cisco.com/public/countries_languages.shtml

Ordering Documentation

You can find instructions for ordering documentation at this URL:

http://www.cisco.com/univercd/cc/td/doc/es_inpck/pdi.htm

You can order Cisco documentation in these ways:

- Registered Cisco.com users (Cisco direct customers) can order Cisco product documentation from the Networking Products MarketPlace:

  http://www.cisco.com/en/US/partner/ordering/index.shtml

- Nonregistered Cisco.com users can order documentation through a local account representative by calling Cisco Systems Corporate Headquarters (California, USA) at 408 526-7208 or, elsewhere in North America, by calling 800 553-NETS (6387).

Documentation Feedback

You can submit e-mail comments about technical documentation to bug-doc@cisco.com.

You can submit comments by using the response card (if present) behind the front cover of your document or by writing to the following address:

Cisco Systems
Attn: Customer Document Ordering
170 West Tasman Drive
San Jose, CA 95134-9883

We appreciate your comments.

Obtaining Technical Assistance

For all customers, partners, resellers, and distributors who hold valid Cisco service contracts, the Cisco Technical Assistance Center (TAC) provides 24-hour-a-day, award-winning technical support services, online and over the phone. Cisco.com features the Cisco TAC website as an online starting point for technical assistance. If you do not hold a valid Cisco service contract, please contact your reseller.

Cisco TAC Website

The Cisco TAC website provides online documents and tools for troubleshooting and resolving technical issues with Cisco products and technologies. The Cisco TAC website is available 24 hours a day, 365 days a year. The Cisco TAC website is located at this URL:

http://www.cisco.com/tac

Accessing all the tools on the Cisco TAC website requires a Cisco.com user ID and password. If you have a valid service contract but do not have a login ID or password, register at this URL:

http://tools.cisco.com/RPF/register/register.do

Opening a TAC Case

Using the online TAC Case Open Tool is the fastest way to open P3 and P4 cases. (P3 and P4 cases are those in which your network is minimally impaired or for which you require product information.) After you describe your situation, the TAC Case Open Tool automatically recommends resources for an immediate solution. If your issue is not resolved using the recommended resources, your case will be assigned to a Cisco TAC engineer. The online TAC Case Open Tool is located at this URL:

http://www.cisco.com/tac/caseopen

For P1 or P2 cases (P1 and P2 cases are those in which your production network is down or severely degraded) or if you do not have Internet access, contact Cisco TAC by telephone. Cisco TAC engineers are assigned immediately to P1 and P2 cases to help keep your business operations running smoothly.

To open a case by telephone, use one of the following numbers:

Asia-Pacific: +61 2 8446 7411 (Australia: 1 800 805 227)
EMEA: +32 2 704 55 55
USA: 1 800 553-2447

For a complete listing of Cisco TAC contacts, go to this URL:

http://www.cisco.com/warp/public/687/Directory/DirTAC.shtml

TAC Case Priority Definitions

To ensure that all cases are reported in a standard format, Cisco has established case priority definitions.

Priority 1 (P1)—Your network is “down” or there is a critical impact to your business operations. You and Cisco will commit all necessary resources around the clock to resolve the situation.

Priority 2 (P2)—Operation of an existing network is severely degraded, or significant aspects of your business operation are negatively affected by inadequate performance of Cisco products. You and Cisco will commit full-time resources during normal business hours to resolve the situation.

Priority 3 (P3)—Operational performance of your network is impaired, but most business operations remain functional. You and Cisco will commit resources during normal business hours to restore service to satisfactory levels.

Priority 4 (P4)—You require information or assistance with Cisco product capabilities, installation, or configuration. There is little or no effect on your business operations.

Obtaining Additional Publications and Information

Information about Cisco products, technologies, and network solutions is available from various online and printed sources.

- Cisco Marketplace provides a variety of Cisco books, reference guides, and logo merchandise. Go to this URL to visit the company store:

  http://www.cisco.com/go/marketplace/

- The Cisco *Product Catalog* describes the networking products offered by Cisco Systems, as well as ordering and customer support services. Access the Cisco Product Catalog at this URL:

  http://cisco.com/univercd/cc/td/doc/pcat/

- *Cisco Press* publishes a wide range of general networking, training and certification titles. Both new and experienced users will benefit from these publications. For current Cisco Press titles and other information, go to Cisco Press online at this URL:

  http://www.ciscopress.com

- *Packet* magazine is the Cisco quarterly publication that provides the latest networking trends, technology breakthroughs, and Cisco products and solutions to help industry professionals get the most from their networking investment. Included are networking deployment and troubleshooting tips, configuration examples, customer case studies, tutorials and training, certification information, and links to numerous in-depth online resources. You can access Packet magazine at this URL:

  http://www.cisco.com/packet

- *iQ Magazine* is the Cisco bimonthly publication that delivers the latest information about Internet business strategies for executives. You can access iQ Magazine at this URL:

  http://www.cisco.com/go/iqmagazine

- *Internet Protocol Journal* is a quarterly journal published by Cisco Systems for engineering professionals involved in designing, developing, and operating public and private internets and intranets. You can access the Internet Protocol Journal at this URL:

  http://www.cisco.com/ipj

- Training—Cisco offers world-class networking training. Current offerings in network training are listed at this URL:

  http://www.cisco.com/en/US/learning/index.html

This document is to be used in conjunction with the installation and configuration guide for your Cisco 12000 Series Internet Router.