Mobile Ad Hoc Networks for Router-to-Radio Communications

First Published: May 17, 2007
Last Updated: June 29, 2007

Mobile Ad Hoc Networks (MANET) for router-to-radio communications address the challenges faced when merging IP routing and mobile radio communications in ad hoc networking applications. the Cisco solution for MANETs provides capabilities that enable

- Optimal route selection based on Layer 2 feedback from the radio network
- Faster convergence when nodes join and leave the network
- Efficient integration of point-to-point, directional radio topologies with multi hop routing
- Flow-controlled communications between each radio and its partner router

Through the router-to-radio link, the radio can inform the router immediately when a node joins or leaves, and this enables the router to recognize topology changes more quickly than if it had to rely on timers. Without this link-status notification from the radio, the router would likely time out while waiting for traffic. The link-status notification from the radio enables the router to respond faster to network topology changes. Metric information regarding the quality of a link is passed between the router and radio, enabling the router to more intelligently decide on which link to use.

With the link-status signaling provided by the router-to-radio link, applications such voice and video work better because outages caused by topology changes are reduced or eliminated. Sessions are more stable and remain active longer.

Key features of Cisco's mobile ad hoc networks for router-to-radio communications include the following:

Link Quality Metrics Reporting

The PPPoE protocol has been extended to enable a router or radio to query or report link-quality metric information. Cisco routers have been enhanced so that OSPFv3 or EIGRP routing protocols can factor link quality metrics into route cost calculations.

Neighbor Up or Down Signaling

Neighbor up or down signaling enables Cisco routers to use link establishment or termination signals from the radio to update routing topology.

Americas Headquarters:
Cisco Systems, Inc., 170 West Tasman Drive, San Jose, CA 95134-1706 USA

PPPoE Credit-based Flow Control

This extension to the PPPoE protocol allows a receiver to control the rate at which a sender can transmit data for each PPPoE session, so that the need for queuing in the radio is minimized.

Virtual Multipoint Interface (VMI)

This Cisco router enhancement maps multiple PPPoE sessions (each representing a point-to-point neighbor connection) into a single broadcast-capable, multi-access interface.

Finding Feature Information in This Module

Your Cisco IOS software release may not support all of the features documented in this module. To reach links to specific feature documentation in this module and to see a list of the releases in which each feature is supported, use the ""Commands Created or Modified for thie Feature." section on page 59.

Finding Support Information for Platforms and Cisco IOS and Catalyst OS Software Images

Use Cisco Feature Navigator to find information about platform support and Cisco IOS and Catalyst OS software image support. To access Cisco Feature Navigator, go to http://www.cisco.com/go/cfn. An account on Cisco.com is not required.

Contents

Prerequisites for Mobile Ad Hoc Networks for Router-to-Radio Communications

The features described in this document require one of the following router platforms:

- Cisco 2800 Series (2801, 2811, 2821, or 2851)
- Cisco 3250 and Cisco 3270
- Cisco 3800 Series (3825 or 3845)

To use the PPPoE and virtual multipoint interface (VMI) features described in this document, a radio device that implements the PPPoE functionality enhancements described in the draft RFC 2516 is required. Users can optionally implement draft-bberry-pppoe-credit-06.txt for *PPP Over Ethernet (PPPoE) Extensions for Credit Flow and Link Metrics*, but this draft must be implemented if you plan to use VMI features.

Restrictions for Mobile Ad Hoc Networks for Router-to-Radio Communications

VMI on Routed Ports

VMIs can be configured only on routed ports. VMIs are not supported on VLAN or switched ports.

Quality of Service

Of the Quality of Service (QoS) queueing features available from Cisco, only class-based Weighted Fair Queueing (WFQ) is supported on VMIs. The VMI can identify Differentiated Services Code Point (DSCP) values, and perform network-based application recognition (NBAR), but no policing or policy mapping occurs on those matches.

Information About Mobile Ad Hoc Networks for Router-to-Radio Communications

This section describes VMI PPPoE. The following sections are included:

Benefits of Router-to-Radio Links Using Virtual Multipoint Interfaces with PPPoE in Cisco IOS Software

As the global leader in mission-critical networking and IP communications, Cisco is uniquely positioned to deliver reliable and efficient converged voice, video, and data solutions to organizations around the world. Benefits of this technology include the following:

- Optimal route selection is based on Layer 2 feedback from the radio network.
- Efficient integration of point-to-point, directional radio topologies with multi hop routing.
- Convergence is faster when nodes join and leave the network because routers are able to respond faster to network topology changes.
- Flow-controlled communications between the radio and its partner router enables applications such voice and video to work better because outages caused by moving links are reduced or eliminated. Sessions are more stable and remain active longer.

MANETs for Router-to-Radio Communications

Mobile Ad Hoc Networks (MANETs) enable users deployed in areas with no fixed communications infrastructure to access critical voice, video, and data services. Soldiers in the field can employ unified communications, multimedia applications, and real-time information dissemination to improve situational awareness and respond quickly to changing battlefield conditions. Disaster managers can use video conferences, database access, and collaborative tools to coordinate multi-agency responses within an Incident Command System (ICS) framework. For event planners and trade show managers, MANETs represent a cost-effective way to accommodate mobile end users on a short term basis. MANETs set the stage for more timely information sharing and faster, more effective decision-making.

In MANET environments, highly mobile nodes communicate with each other across bandwidth-constrained radio links. An individual node includes both a radio and a network router, with the two devices interconnected over an Ethernet. Since these nodes can rapidly join or leave the network, MANET routing topologies are highly dynamic. Fast convergence in a MANET becomes a challenge because the state of a node can change well before the event is detected by the normal timing mechanisms of the routing protocol.

Radio link quality in a MANET can vary dramatically because it can be affected by a variety of factors such as noise, fading, interference, and power fluctuation. As a result, avoiding congestion and determining optimal routing paths also pose significant challenges for the router network. Finally, directional radios that operate on a narrow beam tend to model the network as a series of physical point-to-point connections with neighbor nodes. This point-to-point model does not translate gracefully to multi-hop, multipoint router environments, as it increases the size of each router's topology database and reduces routing efficiency.

Effective networking in a MANET environment therefore requires mechanisms by which

- routers and radios can interoperate efficiently, and without impacting operation of the radio network
- radio point-to-point and router point-to-multipoint paradigms can be rationalized
- radios can report status to routers for each link and each neighbor, and
- routers can use this information to optimize routing decisions.

PPPoE Interfaces for Mobile Radio Communications

The Cisco MANET solution employs PPP-over-Ethernet (PPPoE) sessions to enable intra-nodal communications between a router and its partner radio. Each radio initiates the PPPoE session as soon as the radio establishes a radio link to another radio. After the PPPoE sessions are active, a PPP session is established end-to-end (router-to-router); This is duplicated each time a radio establishes a new radio link. The Virtual Multipoint Interface (VMI) on the router aggregates multiple PPPoE sessions and multiplexes these to look like a single interface to the routing processes. This interface collects the series of PPP/PPPoE connections. Underneath the VMI interface there are virtual access interfaces that are associated with each of the PPP/PPPoE connections.

A PPPoE session is established between a router and a radio on behalf of every other router/radio neighbor located in the MANET. These Layer 2 sessions are the means by which radio network status gets reported to the Layer 3 processes in the router. Figure 1 illustrates the PPPoE session exchange between mobile routers and directional radios in a MANET network.

Figure 1 PPPoE Session Exchange Between Mobile Routers and Directional Radios

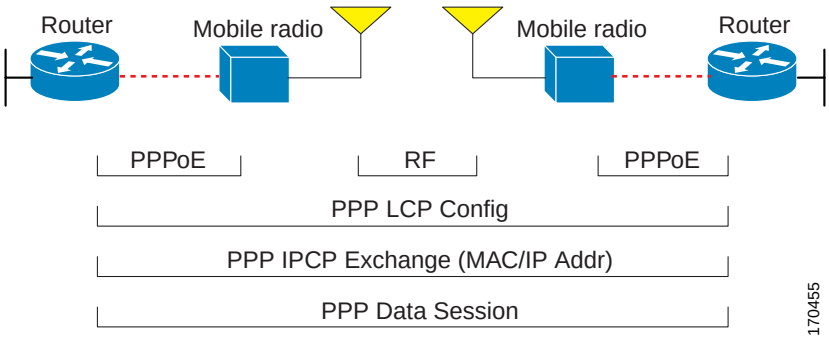

This capability assumes that a PPPoE-equipped radio connects to a router using Ethernet. The router always considers the Ethernet link to be up. If the radio side of the link goes down, the router will wait until a routing update time-out has occurred to declare the route down and then update the routing table. Figure 2 illustrates a simple router-to-radio link topology.

Figure 2 Router-to-Radio Link

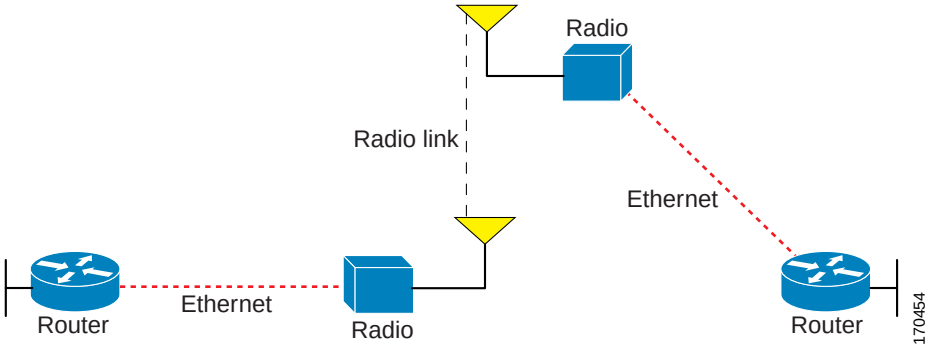

Routing protocols used for VMI PPPoE are EIGRP (IPv4, IPv6) and OSPFv3 (IPv6).

Virtual Multipoint Interface

The VMI interface provides services that map outgoing packets to the appropriate PPPoE sessions based on the next-hop forwarding address for that packet. The VMI interface also provides a broadcast service that emulates a set of point-to-point connections as a point-to-multipoint interface with broadcast ability. When a packet with a multicast address is forwarded through the VMI interface, VMI replicates the packet and unicasts it to each of its neighbors.

Directional radios are frequently used in applications that require greater bandwidth, increased power-to-transmission range, or reduced probability of detection. These radios operate in a point-to-point mode, and generally have no broadcast capability. On the other hand, the routing processes in Cisco's MANET solution operate most efficiently when viewing the network link as point-to-multipoint, with broadcast capability. For the router, modeling the MANET as a collection of point-to-point nodes would have a dramatic impact on the size of its internal database.

The Virtual Multipoint Interface (VMI) within the router aggregates all of the per-neighbor PPPoE sessions from the Radio Ethernet connection. The VMI maps the sessions to appear to Layer 3 routing protocols and applications as a single point-to-multipoint, multi-access, broadcast-capable network. However, the VMI preserves the integrity of the PPPoE sessions on the radio side, so that each point-to-point connection can have its own Quality of Service (QoS) queue.

The VMI also relays the link quality metric and neighbor up/down signaling from the radio to the routing protocols. Currently, VMI signals are used by EIGRP (for IPv4 and IPv6 neighbors) and OSPFv3 (for IPv6 neighbors).

Link Quality Metrics Reporting for OSPFv3 and EIGRP with VMI Interfaces

The quality of a radio link has a direct impact on the throughput that can be achieved by router-router traffic. The PPPoE protocol has been extended to provide a process by which a router can request, or a radio can report, link quality metric information. Cisco's OSFPv3 and EIGRP implementations have been enhanced so that the route cost to a neighbor is dynamically updated based on metrics reported by the radio, thus allowing the best route to be chosen within a given set of radio links.

The routing protocols receive raw radio link data, and compute a composite quality metric for each link. In computing these metrics, the following factors may be considered:

- Maximum Data Rate – the theoretical maximum data rate of the radio link, in bytes per second
- Current Data Rate – the current data rate achieved on the link, in bytes per second
- Latency – the transmission delay packets encounter, in milliseconds
- Resources – a percentage (0-100) that can represent the remaining amount of a resource (such as battery power)
- Relative Link Quality – a numeric value (0-100) representing relative quality, with 100 being the highest quality

Metrics can be weighted during the configuration process to emphasize or de-emphasize particular characteristics. For example, if throughput is a particular concern, the *current data rate* metric could be weighted so that it is factored more heavily into the composite metric. Similarly, a metric that is of no concern can be omitted from the composite calculation.

Link metrics can change rapidly, often by very small degrees, which could result in a flood of meaningless routing updates. In a worst case scenario, the network would be churning almost continuously as it struggled to react to minor variations in link quality. To alleviate this concern, Cisco provides a tunable dampening mechanism that allows the user to configure threshold values. Any metric change that falls below the threshold is ignored.The quality of a connection to a neighbor varies, based on various characteristics of the interface when OSPF or EIGRP is used as the routing protocol. The routing protocol receives dynamic raw radio link characteristics and computes a composite metric that is used to reduce the effect of frequent routing changes.

A tunable hysteresis mechanism allows users to adjust the threshold to the routing changes that occur when the router receives a signal that a new peer has been discovered, or that an existing peer is unreachable. The tunable metric is weighted and is adjusted dynamically to account for the following characteristics:

- Current and Maximum Bandwidth
- Latency
- Resources
- Hysteresis

Individual weights can be deconfigured and all weights can be cleared so that the cost is set back to the default value for the interface type. Based on the routing changes that occur, cost can be determined by the application of these metrics. The following sections provide more details about OSPF and EIGRP metrics:

- OSPF Cost Calculation for VMI Interfaces, page 7
- EIGRP Cost Metrics for VMI Interfaces, page 9
- VMI Metric to EIGRP Metric Conversion, page 10
- Dynamic Cost Metric for VMI Interfaces, page 11
- EIGRP Metric Dampening for VMI Interfaces, page 12

OSPF Cost Calculation for VMI Interfaces

Because cost components can change rapidly, it might be necessary to dampen the volume of changes to reduce network-wide churn. The recommended values for S2, S3, and S4 are based on network simulations that may reduce the rate of network changes. The recommended value for S1 is zero to eliminate this variable from the route cost calculation.

The overall link cost is computed using the following formula:

$$LinkCost = OC + BW\left(\frac{Throughput\_weight}{100}\right) + Resources\left(\frac{Resources\_weight}{100}\right) + Latency\left(\frac{Latency\_weight}{100}\right) + L2\_factor\left(\frac{L2\_weight}{100}\right)$$

$$OC = \left[\frac{(ospf\_reference\_bw)(1x10^{8})}{(MDR)(1024)}\right]$$

Note: The default ospf reference bw is 100

$$BW = \frac{(65535+1)\left(100 - \frac{CDR}{MDR}(100)\right)}{100}$$

$$Resources = \frac{(100 - resources)(65536)}{100}$$

$$Latency = latency$$

$$L2\_factor = \frac{(100 - RLQ)(65535+1)}{100}$$

231048

Table 1 defines the symbols used in the OSPF cost calculation.

Table 1 OSPF Cost Calculation Definitions

Cost Component	Component Definition
OC	The "default OSPF Cost". Calculated from reference bandwidth using reference_bw / (MDR*1000) where reference_bw=10^8
A through D	Various radio-specific data based formula's which produce result in range 0-64k

Table 1 OSPF Cost Calculation Definitions

Cost Component	Component Definition
A	CDR and MDR related formula (2^16 * (100 - (CDR * 100 / MDR)))/100
B	Resources related formula ((100 - RESOURCES)^3 * 2^16 / 10^6)
C	Latency as reported by the radio (already in the 0-64K range when reported (LATENCY)
D	RLF related formula ((100 - RLF) * 2^16)/100
S1 through S4	Scalar weighting factors input from CLI. These scalars scale DOWN the values as computed by A-D. The value of 0 disables and value of 100 enables full 0-64k range for one component.

While each network might have unique characteristics that require different settings to optimize actual network performance, these are recommended values intended as a starting point for optimizing a OSPFv3 network. Table 2 lists the recommended value settings for OSPF cost metrics.

Table 2 Recommended Value Settings for OSPF Cost Metrics

Setting	Metric Description	Default Value	Recommended Value
S1	ipv6 ospf dynamic weight throughout	100	0
S2	ipv6 ospf dynamic weight resources	100	29
S3	ipv6 ospf dynamic weight latency	100	29
S4	ipv6 ospf dynamic weight L2 factor	100	29

Using this formula, the default path costs were calculated as noted in the following list. If these values do not suit your network, you can use your own method of calculating path costs.

- 56-kbps serial link—Default cost is 1785.
- 64-kbps serial link—Default cost is 1562.
- T1 (1.544-Mbps serial link)—Default cost is 64.
- E1 (2.048-Mbps serial link)—Default cost is 48.
- 4-Mbps Token Ring—Default cost is 25.
- Ethernet—Default cost is 10.
- 16-Mbps Token Ring—Default cost is 6.
- FDDI—Default cost is 1.
- X25—Default cost is 5208.
- Asynchronous—Default cost is 10,000.
- ATM— Default cost is 1.

To illustrate these settings, the following example shows how OSPF cost metrics might be defined for a VMI interface:

```
interface vmi1
 ipv6 ospf cost dynamic weight throughput 0
 ipv6 ospf cost dynamic weight resources 29
 ipv6 ospf cost dynamic weight latency 29
 ipv6 ospf cost dynamic weight L2-factor 29
```

EIGRP Cost Metrics for VMI Interfaces

When EIGRP is used as the routing protocol, metrics allow EIGRP to respond to routing changes. The link-state metric is advertised as the link cost in the router link advertisement.The reply sent to any routing query will always contain the latest metric information. Exceptions which will result in immediate update being sent:

- A down interface
- A down route
- Any change in metric which results in the router selecting a new next hop

EIGRP receives dynamic raw radio link characteristics and computes a composite EIGRP metric based on a proprietary formula. To avoid churn in the network as a result of the change in the link characteristics, a tunable dampening mechanism is used.

EIGRP uses the metric weights along with a set of vector metrics to compute the composite metric for local RIB installation and route selections. The EIGRP composite metric is calculated using the formula:

EIGRP Metric = 256*((K1*Bw) + (K2*Bw)/(256-Load) + (K3*Delay)*(K5/(Reliability + K4)))

Table 3 lists the EIGRP vector metrics and their descriptions.

Table 3 EIGRP Vector Metrics

Vector Metric	Description
bandwidth	Minimum bandwidth of the route in kilobits per second. It can be 0 or any positive integer. The bandwidth for the formula is scaled and inverted by the following formula: (**10^7/minimum Bw in kilobits per second**)
delay	Route delay in tens of microseconds.
delay reliability	Likelihood of successful packet transmission expressed as a number between 0 and 255. The value 255 means 100 percent reliability; 0 means no reliability.
load	Effective load of the route expressed as a number from 0 to 255 (255 is 100 percent loading).
mtu	Minimum maximum transmission unit (MTU) size of the route in bytes. It can be 0 or any positive integer.

EIGRP monitors metric weights on an interface to allow for the tuning of EIGRP metric calculations and indicate type of service (TOS). Table 4 lists the K-values and their default.

Table 4 EIGRP K-Value Defaults

Setting	Default Value
K1	1
K2	0
K3	1
K4	0
K5	0

Most configurations use the first two metrics –delay and bandwidth, with bandwidth taking precedence. The default formula of 256*(BW +Delay) is the EIGRP metric. The bandwidth for the formula is scaled and inverted by the following formula:

(**10^7/minimum Bw in kilobits per second**)

Note You can change the weights (as with IGRP), but these weights must be the same on all the routers.

For example, look at an IGRP link whose bandwidth to a particular destination is 128k and the delay is 84000 microseconds.

Using the cut-down formula, the EIGRP metric calculation would simplify to 256*(BW + Delay), resulting in the following value:

Metric = 256*(10^7/128 + 84000/10)= 256*86525 = 22150400

To calculate route delay, divide the delay value by 10 to get the true value in tenths of microseconds

When calcluating the delay for MANET and the delay is obtained from a router interface, it is always calculated in tens of microseconds. In most cases, when using MANET, you will not use the interface delay, but rather the delay that is advertised by the radio. The delay you will receive from the radio is in microseconds, so you must adjust the cut-down formula as follows:

Metric = (256*(10^7/128) + (84000*256)/10) = 20000000 + 2150400 = 22150400

VMI Metric to EIGRP Metric Conversion

The quality of connection to a VMI neighbor will vary based on various characteristics computed dynamically based on the feedback from L2 to L3. Table 5 lists the EIGRP metrics and their significance.

Table 5 EIGRP MANET Metrics for VMI Interfaces

Metric	Significance
current data rate	Snapshot value of bytes per second rate on the link
max data rate	Bytes per second maximum rate on link
latency	Average delay on the link, specified in ms
resources	A representation of resources indicating a percentage (0-100), such as, battery power. Harris implementation always reports 100
relative link quality	opaque number (0-100) representing radio's view of link quality 0 represents the worst possible link, 100 represents the best.

These EIGRP vector metric values map to the basic EIGRP interface parameters as indicated in Table 6

Table 6 Mapping of VMI Metric Values to EIGRP Vector Metrics Values

VMI Metric	EIGRP Metric	Mapping
current data rate	Bandwidth	Used directly and is converted to kilobits.
relative link quality resources	Reliability	Calculated according to the following formula: if resources < 30% (255 * ((relative link quality + resources)/2) / 100 else (255 * relative link quality) / 100
max data rate relative link quality	Delay	Calculated according to the following formula: **calc_delay**(maximum_data_rate) * 100 / relative link quality) / USEC_TO_MSEC. The value used for USEC_TO_MSEC is 1000.
load	Load	Calculated according to the following formula: 255 – ((255 * load) / 100)

Note If the current data rate = 0; then (current data rate / max data rate) is defined to be 1.

Dynamic Cost Metric for VMI Interfaces

The dynamic cost metric used for interfaces is computed based on the Layer 2 (L2) feedback to Layer 3 (L3). The dynamic cost is calculated using the following formula:

L2L3API

Where the metric calculations are

S1 = ipv6 ospf dynamic weight throughput
S2 = ipv6 ospf dynamic weight resources
S3 = ipv6 ospf dynamic weight latency
S4 = ipv6 ospf dynamic weight L2 factor
OC = standard cost of a non-VMI route

Throughput = (current-data-rate)/(maximum-data-rate)

Router-dynamic cost= OC + (S1) + (S2) + (S3) + (S4)

For a dynamic cost to have the same cost as a default cost, all parameters must equal zero.

Each Layer 2 feedback can contribute a cost in the range of 0 to 65535. To tune down this cost range, use the optional **weight** keyword in conjunction with the **throughput**, **resources**, **latency**, or **L2-factor** keyword. Each of these weights has a default value of 100% and can be configured in the range from 0 to 100. When 0 is configured for a specific weight, that weight does not contribute to the Open Shortest Path First (OSPF) cost.

Because cost components can change rapidly, you may need to dampen the amount of changes in order to reduce network-wide churn. Use the optional **hysteresis** keyword with the **threshold** *threshold-value* keyword and argument to set a cost change threshold. Any cost change below this threshold is ignored

EIGRP Metric Dampening for VMI Interfaces

Because metric components could be changing rapidly, the frequency of the changes can have an impact on the network. Frequent changes require that prefixes learned though the VMI interface be updated and sent to all adjacencies. This update can result in further updates and, in a worst-case scenario, cause network-wide churn. To prevent such effects, metrics can be dampened, or thresholds set, so that any change that does not exceed the dampening threshold is ignored.

Network changes that cause an immediate update include

- a down interface
- a down route
- any change in a metric which results in the router selecting a new nexthop

Dampening the metric changes can be configured based on change or time intervals.

If the dampening method is change-based, changes in routes learned though a specific interface, or in the metrics for a specific interface, will not be advertised to adjacencies until the computed metric changes from the last advertised value significantly enough to cause an update to be sent.

If this dampening method is interval-based, changes in routes learned though a specific interface, or in the metrics for a specific interface, will not be advertised to adjacencies until the specified interval is met, unless the change results in a new route path selection.

When the timer expires, any routes, which have outstanding changes to report, will be sent out. If a route changes, such that the final metric of the route matches the last updated metric, no update will be sent.

Neighbor Up/Down Signaling for OSFPv3 and EIGRP

MANETs are highly dynamic environments. Nodes may move into, or out of, radio range at a fast pace. Each time a node joins or leaves, of course, the network topology must be logically reconstructed by the routers. Routing protocols normally use timer-driven “hello” messages or neighbor timeouts to track topology changes, but for MANETs reliance on these mechanisms can result in unacceptably slow convergence.

This signaling capability provides faster network convergence by using link-status signals generated by the radio. The radio notifies the router each time a link to another neighbor is established or terminated by the creation and termination of PPPoE sessions. In the router, the routing protocols (OSPFv3 or EIGRP) respond immediately to these signals by expediting formation of a new adjacency (for a new neighbor) or tearing down an existing adjacency (if a neighbor is lost). For example, if a vehicle drives behind a building and loses its connection, the router will immediately sense the loss and establish a new route to the vehicle through neighbors that are not blocked. This high speed network convergence is essential for minimizing dropped voice calls and disruptions to video sessions.

When VMI with PPPoE is used and a partner node has left or a new one has joined, the radio informs the router immediately of the topology change. Upon receiving the signal, the router immediately declares the change and updates the routing tables.

The signaling capability reduces routing delays and prevents applications from timing out; enables network-based applications and information to be delivered reliably and quickly over directional radio links; provides faster convergence and optimal route selection so that delay-sensitive traffic such as

voice and video are not disrupted; and reduces impact on radio equipment by minimizing the need for internal queuing/buffering; also provides consistent Quality of Service for networks with multiple radios.

The messaging allows for flexible rerouting when necessary because of

- Noise on the Radio links
- Fading of the Radio links
- Congestion of the Radio links
- Radio link power fade
- Utilization of the Radio

Figure 3 illustrates the signaling sequence that occurs when radio links go up and down.

Figure 3 Up and Down Signaling Sequence

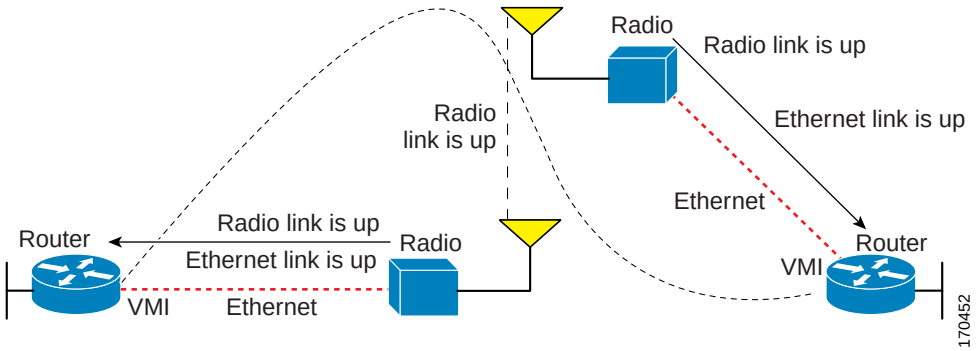

PPPoE Credit-based Flow Control

Each radio initiates a PPPoE session with its local router as soon as the radio establishes a link to another radio. Once the PPPoE sessions are active for each node, a PPP session is then established end-to-end (router-to-router). This process is duplicated each time a radio establishes a new link.

The carrying capacity of each radio link may vary due to location changes or environmental conditions, and many radio transmission systems have limited buffering capabilities. To minimize the need for packet queuing in the radio, Cisco has implemented extensions to the PPPoE protocol that enable the router to control traffic buffering in congestion situations. Implementing flow-control on these router-to-radio sessions also will allow use of quality of service features such as fair queuing.

The solution utilizes a credit-granting mechanism documented in an IETF informational draft. When the PPPoE session is established, the radio can request a flow-controlled session. If the router acknowledges the request, all subsequent traffic must be flow-controlled. If a flow control session has been requested and cannot be supported by the router, the session is terminated. Typically, both the radio and the router initially grant credits during session discovery. Once a device exhausts its credits, it must stop sending until additional credits have been granted. Credits can be added incrementally over the course of a session.

IPv6 Addresses

You can configure VMI interfaces with IPv6 addresses only, IPv4 addresses only, or both IPv4 and IPv6 addresses.

IPv6 addresses are assigned to individual router interfaces and enable the forwarding of IPv6 traffic globally on the router. By default, IPv6 addresses are not configured and IPv6 routing is disabled.

Note The *ipv6-address* argument in the **ipv6 address** command must be in the form documented in RFC 2373 where the address is specified in hexadecimal using 16-bit values between colons.

The */prefix-length* argument in the **ipv6 address** command is a decimal value that indicates how many of the high-order contiguous bits of the address comprise the prefix (the network portion of the address) A slash mark must precede the decimal value.

Restrictions for IPv6 Addressing

In Cisco IOS Release 12.2(4)T or later releases, Cisco IOS Release 12.0(21)ST, and Cisco IOS Release 12.0(22)S or later releases, the **ipv6 address** or **ipv6 address eui-64** command can be used to configure multiple IPv6 global addresses within the same prefix on an interface. Multiple IPv6 link-local addresses on an interface are not supported.

Prior to Cisco IOS Releases 12.2(4)T, 12.0(21)ST, and 12.0(22)S, the Cisco IOS command-line interface (CLI) displays the following error message when multiple IPv6 addresses within the same prefix on an interface are configured as:

```
Prefix <prefix-number> already assigned to <interface-type>
```

For additional information about IPv6 addressing, see *Implementing IPv6 Addressing in the Cisco IOS IPv6 Configuration Guide* at the following URL:

http://www.cisco.com/en/US/products/ps6441/products_configuration_guide_chapter09186a00806f3a6a.html

Multicast Support for VMI Interfaces

VMI interfaces operate, by default, in aggregate mode, which means that all of the virtual-access interfaces created by PPPoE sessions are logically aggregated under the configured VMI. That is, applications above Layer 2, such as, EIGRP and OSPFv3, should be defined on the VMI interface only. Packets sent to the VMI interface will be correctly forwarded to the correct virtual-access interface(s).

If you are running multicast applications that require the virtual-access interfaces to be exposed to applications above Layer 2 directly, you can configure the VMI to operate in bypass mode. Most multicast applications require that the virtual-access interfaces be exposed directly to the routing protocols to insure that that multicast Reverse Path Forwarding (RPF) can operate as expected. When you use the bypass mode, you must define a VMI interface to handle presentation of cross-layer signals such as, neighbor up, neighbor down, and metrics. Applications will be aware of the actual underlying virtual-access interfaces, and will send packets to them directly. Additional information is required on the virtual template configuration. Operating the VMI in bypass mode can cause databases in the applications to be larger than would normally be expected because knowledge of more interfaces is required for normal operation.

After configuring the bypass mode, Cisco recommends that you save the running configuration to NVRAM to override the default mode of operation for VMI to logically aggregate the virtual-access interfaces..

How to Configure Router-to-Radio Links Using VMI PPPoE

This section identifies the tasks that will be used to configure VMI PPPoE. Configuring the VMI PPPoE involves implementing the infrastructure, establishing the IPv4 and IPv6 addressing schemes, and configuring the routing environment. This document contains configuration guidelines only for configuration of PPPoE as it relates to VMIs. For details about configuring PPPoE, refer to the *Cisco IOS Broadband and DSL Configuration Guide*. For details about PPPoE commands, refer to the *Cisco IOS Broadband and DSL Command Reference*.

The following sections are included:

- Implementing the VMI Infrastructure Using PPPoE, page 15
- Configuration Examples for VMI PPPoE, page 36

Implementing the VMI Infrastructure Using PPPoE

The PPPoE protocol provides the transport for the mobile network. The following tasks are required to configure PPPoE to support the VMI.

- Creating a Subscriber Profile for PPPoE Service Selection, page 15 (Required)
- Configuring the PPPoE Profile for PPPoE Service Selection, page 16 (Required)
- Configuring PPPoE on an Ethernet Interface, page 18 (Required)

Creating a Subscriber Profile for PPPoE Service Selection

Perform this task to configure a subscriber profile for PPPoE service selection.

SUMMARY STEPS

1. **enable**
2. **configure terminal**
3. **subscriber profile** *profile-name*
4. **pppoe service manet_radio**
5. **subscriber authorization enable**
6. **exit**

DETAILED STEPS

	Command or Action	Purpose
Step 1	**`enable`** **Example:** `Router> enable`	Enables privileged EXEC mode. • Enter your password if prompted.
Step 2	**`configure terminal`** **Example:** `Router# configure terminal`	Enters global configuration mode.
Step 3	**`subscriber profile`** *`profile-name`* **Example:** `Router(config)# subscriber profile manet`	Enters Subscriber Profile configuration mode.
Step 4	**`pppoe service manet_radio`** **Example:** `Router(config-sss-profile)# pppoe service manet_radio`	Adds a PPPoE MANET radio service name to a subscriber profile to enable the use of the VMI interface.
Step 5	**`subscriber authorization enable`** **Example:** `Router(config-sss-profile)# subscriber authorization enable`	Enable Subscriber Service Switch type authorization. This command is required when VPDN is not used.
Step 6	**`exit`** **Example:** `Router(config-sss-profile)# exit`	Returns to global configuration mode.

What to Do Next

After you have defined the PPPoE subscriber profile and service, you must apply the definitions to a BBA group

Configuring the PPPoE Profile for PPPoE Service Selection

Perform this task to associate a subscriber profile with a PPPoE profile. In this configuration, the BBA group name should match the subscriber profile name previously defined in the subscriber profile. In this case, the profile name used as the service name is *manet_radio*.

SUMMARY STEPS

1. **enable**
2. **configure terminal**
3. **bba-group pppoe** {*group-name* | **global**}

4. **virtual-template** *template-number*
5. **service profile** *subscriber-profile-name* [**refresh** *minutes*]
6. **end**

DETAILED STEPS

	Command or Action	Purpose
Step 1	**enable** **Example:** `Router> enable`	Enables privileged EXEC mode. • Enter your password if prompted.
Step 2	**configure terminal** **Example:** `Router# configure terminal`	Enters global configuration mode.
Step 3	**bba-group pppoe** {*group-name* | **global**} **Example:** `Router(config)# bba-group pppoe group1`	Defines a PPPoE profile and enters BBA group configuration mode. • The **global** keyword creates a profile that will serve as the default profile for any PPPoE port that is not assigned a specific profile.
Step 4	**virtual-template** *template-number* **Example:** `Router(config-bba-group)# virtual-template 1`	Specifies which virtual template will be used to clone virtual access interfaces for all PPPoE ports that use this PPPoE profile.
Step 5	**service profile** *subscriber-profile-name* [**refresh** *minutes*] **Example:** `Router(config-bba-group)# service profile subscriber-group1`	Assigns a subscriber profile to a PPPoE profile. • The PPPoE server will advertise the service names that are listed in the subscriber profile to each PPPoE client connection that uses the configured PPPoE profile. • The PPPoE configuration that is derived from the subscriber gold_isp_A under the PPPoE profile. Use the **service profile** command with the **refresh** keyword and the *minutes* argument to cause the cached PPPoE configuration to be timed out after a specified number of minutes.
Step 6	**end** **Example:** `Router(config-bba-group)# end`	(Optional) Returns to privileged EXEC mode.

Troubleshooting Tips

Use the **show pppoe session** and **debug pppoe** commands to troubleshoot PPPoE sessions.

Configuring PPPoE on an Ethernet Interface

Perform this task to assign a PPPoE profile to an Ethernet interface.

SUMMARY STEPS

1. **enable**
2. **configure terminal**
3. **interface fastethernet** *slot/port*
4. **pppoe enable** [**group** *group-name*]
5. **end**

DETAILED STEPS

	Command or Action	Purpose
Step 1	**enable** **Example:** `Router> enable`	Enables privileged EXEC mode. • Enter your password if prompted.
Step 2	**configure terminal** **Example:** `Router# configure terminal`	Enters global configuration mode.
Step 3	**interface fastethernet** *slot/port* **Example:** `Router(config)# interface fastethernet 1/0`	Specifies a Fast Ethernet interface and enters interface configuration mode. Ethernet, Fast Ethernet, and Gigabit Ethernet can be used.
Step 4	**pppoe enable** [**group** *group-name*] **Example:** `Router(config-if)# pppoe enable group bba1`	Enables PPPoE sessions on an Ethernet interface or subinterface. **Note** If a PPPoE profile is not assigned to the interface by using the **group** *group-name* option, the interface will use the global PPPoE profile.
Step 5	**end** **Example:** `Router(config-if)# end`	(Optional) Exits the configuration mode and returns to privileged EXEC mode.

Implementing the VMI and Configuring the Routing Protocol

The configuration guidelines in this section are all optional, depending on the method and routing protocol that you choose to support the VMI interface.

- Creating and Configuring a Virtual Template for VMI PPPoE, page 19
- Creating and Configuring a VMI Interface for EIGRP IPv4, page 21 (Optional)
- Creating and Configuring a VMI interface for EIGRP IPv6, page 24 (Optional)

- Creating and Configuring a VMI Interface for OSPFv3, page 32
- Setting the EIGRP Change-based Dampening Interval for VMI Interfaces, page 27
- Setting the EIGRP Interval-based Dampening Interval for VMI Interfaces, page 29
- Enabling Multicast Support on a VMI Interface, page 31 (Optional)
- Creating and Configuring a VMI Interface for OSPFv3, page 32
- Verifying the OSPF Cost Dynamic for a VMI Interface, page 35
- Verifying the VMI Configuration, page 36

Creating and Configuring a Virtual Template for VMI PPPoE

To create and configure a virtual template, use the following commands beginning in global configuration mode. Cisco recommends that, when using the virtual template, you turn off the PPP keepalive messages to make CPU usage more efficient and to help avoid the potential for the router to terminate the connection if PPP keepalive packets are missed over a lossy Radio Frequency (RF) link.

You can configure multiple virtual template interfaces for your VMI PPPoE connections. The selection of which virtual template to use is predicated on the service name sent by the radio during PPPoE session establishment. As an example, consider the following configuration:

```
subscriber authorization enable
!
subscriber profile one
pppoe service manet_radio_over_x_band
!
!
subscriber profile two
pppoe service manet_radio_over_c_band
!
!
!
bba-group pppoe one
virtual-template 1
service profile one
!
!
bba-group pppoe two
virtual-template 2
service profile two

!
!
interface Virtual-Template1
.
.
.
!
!
interface Virtual-Template2
.
.
.
```

Using this configuration, any PPPoE request for a session (presentation of a PPPoE Active Discovery Initiate, or PADI packet) with the service name of "manet_radio_over_x_band" would use Virtual-Template1 as the interface to be cloned. Conversely, any PADI presented by the radio with the service name of "manet_radio_over_c_band" would use Virtual-Template2.

Note All service names used for MANET implementations *must* begin with the string "manet_radio".

SUMMARY STEPS

1. **enable**
2. **configure terminal**
3. **interface virtual-template** *number*
4. **ip unnumbered** *interface-type interface-number*
   or
   ipv6 enable
   or both if both IPv4 and IPv6 are used.

DETAILED STEPS

	Command	Purpose

Step 1	`enable`
	
	Example:
	`Router> enable`
		Enables privileged EXEC mode.
		• Enter your password if prompted.

Step 2	`configure terminal`
	
	Example:
	`Router# configure terminal`
		Enters global configuration mode.

Step 3	`interface virtual-template` *number* **Example:** `Router(config)# interface virtual-template` *number*	Creates a virtual template, and enters interface configuration mode.

Step 4	`ip unnumbered` *interface-type interface-number*
	or
	`ipv6 enable`
	or both if both IPv4 and IPv6 are used.
	
	Example:
	`Router(config-if)# ip unnumbered vmi1`
		Enables IP processing of IPv4 on an interface without assigning an explicit IP address to the interface.
		If you are using IPv6, enter the **ipv6 enable** command to enable IPv6 processing on the interface.
		If you are using both IPv6 and IPv4, include both commands.

Where To Go Next

Refer to the “Virtual Interface Template Service” chapter in the *Cisco IOS Dial S*olutions Configuration Guide for additional information about configuring the virtual templates

Creating and Configuring a VMI Interface for EIGRP IPv4

Perform this task to create the VMI interface and associate it with the Ethernet interface on which PPPoE is enabled. When you create a VMI interface, assign the IPv6 or IPv4 address to that VMI interface definition. Do not assign any addresses to the corresponding physical interface.

The radio alerts the router with PADT messages that the layer-2 radio frequency (RF) connection is no longer alive. Cisco recommends that you turn off the PPP keepalive messages to make CPU usage more efficient and to help avoid the potential for the router to terminate the connection if PPP keepalive packets are missed over a lossy RF link.

Note This configuration includes Quality of Service (QoS) fair queueing and service policy applied to the VMI interface. Make certain that any fair queueing left over from any previous configurations is removed before applying the new policy map to the virtual template in the VMI configuration.

SUMMARY STEPS

1. **enable**
2. **configure terminal**
3. **ip routing**
4. **no virtual-template subinterface**
5. **policy-map fair-queue**
6. **class class-default**
7. **fair-queue**
8. **interface virtual-template 1**
9. **ip unnumbered vmi1**
10. **service-policy output fair-queue**
11. **no keepalive**
12. **interface vmi** *interface-number*
13. **ip address** *address mask*
14. **no ip redirects**
15. **no ip split-horizon eigrp** *autonomous-system-number*
16. **physical-interface** *interface-type/slot*
17. **exit**
18. **router eigrp** *autonomous-system-number*
19. **network** *network-number ip-mask*
20. **redistribute connected**
21. **end**

DETAILED STEPS

	Command or Action	Purpose
Step 1	**enable** **Example:** Router> enable	Enables privileged EXEC mode. • Enter your password if prompted.
Step 2	**configure terminal** **Example:** Router# configure terminal	Enters global configuration mode.
Step 3	**ip routing** **Example:** Router# ip routing	Enables IP routing on the router.
Step 4	**no virtual template subinterface** **Example:** Router# **no virtual template subinterface**	Disables the virtual template on the subinterface.
Step 5	**policy-map** [**type** {**stack** | **access-control** | **port-filter** | **queue-threshold** | **logging** *log-policy*}] *policy-map-name* **Example:** Router(config-pmap)# policy map fair queue	Enters policy map configuration mode and creates or modifies a policy map that can be attached to one or more interfaces to specify a service policy.
Step 6	**class class-default** **Example:** Router(config-pmap)# class class-default	Specifies the name of the class whose policy you want to create or change or specifies the default class (commonly known as the class-default class) before you configure its policy.
Step 7	**fair-queue** **Example:** Router(config-pmap)# **fair-queue**	Enables weighted fair queueing (WFQ) on the interface
Step 8	**interface virtual-template** *number* **Example:** Router(config-if)# interface virtual-template 1	Enters interface configuration mode and creates a virtual template interface that can be configured and applied dynamically in creating virtual access interfaces.
Step 9	**ip unnumbered** *interface-type interface-number* **Example:** Router(config-if)# **ip unnumbered vmi1**	Enables IP processing of IPv4 on a serial interface without assigning an explicit IP address to the interface

	Command or Action	Purpose
Step 10	**service-policy output fair-queue output fair-queue** **Example:** `Router(config-if)# service-policy output fair-queue`	Attaches a policy map to an input interface or virtual circuit (VC) or an output interface or VC, to be used as the service policy for that interface or VC.
Step 11	**no keepalive** **Example:** `Router(config-if)# no keepalive`	Turns off PPP keepalive messages to the interface.
Step 12	**interface** *type interface-number* **Example:** `Router(config-if)# interface vmi interface-number`	Specifies the number of the VMI interface.
Step 13	**ip address** *address mask* **Example:** `Router(config-if)# ip address address mask`	Specifies the IP address of the VMI interface.
Step 14	**no ip redirect** **Example:** `Router(config)# no ip redirect`	Disables the sending of Internet Control Message Protocol (ICMP) redirect messages if the Cisco IOS software is forced to resend a packet through the same interface on which it was received.
Step 15	**no ip split-horizon eigrp** *autonomous-system-number* **Example:** `Router(config)# no ip split-horizon eigrp 101`	Disables the split horizon mechanism for the specified session.
Step 16	**physical-interface** *interface-type/slot* **Example:** `Router(config-if)#  physical-interface FE/0`	Creates the physical subinterface to be associated with the VMI interfaces on the router.
Step 17	**exit** **Example:** `Router(config-if)#  exit`	Leaves (exits) the active session (logs off the device) or exits a command mode to the next higher mode. This command can be used in any EXEC mode (such as User EXEC mode or Privileged EXEC mode) to exit from the EXEC process.
Step 18	**router eigrp** *autonomous-system-number* **Example:** `Router(config)# router eigrp 100`	Enables EIGRP routing on the router and identifies the autonomous system number.
Step 19	**network** *network-number ip-mask* **Example:** `Router(config)# network 10.1.1.0 0.0.0.255`	Identifies the EIGRP network.

	Command or Action	Purpose
Step 20	**redistribute connected** Example: Router(config)# redistribute connected	Redistributes routes from one routing domain into another routing domain.
Step 21	**end** **Example:** Router(config)# end	(Optional) Exits the configuration mode and returns to privileged EXEC mode.

Creating and Configuring a VMI interface for EIGRP IPv6

Perform this task to create the VMI interface and associate it with the Ethernet interface on which PPPoE is enabled. When you create a VMI interface, assign the IPv6 address to that VMI interface definition. Do not assign any addresses to the corresponding physical interface.

The radio alerts the router with PADT messages that the layer-2 radio frequency (RF) connection is no longer alive. If you turn off the PPP keepalive messages, it can make CPU usage more efficient and help to avoid the potential for the router to terminate the connection if PPP keepalive packets are missed over a lossy RF link.

SUMMARY STEPS

1. **enable**
2. **configure terminal**
3. **ipv6 unicast-routing**
4. **ipv6 cef**
5. **policy-map FQ**
6. **class class-default**
7. **fair-queue**
8. **interface virtual-template 1**
9. **ipv6 enable**
10. **no keepalive**
11. **service-policy FQ**
12. **interface vmi** *interface-number*
13. **ipv6 address** *address/prefix-length*
14. **ipv6 enable**
15. **ipv6 eigrp** *as-number*
16. **no ipv6 redirects**
17. **no ipv6 split-horizon eigrp** *as-number*
18. **physical-interface** *interface-type/slot*
19. **ipv6 router eigrp**
20. **no shutdown**

21. **redistribute connected**
22. **end**

DETAILED STEPS

.

	Command or Action	Purpose
Step 1	**enable** **Example:** `Router> enable`	Enables privileged EXEC mode. • Enter your password if prompted.
Step 2	**configure terminal** **Example:** `Router# configure terminal`	Enters global configuration mode.
Step 3	**ipv6 unicast-routing** **Example:** `Router# ipv6 unicst-routing`	Enables IPv6 unicast routing.
Step 4	**ipv6 cef** **Example:** `Router# ipv6 cef`	Enables IPv6 CEF on the router.
Step 5	**policy-map** [**type** {**stack** | **access-control** | **port-filter** | **queue-threshold** | **logging** *log-policy*}] *policy-map-name* **Example:** `Router(config-pmap)# policy-map FQ`	Enters policy map configuration mode and creates or modifies a policy map that can be attached to one or more interfaces to specify a service policy.
Step 6	**class class-default** **Example:** `Router(config-pmap)# class class-default`	Specifies the name of the class whose policy you want to create or change or specifies the default class (commonly known as the class-default class) before you configure its policy.
Step 7	**fair-queue** **Example:** `Router(config-pmap)# fair-queue`	Enables weighted fair queueing (WFQ) on the interface
Step 8	**interface virtual-template** *number* **Example:** `Router(config-if)# interface virtual-template 1`	Enters interface configuration mode and creates a virtual template interface that can be configured and applied dynamically in creating virtual access interfaces.
Step 9	**ipv6 enable** **Example:** `Router(config-if)# ipv6 enable`	Enables IPv6 routing on the virtual template.

	Command or Action	Purpose
Step 10	**no keepalive** **Example:** `Router(config-if)# no keepalive`	Turns off PPP keepalive messages to the virtual template.
Step 11	**service-po.icy output fair-queue output** *policy name* **Example:** `Router(config-if)# service-policy output FQ`	Attaches a policy map to an input interface or virtual circuit (VC) or an output interface or VC, to be used as the service policy for that interface or VC.
Step 12	**interface** *type number* **Example:** `Router(config)# interface vmi1`	Creates a VMI interface.
Step 13	**ipv6 address** *address/prefix* **Example:** `Router(config-if)# ipv6 address 2001:0DB1:8::1/64`	Specifies the IPv6 address for the interface.
Step 14	**ipv6 enable** **Example:** `Router(config-if)# ipv6 enable`	Enables IPv6 routing on the interface.
Step 15	**ipv6 eigrp** *as-number* ***Example:*** `Router(config-if)# ipv6 eigrp 1`	Enables Enhanced Interior Gateway Routing Protocol (EIGRP) for IPv6 on a specified interface and specifies the Autonomous System (AS) number.
Step 16	**no ipv6 redirect** **Example:** `Router(config-if)# no ipv6 redirect`	Disables the sending of Internet Control Message Protocol (ICMP) IPv6 redirect messages if Cisco IOS software is forced to resend a packet through the same interface on which the packet was received
Step 17	**no ipv6 split-horizon eigrp** *as_number* **Example:** `Router(config-if)# no ipv6 split-horizon eigrp 100`	Disables the split horizon for EIGRP IPv6. Associates this command with a specific EIGRP AS.
Step 18	**physical-interface** *interface-type/slot* **Example:** `Router(config-if)# physical-interface FE 00`	Creates the physical subinterface to be associated with the VMI interfaces on the router.
Step 19	**ipv6 router eigrp** *as-number* **Example:** `Router(config-if)# ipv6 router eigrp 100`	Places the router in router configuration mode, creates an Enhanced Interior Gateway Routing Protocol (EIGRP) routing process in IPv6, and allows you to enter additional commands to configure this process.

	Command or Action	Purpose

Step 20	`no shutdown`
	
	Example:
	`Router(config-if)# no shutdown`
		Restarts a disabled interface or prevents the interface from being shut down.

Step 21	`redistribute connected`
	
	Example:
	`Router(config-if)# redistribute connected`
		Allows the target protocol to redistribute routes learned by the source protocol and connected prefixes on those interfaces over which the source protocol is running. Redistributes IPv6 routes from one routing domain into another routing domain.

Step 22	`end`
	
	Example:
	`Router(config-if)# end`
		(Optional) Exits the configuration mode and returns to privileged EXEC mode.

Setting the EIGRP Change-based Dampening Interval for VMI Interfaces

Perform the following tasks to set the change-based dampening interval for VMI interfaces:

This configuration assumes that a virtual template and appropriate PPPoE configurations have already been completed. Refer to the*Cisco IOS IP Mobility Configuration Guide* for VMI configuration details.

This confiruation sets the threshold to 50 percent tolerance routing updates involving VMI interfaces and peers

Note You may configure this feature with either an IPv4 or an IPv6 address, or you may use both. If you are using both IPv4 and IPv6, then complete the entire configuration.

SUMMARY STEPS

1. **enable**
2. **configure terminal**
3. **interface** *type number*

To configure an IPv4 address:

4. **ip address** *address mask*
5. **no ip redirects**
6. **no ip split-horizon eigrp** *autonomous-system-number*

OR–To configure an IPv6 address:

7. **ipv6 address** *address*
8. **ip unnumbered** *interface-type interface-number*
   or
   ipv6 enable

9. **no ipv6 redirects**
10. **no ipv6 split-horizon eigrp** *autonomous-system-number*

(OR–use both the IPv4 and IPv6 configurations if both IPv4 and IPv6 are used and continue with the following commands:)

---

11. **eigrp** *vmi-interface-number* **interface** [**dampening-change** *value*] [**dampening-interval** *value*]
12. **physical-interface** *interface-type/slot*
13. **end**

DETAILED STEPS

	Command	Purpose

Step 1	`enable`
	
	Example:
	`Router> enable`
		Enables privileged EXEC mode.
		• Enter your password if prompted.

Step 2	`configure terminal`
	
	Example:
	`Router# configure terminal`
		Enters global configuration mode.

Step 3	`interface` *type number* **Example:** `Router(config)# interface vmi 1`	Enters interface configuration and creates a VMI interface.
Step 4	`ip address` *address mask* **Example:** `Router(config)# ip address 10.2.2.1 255.255.255.0`	Specifies the IP Address of the VMI interface.
Step 5	`ipv6 address` *address* **Example:** `Router(config)# ipv6 address 2001:0DB1:2::1/96`	Specifies the IPv6 address.

Step 6	`ip unnumbered` *interface-type interface-number*
	or
	`ipv6 enable`
	or both if both IPv4 and IPv6 are used.
	
	Example:
	`Router(config-if)# ip unnumbered vmi1`
		Enables IP processing of IPv4 on an interface without assigning an explicit IP address to the interface.
		If you are using IPv6, enter the **ipv6 enable** command to enable IPv6 processing on the interface.
		If you are using both IPv6 and IPv4, include both commands.

	Command	Purpose
Step 7	**eigrp** *vmi-interface-number* **interface** [**dampening-change** *value*] [**dampening-interval** *value*] **Example:** Router(config-if)# **eigrp 1 interface dampening-change 50**	Sets the EIGRP chane-based dampening interval.
Step 8	**physical-interface** *interface-type/slot* **Example:** Router(config-if)# **physical-interface Ethernet0/0**	Creates a physical subinterface to be associated with the VMI interface.

Setting the EIGRP Interval-based Dampening Interval for VMI Interfaces

Perform this task to set an interval-based dampening interval for VMI interfaces.

This configuration assumes that a virtual template and appropriate PPPoE configurations have already been completed. Refer to the*Cisco IOS IP Mobility Configuration Guide* for VMI configuration details.

This configuration sets the interval to 30 seconds at which updates occur for topology changes that affect VMI interfaces and peers:

SUMMARY STEPS

1. **enable**
2. **configure terminal**
3. **interface** *type number*
4. **ip address** *address mask*
5. **ipv6 address** *address*
6. **ip unnumbered** *interface-type interface-number*
   or
   ipv6 enable
   or both if both IPv4 and IPv6 are used.
7. **eigrp** *vmi-interface-number* **interface** [**dampening-change** *value*] [**dampening-interval** *value*]
8. **physical-interface** *interface-type/slot*
9. **end**

DETAILED STEPS

	Command	Purpose
Step 1	**enable** **Example:** Router> enable	Enables privileged EXEC mode. • Enter your password if prompted.
Step 2	**configure terminal** **Example:** Router# configure terminal	Enters global configuration mode.
Step 3	**interface** *type number* **Example:** Router(config)# **interface vmi 1**	Enters interface configuration and creates a VMI interface.
Step 4	**ip address** *address mask* **Example:** Router(config)# **ip address 10.2.2.1 255.255.255.0**	Specifies the IP Address of the VMI interface.
Step 5	**ipv6 address** *address* **Example:** Router(config)# ipv6 address 2001:0DB1:2::1/96	Specifies the IPv6 address.
Step 6	**ip unnumbered** *interface-type interface-number* or **ipv6 enable** or both if both IPv4 and IPv6 are used. **Example:** Router(config-if)# **ip unnumbered vmi1**	Enables IP processing of IPv4 on an interface without assigning an explicit IP address to the interface. If you are using IPv6, enter the **ipv6 enable** command to enable IPv6 processing on the interface. If you are using both IPv6 and IPv4, include both commands.
Step 7	**eigrp** *vmi-interface-number* **interface** [**dampening-change** *value*] [**dampening-interval** *value*] **Example:** Router(config-if)# **eigrp 1 interface dampening-interval 30**	Sets the EIGRP interval-based dampening interval.
Step 8	**physical-interface** *interface-type/slot* **Example:** Router(config-if)# **physical-interface Ethernet0/0**	Creates a physical subinterface to be associated with the VMI interface.
Step 9	**End** **Example:** Router(config-if)# **end**	Exits interface configuration.

Enabling Multicast Support on a VMI Interface

Perform this task to enable bypass mode on a VMI interface and override the default aggregation that occurs on VMI interfaces. This configuration assumes that you have already configured a virtual template and appropriate PPPoE sessions for the VMI interface.

Using bypass mode can cause databases in the applications to be larger because knowledge of more interfaces are required for normal operation.

After you enter the **mode bypass** command, Cisco recommends that you copy the running configuration to NVRAM because the default mode of operation for VMI is to logically aggregate the virtual-access interfaces.

SUMMARY STEPS

1. **enable**
2. **configure terminal**
3. **interface** *type number*
4. **mode bypass**
5. **exit**

DETAILED STEPS

	Command or Action	Purpose
Step 1	**enable** **Example:** `Router> enable`	Enables privileged EXEC mode. • Enter your password if prompted.
Step 2	**configure terminal** **Example:** `Router# configure terminal`	Enters global configuration mode.
Step 3	**interface** *type number* **Example:** `Router(config-if)# interface vmi1`	Enters interface configuration mode and reates a VMI interface.
Step 4	**mode bypass** **Example:** `Router(config-if)# mode bypass`	Overrides the default aggregation on the VMI interface and sets the mode to bypass to support multicast traffic on the interface.
Step 5	**end** **Example:** `Router(config-if)# exit`	Exits interface configuration.

Creating and Configuring a VMI Interface for OSPFv3

Perform this task to create the VMI interface and associate it with the Ethernet interface on which PPPoE is enabled. When you create a VMI interface, assign the IPv6 or IPv4 address to that VMI interface definition. Do not assign any addresses to the corresponding physical interface.

SUMMARY STEPS

1. **enable**
2. **configure terminal**
3. **ipv6 unicast-routing**
4. **ipv6 cef**
5. **policy-map fair-queue**
6. **class class-default**
7. **fair-queue**
8. **interface virtual-template 1**
9. **ipv6 enable**
10. **no keepalive**
11. **service-policy output fair-queue**
12. **interface vmi** *interface-number*
13. **ipv6 enable**
14. **ipv6 ospf 1 area 0**
15. **ipv6 ospf network point-to-multipoint**
16. **ipv6 ospf cost hysteresis 1000**
17. **ipv6 ospf cost dynamic weight throughput** *percent*
18. **ipv6 ospf cost dynamic weight resources** *percent*
19. **ipv6 ospf cost dynamic weight latency** *percent*
20. **ipv6 ospf cost dynamic weight L2-factor** *percent*
21. **ipv6 ospf** *process-id* **area** *area-id* [**instance** *instance-id*]
22. **physical-interface** *interface-type/slot*
23. **ipv6 router ospf** 1
24. **router-id** *ip-address*
25. **redistribute connected** *metric type 1*
26. **timers spf** *spf-delay spf-hold*
27. **end**

DETAILED STEPS

	Command or Action	Purpose
Step 1	**enable** **Example:** `Router> enable`	Enables privileged EXEC mode. • Enter your password if prompted.
Step 2	**configure terminal** **Example:** `Router# configure terminal`	Enters global configuration mode.
Step 3	**ipv6 unicast-routing** **Example:** `Router(config)# ipv6 unicst-routing`	Enables IPv6 unicast routing.
Step 4	**ipv6 cef** **Example:** `Router(config)# ipv6 cef`	Enables IPv6 CEF on the router.
Step 5	**policy-map** [**type** {**stack** | **access-control** | **port-filter** | **queue-threshold** | **logging** *log-policy*}] *policy-map-name* **Example:** `Router(config-pmap)# policy-map FQ`	Enters policy map configuration mode and creates or modifies a policy map that can be attached to one or more interfaces to specify a service policy.
Step 6	**class class-default** **Example:** `Router(config-pmap)# class class-default`	Specifies the name of the class whose policy you want to create or change or specifies the default class (commonly known as the class-default class) before you configure its policy.
Step 7	**fair-queue** **Example:** `Router(config-pmap)# fair-queue`	Enables weighted fair queueing (WFQ) on the interface
Step 8	**interface virtual-template** *number* **Example:** `Router(config-if)# interface virtual-template 1`	Enters interface configuration mode and creates a virtual template interface that can be configured and applied dynamically in creating virtual access interfaces.
Step 9	**ipv6 enable** **Example:** `Router(config-if)# ipv6enable`	Enables IPv6 on the virtual template.
Step 10	**no keepalive** **Example:** `Router(config-if)# no keepalive`	Turns off PPP keepalive messages.

	Command or Action	Purpose
Step 11	**service-po.icy output fair-queue output fair-queue** **Example:** `Router(config-if)# service-policy output fair-queue`	Attaches a policy map to an input interface or virtual circuit (VC) or an output interface or VC, to be used as the service policy for that interface or VC.
Step 12	**interface** *type number* **Example:** `Router(config-if)# interface vmi1`	Creates a VMI interface.
Step 13	**ipv6 enable** **Example:** `Router(config-if)# ip address fastethernet 0/0`	Enables IPv6 routing on the VMI interface.
Step 14	**ipv6 ospf** *session* **area** *area* **Example:** `Router(config-if)# ipv6 ospf 1 area 0`	Enables IPv6 OSPF routing on the interface.
Step 15	**ipv6 ospf network{broadcast | non-broadcast | {point-to-multipoint [non-broadcast] | point-to-point}}** **Example:** `Router(config-if)# ipv6 ospf network point-to-multipoint`	Specifies the OSPF network type.
Step 16	**ipv6 ospf cost hysteresis** **Example:** `ipv6 ospf cost hysteresis threshold 1000`	Sets the hysterisis tolerance for the interface.
Step 17	**ipv6 ospf cost dynamic** **Example:** `Router(config-if)# ipv6 ospf cost dynamic weight throughput 0`	Sets the metric for the throughput threshold.
Step 18	**ipv6 ospf cost dynamic** **Example:** `Router(config-if)# ipv6 ospf cost dynamic weight resources 29`	Sets the metric for the resource factor.
Step 19	**ipv6 ospf cost dynamic** **Example:** `Router(config-if)# ipv6 ospf cost dynamic weight latency 29`	Sets the threshold for the latency factor.

	Command or Action	Purpose
Step 20	**ipv6 ospf cost** {*number* | **dynamic**} Example: Router(config-if)# ipv6 ospf cost dynamic weight L2-factor 29	Sets the metric for the Layer 2 -to- Layer 3 delay factor.
Step 21	**ipv6 ospf** *process-id* **area** *area-id* [**instance** *instance-id*] **Example:** Router(config-if)# ipv6 ospf 1 area 0	Enables OSPF for IPv6 on an interface.
Step 22	**physical-interface** *interface-type/slot* **Example:** Router(config-if)# **physical-interface** FE 0/0	Creates the physical subinterface to be associated with the VMI interfaces on the router.
Step 23	**ipv6 router ospf** *process-id* *Example:* Router(config-if)# ipv6 router ospf 1	Enables OSPF for IPv6 router configuration mode.
Step 24	**router-id** *ip-address* **Example:** Router(config-if)# router-id 10.1.1.1	Identifies a specific router rather than allowing the dynamic assignment of the router to occur.
Step 25	**redistribute connected metric-type {internal | external}** Example: Router(config-if)# redistribute connected metric-type internal	Redistributes IPv6 routes from one routing domain into another routing domain. Allows the target protocol to redistribute routes learned by the source protocol and connected prefixes on those interfaces over which the source protocol is running.
Step 26	**timers spf** *spf-delay spf-hold* **Example:** Router(config-if)#timers spf 1 1	Specifies the spf delay time and maximum hold time in milliseconds to delay the calculations for Value ranges for these arguments is 1 to 600,000 milliseconds. The OSPF Shortest Path First Throttling feature makes it possible to configure SPF scheduling in millisecond intervals and to potentially delay shortest path first (SPF) calculations during network instability. SPF is scheduled to calculate the Shortest Path Tree (SPT) when there is a change in topology
Step 27	**end** **Example:** Router(config-if)# end	(Optional) Exits the configuration mode and returns to privileged EXEC mode.

Verifying the OSPF Cost Dynamic for a VMI Interface

The following shows a sample output display when the OSPF cost dynamic is configured on a VMI.

```
Router1# show ipv6 ospf interface serial2/0

Serial2/0 is up, line protocol is up
```

```
Link Local Address FE80::A8BB:CCFF:FE00:100, Interface ID 10
Area 1, Process ID 1, Instance ID 0, Router ID 200.1.1.1
Network Type POINT_TO_MULTIPOINT, Cost: 64 (dynamic), Cost Hysteresis: 200
Cost Weights: Throughput 100, Resources 20, Latency 80, L2-factor 100
Transmit Delay is 1 sec, State POINT_TO_MULTIPOINT,
Timer intervals configured, Hello 30, Dead 120, Wait 120, Retransmit 5
  Hello due in 00:00:19
Index 1/2/3, flood queue length 0
Next 0x0(0)/0x0(0)/0x0(0)
Last flood scan length is 0, maximum is 0
Last flood scan time is 0 msec, maximum is 0 msec
Neighbor Count is 0, Adjacent neighbor count is 0
Suppress hello for 0 neighbor(s)
```

Verifying the VMI Configuration

Possible commands to use in verifying the configuration include:

- **show pppoe session all**
- **show interface vmi**
- **show vmi neighbors**
- **show vmi neighbors detail**
- **show ip eigrp interfaces**
- **show ip eigrp neighbors**
- **show ipv6 eigrp interfaces**
- **show ipv6 eigrp neighbors**
- **show ipv6 ospf interface**

Configuration Examples for VMI PPPoE

Basic VMI PPPoE Configuration with EIGRP IPv4: Example

This example illustrates the simplest configuration using EIGRP as the routing protocol. This configuration includes one VMI interface.

```
version 12.4
service timestamps debug datetime msec
service timestamps log datetime msec
no service password-encryption
!
hostname host1
!
logging buffered 3000000
no logging console
enable password test
!
no aaa new-model
clock timezone EST -5
ip cef
!
no ip domain lookup
subscriber authorization enable
!
subscriber profile host1
 pppoe service manet_radio
!
subscriber profile test
 pppoe service manet_radio
!
!
multilink bundle-name authenticated
no virtual-template subinterface
!
archive
 log config
!
policy-map FQ
 class class-default
  fair-queue
!
bba-group pppoe test
 virtual-template 1
 service profile test
!
bba-group pppoe VMI1
 virtual-template 1
 service profile host1
!
!
interface Loopback1
 ip address 10.9.1.1 255.255.255.0
 no ip proxy-arp
 load-interval 30
!
interface FastEthernet0/0
 no ip address
 no ip mroute-cache
 load-interval 30
 speed 100
 full-duplex
 pppoe enable group VMI1
!
interface Serial1/0
```

```
 no ip address
 no ip mroute-cache
 shutdown
 clock rate 2000000
!
interface Serial1/1
 no ip address
 no ip mroute-cache
 shutdown
 clock rate 2000000
!
!
interface Serial1/2
 no ip address
 no ip mroute-cache
 shutdown
 clock rate 2000000
!
interface Serial1/3
 no ip address
 no ip mroute-cache
 shutdown
 clock rate 2000000
!
interface FastEthernet2/0
 switchport access vlan 2
 duplex full
 speed 100
!
interface FastEthernet2/1
 switchport access vlan 503
 load-interval 30
 duplex full
 speed 100
!
interface FastEthernet2/2
 shutdown
!
interface FastEthernet2/3
 shutdown
!
interface Virtual-Template1
 ip unnumbered vmi1
 load-interval 30
 no keepalive
 service-policy output FQ
!
interface Vlan1
 no ip address
 no ip mroute-cache
 shutdown
!
interface Vlan2
 ip address 10.15.60.144 255.255.255.0
 no ip mroute-cache
 load-interval 30
!
interface Vlan503
 ip address 10.2.2.2 255.255.255.0
 load-interval 30
!
interface vmi1
 ip address 10.3.3.1 255.255.255.0
 no ip redirects
```

```
 no ip split-horizon eigrp 1
 load-interval 30
 eigrp 1 interface dampening-change 50
 physical-interface FastEthernet0/0
!
router eigrp 1
 redistribute connected
 network 10.2.0.0 0.0.255.255
 network 10.3.0.0 0.0.255.255
 auto-summary
!
no ip http server
no ip http secure-server
!
control-plane
!
!
line con 0
 exec-timeout 0 0
 stopbits 1
line aux 0
line vty 0 4
 login
!
end
```

Basic VMI PPPoE Configuration Using EIGRP for IPv6: Example

This example shows the basic requirements for configuring a VMI interface that uses EIGRP for IPv6 as the routing protocol. It includes one VMI interface.

```
version 12.4
service timestamps debug datetime msec
service timestamps log datetime msec
no service password-encryption
!
hostname host1
!
logging buffered 3000000
no logging console
enable password lab
!
no aaa new-model
clock timezone EST -5
ip cef
!
!
!
!
no ip domain lookup
ipv6 unicast-routing
ipv6 cef
subscriber authorization enable
!
subscriber profile host1
 pppoe service manet_radio
!
subscriber profile test
 pppoe service manet_radio
!
!
```

```
multilink bundle-name authenticated
no virtual-template subinterface
!
!
!
!
archive
 log config
!
!
policy-map FQ
 class class-default
  fair-queue
!
!
!
!
!
bba-group pppoe test
 virtual-template 1
 service profile test
!
bba-group pppoe VMI1
 virtual-template 1
 service profile host1
!
!
!
interface Loopback1
 ip address 10.9.1.1 255.255.255.0
 no ip proxy-arp
 load-interval 30
 ipv6 address 2001:0DB1:1::1/64
 ipv6 enable
 ipv6 eigrp 1
!
interface FastEthernet0/0
 no ip address
 no ip mroute-cache
 load-interval 30
 speed 100
 full-duplex
 pppoe enable group VMI1
!
interface Serial1/0
 no ip address
 no ip mroute-cache
 shutdown
 clock rate 2000000
!
interface Serial1/1
 no ip address
 no ip mroute-cache
 shutdown
 clock rate 2000000
!
interface Serial1/2
 no ip address
 no ip mroute-cache
 shutdown
 clock rate 2000000
!
interface Serial1/3
 no ip address
```

```
 no ip mroute-cache
 shutdown
 clock rate 2000000
!
interface FastEthernet2/0
 switchport access vlan 2
 duplex full
 speed 100
!
interface FastEthernet2/1
 switchport access vlan 503
 load-interval 30
 duplex full
 speed 100
!
interface FastEthernet2/2
 shutdown
!
interface FastEthernet2/3
 shutdown
!
interface Virtual-Template1
 no ip address
 load-interval 30
 ipv6 enable
 no keepalive
 service-policy output FQ
!
interface Vlan1
 no ip address
 no ip mroute-cache
 shutdown
!
interface Vlan2
 ip address 10.15.60.144 255.255.255.0
 no ip mroute-cache
 load-interval 30
!
interface Vlan503
 ip address 10.2.2.2 255.255.255.0
 load-interval 30
 ipv6 address 2001:0DB1:8::1/64
 ipv6 enable
 ipv6 eigrp 1
!
interface vmi1
 no ip address
 load-interval 30
 ipv6 enable
 no ipv6 redirects
 ipv6 eigrp 1
 no ipv6 split-horizon eigrp 1
 physical-interface FastEthernet0/0
!
no ip http server
no ip http secure-server
!
ipv6 router eigrp 1
 router-id 10.9.1.1
 no shutdown
 redistribute connected
!
control-plane
!
```

```
line con 0
 exec-timeout 0 0
 stopbits 1
line aux 0
line vty 0 4
 login
!
end
```

VMI PPPoE Configuration Using EIGRP for IPv4 and IPv6: Example

The following examples shows how to configure VMI PPPoE using EIGRP as the IP routing protocol when you have both IPv4 and IPv6 addresses configured on the interface. This configuration includes one VMI interface.

```
version 12.4
service timestamps debug datetime msec
service timestamps log datetime msec
no service password-encryption
!
hostname host1
!
logging buffered 3000000
no logging console
enable password lab
!
no aaa new-model
clock timezone EST -5
ip cef
!
no ip domain lookup
ipv6 unicast-routing
ipv6 cef
subscriber authorization enable
!
subscriber profile host1
 pppoe service manet_radio
!
subscriber profile test
 pppoe service manet_radio
!
!
multilink bundle-name authenticated
no virtual-template subinterface
!
archive
 log config
!
policy-map FQ
 class class-default
  fair-queue
!
bba-group pppoe test
 virtual-template 1
 service profile test
!
bba-group pppoe VMI1
 virtual-template 1
 service profile host1
```

```
!
!
interface Loopback1
 ip address 10.9.1.1 255.255.255.0
 no ip proxy-arp
 load-interval 30
 ipv6 address 2001:0DB1:1::1/64
 ipv6 enable
 ipv6 eigrp 1
!
interface FastEthernet0/0
 no ip address
 no ip mroute-cache
 load-interval 30
 speed 100
 full-duplex
 pppoe enable group VMI1
!
interface Serial1/0
 no ip address
 no ip mroute-cache
 shutdown
 clock rate 2000000
!
interface Serial1/1
 no ip address
 no ip mroute-cache
 shutdown
 clock rate 2000000
!
interface Serial1/2
 no ip address
 no ip mroute-cache
 shutdown
 clock rate 2000000
!
interface Serial1/3
 no ip address
 no ip mroute-cache
 shutdown
 clock rate 2000000
!
interface FastEthernet2/0
 switchport access vlan 2
 duplex full
 speed 100
!
interface FastEthernet2/1
 switchport access vlan 503
 load-interval 30
 duplex full
 speed 100
!
interface FastEthernet2/2
 shutdown
!
interface FastEthernet2/3
 shutdown
!
interface Virtual-Template1
 ip unnumbered vmi1
 load-interval 30
 ipv6 enable
 no keepalive
```

```
 service-policy output FQ
!
interface Vlan1
 no ip address
 no ip mroute-cache
 shutdown
!
interface Vlan2
 ip address 10.15.60.144 255.255.255.0
 no ip mroute-cache
 load-interval 30
!
interface Vlan503
 ip address 10.2.2.2 255.255.255.0
 load-interval 30
 ipv6 address 2001:0DB1:8::1/64
 ipv6 enable
 ipv6 eigrp 1
!
interface vmi1
 ip address 10.3.3.1 255.255.255.0
 no ip redirects
 no ip split-horizon eigrp 1
 load-interval 30
 ipv6 address 2001:0DB1:2::1/64
 ipv6 enable
 no ipv6 redirects
 ipv6 eigrp 1
 no ipv6 split-horizon eigrp 1
 eigrp 1 interface dampening-interval 30
 physical-interface FastEthernet0/0
!
router eigrp 1
 redistribute connected
 network 10.2.0.0 0.0.255.255
 network 10.3.0.0 0.0.255.255
 auto-summary
!
!
!
no ip http server
no ip http secure-server
!
ipv6 router eigrp 1
 router-id 10.9.1.1
 no shutdown
 redistribute connected
!
control-plane
!
!
line con 0
 exec-timeout 0 0
 stopbits 1
line aux 0
line vty 0 4
 login
!
end
```

EIGRP Metric Dampening for VMI Interfaces: Examples

The **eigrp interface** command advertises routing changes for EIGRP traffic only.

The REPLY sent to any QUERY will always contain the latest metric information. Exceptions which will result in immediate UPDATE being sent:

- A down interface
- A down route
- Any change in metric which results in the router selecting a new next hop

To prevent network-wide churn from frequent metric changes from impacting the network, even causing network-wide churn, metrics can be dampened, or thresholds set, so that any change that does not exceed the dampening threshold is ignored. The examples in this section show how to set the EIGRP dampening intervals to avoid such impacts.

EIGRP Change-based Dampening for VMI Interfaces: Example

The following example sets the threshold to 50 percent tolerance routing updates involving VMI interfaces and peers:

```
interface vmi1
 ip address 10.2.2.1 255.255.255.0
 ipv6 address 2001:0DB1:2::1/96
 ipv6 enable
 eigrp 1 interface dampening-change 50
 physical-interface Ethernet0/0
```

EIGRP Interval-based Dampening for VMI Interfaces: Example

The following example sets the interval to 30 seconds at which updates occur for topology changes that affect VMI interfaces and peers:

```
interface vmi1
 ip address 10.2.2.1 255.255.255.0
 ipv6 address 2001:0DB1:2::1/96
 ipv6 enable
 eigrp 1 interface dampening-interval 30
 physical-interface Ethernet0/0
```

VMI PPPoE Configuration for OSPFv3: Example

The following example shows how to configure VMI PPPoE using OSPFv3 as the routing protocol. This configuration includes three VMI interfaces.

```
Building configuration...

Current configuration : 3568 bytes
!
! Last configuration change at 00:03:01 EST Thu Jan 1 2004
!
version 12.4
service timestamps debug datetime msec
service timestamps log datetime msec
no service password-encryption
!
```

```
hostname host2
!
boot-start-marker
boot system flash:c3270-adventerprisek9-mz.124-11.3.PI6b
boot-end-marker
!
logging buffered 3000000
no logging console
enable password lab
!
no aaa new-model
clock timezone EST -5
!
!
ip cef
!
!
no ip domain lookup
ipv6 unicast-routing
ipv6 cef
subscriber authorization enable
!
subscriber profile host2
 pppoe service manet_radio
!
!
multilink bundle-name authenticated
no virtual-template subinterface
!
policy-map FQ
 class class-default
  fair-queue
!
bba-group pppoe VMI1
 virtual-template 1
 service profile host2
!
bba-group pppoe VMI2
 virtual-template 2
 service profile host2
!
bba-group pppoe VMI3
 virtual-template 3
 service profile host2
!
!
interface Loopback1
 ip address 10.16.1.1 255.255.255.0
 no ip proxy-arp
 load-interval 30
 ipv6 address 2001:0DB1:1::1/64
 ipv6 enable
 ipv6 ospf 1 area 0
!
interface FastEthernet0/0
 no ip address
 load-interval 30
 duplex full
 speed 100
 pppoe enable group VMI3
!
interface GigabitEthernet0/0
 no ip address
 load-interval 30
```

```
 duplex full
 speed 100
 pppoe enable group VMI1
!
interface FastEthernet0/1
 no ip address
 shutdown
 duplex auto
 speed auto
!
interface GigabitEthernet0/1
 no ip address
 load-interval 30
 duplex full
 speed 100
 pppoe enable group VMI2
!
interface Serial1/0
 no ip address
 shutdown
!
interface Serial1/1
 no ip address
 shutdown
!
interface Serial1/2
 no ip address
 shutdown
 clock rate 2000000
!
interface Serial1/3
 no ip address
 shutdown
 clock rate 2000000
!
interface FastEthernet2/0
 switchport access vlan 2
 duplex full
 speed 100
!
interface FastEthernet2/1
 switchport access vlan 503
 load-interval 30
 duplex full
 speed 100
!
interface FastEthernet2/2
 shutdown
!
interface FastEthernet2/3
 shutdown
!
interface Virtual-Template1
 no ip address
 load-interval 30
 ipv6 enable
 no keepalive
 service-policy output FQ
!
interface Virtual-Template2
 no ip address
 load-interval 30
 ipv6 enable
 no keepalive
```

```
 service-policy output FQ
!
interface Virtual-Template3
 no ip address
 load-interval 30
 ipv6 enable
 no keepalive
 service-policy output FQ
!
interface Vlan1
 no ip address
 shutdown
!
interface Vlan2
 ip address 10.15.60.146 255.255.255.0
 load-interval 30
!
interface Vlan503
 ip address 10.2.2.2 255.255.255.0
 load-interval 30
 ipv6 address 2001:0DB1:8::1/64
 ipv6 enable
 ipv6 ospf 1 area 0
!
interface vmi1
 no ip address
 load-interval 30
ipv6 enable
 ipv6 ospf network point-to-multipoint
 ipv6 ospf cost dynamic hysteresis threshold 1000
 ipv6 ospf cost dynamic weight throughput 0
 ipv6 ospf cost dynamic weight resources 29
 ipv6 ospf cost dynamic weight latency 29
 ipv6 ospf cost dynamic weight L2-factor 29
 ipv6 ospf 1 area 0
 physical-interface GigabitEthernet0/0
!
interface vmi2
 no ip address
 load-interval 30
ipv6 enable
 ipv6 ospf network point-to-multipoint
 ipv6 ospf cost dynamic hysteresis threshold 1000
 ipv6 ospf cost dynamic weight throughput 0
 ipv6 ospf cost dynamic weight resources 29
 ipv6 ospf cost dynamic weight latency 29
 ipv6 ospf cost dynamic weight L2-factor 29
 ipv6 ospf 1 area 0
 physical-interface GigabitEthernet0/1
!
interface vmi3
 no ip address
 load-interval 30
ipv6 enable
 ipv6 ospf network point-to-multipoint
 ipv6 ospf cost dynamic hysteresis threshold 1000
 ipv6 ospf cost dynamic weight throughput 0
 ipv6 ospf cost dynamic weight resources 29
 ipv6 ospf cost dynamic weight latency 29
 ipv6 ospf cost dynamic weight L2-factor 29
 ipv6 ospf 1 area 0
 physical-interface FastEthernet0/0
!
!
```

```
!
no ip http server
no ip http secure-server
!
ipv6 router ospf 1
 router-id 10.16.1.1
 log-adjacency-changes
 redistribute connected metric-type 1
 timers spf 1 1

!
!
!
!
!
control-plane
!
!
line con 0
 exec-timeout 0 0
line aux 0
line vty 0 4
 login
!
end

end
```

VMI PPPoE Configuration Using Multiple Virtual Templates: Example

The following example shows how to configure VMI using multiple virtual templates. This example shows two VMIs, each with a different service name.

```
version 12.4
service timestamps debug datetime msec
service timestamps log datetime msec
no service password-encryption
!
hostname router1
!
boot-start-marker
boot-end-marker
!
!
no aaa new-model
!
resource policy
!
clock timezone EST -5
ip cef
no ip domain lookup
!
!
subscriber authorization enable
!
subscriber profile router1_ground
 pppoe service manet_radio_ground
!
subscriber profile router1_satellite
 pppoe service manet_radio_satellite
!
ipv6 unicast-routing
```

```
policy-map FQ
 class class-default
  fair-queue
!
!
!
bba-group pppoe router1_ground
 virtual-template 1
 service profile router1_ground
!
bba-group pppoe router1_satellite
 virtual-template 2
 service profile router1_satellite
!
!
interface Ethernet0/0
 pppoe enable group router1_ground
!
interface Ethernet0/1
 pppoe enable group router1_satellite
!
interface Ethernet0/2
 no ip address
 shutdown
!
interface Ethernet0/3
 no ip address
 shutdown
!
interface Ethernet1/0
 no ip address
 shutdown
!
interface Ethernet1/1
 no ip address
 shutdown
!
interface Ethernet1/2
 no ip address
 shutdown
!
interface Ethernet1/3
 no ip address
 shutdown
!
interface Serial2/0
 no ip address
 shutdown
 serial restart-delay 0
!
interface Serial2/1
 no ip address
 shutdown
 serial restart-delay 0
!
interface Serial2/2
 no ip address
 shutdown
 serial restart-delay 0
!
interface Serial2/3
 no ip address
 shutdown
 serial restart-delay 0
```

```
!
interface Serial3/0
 no ip address
 shutdown
 serial restart-delay 0
!
interface Serial3/1
 no ip address
 shutdown
 serial restart-delay 0
!
interface Serial3/2
 no ip address
 shutdown
 serial restart-delay 0
!
interface Serial3/3
 no ip address
 shutdown
 serial restart-delay 0
!
interface Virtual-Template1
 ip unnumbered vmi1
 load-interval 30
 no peer default ip address
 no keepalive
 service-policy output FQ
!
interface Virtual-Template2
 ip unnumbered vmi1
 load-interval 30
 no peer default ip address
 no keepalive
 service-policy output FQ
!
interface vmi1
 description ground connection
 ip address 10.2.2.1 255.255.255.0
 physical-interface Ethernet0/0
!
interface vmi2
 description satellite connection
 ip address 10.2.3.1 255.255.255.0
 physical-interface Ethernet0/1
!
router eigrp 1
 network 10.2.2.0 0.0.0.255
 network 10.2.3.0 0.0.0.255
 auto-summary
!
!
no ip http server
!
!
!
!
!
control-plane
!
!
line con 0
 exec-timeout 0 0
 logging synchronous
line aux 0
```

```
line vty 0 4
 login
!
end
```

Enabling Multicast Support on a VMI Interface: Example

The command is entered in configuration, while in config-if mode. For example:

router#conf t

Enter configuration commands, one per line. End with CTRL/Z

router(config)#interface vmi1

router(config-if)#mode bypass

router(config-if)#

The format of the command is:

mode [aggregate | bypass]

PPPoE Configuration: Example

In the following example, the subscriber profile uses a predefined string manet_radio to determine whether an inbound PPPoE session is coming from a device that supports VMI. All IP definitions are configured on the VMI interface rather than on the FastEthernet or Virtual-Template interfaces; when those interfaces are configured, do not specify either an IP address or an IPv6 address.

No IP address is specified and IPv6 is enabled by default on the VMI interface.

```
subscriber profile list1
  pppoe service service1
  subscriber authorization enable

!
bba-group pppoe bba1
  virtual-template 1
  service profile list1
!
interface FastEthernet0/1
  no ip address
  pppoe enable group bba1
!
interface Virtual-Template 1
  no ip address
  no peer default ip-address
!
interface vmi 1
  no ip address
  physical-interface FastEthernet0/1
```

Configuring Two VMIs: Example

The following example shows a configuration that includes two VMIs, each having different service names.

```
version 12.4
service timestamps debug datetime msec
service timestamps log datetime msec
no service password-encryption
!
hostname router1
!
boot-start-marker
boot-end-marker
!
!
no aaa new-model
!
resource policy
!
clock timezone EST -5
ip cef
no ip domain lookup
!
!
subscriber authorization enable
!
subscriber profile router1_ground
 pppoe service manet_radio_ground
!
subscriber profile router1_satellite
 pppoe service manet_radio_satellite
!
ipv6 unicast-routing
 policy-map FQ
 class class-default
 fair-queue
!
!
!
bba-group pppoe router1_ground
 virtual-template 1
 service profile router1_ground
!
bba-group pppoe router1_satellite
 virtual-template 2
 service profile router1_satellite
!
!
interface Ethernet0/0
 pppoe enable group router1_ground
!
interface Ethernet0/1
 pppoe enable group router1_satellite
!
interface Ethernet0/2
 no ip address
 shutdown
!
interface Ethernet0/3
 no ip address
 shutdown
!
```

```
interface Ethernet1/0
 no ip address
 shutdown
!
interface Ethernet1/1
 no ip address
 shutdown
!
interface Ethernet1/2
 no ip address
 shutdown
!
interface Ethernet1/3
 no ip address
 shutdown
!
interface Serial2/0
 no ip address
 shutdown
 serial restart-delay 0
!
interface Serial2/1
 no ip address
 shutdown
 serial restart-delay 0
!
interface Serial2/2
 no ip address
 shutdown
 serial restart-delay 0
!
interface Serial2/3
 no ip address
 shutdown
 serial restart-delay 0
!
interface Serial3/0
 no ip address
 shutdown
 serial restart-delay 0
!
interface Serial3/1
 no ip address
 shutdown
 serial restart-delay 0
!
interface Serial3/2
 no ip address
 shutdown
 serial restart-delay 0
!
interface Serial3/3
 no ip address
 shutdown
 serial restart-delay 0
!
interface Virtual-Template1
 ip unnumbered vmi1
 load-interval 30
 no peer default ip address
 no keepalive
 service-policy output FQ
!
interface Virtual-Template2
```

```
 ip unnumbered vmi2
 load-interval 30
 no peer default ip address
 no keepalive
 service-policy output FQ
!
interface vmi1
 description ground connection
 ip address 2.2.2.1 255.255.255.0
 physical-interface Ethernet0/0
!
interface vmi2
 description satellite connection
 ip address 2.2.3.1 255.255.255.0
 physical-interface Ethernet0/1
!
router eigrp 1
 network 2.2.2.0 0.0.0.255
 network 2.2.3.0 0.0.0.255
 auto-summary
!
!
no ip http server
!
!
!
!
!
control-plane
!
!
line con 0
 exec-timeout 0 0
 logging synchronous
line aux 0
line vty 0 4
 login
!
end
```

Marking and Queuing Packets over VMI: Example

This configuration example includes QoS features in use with a VMI. Packets are marked either outbound or inbound over the VMI according to a policy map defined on the interface. This configuration differs slightly from standard QoS configurations because it requires that two different policies be applied to two different interfaces.

You apply the fair queue policy to the virtual template to define the queueing mechanism. To mark packets, you create a another policy and apply it to VMI to mark the traffic. The two policy maps work in tandem to provide the QoS support on the radio interface

Note Packets will not be marked if you use the standard fair queue class or use hierarchical policy maps applied to the virtual templates.

The examples that follow show the device configurations that support the marking and queueing on a VMI.

Output Configuration of VMI and Policy Map Configured on Router 1

```
!
!
!
class-map match-all udp-traffic
 match access-group 100
!
!
policy-map FQ
 class class-default
  fair-queue
policy-map my-marker
 class udp-traffic
  set dscp af41
!
!
interface Virtual-Template1
.
.
.
 service-policy output FQ
!
!
interface vmi1
.
.
.
 service-policy output my-marker
.
.
.
!
access-list 100 permit udp any any
!
```

Input Configuration for VMI and Policy Map configured on Router 2

```
!
!
!
class-map match-all udp-traffic
 match access-group 100
!
!
policy-map FQ
 class class-default
  fair-queue
policy-map my-marker
 class udp-traffic
  set dscp ef
!
interface Virtual-Template1
...
 service-policy output FQ
!
interface vmi1
...
 service-policy input my-marker
```

```
!
access-list 100 permit udp any any
!
```

This display is output from the **show policy-map** command for the VMI and policy map configured on on Router 1.

```
Router1# show policy-map int vmi1

 vmi1

  Service-policy output: my-marker

    Class-map: udp-traffic (match-all)
      5937331 packets, 6234197550 bytes
      30 second offered rate 840000 bps, drop rate 0 bps
      Match: access-group 100
      QoS Set
        dscp af41
          Packets marked 5937331

    Class-map: class-default (match-any)
      12829 packets, 769740 bytes
      30 second offered rate 0 bps, drop rate 0 bps
      Match: any
!
!
!
```

This display is output from the **show policy-map** command for the VMI and policy map configured on on Router 2.

```
Router2# show policy-map int vmi1
 vmi1

  Service-policy input: my-marker

    Class-map: udp-traffic (match-all)
      5971417 packets, 6150560540 bytes
      30 second offered rate 824000 bps, drop rate 0 bps
      Match: access-group 100
      QoS Set
        dscp ef
          Packets marked 5971418

    Class-map: class-default (match-any)
      26167 packets, 1623087 bytes
      30 second offered rate 0 bps, drop rate 0 bps
      Match: any
```

Additional References

The following sections provide references related to <<Feature>>.

Related Documents

Related Topic	Document Title
EIGRP	*Cisco IOS IP Routing Protocols Configuration Guide* and *Cisco IOS IP Routing Protocols Command Reference*
OSPF	*Cisco IOS IP Routing Protocols Configuration Guide* and *Cisco IOS IP Routing Protocols Command Reference*
PPPoE	*Cisco IOS Dial Solutions Configuration Guide* and *Cisco IOS Dial Solutions Command Reference*
IPv6	*Cisco IOS IPv6 Configuration Guide* and *Cisco IOS IPv6 Command Reference*
IPv6 Addressing	"Implementing IPv6 Addressing and Basic Connectivity" in the *Cisco IOS IPv6 Configuration Guide* http://www.cisco.com/en/US/products/ps6441/products_configuration_guide_chapter09186a00806f3a6a.html

Standards\

Standard	Title
None	—

MIBs

MIB	MIB Link
No new or modified MIBs are supported by this feature, and support for existing MIBs has not been modified by this feature.	To locate and download MIBs for selected platforms, Cisco IOS releases, and feature sets, use Cisco MIB Locator found at the following URL: http://www.cisco.com/go/mibs

RFCs

RFC	Title
RFC-4938	PPP Over Ethernet (PPPoE) Extensions for Credit Flow and Link Metrics

Technical Assistance

Description	Link
The Cisco Support website provides extensive online resources, including documentation and tools for troubleshooting and resolving technical issues with Cisco products and technologies. To receive security and technical information about your products, you can subscribe to various services, such as the Product Alert Tool (accessed from Field Notices), the Cisco Technical Services Newsletter, and Really Simple Syndication (RSS) Feeds. Access to most tools on the Cisco Support website requires a Cisco.com user ID and password.	http://www.cisco.com/techsupport

Commands Created or Modified for thie Feature.

The following commands were created or modified to support this feature:

- **debug eigrp notifications**
- **debug vmi**
- **eigrp interface**
- **interface vmi**
- **ipv6 ospf cost**
- **ipv6 ospf network**
- **mode bypass**
- **physical-interface**
- **show ipv6 ospf**
- **show ipv6 ospf interface**
- **show pppoe session**
- **show vmi neighbors**

Feature Information About the Mobile Ad Hoc Networks for Router-to-Radio Communications

Table 7 lists the features in this module and provides links to specific configuration information. Only features that were introduced or modified in Cisco IOS Release 12.3(14)T or a later release appear in the table., page 43

Not all commands may be available in your Cisco IOS software release. For release information about a specific command, see the command reference documentation.

Use Cisco Feature Navigator to find information about platform support and software image support. Cisco Feature Navigator enables you to determine which Cisco IOS and Catalyst OS software images support a specific software release, feature set, or platform. To access Cisco Feature Navigator, go to http://www.cisco.com/go/cfn. An account on Cisco.com is not required.

Note Table 7 lists only the Cisco IOS software release that introduced support for a given feature in a given Cisco IOS software release train. Unless noted otherwise, subsequent releases of that Cisco IOS software release train also support that feature.

Table 7 Feature Information for Mobil Ad Hoc Networks for Router-to-Radio Communications

Feature Name	Releases	Feature Information
PPPoE Support for Credit Flow and Metrics on Router-to-Radio Links Feature	12.4(15)XF 12.4(15)T	Credit-based flow control provides in-band and out-of-band credit grants in each direction. Link Quality Metrics are used to report link performance statistics that are then used to influence routing. The following sections provide information about this feature: • PPPoE Interfaces for Mobile Radio Communications, page 4 • PPPoE Credit-based Flow Control, page 13 • Configuration Examples for VMI PPPoE, page 36

Table 7 Feature Information for Mobil Ad Hoc Networks for Router-to-Radio Communications

Feature Name	Releases	Feature Information
OSPFv3 Dynamic Interface Cost Support	12.4(15)XF 12.4(15)T	OSPFv3 Dynamic Interface Cost Support provides enhancements to the OSPFv3 cost metric for supporting Mobile Adhoc Networking. The following section provides information about this feature; • OSPF Cost Calculation for VMI Interfaces, page 7
EIGRP L2/L3 API and Tunable Metric for Mobile Adhoc Networks	12.4(15)XF 12.4(15)T	EIGRP uses dynamic raw radio link characteristics (current and maximum bandwidth, latency, and resources) to compute a composite EIGRP metric. A tunable Hysteresis mechanism helps to avoid churn in the network as a result of the change in the link characteristics. In addition to the link characteristics, the L2L3 API provides an indication when a new adjacency is discovered, or an existing unreachable adjacency is again reachable. When EIGRP receives the adjacency signals, it responds with an immediate Hello out the specified interface to expedite the discovery of the EIGRP peer. The following section provides information about this feature: • Link Quality Metrics Reporting for OSPFv3 and EIGRP with VMI Interfaces, page 6 • Basic VMI PPPoE Configuration Using EIGRP for IPv6: Example, page 39 • VMI PPPoE Configuration Using EIGRP for IPv4 and IPv6: Example, page 42