PA-A1 ATM Port Adapter Installation and Configuration

Product Numbers: PA-A1-OC3SMI(=) and PA-A1-OC3MM(=)
Platforms Supported: Catalyst 5000 Family Switches with RSM/VIP2, Cisco 7100 Series, Cisco 7200 Series, Cisco uBR7200 Series, VIP2 and VIP4 in the Cisco 7000 Series and Cisco 7500 Series

Corporate Headquarters
Cisco Systems, Inc.
170 West Tasman Drive
San Jose, CA 95134-1706
USA
http://www.cisco.com
Tel: 408 526-4000
800 553-NETS (6387)
Fax: 408 526-4100

Text Part Number: OL-3455-01

The following information is for FCC compliance of Class A devices: This equipment has been tested and found to comply with the limits for a Class A digital device, pursuant to part 15 of the FCC rules. These limits are designed to provide reasonable protection against harmful interference when the equipment is operated in a commercial environment. This equipment generates, uses, and can radiate radio-frequency energy and, if not installed and used in accordance with the instruction manual, may cause harmful interference to radio communications. Operation of this equipment in a residential area is likely to cause harmful interference, in which case users will be required to correct the interference at their own expense.

The following information is for FCC compliance of Class B devices: The equipment described in this manual generates and may radiate radio-frequency energy. If it is not installed in accordance with Cisco's installation instructions, it may cause interference with radio and television reception. This equipment has been tested and found to comply with the limits for a Class B digital device in accordance with the specifications in part 15 of the FCC rules. These specifications are designed to provide reasonable protection against such interference in a residential installation. However, there is no guarantee that interference will not occur in a particular installation.

Modifying the equipment without Cisco's written authorization may result in the equipment no longer complying with FCC requirements for Class A or Class B digital devices. In that event, your right to use the equipment may be limited by FCC regulations, and you may be required to correct any interference to radio or television communications at your own expense.

You can determine whether your equipment is causing interference by turning it off. If the interference stops, it was probably caused by the Cisco equipment or one of its peripheral devices. If the equipment causes interference to radio or television reception, try to correct the interference by using one or more of the following measures:

• Turn the television or radio antenna until the interference stops.

• Move the equipment to one side or the other of the television or radio.

• Move the equipment farther away from the television or radio.

• Plug the equipment into an outlet that is on a different circuit from the television or radio. (That is, make certain the equipment and the television or radio are on circuits controlled by different circuit breakers or fuses.)

Modifications to this product not authorized by Cisco Systems, Inc. could void the FCC approval and negate your authority to operate the product.

PA-A1 ATM Port Adapter Installation and Configuration

Preface vii

Objectives vii

Organization viii

Related Documentation viii

Obtaining Documentation x

World Wide Web x

Documentation CD-ROM x

Ordering Documentation x

Documentation Feedback x

Obtaining Technical Assistance xi

Cisco.com xi

Technical Assistance Center xi

Cisco TAC Web Site xii

Cisco TAC Escalation Center xii

CHAPTER 1

Overview 1-1

Port Adapter Overview 1-1

Asynchronous Transfer Mode Overview 1-2

Features 1-3

LEDs 1-3

Cables and Connectors 1-4

Management Information Base 1-5

Port Adapter Slot Locations on the Supported Platforms 1-5

Catalyst RSM/VIP2 Slot Numbering 1-5

Cisco 7100 Series Routers Slot Numbering 1-6

Cisco 7200 Series and Cisco uBR7200 Series Routers Slot Numbering 1-7

VIP2 and VIP4 Slot Numbering 1-8

Identifying Interface Addresses 1-9

Catalyst RSM/VIP2 Interface Addresses 1-10

Cisco 7100 Series Routers Interface Addresses 1-10

Cisco 7200 Series and Cisco uBR7200 Series Routers Interface Addresses 1-10

VIP2 and VIP4 Interface Addresses 1-11

CHAPTER 2 **Preparing for Installation** 2-1

Required Tools and Equipment 2-1

Software and Hardware Requirements 2-1

Checking Hardware and Software Compatibility 2-3

Safety Guidelines 2-3

Safety Warnings 2-3

Single-Mode Transmitter Warning 2-5

Electrical Equipment Guidelines 2-5

Telephone Wiring Guidelines 2-6

Preventing Electrostatic Discharge Damage 2-6

FCC Class A Compliance 2-7

CHAPTER 3 **Removing and Installing Port Adapters** 3-1

Handling Port Adapters 3-1

Online Insertion and Removal 3-2

Warnings and Cautions 3-3

Port Adapter Removal and Installation 3-3

Catalyst RSM/VIP2—Removing and Installing a Port Adapter 3-5

Cisco 7100 Series—Removing and Installing a Port Adapter 3-6

Cisco 7200 Series—Removing and Installing a Port Adapter 3-7

Cisco uBR7200 Series—Removing a Port Adapter 3-8

Cisco uBR7200 Series—Installing a Port Adapter 3-9

VIP2 and VIP4 —Removing and Installing a Port Adapter 3-10

CHAPTER 4 **Attaching the PA-A1 ATM Interface Cables** 4-1

Connecting an Interface Cable 4-1

SONET Distance Limitations 4-2

Determining the Power Budget 4-3

Approximating the PA-A1 ATM Power Margin 4-3

Multimode Power Budget Example with Sufficient Power for Transmission 4-4

Multimode Power Budget Example of Dispersion Limit 4-5

Single-Mode Transmission 4-5

SONET Single-Mode Power Budget Example 4-5

Using Statistics to Estimate the Power Budget 4-6

CHAPTER 5 **Configuring the PA-A1 ATM** 5-1

Using the EXEC Command Interpreter 5-1

Configuring the Interfaces 5-2
Shutting Down an Interface 5-2
Performing a Basic Configuration 5-6
Virtual Circuits 5-8
Configuring Permanent Virtual Circuits 5-9
Creating a PVC 5-9
Mapping a Protocol Address to a PVC 5-10
Configuring Switched Virtual Circuits 5-11
Maintaining PA-A1 ATM Statistics 5-11
Checking the Configuration 5-12
Using show Commands to Verify the New Interface Status 5-12
Using the show version or show hardware Commands 5-14
Using the show diag Command 5-16
Using the show interfaces Command 5-18
Using show Commands to Display ATM Information 5-20
Using the Debug ATM Commands 5-21
ATM Configuration Examples 5-21
Example of PVCs with AAL5 and LLC/SNAP Encapsulation 5-22
Example of PVCs in a Fully Meshed Network 5-23
Example of SVCs in a Fully Meshed Network 5-24
Example of Connecting Two ATM Port Adapters Back-to-Back 5-24
Using the ping Command to Verify Network Connectivity 5-25
Configuring an ATM Interface for Local Loopback 5-26

Preface

This preface describes the objectives and organization of this document and explains how to find additional information on related products and services. This preface contains the following sections:

- Objectives, page vii
- Organization, page viii
- Related Documentation, page viii
- Obtaining Documentation, page x
- Obtaining Technical Assistance, page xi

Objectives

This document describes how to install and configure the A1 ATM port adapter (PA-A1-OC3SMI[=], PA-A1-OC3MM[=]), hereafter referred to as the PA-A1 ATM, which is used in the following platforms:

- Catalyst 5000 family switches with the Route Switch Module (RSM)/ second-generation Versatile Interface Processor (VIP2)
- Cisco 7100 series routers, consisting of the Cisco 7120 series and Cisco 7140 series
- Cisco 7200 series routers, consisting of the two-slot Cisco 7202, four-slot Cisco 7204, and Cisco 7204VXR, and the six-slot Cisco 7206 and the Cisco 7206VXR
- Cisco uBR7200 series universal broadband routers, consisting of the six-slot Cisco uBR7246 and the three-slot Cisco uBR7223
- Second-generation Versatile Interface Processor (VIP2) in Cisco 7500 series and Cisco 7000 series routers with the 7000 Series Route Switch Processor (RSP7000) and 7000 Series Chassis Interface (RSP7000CI)
- Fourth-generation Versatile Interface Processor (VIP4) in Cisco 7500 series and Cisco 7000 series routers with the 7000 Series Route Switch Processor (RSP7000) and 7000 Series Chassis Interface (RSP7000CI)

Note The Cisco 7206 and Cisco 7206VXR can be used as router shelves in a Cisco AS5800 Universal Access Server. For information about the Cisco 7206 and Cisco 7206VXR as router shelves, refer to the Cisco AS5800 Universal Access Server documentation listed in the “Related Documentation” section on page viii.

Organization

This document note contains the following chapters:

Section	Title	Description
Chapter 1	Overview	Describes the PA-A1 ATM and its LED displays, cables, and receptacles.
Chapter 2	Preparing for Installation	Describes safety considerations, tools required, and procedures you should perform before the actual installation.
Chapter 3	Removing and Installing Port Adapters	Describes the procedures for installing and removing PA-A1 ATM port adapters in the supported platforms.
Chapter 4	Attaching the PA-A1 ATM Interface Cables	Provides instructions for connecting port adapter cables on the supported platforms.
Chapter 5	Configuring the PA-A1 ATM	Provides instructions for configuring the PA-A1 ATM on the supported platforms.

Related Documentation

Your router and the Cisco IOS software running on it contain extensive features and functionality, which are documented in the following resources:

- Cisco IOS software:

  For configuration information and support, refer to the modular configuration and modular command reference publications in the Cisco IOS software configuration documentation set that corresponds to the software release installed on your Cisco hardware.

  Note You can access Cisco IOS software configuration and hardware installation and maintenance documentation on the World Wide Web at http://www.cisco.com, http://www-china.cisco.com, or http://www-europe.cisco.com.

- Catalyst RSM/VIP2:

  For hardware installation and maintenance information, refer to the following publications:

  – Route Switch Module Catalyst VIP2-15 and VIP2-40 Installation and Configuration Note

  – Catalyst 5000 Series Route Switch Module Installation and Configuration Note

  – The installation and configuration guide that shipped with your Catalyst 5000 family switch

- Cisco 7100 series routers:

  – For hardware installation and maintenance information, refer to the *Cisco 7100 Series VPN Router Installation and Configuration Guide* that shipped with your Cisco 7100 series router.

  – For information on setting up a Virtual Private Network, refer to the *Cisco 7100 Series VPN Configuration Guide*

- Cisco 7200 series routers:

  - For port adapter hardware and memory configuration guidelines, refer to the *Cisco 7200 Series Port Adapter Hardware Configuration Guidelines*.
  - For hardware installation and maintenance information (including the Cisco 7206 or Cisco 7206VXR as a router shelf in a Cisco AS5800 Universal Access Server), refer to the installation and configuration guide that shipped with your Cisco 7200 series router.
- Cisco 7200 VXR routers:

  For hardware installation and maintenance information, refer to the *Cisco 7200 VXR Installation and Configuration Guide* that shipped with your Cisco 7200 VXR router.
- Cisco uBR7200 series routers:

  For hardware installation and maintenance information, refer to the installation and configuration guide that shipped with your Cisco uBR7200 series router.
- VIP2 in Cisco 7000 series and Cisco 7500 series routers:

  For hardware installation and maintenance information, refer to the following publications:
  - The installation and configuration guide that shipped with your Cisco 7000 series or Cisco 7500 series router
  - Second-Generation Versatile Interface Processor (VIP2) Installation and Configuration
- VIP4 in Cisco 7000 series and Cisco 7500 series routers:

  For hardware installation and maintenance information, refer to the following publications:
  - The installation and configuration guide that shipped with your Cisco 7000 series or Cisco 7500 series router
  - Fourth-Generation Versatile Interface Processor (VIP4) Installation and Configuration
- Determining Attenuation and Power Budget
  - T1E1.2/92-020R2 ANSI, the Draft American National Standard for Telecommunications entitled “Broadband ISDN Customer Installation Interfaces: Physical Layer Specification.”
  - *Power Margin Analysis, AT&T Technical Note,* TN89-004LWP, May 1989
- For international agency compliance, safety, and statutory information for WAN interfaces:
  - Site Preparation and Safety Guide
  - Regulatory Compliance and Safety Information for the Cisco 7000 Series Routers
  - Regulatory Compliance and Safety Information for Cisco 7100 Series VPN Routers
  - Regulatory Compliance and Safety Information for the Cisco 7200 Series Routers
  - “Regulatory Compliance and Safety Information” appendix *in the Cisco uBR7200 Series Universal Broadband Router Hardware Installation Guide*
  - Regulatory Compliance and Safety Information for the Cisco 7500 Series Routers
- To view Cisco documentation or obtain general information about the documentation, refer to the following sources:
  - “Obtaining Documentation” section on page x
  - “Obtaining Technical Assistance” section on page xi
  - Customer Service at 800 553-6387 or 408 526-7208. Customer Service hours are 5:00 a.m. to 6:00 p.m. Pacific time, Monday through Friday (excluding Cisco-observed holidays). You can also send e-mail to cs-rep@cisco.com.
  - *Cisco Information Packet* that shipped with your router.

Obtaining Documentation

These sections explain how to obtain documentation from Cisco Systems.

World Wide Web

You can access the most current Cisco documentation on the World Wide Web at this URL:

http://www.cisco.com

Translated documentation is available at this URL:

http://www.cisco.com/public/countries_languages.shtml

Documentation CD-ROM

Cisco documentation and additional literature are available in a Cisco Documentation CD-ROM package, which is shipped with your product. The Documentation CD-ROM is updated monthly and may be more current than printed documentation. The CD-ROM package is available as a single unit or through an annual subscription.

Ordering Documentation

You can order Cisco documentation in these ways:

- Registered Cisco.com users (Cisco direct customers) can order Cisco product documentation from the Networking Products MarketPlace:

  http://www.cisco.com/cgi-bin/order/order_root.pl

- Registered Cisco.com users can order the Documentation CD-ROM through the online Subscription Store:

  http://www.cisco.com/go/subscription

- Nonregistered Cisco.com users can order documentation through a local account representative by calling Cisco Systems Corporate Headquarters (California, U.S.A.) at 408 526-7208 or, elsewhere in North America, by calling 800 553-NETS (6387).

Documentation Feedback

You can submit comments electronically on Cisco.com. In the Cisco Documentation home page, click the **Fax** or **Email** option in the “Leave Feedback” section at the bottom of the page.

You can e-mail your comments to bug-doc@cisco.com.

You can submit your comments by mail by using the response card behind the front cover of your document or by writing to the following address:

Cisco Systems
Attn: Document Resource Connection
170 West Tasman Drive
San Jose, CA 95134-9883

We appreciate your comments.

Obtaining Technical Assistance

Cisco provides Cisco.com as a starting point for all technical assistance. Customers and partners can obtain online documentation, troubleshooting tips, and sample configurations from online tools by using the Cisco Technical Assistance Center (TAC) Web Site. Cisco.com registered users have complete access to the technical support resources on the Cisco TAC Web Site.

Cisco.com

Cisco.com is the foundation of a suite of interactive, networked services that provides immediate, open access to Cisco information, networking solutions, services, programs, and resources at any time, from anywhere in the world.

Cisco.com is a highly integrated Internet application and a powerful, easy-to-use tool that provides a broad range of features and services to help you with these tasks:

- Streamline business processes and improve productivity
- Resolve technical issues with online support
- Download and test software packages
- Order Cisco learning materials and merchandise
- Register for online skill assessment, training, and certification programs

If you want to obtain customized information and service, you can self-register on Cisco.com. To access Cisco.com, go to this URL:

http://www.cisco.com

Technical Assistance Center

The Cisco Technical Assistance Center (TAC) is available to all customers who need technical assistance with a Cisco product, technology, or solution. Two levels of support are available: the Cisco TAC Web Site and the Cisco TAC Escalation Center.

Cisco TAC inquiries are categorized according to the urgency of the issue:

- Priority level 4 (P4)—You need information or assistance concerning Cisco product capabilities, product installation, or basic product configuration.
- Priority level 3 (P3)—Your network performance is degraded. Network functionality is noticeably impaired, but most business operations continue.
- Priority level 2 (P2)—Your production network is severely degraded, affecting significant aspects of business operations. No workaround is available.
- Priority level 1 (P1)—Your production network is down, and a critical impact to business operations will occur if service is not restored quickly. No workaround is available.

The Cisco TAC resource that you choose is based on the priority of the problem and the conditions of service contracts, when applicable.

Cisco TAC Web Site

You can use the Cisco TAC Web Site to resolve P3 and P4 issues yourself, saving both cost and time. The site provides around-the-clock access to online tools, knowledge bases, and software. To access the Cisco TAC Web Site, go to this URL:

http://www.cisco.com/tac

All customers, partners, and resellers who have a valid Cisco service contract have complete access to the technical support resources on the Cisco TAC Web Site. The Cisco TAC Web Site requires a Cisco.com login ID and password. If you have a valid service contract but do not have a login ID or password, go to this URL to register:

http://www.cisco.com/register/

If you are a Cisco.com registered user, and you cannot resolve your technical issues by using the Cisco TAC Web Site, you can open a case online by using the TAC Case Open tool at this URL:

http://www.cisco.com/tac/caseopen

If you have Internet access, we recommend that you open P3 and P4 cases through the Cisco TAC Web Site.

Cisco TAC Escalation Center

The Cisco TAC Escalation Center addresses priority level 1 or priority level 2 issues. These classifications are assigned when severe network degradation significantly impacts business operations. When you contact the TAC Escalation Center with a P1 or P2 problem, a Cisco TAC engineer automatically opens a case.

To obtain a directory of toll-free Cisco TAC telephone numbers for your country, go to this URL:

http://www.cisco.com/warp/public/687/Directory/DirTAC.shtml

Before calling, please check with your network operations center to determine the level of Cisco support services to which your company is entitled: for example, SMARTnet, SMARTnet Onsite, or Network Supported Accounts (NSA). When you call the center, please have available your service agreement number and your product serial number.

Overview

This chapter describes the PA-A1 ATM port adapter and contains the following sections:

- Port Adapter Overview, page 1-1
- Asynchronous Transfer Mode Overview, page 1-2
- Features, page 1-3
- LEDs, page 1-3
- Cables and Connectors, page 1-4
- Management Information Base, page 1-5
- Port Adapter Slot Locations on the Supported Platforms, page 1-5
- Identifying Interface Addresses, page 1-9

Port Adapter Overview

The PA-A1 ATM (see Figure 1-1 and Figure 1-2) is an ATM (OC-3 rate) protocol control information (PCI)-based, multimode or single-mode, intermediate reach, single-width port adapter. The PA-A1 ATM provides a single ATM network interface for the supported platforms.

Figure 1-1 PA-A1 ATM—Faceplate View (PA-A1-OC3SMI Shown)

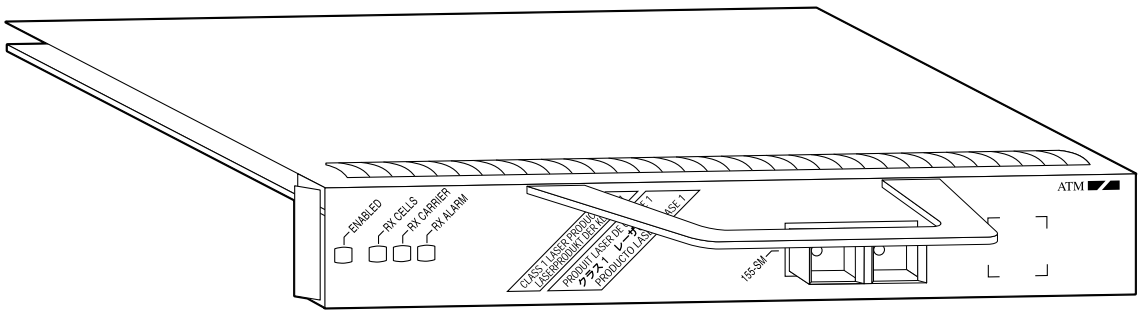

Figure 1-2 PA-A1 ATM—Faceplate View (Multimode PA-A1-OC3MM Shown)

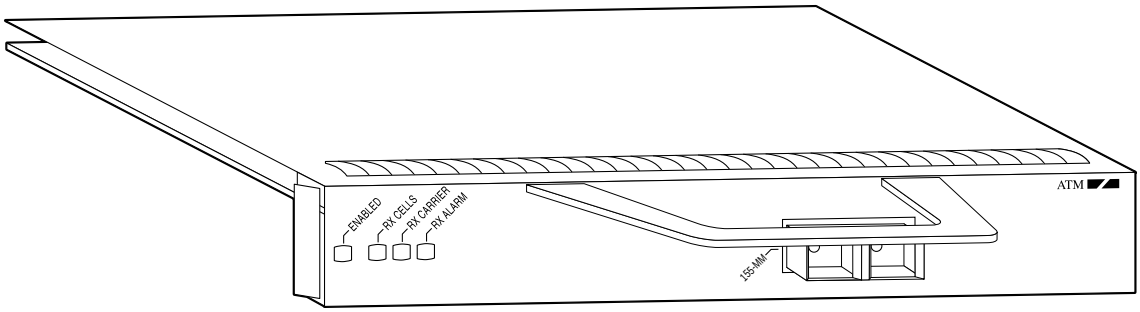

There are no restrictions on slot locations or sequence; you can install a PA-A1 ATM in any available port adapter slot.

Note Traffic from multiple ATM network interfaces might exceed the bandwidth of the CyBus (VIP2 and VIP4 only), causing packets to be dropped. Although up to five ATM port adapters can be used in a Cisco 7000 series and Cisco 7500 series router (a Cisco 7513 can have up to 11 VIP2s or VIP4s), two ATM port adapter modules per a Cisco 7000 series router or a Cisco 7500 series router is considered to be a practical limit.

Asynchronous Transfer Mode Overview

Asynchronous Transfer Mode (ATM) uses cell-switching and multiplexing technology that combines the benefits of circuit switching (constant transmission delay and guaranteed capacity) with those of packet switching (flexibility and efficiency for intermittent traffic).

ATM is a connection-oriented environment. All traffic to or from an ATM network is prefaced with a virtual path identifier (VPI) and virtual channel identifier (VCI). A VPI/VCI pair is considered a single virtual circuit (VC). Each VC is a private connection to another node on the ATM network. It is treated as a point-to-point mechanism to another router or host and is capable of supporting bidirectional traffic.

Each ATM node is required to establish a separate connection to every other node in the ATM network with which it must communicate. All such connections are established using a permanent virtual circuit (PVC) or a switched virtual circuit (SVC) with an ATM signaling mechanism. This signaling is based on the ATM Forum User-Network Interface (UNI) Specification V3.0.

Each VC is considered a complete and separate link to a destination node. Users can encapsulate data across the connection as they see fit. The ATM network disregards the contents of the data. The only requirement is that data be sent to the PA-A1 ATM card in the specific ATM adaptation layer (AAL) format.

An AAL defines the conversion of user information into cells. The AAL segments upper-layer information into cells at the transmitter and reassembles them at the receiver. ATM adaption layer 5 (AAL5), one of four AALs recommended by the International Telecommunication Union Telecommunication Standardization Sector, supports data communications.

An ATM connection transfers raw bits of information to a destination router or host. The ATM router takes the common part convergence sublayer (CPCS) frame, carves it up into 53-byte cells, and sends these cells to the destination router or host for reassembly. 48 bytes of each cell are used for the CPCS data; the remaining 5 bytes are used for cell routing. The 5-byte cell header contains the destination VPI/VCI, payload type, cell loss priority (CLP), and header error control.

Unlike a LAN, which is connectionless, ATM requires certain features to provide a LAN environment to the users. One such feature is broadcast capability. Protocols wanting to broadcast packets to all stations in a subnet must be allowed to do so with a single call to Layer 2. In order to support broadcasting, the router allows you to specify a particular VC as a broadcast VC. When the protocol passes a packet with a broadcast address to the ATM driver, the packet is duplicated and sent to each VC marked as a broadcast VC. This method is known as *pseudobroadcasting*.

Features

The PA-A1 ATM supports the following features:

- Segmentation and reassembly (SAR) of up to 512 buffers simultaneously, where each buffer represents a packet
- Up to 256 transmit buffers for simultaneous fragmentation
- Up to 2048 SAR virtual circuits (VCs)
- ATM adaptation layer (AAL) 5
- Two physical layers: SONET/SDH OC-3 multimode and SONET/SDH OC-3 single-mode intermediate reach
- Operation, administration, and maintenance (OAM) cells
- Online insertion and removal (OIR)

The PA-A1 ATM supports the following dynamic random-access memory (DRAM) and synchronous random-access memory (SRAM) configurations that are in the current VIP2 and VIP4 products:

- VIP2-40(=)—2 MB of SRAM and 32 MB of DRAM
- VIP2-50(=)—4 to 8 MB of SRAM and 32 to 128 MB of DRAM

The PA-A1 ATM supports the following DRAM and SRAM configurations that are in the current Catalyst RSM/VIP2 products:

- VIP2-15(=)—1 MB of SRAM and 16 MB of DRAM
- VIP2-40(=)—2 MB of SRAM and 32 MB of DRAM

Note You can have only one PA-A1 ATM per VIP2 or VIP4, and Catalyst RSM/VIP2. No other port adapter can reside in the other port adapter slot on the VIP2, VIP4, or Catalyst RSM/VIP2. (This restriction is subject to change without notice.)

LEDs

The PA-A1 ATM (both single-mode and multimode) has one row of three status LEDs and one enabled LED. (See Figure 1-3.) The green- and amber-colored LED for each port indicates port status.

Figure 1-3 LEDs on the PA-A1 ATM—Partial Front Panel View

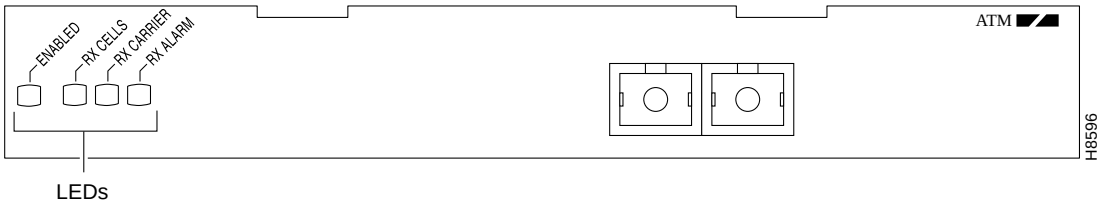

After system initialization, the enabled LED goes on to indicate that the port adapter has been enabled for operation.

The following conditions must be met before the PA-A1 ATM is enabled:

- The PA-A1 ATM is correctly connected and is receiving power.
- A valid system software image for the port adapter has been downloaded successfully.
- The system recognizes the PA-A1 ATM, a Catalyst RSM/VIP2 with a PA-A1-ATM, or a VIP2 or a VIP4 with a PA-A1 ATM.

If any of the above conditions are not met, or if the initialization fails for other reasons, the enabled LED does not go on.

Table 1-1 lists LED colors and indications.

Table 1-1 PA-A1 ATM LEDs

LED Label	Color	State	Meaning
ENABLED	Green	On	Port adapter is enabled for operation.
RX CELLS	Green	On[1]	Port adapter has received an ATM cell.
RX CARRIER	Green	On	Port adapter has detected a carrier on the receiver cable.[2]
RX ALARM	Green	On	Router has detected an alarm condition.

1. This LED flickers in normal operation, indicating traffic.
2. For a fiber-optic interface, this means that light is detected.

Cables and Connectors

ATM port adapter interfaces are full-duplex. You must use the appropriate ATM interface cable to connect the PA-A1 ATM with an external ATM network. The PA-A1 ATM, shown in Figure 1-1 and Figure 1-2, provides an interface to ATM switching fabrics for transmitting and receiving data at rates of up to 155 Mbps bidirectionally. The PA-A1 ATM connects to the SONET/SDH 155 Mbps multimode or single-mode optical fiber—STS-3 or STM-1 physical layer.

An OC-3 ATM interface cable, which is used to connect your router to an external DSU (an ATM network), is available for use with the PA-A1 ATM.

Note The ATM port on the PA-A1 ATM is considered to be a DTE device.

For SONET/SDH multimode and SONET/STC-3 single-mode connections, use one duplex SC connector (see Figure 1-4) or two single SC connectors (see Figure 1-5). The SONET simplex and duplex SC connectors are shipped with removable dust covers on each connector.

Figure 1-4 Duplex SC Connector

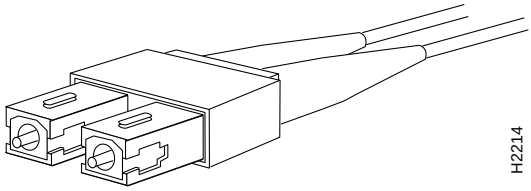

Figure 1-5 Simplex SC Connector

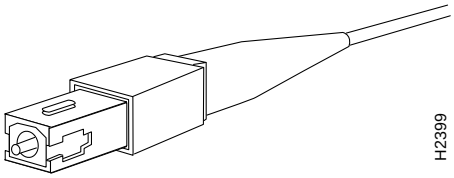

Single-mode and multimode cables should perform to the following specifications:

Standard	Maximum Path Length	Cabling
ISO/IEC 9314-3	2 km (all cables in a connection, end-to-end)	62.5-micron core with an optical loss of 0 to 9 dB, or 50-micron core with an optical loss of 7 dB

Note A single fiber link should not mix 62.5- and 50-micron core cable.

Management Information Base

The ATM UNI specification defines the required Management Information Base (MIB) functionality for ATM interfaces. MIB attributes are readable and writable across the Interim Local Management Interface (ILMI) using a Simple Network Management Protocol (SNMP). The ILMI uses SNMP, without User Datagram Protocol (UDP), and IP addressing along with the ATM MIB.

The PA-A1 ATM supports RFC 1213 interface MIBs as specified in the ATM MIB V2 specification. Refer to the ATM UNI specification for additional details on the MIB.

Port Adapter Slot Locations on the Supported Platforms

This section discusses port adapter slot locations on the supported platforms. The illustrations that follow summarize slot location conventions on each platform.

Catalyst RSM/VIP2 Slot Numbering

The Catalyst RSM/VIP2 can be installed in any slot except the top slots, which contain the supervisor engine modules. The Catalyst RSM/VIP2 in a Catalyst 5000 family switch does not use interface processor slot numbering; therefore, slots are not numbered in Figure 1-6.

Note You can have only one ATM port adapter per Catalyst RSM/VIP2 on a Catalyst 5000 family switch. No other port adapter can reside in the other port adapter slot on the Catalyst RSM/VIP2.

Note The Catalyst 5500 switch has 13 slots. Slot 1 is reserved for the supervisor engine module. If a redundant supervisor engine module is used, it would go in slot 2; otherwise, slot 2 can be used for other modules. Slot 13 is a dedicated slot, reserved for the ATM Switch Processor (ASP) module. Refer to the *Catalyst 5000 Series Route Switch Module Installation and Configuration Note* for any additional slot restrictions for the Catalyst RSM/VIP2.

Figure 1-6 Catalyst 5000 Family Switch with Blank Port Adapters Installed on Catalyst RSM/VIP2

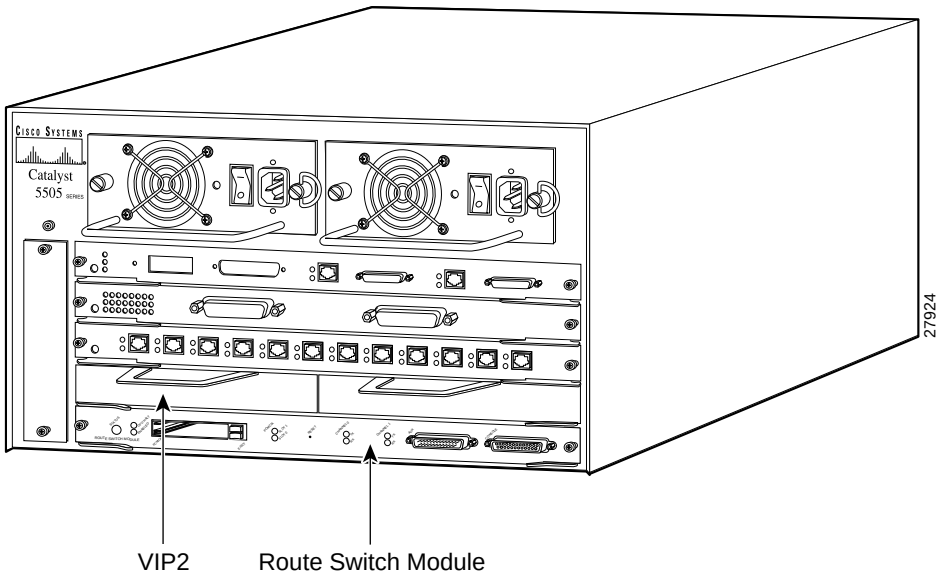

Cisco 7100 Series Routers Slot Numbering

The PA-A1 ATM can be installed in port adapter slot 3 in Cisco 7120 series routers, and in port adapter slot 4 in Cisco 7140 series routers. Figure 1-7 shows a Cisco 7120 with a port adapter installed in slot 3. Figure 1-8 shows a Cisco 7140 with a port adapter installed in slot 4.

Figure 1-7 Port Adapter Slots in the Cisco 7100 Series Router—Cisco 7120 Series

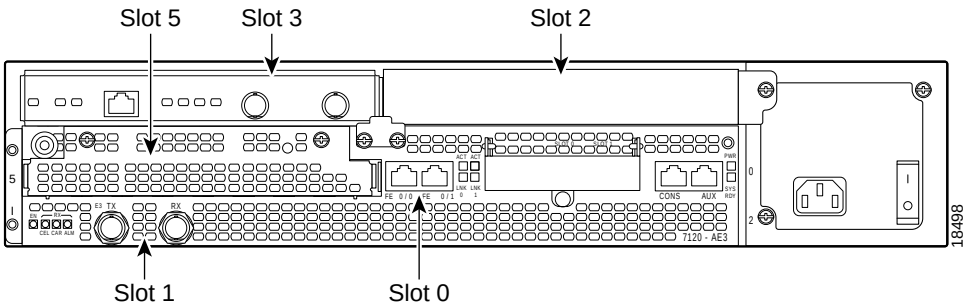

Figure 1-8 Port Adapter Slots in the Cisco 7100 Series Router—Cisco 7140 Series

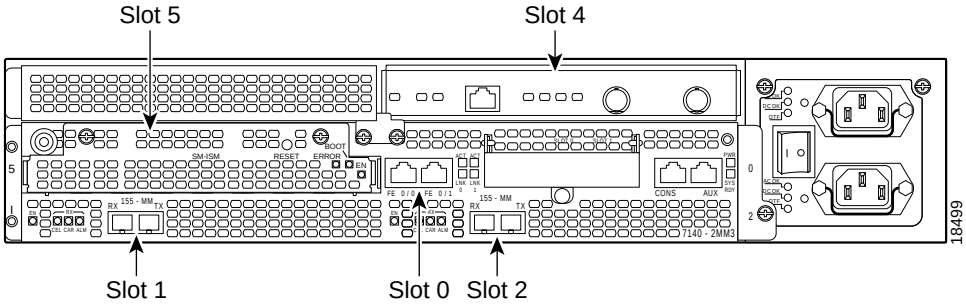

Cisco 7200 Series and Cisco uBR7200 Series Routers Slot Numbering

Figure 1-9 shows a Cisco 7206 with port adapters installed. In the Cisco 7206 (including the Cisco 7206 and 7206VXR as router shelves in a Cisco AS5800 Universal Access Server), port adapter slot 1 is in the lower left position, and port adapter slot 6 is in the upper right position. (The Cisco 7202 and Cisco 7204 are not shown; however, the PA-A1 ATM can be installed in any available port adapter slot.)

Figure 1-9 Port Adapter Slots in the Cisco 7206

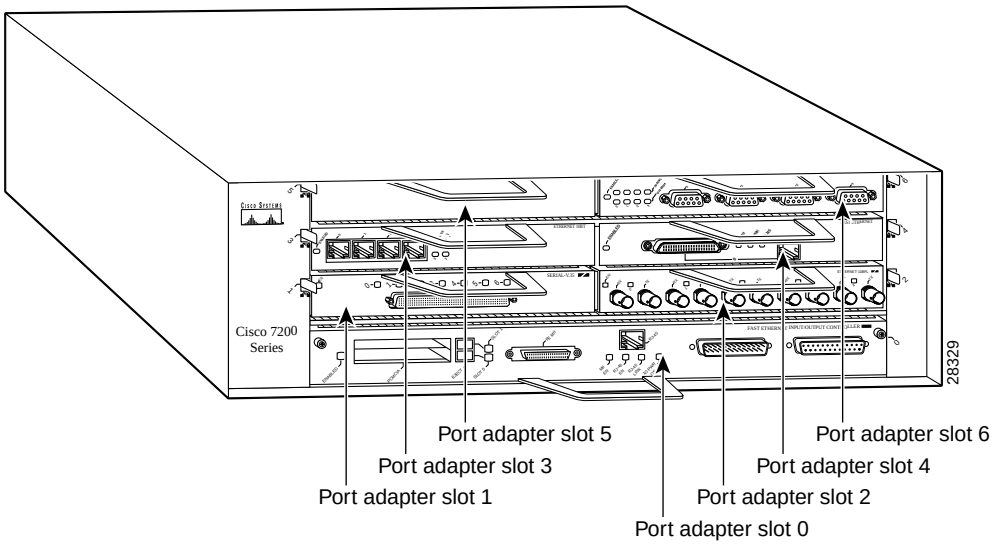

Figure 1-10 shows the slot numbering of port adapters in the Cisco uBR7246 and Cisco uBR7246VXR routers. The port adapter slots are numbered slot 1 and slot 2 for the Cisco uBR7246 and Cisco uBR7246VXR routers and slot 1 for the Cisco uBR7223. (Slot 0 is always reserved for the Fast Ethernet port on the I/O controller—if present.)

Figure 1-10 Port Adapter Slots in the Cisco uBR7246

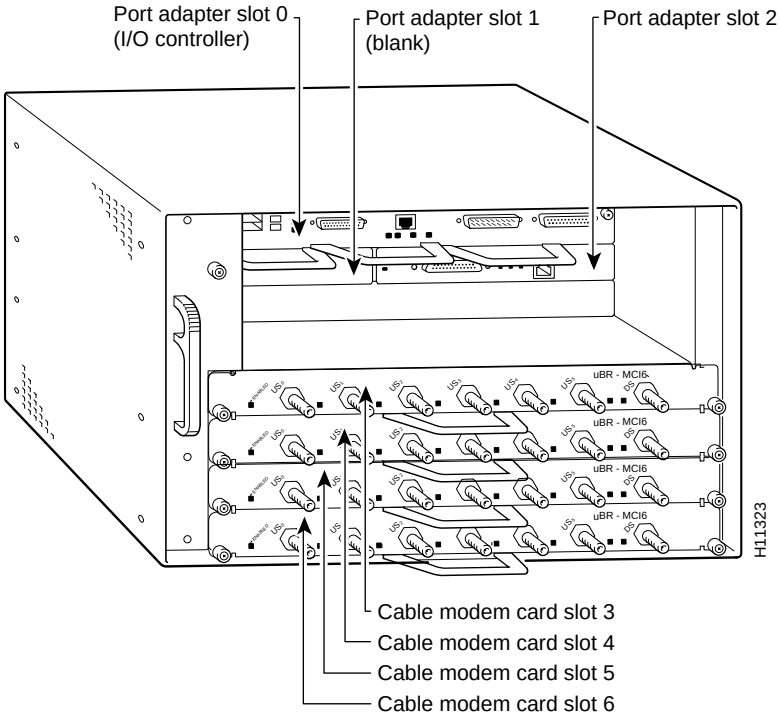

VIP2 and VIP4 Slot Numbering

Figure 1-11 shows a VIP motherboard with installed port adapters. With the motherboard oriented as shown in Figure 1-11, the left port adapter is in port adapter slot 0, and the right port adapter is in port adapter slot 1. The slot numbering is the same for the Catalyst RSM/VIP2. The slots are always numbered 0 and 1.

Figure 1-11 VIP Motherboard with Two Port Adapters Installed—Horizontal Orientation Shown

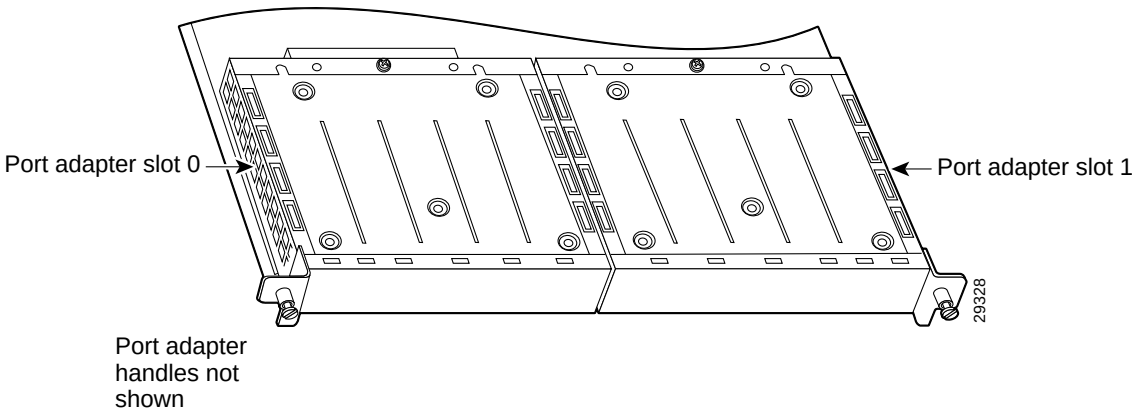

Note In the Cisco 7000, Cisco 7507, and Cisco 7513 chassis, the VIP motherboard is installed vertically. In the Cisco 7010 and Cisco 7505 chassis, the VIP motherboard is installed horizontally.

Interface processor slots are numbered as show in Figure 1-12.

Figure 1-12 Interface Slot Numbers—Cisco 7505 shown

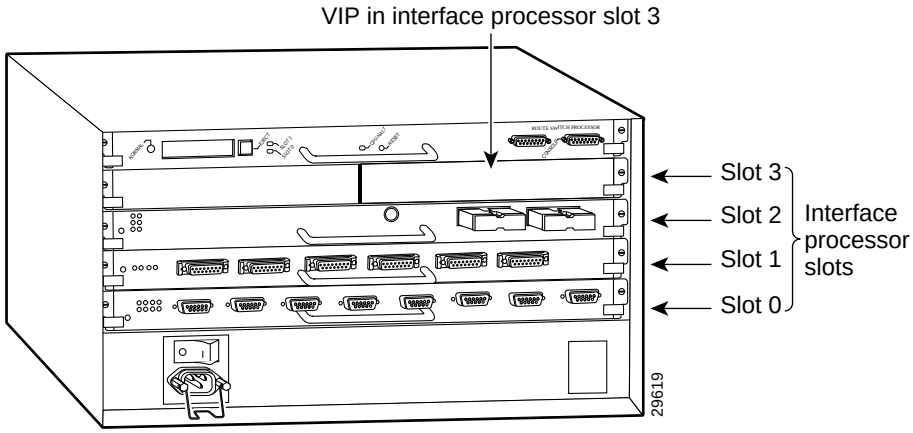

Identifying Interface Addresses

This section describes how to identify interface addresses for the PA-A1 ATM in supported platforms. Interface addresses specify the actual physical location of each interface on a router or switch.

Interfaces on the PA-A1 ATM installed in a router maintain the same address regardless of whether other port adapters are installed or removed. However, when you move a port adapter to a different slot, the first number in the interface address changes to reflect the new port adapter slot number.

Interfaces on a PA-A1 ATM installed in a VIP2 or a VIP4 maintain the same address regardless of whether other interface processor slot number changes to reflect the new interface processor slot.

Note Interface ports are numbered from left to right starting with 0.

Table 1-2 explains how to identify interface addresses.

Table 1-2 Identifying Interface Addresses

Platform	Interface Address Format	Numbers	Syntax
Catalyst RSM/VIP2 in Catalyst 5000 family switches	Port-adapter-slot-number/interface-port-number	Port adapter slot: 0 or 1	`0/0`
Cisco 7120 series routers	Port-adapter-slot-number/interface-port-number	Port adapter slot: Always 3 Interface port: Always 0	`3/0`
Cisco 7140 series routers	Port-adapter-slot-number/interface-port-number	Port adapter slot: Always 4 Interface port: Always 0	`4/0`
Cisco 7200 series routers	Port-adapter-slot-number/interface-port-number	Port adapter slot: 1 through 6 Interface port: Always 0	`3/0`

Table 1-2 Identifying Interface Addresses (continued)

Platform	Interface Address Format	Numbers	Syntax
Cisco uBR7223 router	Port-adapter-slot-number/interface-port-number	Port adapter slot: Always 1 Interface port: Always 0	`1/0`
Cisco uBR7246 router	Port-adapter-slot-number/interface-port-number	Port adapter slot: 1 or 2[1] Interface port: Always 0	`2/0`
VIP2 or VIP4 in Cisco 7000 series or Cisco 7500 series routers	Interface-processor-slot-number/port-adapter-slot-number/ interface-port-number	Interface processor slot: 0 through 12 (depends on the number of slots on the router) Port adapter slot: Always 0 or 1 Interface port: Always 0	`3/0/0`

1. Port adapter slot 0 is reserved for the Fast Ethernet port on the I/O controller (if present).

Catalyst RSM/VIP2 Interface Addresses

This section describes how to identify the interface addresses used for the PA-A1 ATM on the Catalyst RSM/VIP2 in Catalyst 5000 family switches. The interface address is composed of a two-part number in the format *port-adapter-slot-number/interface-port-number.*

See Table 1-2 for the interface address format.

Cisco 7100 Series Routers Interface Addresses

This section describes how to identify the interface addresses used for the PA-A1 ATM in Cisco 7100 series routers. The interface address is composed of a two-part number in the format *port-adapter-slot-number/interface-port-number.* See Table 1-2 for the interface address format.

Cisco 7200 Series and Cisco uBR7200 Series Routers Interface Addresses

This section describes how to identify the interface addresses used for the PA-A1 ATM in Cisco 7200 series routers or Cisco uBR7200 series routers. The interface address is composed of a two-part number in the format *port-adapter-slot-number/interface-port-number.* See Table 1-2 for the interface address format.

In Cisco 7200 series routers, port adapter slots are numbered from the lower left to the upper right, beginning with port adapter slot 1 and continuing through slot 2 for the Cisco 7202, slot 4 for the Cisco 7204 and Cisco 7204VXR, and slot 6 for the Cisco 7206 and Cisco 7206VXR. (Port adapter slot 0 is reserved for the optional Fast Ethernet port on the I/O controller—if present.)

The interface address of the interface on the PA-A1 ATM in port adapter slot 1 is 1/0 (port adapter slot 1 and interface 0). If the PA-A1 ATM was in port adapter slot 3, this same interface would be numbered 3/0 (port adapter slot 3 and interface 0.)

In Cisco uBR7200 series routers, the port adapter slots are numbered slot 1 and slot 2 for the Cisco uBR7246 and slot 1 for the Cisco uBR7223 (slot 0 is always reserved for the Fast Ethernet port on the I/O controller—if present). The individual interface port numbers always begin with 0. The number of additional ports depends on the number of ports on a port adapter.

The interface address of the interface on a PA-A1 ATM in port adapter slot 2 is 2/0 (port adapter slot 2 and interface 0). If the PA-A1 ATM was in port adapter slot 1, these same interface would be numbered 1/0 (port adapter slot 1 and interface 0).

VIP2 and VIP4 Interface Addresses

This section describes how to identify the interface addresses used by the PA-A1 ATM on a VIP2 or on a VIP4 in Cisco 7000 series and Cisco 7500 series routers.

Note Although the processor slots in the seven-slot Cisco 7000 and Cisco 7507 and thirteen-slot Cisco 7513 are vertically oriented and the slots in the five-slot Cisco 7010 and Cisco 7505 are horizontally oriented, all Cisco 7000 series and Cisco 7500 series routers use the same method for slot and port numbering.

See Table 1-2 for the interface address format. The interface address is composed of a three-part number in the format *interface-processor-slot-number/port-adapter-slot-number/interface-port-number*.

If the VIP2 or VIP4 is inserted in interface processor slot 3, then the interface address of the PA-A1 ATM is 3/1/0 (interface processor slot 3, port adapter slot 1, and interface 0). If the port adapter was in port adapter slot 0 on the VIP2 or VIP4, this same interface address would be 3/0/0.

Note If you remove the VIP2 or the VIP4 with the PA-A1 ATM from interface processor slot 3 and install it in interface processor slot 2, the interface address becomes 2/1/0.

Preparing for Installation

This chapter describes the general equipment, safety, and site preparation requirements for installing the PA-A1 ATM port adapter. This chapter contains the following sections:

- Required Tools and Equipment, page 2-1
- Software and Hardware Requirements, page 2-1
- Checking Hardware and Software Compatibility, page 2-3
- FCC Class A Compliance, page 2-7

Required Tools and Equipment

You need the following tools and parts to install a port adapter. If you need additional equipment, contact your service representative for ordering information.

- Catalyst RSM/VIP2 (for installation in Catalyst 5000 family switches). For information about the specific VIP2 models that support the PA-A1 ATM, see the "Software and Hardware Requirements" section on page 2-1.
- PA-A1 ATM(=) port adapter
- VIP2 or VIP4 (for installation in Cisco 7000 series or Cisco 7500 series chassis only). For information about the specific VIP2 or VIP4 models that support the PA-A1 ATM, see the "Software and Hardware Requirements" section on page 2-1
- ATM interface cable to connect the PA-A1 ATM with the ATM network.
- Number 1 Phillips and a 3/16-inch flat-blade screwdriver (for VIP2 or VIP4 installation only)
- Number 2 Phillips screwdriver
- Your own electrostatic discharge (ESD)-prevention equipment or the disposable grounding wrist strap included with all upgrade kits, field-replaceable units (FRUs), and spares
- Antistatic mat
- Antistatic container

Software and Hardware Requirements

Table 2-1 lists the recommended minimum Cisco IOS software release required to use the PA-A1 ATM in supported router or switch platforms.

Table 2-1 PA-A1 ATM Software Requirements

Platform	Recommended Minimum Cisco IOS Release
Catalyst 5000 family switches with RSM[1 2]	
• VIP2-15(=) or VIP2-40(=)	Cisco IOS Release 11.1(9)CA1 or a later release of Cisco IOS Release 11.1 CA Cisco IOS Release 11.2(7)P or a later release of Cisco IOS Release 11.2 P
Cisco 7100 series	
• Cisco 7120 series and Cisco 7140 series	Cisco IOS Release 12.0(4)XE or a later release of Cisco IOS Release 12.0 XE Cisco IOS Release 12.0(5)T or a later release of Cisco IOS Release 12.0 T
Cisco 7200 series[3]	
• Cisco 7204VXR and Cisco 7206VXR	Cisco IOS Release 12.0(2)XE2 or a later release of Cisco IOS Release 12.0 XE Cisco IOS Release 12.0(3)T or a later release of Cisco IOS Release 12.0 T Cisco IOS Release 12.2(4)B or a later release of Cisco IOS Release 12.2 B
• Cisco 7204 and Cisco 7206	Cisco IOS Release 11.1(10)CA or a later release of Cisco IOS Release 11.1 CA Cisco IOS Release 11.2(7)P or a later release of Cisco IOS Release 11.2 P Cisco IOS Release 12.2(4)B or a later release of Cisco IOS Release 12.2 B
• Cisco 7202	Cisco IOS Release 11.1(19)CC1 or a later release of Cisco IOS Release 11.1 CC Cisco IOS Release 11.3(4)AA or a later release of Cisco IOS Release 11.3 AA Cisco IOS Release 12.2(4)B or a later release of Cisco IOS Release 12.2 B
• Cisco 7206 router shelf	Cisco IOS Release 11.3(2)AA or a later release of Cisco IOS Release 11.3 AA Cisco IOS Release 12.2(4)B or a later release of Cisco IOS Release 12.2 B
Cisco uBR7200 series	
• Cisco uBR7246 and Cisco uBR7223	Cisco IOS Release 11.3(7)NA or a later release of Cisco IOS Release 11.3 NA Cisco IOS Release 12.0(3)T or a later release of Cisco IOS Release 12.0 T
VIP2 or VIP4 in the Cisco 7000 series and Cisco 7500 series[4 5]	
• With VIP2-15(=) or VIP2-40(=)	Cisco IOS Release 11.1(9)CA1 or a later release of Cisco IOS Release 11.1 CA Cisco IOS Release 11.2(7)P or a later release of Cisco IOS Release 11.2 P
• With VIP2-50(=)	Cisco IOS Release 11.1(14)CA or a later release of Cisco IOS Release 11.1 CA
• With VIP4-50(=)	Cisco IOS Release 12.0(10)S or a later release of Cisco IOS Release 12.0 S
• With VIP4-80(=)	Cisco IOS Release 12.0(10)S or a later release of Cisco IOS Release 12.0 S

1. The VIP2-15 has 1 MB of SRAM and 16 MB of DRAM. The VIP2-40 has 2 MB of SRAM and 32 MB of DRAM.
2. On the Catalyst RSM/VIP2, only a single PA-A1 ATM can be used. (A blank port adapter is installed in the adjacent port adapter slot.) No other port adapter can be installed in the adjacent port adapter slot alongside the PA-A1-ATM.
3. Cisco IOS Release 11.2(7a)P or a later release of 11.2 P supports half-duplex and binary synchronous communications (bisync) operation on the PA-A1 ATM port adapter in Cisco 7200 series routers.
4. On the VIP2, only a single PA-A1 ATM can be used. (A blank port adapter is installed in the adjacent port adapter slot.) No Other port adapter can be installed in the adjacent port adapter slot alongside the PA-A1 ATM.
5. The specific VIP2 models recommended for the PA-A1 ATM in all Cisco 7500 series routers, and in Cisco 7000 series routers using the RSP7000 and RSP7000CI, are VIP2-40(=), which has 2 MB of SRAM and 32 MB of DRAM, and VIP2-50(=), which has 4 to 8 MB of SRAM and 32 to 128 MB of SDRAM; however, the PA-A1 ATM is also supported by the VIP2-15(=) and VIP2-20(=) models, but we do not recommend its use with these VIP2 models.

Caution The VIP2 and VIP4 require that the Cisco 7000 series router has the RSP7000 and RSP7000CI installed. The VIP2 and VIP4 will *not* operate properly with the Route Processor (RP), Switch Processor (SP), or Silicon Switch Processor (SSP) installed in the Cisco 7000 series router.

In the Cisco 7200 series routers, there are specific configuration guidelines that must be observed for high-bandwidth port adapters such as the PA-A1 ATM port adapter. For port adapter hardware and memory configuration guidelines for the Cisco 7200 series routers (including the Cisco 7206 and Cisco 7206VXR as router shelves in a Cisco AS5800 Universal Access Server), refer to the document *Cisco 7200 Series Port Adapter Hardware Configuration Guidelines* that shipped with your Cisco 7200 series router.

Checking Hardware and Software Compatibility

To check the minimum software requirements of Cisco IOS software with the hardware installed on your router, Cisco maintains the Software Advisor tool on Cisco.com. This tool does not verify whether modules within a system are compatible, but it does provide the minimum IOS requirements for individual hardware modules or components.

Note Access to this tool is limited to users with Cisco.com login accounts.

To access Software Advisor, click **Login** at Cisco.com and go to **Technical Support Help—Cisco TAC**: **Tool Index**: **Software Advisor**. You can also access the tool by pointing your browser directly to http://www.cisco.com/cgi-bin/support/CompNav/Index.pl.

Choose a product family or enter a specific product number to search for the minimum supported software release needed for your hardware.

Safety Guidelines

This section provides safety guidelines that you should follow when working with any equipment that connects to electrical power or telephone wiring.

Safety Warnings

Safety warnings appear throughout this publication in procedures that, if performed incorrectly, might harm you. A warning symbol precedes each warning statement.

Warning This warning symbol means danger. You are in a situation that could cause bodily injury. Before you work on any equipment, be aware of the hazards involved with electrical circuitry and be familiar with standard practices for preventing accidents. To see translations of the warnings that appear in this publication, refer to the Regulatory Compliance and Safety Information document that accompanied this device.

Waarschuwing Dit waarschuwingssymbool betekent gevaar. U verkeert in een situatie die lichamelijk letsel kan veroorzaken. Voordat u aan enige apparatuur gaat werken, dient u zich bewust te zijn van de bij elektrische schakelingen betrokken risico's en dient u op de hoogte te zijn van standaard maatregelen om ongelukken te voorkomen. Voor vertalingen van de waarschuwingen die in deze publicatie verschijnen, kunt u het document *Regulatory Compliance and Safety Information* (Informatie over naleving van veiligheids- en andere voorschriften) raadplegen dat bij dit toestel is ingesloten.

Varoitus Tämä varoitusmerkki merkitsee vaaraa. Olet tilanteessa, joka voi johtaa ruumiinvammaan. Ennen kuin työskentelet minkään laitteiston parissa, ota selvää sähkökytkentöihin liittyvistä vaaroista ja tavanomaisista onnettomuuksien ehkäisykeinoista. Tässä julkaisussa esiintyvien varoitusten käännökset löydät laitteen mukana olevasta *Regulatory Compliance and Safety Information* -kirjasesta (määräysten noudattaminen ja tietoa turvallisuudesta).

Attention Ce symbole d'avertissement indique un danger. Vous vous trouvez dans une situation pouvant causer des blessures ou des dommages corporels. Avant de travailler sur un équipement, soyez conscient des dangers posés par les circuits électriques et familiarisez-vous avec les procédures couramment utilisées pour éviter les accidents. Pour prendre connaissance des traductions d'avertissements figurant dans cette publication, consultez le document *Regulatory Compliance and Safety Information* (Conformité aux règlements et consignes de sécurité) qui accompagne cet appareil.

Warnung Dieses Warnsymbol bedeutet Gefahr. Sie befinden sich in einer Situation, die zu einer Körperverletzung führen könnte. Bevor Sie mit der Arbeit an irgendeinem Gerät beginnen, seien Sie sich der mit elektrischen Stromkreisen verbundenen Gefahren und der Standardpraktiken zur Vermeidung von Unfällen bewußt. Übersetzungen der in dieser Veröffentlichung enthaltenen Warnhinweise finden Sie im Dokument *Regulatory Compliance and Safety Information* (Informationen zu behördlichen Vorschriften und Sicherheit), das zusammen mit diesem Gerät geliefert wurde.

Avvertenza Questo simbolo di avvertenza indica un pericolo. La situazione potrebbe causare infortuni alle persone. Prima di lavorare su qualsiasi apparecchiatura, occorre conoscere i pericoli relativi ai circuiti elettrici ed essere al corrente delle pratiche standard per la prevenzione di incidenti. La traduzione delle avvertenze riportate in questa pubblicazione si trova nel documento *Regulatory Compliance and Safety Information* (Conformità alle norme e informazioni sulla sicurezza) che accompagna questo dispositivo.

Advarsel Dette varselsymbolet betyr fare. Du befinner deg i en situasjon som kan føre til personskade. Før du utfører arbeid på utstyr, må du vare oppmerksom på de faremomentene som elektriske kretser innebærer, samt gjøre deg kjent med vanlig praksis når det gjelder å unngå ulykker. Hvis du vil se oversettelser av de advarslene som finnes i denne publikasjonen, kan du se i dokumentet *Regulatory Compliance and Safety Information* (Overholdelse av forskrifter og sikkerhetsinformasjon) som ble levert med denne enheten.

Aviso **Este símbolo de aviso indica perigo. Encontra-se numa situação que lhe poderá causar danos físicos. Antes de começar a trabalhar com qualquer equipamento, familiarize-se com os perigos relacionados com circuitos eléctricos, e com quaisquer práticas comuns que possam prevenir possíveis acidentes. Para ver as traduções dos avisos que constam desta publicação, consulte o documento *Regulatory Compliance and Safety Information* (Informação de Segurança e Disposições Reguladoras) que acompanha este dispositivo.**

¡Advertencia! **Este símbolo de aviso significa peligro. Existe riesgo para su integridad física. Antes de manipular cualquier equipo, considerar los riesgos que entraña la corriente eléctrica y familiarizarse con los procedimientos estándar de prevención de accidentes. Para ver una traducción de las advertencias que aparecen en esta publicación, consultar el documento titulado *Regulatory Compliance and Safety Information* (Información sobre seguridad y conformidad con las disposiciones reglamentarias) que se acompaña con este dispositivo.**

Varning! **Denna varningssymbol signalerar fara. Du befinner dig i en situation som kan leda till personskada. Innan du utför arbete på någon utrustning måste du vara medveten om farorna med elkretsar och känna till vanligt förfarande för att förebygga skador. Se förklaringar av de varningar som förkommer i denna publikation i dokumentet *Regulatory Compliance and Safety Information* (Efterrättelse av föreskrifter och säkerhetsinformation), vilket medföljer denna anordning.**

Single-Mode Transmitter Warning

The single-mode transmitter in the PA-A1 ATM uses a small laser to transmit the light signal to the network ring. Keep the transmit port covered whenever a cable is not connected to it. Although multimode transceivers typically use LEDs for transmission, it is good practice to keep open ports covered and to avoid staring into open ports or apertures.

Following is an example of the warning label that appears on the product:

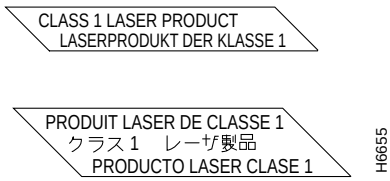

Warning **Invisible laser radiation may be emitted from the aperture ports of the single-mode ATM port adapter when no fiber cable is connected. *Avoid exposure and do not stare into open apertures.***

Warning **Class 1 laser product.**

Electrical Equipment Guidelines

Follow these basic guidelines when working with any electrical equipment:

- Before beginning any procedures requiring access to the chassis interior, locate the emergency power-off switch for the room in which you are working.

- Disconnect all power and external cables before moving a chassis; do not work alone when potentially hazardous conditions exist.
- Never assume that power has been disconnected from a circuit; always check.
- Do not perform any action that creates a potential hazard to people or makes the equipment unsafe; carefully examine your work area for possible hazards such as moist floors, ungrounded power extension cables, and missing safety grounds.

Telephone Wiring Guidelines

Use the following guidelines when working with any equipment that is connected to telephone wiring or to other network cabling:

- Never install telephone wiring during a lightning storm.
- Never install telephone jacks in wet locations unless the jack is specifically designed for wet locations.
- Never touch uninsulated telephone wires or terminals unless the telephone line has been disconnected at the network interface.
- Use caution when installing or modifying telephone lines.

Preventing Electrostatic Discharge Damage

Electrostatic discharge (ESD) damage, which can occur when electronic cards or components are improperly handled, results in complete or intermittent failures. Port adapters and processor modules comprise printed circuit boards that are fixed in metal carriers. Electromagnetic interference (EMI) shielding and connectors are integral components of the carrier. Although the metal carrier helps to protect the board from ESD, use a preventative antistatic strap during handling.

Following are guidelines for preventing ESD damage:

- Always use an ESD wrist or ankle strap and ensure that it makes good skin contact.
- Connect the equipment end of the strap to an unfinished chassis surface.
- When installing a component, use any available ejector levers or captive installation screws to properly seat the bus connectors in the backplane or midplane. These devices prevent accidental removal, provide proper grounding for the system, and help to ensure that bus connectors are properly seated.
- When removing a component, use any available ejector levers or captive installation screws to release the bus connectors from the backplane or midplane.
- Handle carriers by available handles or edges only; avoid touching the printed circuit boards or connectors.
- Place a removed component board-side-up on an antistatic surface or in a static shielding container. If you plan to return the component to the factory, immediately place it in a static shielding container.
- Avoid contact between the printed circuit boards and clothing. The antistatic strap only protects components from ESD voltages on the body; ESD voltages on clothing can still cause damage.
- Never attempt to remove the printed circuit board from the metal carrier.

Caution For safety, periodically check the resistance value of the antistatic strap. The measurement should be between 1 and 10 megohms (Mohm).

FCC Class A Compliance

This equipment has been tested and found to comply with the limits for a Class A digital device pursuant to part 15 of the FCC rules. These limits are designed to provide reasonable protection against harmful interference when the equipment is operated in a commercial environment. This equipment generates, uses, and can radiate radio-frequency energy and, if not installed and used in accordance with the instruction manual, may cause harmful interference to radio communications. Operation of this equipment in a residential area is likely to cause harmful interference, in which case users will be required to correct the interference at their own expense.

You can determine whether your equipment is causing interference by turning it off. If the interference stops, it was probably caused by the Cisco equipment or one of its peripheral devices. If the equipment causes interference to radio or television reception, try to correct the interference by using one or more of the following measures:

- Turn the television or radio antenna until the interference stops.
- Move the equipment to one side or the other of the television or radio.
- Move the equipment farther away from the television or radio.
- Plug the equipment into an outlet that is on a different circuit from the television or radio. (That is, make certain the equipment and the television or radio are on circuits controlled by different circuit breakers or fuses.)

Note The PA-A1 ATM port adapter has been designed to meet the FCC Class A requirements. Modifications to this product not authorized by Cisco Systems, Inc. could void the various approvals and negate your authority to operate the product.

Removing and Installing Port Adapters

This chapter describes how to remove the PA-A1 ATM port adapter from supported platforms and also how to install a new or replacement port adapter. This chapter contains the following sections:

- Handling Port Adapters, page 3-1
- Online Insertion and Removal, page 3-2
- Warnings and Cautions, page 3-3
- Port Adapter Removal and Installation, page 3-3

Each port adapter circuit board is mounted to a metal carrier and is sensitive to electrostatic discharge (ESD) damage. The Cisco 7100 series routers, Cisco 7200 series routers, and Cisco uBR7200 series routers support online insertion and removal (OIR) of port adapters, however the Catalyst RSM/VIP2 and the VIP2, VIP4 do not. Removal of the VIP2, VIP4, or Catalyst RSM/VIP2 is required before installing the new port adapter. This section discusses the removal and installation of port adapters from the Catalyst RSM/VIP2, Cisco 7100 series routers, Cisco 7200 series routers, uBR7200 series routers, VIP2 and VIP4.

Note When a port adapter slot is not in use, a blank port adapter must fill the empty slot to allow the router or switch to conform to electromagnetic interference (EMI) emissions requirements and to allow proper airflow across the port adapters. If you plan to install a new port adapter in a slot that is not in use, you must first remove the blank port adapter.

Caution When powering off the router, wait a minimum of 30 seconds before powering it on again.

Handling Port Adapters

Caution Always handle the port adapter by the carrier edges and handle; never touch the port adapter components or connector pins. (See Figure 3-1.)

Figure 3-1 Handling a Port Adapter

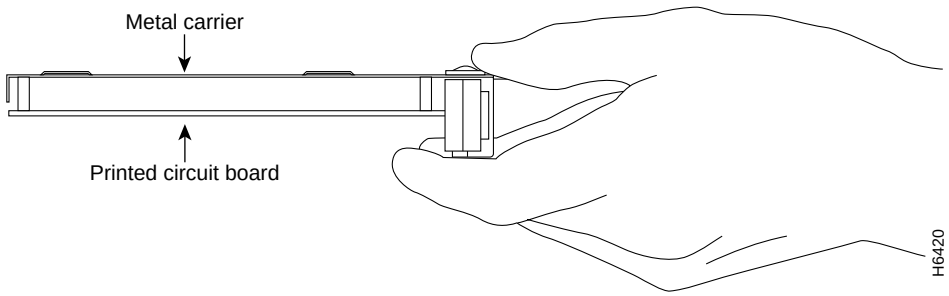

Online Insertion and Removal

Several platforms support online insertion and removal (OIR) of port adapters; therefore, you do not have to power down routers when removing and replacing a PA-A1 ATM on Cisco 7100 series routers, Cisco 7200 series routers, or Cisco uBR7200 series routers.

Although the VIP2, VIP4, and the Catalyst RSM/VIP2 support online insertion and removal, individual port adapters do not. To replace port adapters, you must first remove the VIP2, VIP4, or Catalyst RSM/VIP2 from the chassis and then install or replace port adapters as required. If a blank port adapter is installed on the VIP2, VIP4, or Catalyst RSM/VIP2 on which you want to install a new port adapter, you must first remove the VIP2, VIP4, or Catalyst RSM/VIP2 from the chassis and then remove the blank port adapter.

Caution To prevent system problems, do not remove port adapters from the VIP2, VIP4, or Catalyst RSM/VIP2 motherboard or attempt to install other port adapters on the motherboard when the system is operating. To install or replace port adapters, first remove the VIP2, VIP4, or Catalyst RSM/VIP2 from its interface processor slot.

It is wise to gracefully shut down the system before removing a port adapter that has active traffic moving through it. Removing a port adapter while traffic is flowing through the ports can cause system disruption. Once the port adapter is inserted, the ports can be brought back up.

Note As you disengage the port adapter from the router or switch, online insertion and removal (OIR) administratively shuts down all active interfaces in the port adapter.

OIR allows you to install and replace port adapters and service adapters while the router is operating; you do not need to notify the software or shut down the system power, although you should not run traffic through the port adapter you are removing while it is being removed. OIR is a method that is seamless to end users on the network, maintains all routing information, and preserves sessions.

The following is a functional description of OIR for background information only; for specific procedures for installing and replacing a PA-A1 in a supported platform, refer to the “Port Adapter Removal and Installation” section on page 3-3.

Each PA-A1 has a bus connector that connects it to the router. The connector has a set of tiered pins in three lengths that send specific signals to the system as they make contact with the port adapter. The system assesses the signals it receives and the order in which it receives them to determine if a port adapter is being removed from or introduced to the system. From these signals, the system determines whether to reinitialize a new interface or to shut down a disconnected interface.

Specifically, when you insert a port adapter, the longest pins make contact with the port adapter first, and the shortest pins make contact last. The system recognizes the signals and the sequence in which it receives them.

When you remove or insert a port adapter, the pins send signals to notify the system of changes. The router then perfoms the following procedure:

1. Rapidly scans the system for configuration changes.
2. Initializes newly inserted port adapters or administratively shuts down any vacant interfaces.
3. Brings all previously configured interfaces on the port adapter back to their previously installed state. Any newly inserted interface is put in the administratively shutdown state, as if it was present (but not configured) at boot time. If a similar port adapter type is reinserted into a slot, its ports are configured and brought online up to the port count of the originally installed port adapter of that type.

Note Before you begin installation, read Chapter 2, “Preparing for Installation” for a list of parts and tools required for installation.

Warnings and Cautions

Observe the following warnings and cautions when installing or removing port adapters.

Caution Do not slide a port adapter all the way into the slot until you have connected all required cables. Trying to do so disrupts normal operation of the router or switch.

Note If a port adapter lever or other retaining mechanism does not move to the locked position, the port adapter is not completely seated in the midplane. Carefully pull the port adapter halfway out of the slot, reinsert it, and move the port adapter lever or other mechanism to the locked position.

Caution To prevent jamming the carrier between the upper and the lower edges of the port adapter slot, and to ensure that the edge connector at the rear of the port adapter mates with the connection at the rear of the port adapter slot, make certain that the carrier is positioned correctly, as shown in the cutaway in the following illustrations.

Warning **When performing the following procedures, wear a grounding wrist strap to avoid ESD damage to the port adapter circuit card. Some platforms have an ESD connector for attaching the wrist strap. Do not directly touch the midplane or backplane with your hand or any metal tool, or you could shock yourself.**

Port Adapter Removal and Installation

In this section, the illustrations that follow give step-by-step instructions on how to remove and install port adapters. This section contains the following illustrations:

- Catalyst RSM/VIP2—Removing and Installing a Port Adapter, page 3-5
- Cisco 7100 Series—Removing and Installing a Port Adapter, page 3-6
- Cisco 7200 Series—Removing and Installing a Port Adapter, page 3-7
- Cisco uBR7200 Series—Removing a Port Adapter, page 3-8
- Cisco uBR7200 Series—Installing a Port Adapter, page 3-9
- VIP2 and VIP4 —Removing and Installing a Port Adapter, page 3-10

Catalyst RSM/VIP2—Removing and Installing a Port Adapter

Note: You must first remove the Catalyst RSM/VIP2 from the chassis before removing a port adapter from the Catalyst RSM/VIP2.

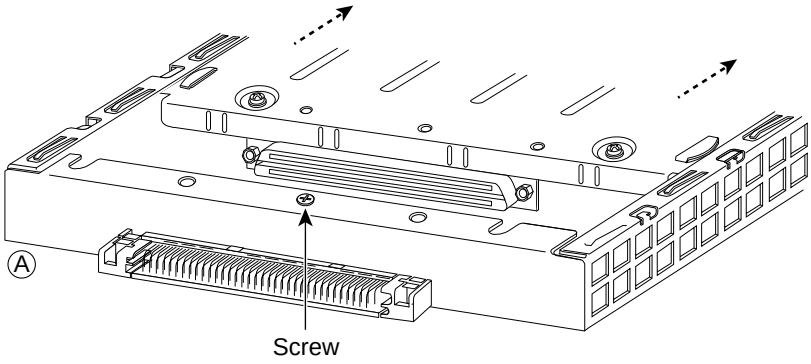

Step 1

To remove the port adapter, remove the screw that secures the port adapter (or blank port adapter). (See A.)

Step 2

With the screw removed, grasp the handle on the front of the port adapter (or blank port adapter) and carefully pull it out of its slot, away from the edge connector at the rear of the slot. (See A.)

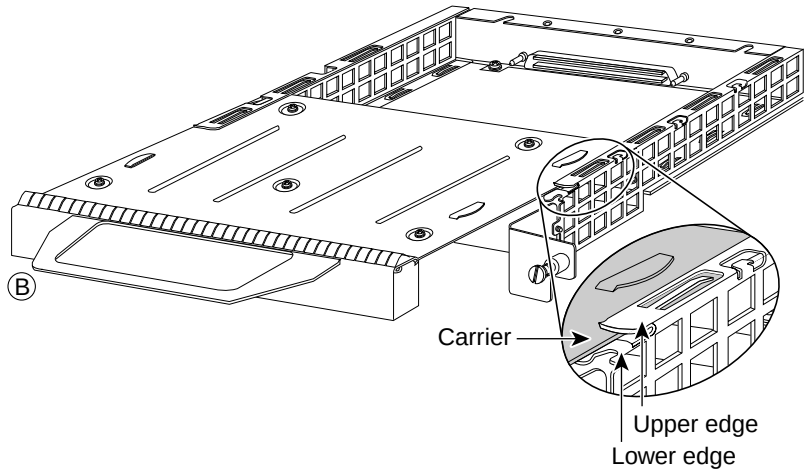

Step 3

To install the port adapter, carefully align the port adapter carrier between the upper and the lower edges of the port adapter slot. (See B.)

Step 4

Install the screw in the rear of the port adapter slot. Do not overtighten the screw. (See A.)

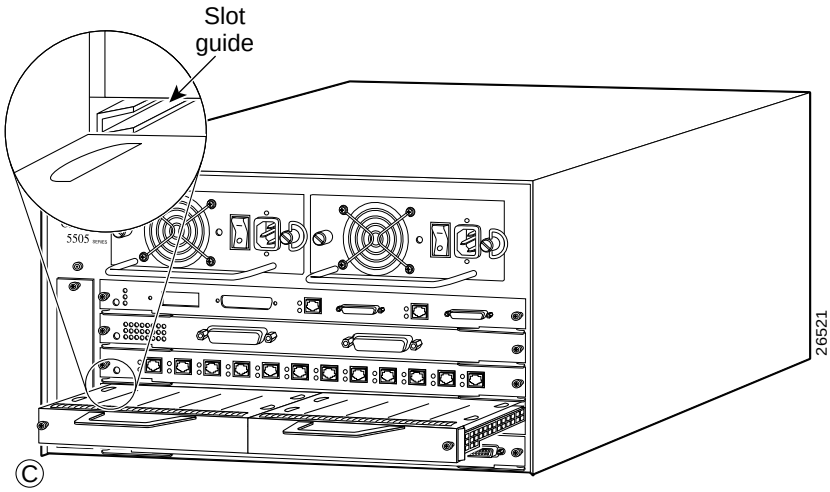

Step 5

Carefully slide the new port adapter into the port adapter slot until the connector on the port adapter is completely seated in the connector at the rear of the port adapter slot. (See B.)

Step 6

Reinstall the Catalyst RSM/VIP2 motherboard in the chassis and tighten the captive installation screw on each side of the Catalyst RSM/VIP2 faceplate. (See C.)

Cisco 7100 Series—Removing and Installing a Port Adapter

Step 1

To remove the port adapter, use a number 2 Phillips screwdriver to loosen the screws on the locking tab. Then slide the tab down to the unlocked position.

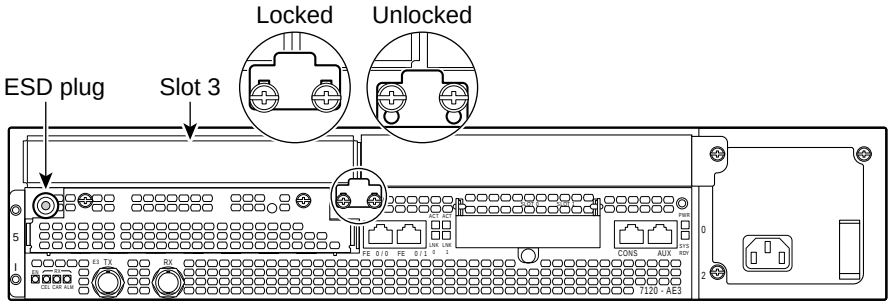

Step 2

Grasp the handle of the port adapter and pull the port adapter from the router, about halfway out of its slot. If you are removing a blank port adapter, pull the blank port adapter completely out of the chassis slot.

Step 3

With the port adapter halfway out of the slot, disconnect all cables from the port adapter.

Step 4

After disconnecting the cables, pull the port adapter from its chassis slot.

Step 5

To insert the port adapter, carefully align the port adapter carrier between the upper and the lower edges of the port adapter slot.

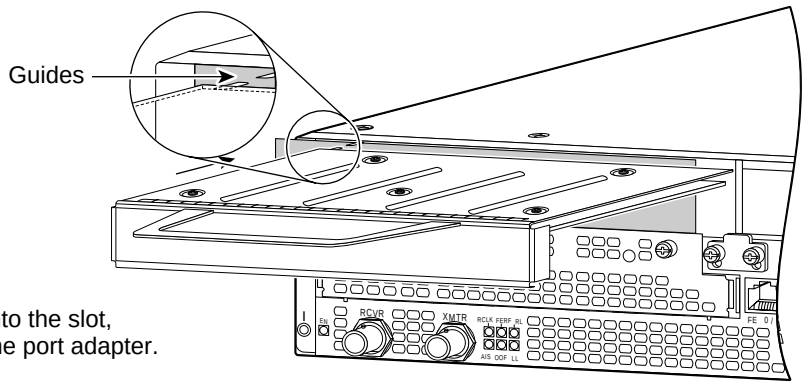

Step 6

With the port adapter halfway into the slot, connect all required cables to the port adapter.

Step 7

After connecting all required cables, carefully slide the port adapter all the way into the slot until the port adapter is seated in the router midplane.

Step 8

After the port adapter is properly seated, lock the port adapter retaining mechanism.

26522

Cisco 7200 Series—Removing and Installing a Port Adapter

Step 1

To remove the port adapter, place the port adapter lever in the unlocked position. (See A.) The port adapter lever remains in the unlocked position.

Step 2

Grasp the handle of the port adapter and pull the port adapter from the router, about halfway out of its slot. If you are removing a blank port adapter, pull the blank port adapter completely out of the chassis slot.

Step 3

With the port adapter halfway out of the slot, disconnect all cables from the port adapter. After disconnecting the cables, pull the port adapter from its chassis slot.

Step 4

To insert the port adapter, carefully align the port adapter carrier between the upper and the lower edges of the port adapter slot. (See B.)

Step 5

Carefully slide the new port adapter halfway into the port adapter slot. (See B.)

Step 6

With the port adapter halfway into the slot, connect all required cables to the port adapter. After connecting all required cables, carefully slide the port adapter all the way into the slot until the port adapter is seated in the router midplane.

Step 7

After the port adapter is properly seated, lock the port adapter lever. (See A.)

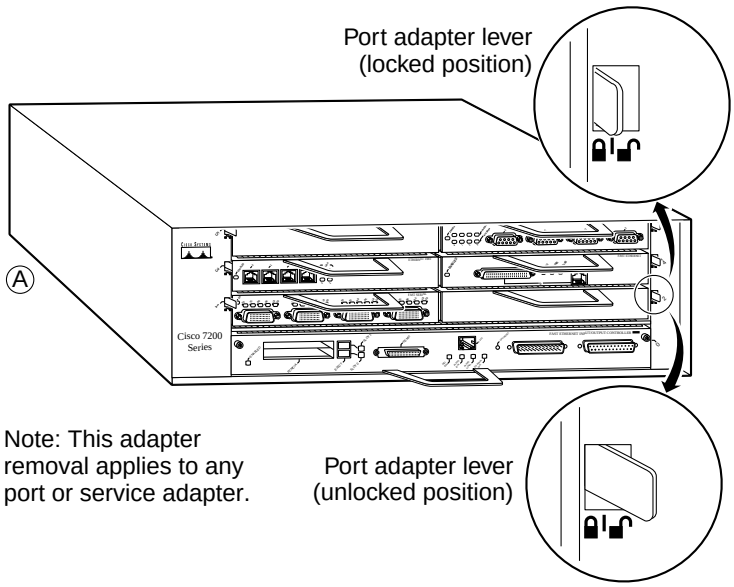

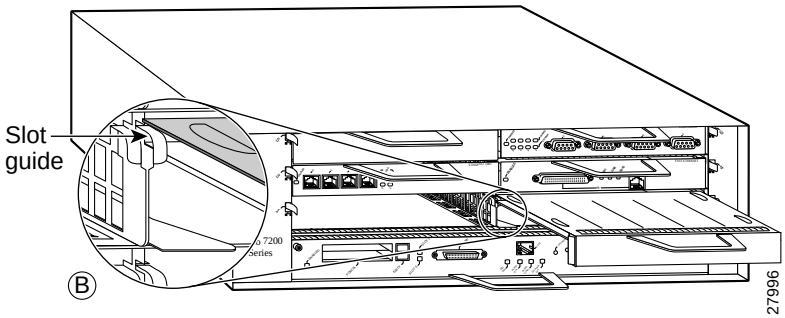

Cisco uBR7200 Series—Removing a Port Adapter

Step 1

To remove the port adapter, unlock the port adapter retaining mechanism. The port adapter lever remains in the unlocked position.

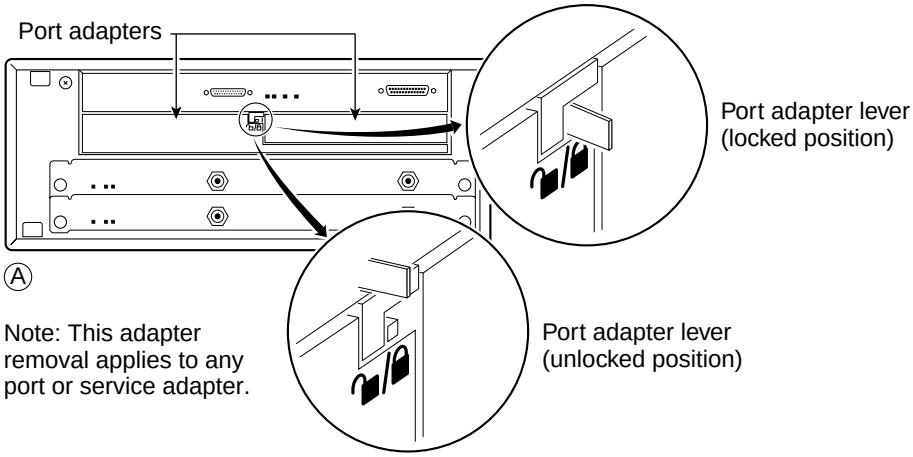

Place the port adapter lever (Cisco uBR7223, see A), or the port adapter retention clip (Cisco uBR7246 and Cisco uBR7246 VXR, see B) in the unlocked position. Either mechanism remains in the unlocked position.

Note: This adapter removal applies to any port or service adapter.

Step 2

Grasp the handle of the port adapter and pull the port adapter from the router, about halfway out of its slot.
If you are removing a blank port adapter, pull the blank port adapter completely out of the chassis slot.

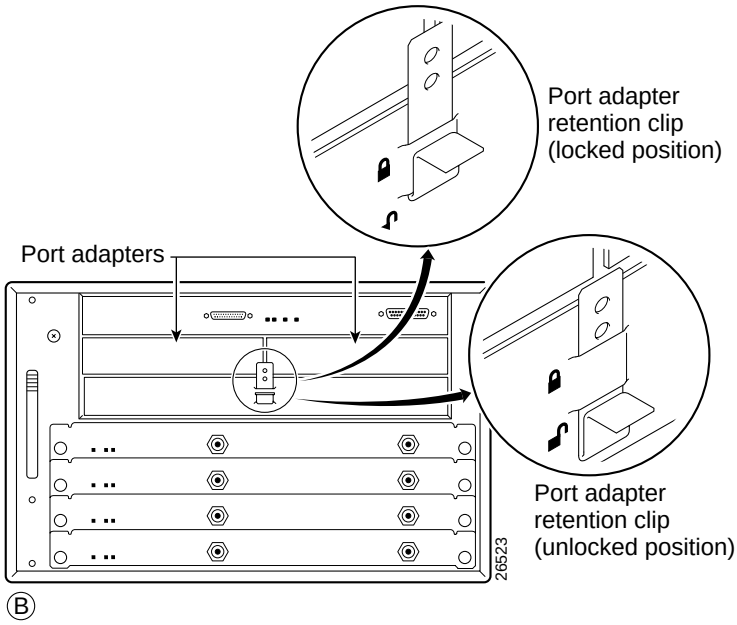

Step 3

With the port adapter halfway out of the slot, disconnect all cables from the port adapter. After disconnecting the cables, pull the port adapter from its chassis slot.

Cisco uBR7200 Series—Installing a Port Adapter

Step 1

To insert the port adapter, carefully align the port adapter carrier between the upper and the lower edges of the port adapter slot.

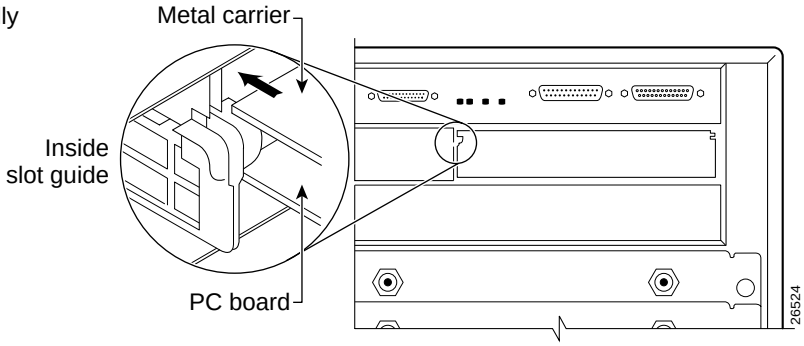

Step 2

Carefully slide the new port adapter halfway into the port adapter slot.

Step 3

With the port adapter halfway into the slot, connect all required cables to the port adapter. After connecting all required cables, carefully slide the port adapter all the way into the slot until the port adapter is seated in the router midplane.

Step 4

After the port adapter is properly seated, lock the port adapter lever or retention clip, depending on your system. (See illustration on preceding page.)

VIP2 and VIP4 —Removing and Installing a Port Adapter

Note: You must first remove the VIP from the chassis before removing a port adapter from the VIP.

Step 1

To remove the port adapter, remove the screw that secures the port adapter (or blank port adapter). (See A.)

Step 2

With the screw removed, grasp the handle on the front of the port adapter (or blank port adapter) and carefully pull it out of its slot, away from the edge connector at the rear of the slot. (See A.)

Step 3

To insert the port adapter, carefully align the port adapter carrier between the upper and the lower edges of the port adapter slot. (See B.)

Step 4

Carefully slide the new port adapter into the port adapter slot until the connector on the port adapter is completely seated in the connector at the rear of the port adapter slot. (See B.)

Step 5

Install the screw in the rear of the port adapter slot on the VIP. Do not overtighten the screw. (See A.)

Step 6

Carefully slide the VIP motherboard into the interface processor slot until the connectors at the rear of the VIP are completely seated in the connectors at the rear of the interface processor slot. Use the ejector levers to seat the VIP in the interface processor slot. Tighten the captive installation screws on the VIP. (See C.)

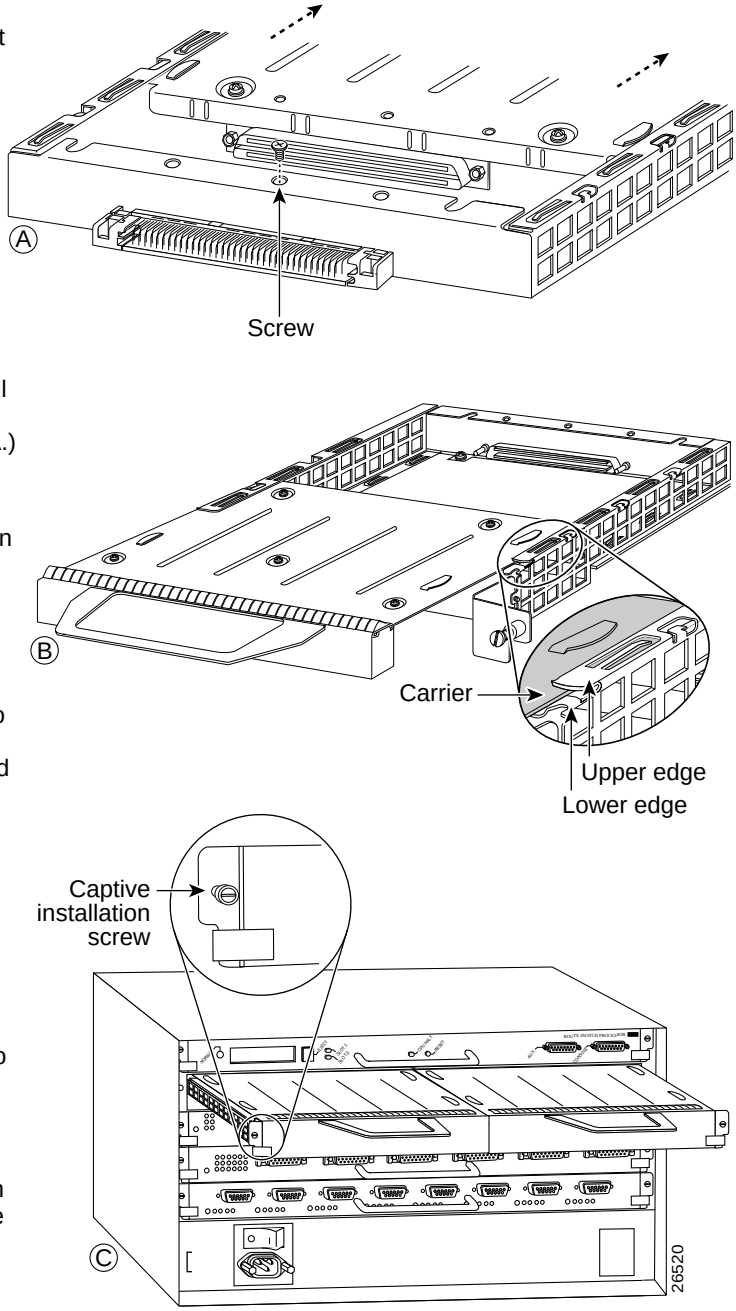

Attaching the PA-A1 ATM Interface Cables

To continue your PA-A1 ATM port adapter installation, you must attach the port adapter cables. The instructions that follow apply to all supported platforms. This chapter contains the following sections:

- Connecting an Interface Cable, page 4-1
- SONET Distance Limitations, page 4-2
- Determining the Power Budget, page 4-3
- Approximating the PA-A1 ATM Power Margin, page 4-3

Connecting an Interface Cable

PA-A1 ATM interfaces are full-duplex. You must use the appropriate ATM interface cable to connect the PA-A1 ATM with an external ATM network. The PA-A1 ATM cables, shown in Figure 4-1 and Figure 4-2, provide an interface to ATM switching fabrics for transmitting and receiving data at rates of up to 155 Mbps bidirectionally. The PA-A1 ATM connects to the SONET/SDH 155 Mbps multimode or single-mode optical fiber—STS-3 or STM-1 physical layer.

An OC-3 ATM interface cable, which is used to connect your router to an external DSU (an ATM network), is available for use with the PA-A1 ATM.

Note The ATM port on the PA-A1 ATM is considered to be a DTE device.

For SONET/SDH multimode and SONET/STC-3 single-mode connections, use one duplex SC connector (see Figure 4-1) or two single SC connectors (see Figure 4-2). The SONET simplex and duplex SC connectors are shipped with removable dust covers on each connector.

Figure 4-1 Duplex SC Connector

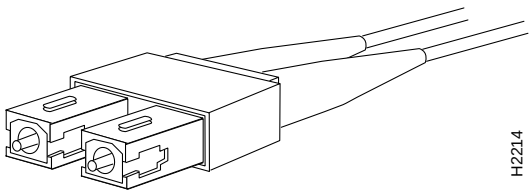

Figure 4-2 Simplex SC Connector

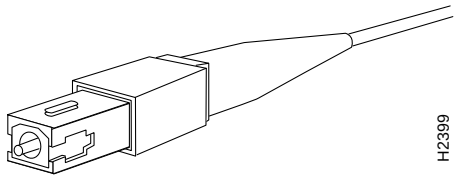

Single-mode and multimode cables should perform to the following specifications:

Standard	Maximum Path Length	Cabling
ISO/IEC 9314-3	2 km (all cables in a connection, end-to-end)	62.5-micron core with an optical loss of 0 to 9 dB, or 50-micron core with an optical loss of 7 dB

Note A single fiber link should not mix 62.5- and 50-micron core cable.

SONET Distance Limitations

The SONET specification for fiber-optic transmission defines two types of fiber: single-mode and multimode. Modes can be thought of as bundles of light rays entering the fiber at a particular angle. Single-mode fiber allows only one mode of light to propagate through the fiber, while multimode fiber allows multiple modes of light to propagate through the fiber. Multiple modes of light propagating through the fiber travel different distances depending on the entry angles. The differing travel speeds cause the modes to arrive at the destination at different times. Single-mode fiber is capable of higher bandwidth and greater cable run distances than multimode fiber.

The typical maximum distances for single-mode and multimode transmissions, as defined by SONET, are shown in Table 4-1. If the distance between two connected stations is greater than this maximum distance, significant signal loss can result, making transmission unreliable.

Table 4-1 Maximum Fiber-Optic Power Budget and Transmission Distances

Transceiver Type	Power Budget	Transmit Power	Receive Power	Maximum Distance Between Stations[1]
Single-mode[2]	13 dB[3]	–15 to –8 dBm[4] at 1261 to 1360 nm[5]	–28 to –8 dBm	Up to 9.3 miles (15 km)
Multimode	11 dB	–19 to –14 dBm at 1270 to 1380 nm	–30 to –14 dBm	Up to 1.2 miles (2 km)

1. Table 4-1 gives typical results. Use the power budget calculations described below to determine the actual distances.
2. Complies with Bellcore GR-253 Intermediate Reach Specification.
3. dB = decibels
4. dBm = decibels per milliwatt
5. nm = nanometers

Determining the Power Budget

To design an efficient optical data link, evaluate the power budget. The power budget is the amount of light available to overcome attenuation in the optical link and to exceed the minimum power that the receiver requires to operate within its specifications. Proper operation of an optical data link depends on modulated light reaching the receiver with enough power to be correctly demodulated.

Attenuation, caused by the passive media components (cables, cable splices, and connectors), is common to both multimode and single-mode transmission.

The following variables reduce the power of the signal (light) transmitted to the receiver in multimode transmission:

- Chromatic dispersion (spreading of the signal in time because of the different speeds of light wavelengths)
- Modal dispersion (spreading of the signal in time because of the different propagation modes in the fiber)

Attenuation is significantly lower for optical fiber than for other media. For multimode transmission, chromatic and modal dispersion reduce the available power of the system by the combined dispersion penalty (dB). The power lost over the data link is the sum of the component, dispersion, and modal losses.

Table 4-2 lists the factors of attenuation and dispersion for typical fiber-optic cable.

Table 4-2 Typical Fiber-Optic Link Attenuation and Dispersion Limits

Limits	Single-mode	Multimode
Attenuation	0.5 dB	1.0 dB/km
Dispersion	No limit	500 MHz/km[1]

1. The product of bandwidth and distance must be less than 500 MHz/km.

Approximating the PA-A1 ATM Power Margin

The LED used for a multimode transmission light source creates multiple propagation paths of light, each with a different path length and time requirement to cross the optical fiber, causing signal dispersion (smear). Higher order mode loss (HOL) results when light from the LED enters the fiber and radiates into the fiber cladding. A worst case estimate of power margin (PM) for multimode transmissions assumes minimum transmitter power (PT), maximum link loss (LL), and minimum receiver sensitivity (PR). The worst case analysis provides a margin of error; not all of the parts of an actual system will operate at the worst case levels.

The power budget (PB) is the maximum possible amount of power transmitted. The following equation lists the calculation of the power budget:

PB = PT – PR

PB = –20 decibels per meter (dBm) – (–30 dBm)

PB = 10 dB

The power margin calculation is derived from the power budget and subtracts the link loss:

PM = PB – LL

If the power margin is positive, the link usually will work.

Table 4-3 lists the factors that contribute to link loss and the estimate of the link loss value attributable to those factors.

Table 4-3 Link Loss Factors and Values

Link Loss Factor	Estimate of Link Loss Value
Higher order mode losses	0.5 dB
Clock recovery module	1 dB
Modal and chromatic dispersion	Dependent on fiber and wavelength used
Connector	0.5 dB
Splice	0.5 dB
Fiber attenuation	1 dB/km for multimode (0 dB/km for single-mode)

After calculating the power budget minus the data link loss, the result should be greater than zero. Circuits whose results are less than zero may have insufficient power to operate the receiver.

The SONET specification requires that the signal must meet the worst case parameters listed in Table 4-4.

Table 4-4 ATM Port Adapter SONET Signal Requirements

	Single-mode	Multimode
PT	–15 dBm	–20 dBm
PR	–31 dBm	–30 dBm
PB	13 dB	11 dB

Multimode Power Budget Example with Sufficient Power for Transmission

The following is an example of multimode power budget calculated based on the following variables:

- Length of multimode link = 3 kilometers (km)
- 4 connectors
- 3 splices
- Higher order loss (HOL)
- Clock recovery module (CRM)

Estimate the power budget as follows:

PB = 11 dB – 3 km (1.0 dB/km) – 4 (0.5 dB) – 3 (0.5 dB) – 0.5 dB (HOL) – 1 dB (CRM)

PB = 11 dB – 3 dB – 2 dB – 1.5 dB – 0.5 dB – 1 dB

PB = 3 dB

The positive value of 3 dB indicates that this link would have sufficient power for transmission.

Multimode Power Budget Example of Dispersion Limit

The following example has the same parameters as the previous example, but with a multimode link distance of 4 km:

PB = 11 dB – 4 km (1.0 dB/km) – 4 (0.5 dB) – 3 (0.5 dB) – 0.5 dB (HOL) – 1 dB (CRM)

PB = 11 dB – 4 dB – 2 dB – 1.5 dB – 0.5 dB – 1 dB

PB = 2 dB

The value of 2 dB indicates that this link would have sufficient power for transmission. But, because of the dispersion limit on the link (4 km x 155.52 MHz > 500 MHz/km), this link would not work with multimode fiber. In this case, single-mode fiber would be the better choice.

Single-Mode Transmission

The single-mode signal source is an injection laser diode. Single-mode transmission is useful for longer distances, because there is a single transmission path within the fiber and smear does not occur. In addition, chromatic dispersion is also reduced because laser light is essentially monochromatic.

The maximum overload specification on the single-mode receiver is –14 dBm. The single-mode receiver can be overloaded when using short lengths of fiber because the transmitter can transmit up to –8 dB, but no damage to the receiver will result.

Caution To prevent overloading the receiver that is connecting short fiber links, insert a 5 to 10 dB attenuator on the link between any single-mode SONET transmitter and the receiver.

SONET Single-Mode Power Budget Example

The following example of a single-mode power budget assumes two buildings, 8 kilometers apart, are connected through a patch panel in an intervening building with a total of 12 connectors:

- Length of single-mode link = 8 km
- 12 connectors

Estimate the power margin as follows:

PM = PB – LL

PM = 13 dB – 8 km (0.5 dB/km) – 12 (0.5 dB)

PM = 13 dB – 4 dB – 6 dB

PM = 3 dB

The value of 3 dB indicates that this link would have sufficient power for transmission and is not in excess of the maximum receiver input power.

Using Statistics to Estimate the Power Budget

Statistical models more accurately determine the power budget than the worst case method. Determining the link loss with statistical methods requires accurate knowledge of variations in the data-link components. Statistical power budget analysis is beyond the scope of this document. For further information, refer to UNI Forum specifications, ITU-T standards, and your equipment specifications.

Configuring the PA-A1 ATM

To continue your PA-A1 ATM port adapter installation, you must configure the ATM interfaces. The instructions that follow apply to all supported platforms. Minor differences among the platforms—with Cisco IOS software commands—are noted.

This chapter contains the following sections:

- Using the EXEC Command Interpreter, page 5-1
- Configuring the Interfaces, page 5-2
- Checking the Configuration, page 5-12
- ATM Configuration Examples, page 5-21

Using the EXEC Command Interpreter

You modify the configuration of your router through the software command interpreter called the EXEC (also called enable mode). You must enter the privileged level of the EXEC command interpreter with the **enable** command before you can use the **configure** command to configure a new interface or change the existing configuration of an interface. The system prompts you for a password if one has been set.

The system prompt for the privileged level ends with a pound sign (#) instead of an angle bracket (>). At the console terminal, use the following procedure to enter the privileged level:

Step 1 At the user-level EXEC prompt, enter the **enable** command. The EXEC prompts you for a privileged-level password as follows:

```
Router> enable

Password:
```

Step 2 Enter the password (the password is case sensitive). For security purposes, the password is not displayed.

When you enter the correct password, the system displays the privileged-level system prompt (#):

```
Router#
```

To configure the new interfaces, proceed to the “Configuring the Interfaces” section on page 5-2.

Configuring the Interfaces

After you verify that the new PA-A1 ATM is installed correctly (the enabled LED goes on), use the privileged-level **configure** command to configure the new interfaces. Have the following information available:

- Protocols you plan to route on each new interface
- IP addresses, if you plan to configure the interfaces for IP routing
- Bridging protocols you plan to use
- Whether the new interfaces will use LAN Emulation (LANE)

If you installed a new PA-A1 ATM or if you want to change the configuration of an existing interface, you must enter configuration mode to configure the new interfaces. If you replaced a PA-A1-ATM that was previously configured, the system will recognize the new interfaces and brings each of them up in their existing configuration.

For a summary of the configuration commands available and instructions for configuring interfaces on a PA-A1 ATM, refer to the appropriate configuration publications listed in the "Related Documentation" section on page viii.

You execute configuration commands from the privileged level of the EXEC command interpreter, which usually requires password access. Contact your system administrator, if necessary, to obtain password access. (See the "Using the EXEC Command Interpreter" section on page 5-1 for an explanation of the privileged level of the EXEC.)

This section contains the following subsections:

- Shutting Down an Interface, page 5-2
- Performing a Basic Configuration, page 5-6

Shutting Down an Interface

Before you remove an interface that you will not replace, replace an ATM interface cable, or replace port adapters, use the **shutdown** command to shut down (disable) the interfaces to prevent anomalies when you reinstall the new or reconfigured interface processor. When you shut down an interface, it is designated *administratively down* in the **show** command displays.

Follow these steps to shut down an interface:

Step 1 Enter the privileged level of the EXEC command interpreter (also called enable mode). (See the "Using the EXEC Command Interpreter" section on page 5-1 for instructions.)

Step 2 At the privileged-level prompt, enter configuration mode and specify that the console terminal will be the source of the configuration subcommands, as follows:

```
Router# configure terminal
Enter configuration commands, one per line. End with CNTL/Z.
Router(config)#
```

Step 3 Shut down interfaces by entering the **interface atm** subcommand (followed by the interface address of the interface), and then enter the **shutdown** command. Table 5-1 shows the command syntax.

When you have finished, press **Ctrl-Z**—hold down the **Control** key while you press **Z**—or enter **end** or **exit** to exit configuration mode and return to the EXEC command interpreter.

Note For the Cisco 7206 and Cisco 7206VXR router shelves, the interface specified in the above example would include a shelf number. For example, the command **interface atm 5/2/0** would specify the first ATM interface of the port adapter in slot 2 of Cisco 7206 or 7206VXR router shelf 5. See Table 5-1.

Table 5-1 Syntax of the shutdown Command

Platform	Command	Example

Catalyst RSM/VIP2 in Catalyst 5000 family switches	**interface**, followed by the *type* (**atm**) and *slot/port* (port-adapter-slot-number/ interface-port-number)	The example is for interface 0 on a port adapter in port adapter slot 1.
		`Router(config)# interface atm 1/0`
		`Router(config-if)# shutdown`
		`Ctrl-Z`
		`Router#`

Cisco 7120 series routers	**interface**, followed by the *type* (**atm**) and *slot/port* (port-adapter-slot-number/ interface-port-number)	The example is for interface 0 on a port adapter in port adapter slot 3.
		`Router(config)# interface atm 3/0`
		`Router(config-if)# shutdown`
		`Ctrl-Z`
		`Router#`

Cisco 7140 series routers	**interface**, followed by the *type* (**atm**) and *slot/port* (port-adapter-slot-number/ interface-port-number)	The example is for interface 0 on a port adapter in port adapter slot 4.
		`Router(config)# interface atm 4/0`
		`Router(config-if)# shutdown`
		`Ctrl-Z`
		`Router#`

Cisco 7200 series routers	**interface**, followed by the *type* (**atm**) *and slot/port* (port-adapter-slot-number/ interface-port-number)	The example is for interface 0 on a port adapter in port adapter slot 2.
		`Router(config)# interface atm 2/0`
		`Router(config-if) shutdown`
		`Ctrl-Z`
		`Router#`

Cisco uBR7223 router	**interface**, followed by the *type* (**atm**) *and slot/port* (port-adapter-slot-number/ interface-port-number)	The example is for interface 0 on a port adapter in port adapter slot 2.
		`Router(config)# interface atm 2/0`
		`Router(config-if) shutdown`
		`Ctrl-Z`
		`Router#`

Table 5-1 Syntax of the shutdown Command

Platform	Command	Example

Cisco uBR7246 router	**interface**, followed by the *type* (**atm**) *and slot/port* (port-adapter-slot-number/ interface-port-number)	The example is for interface 0 on a port adapter in port adapter slot 2.
		`Router(config)# interface atm 2/0`
		`Router(config-if) shutdown`
		`Ctrl-Z`
		`Router#`

VIP2 and VIP4 in Cisco 7000 series or Cisco 7500 series routers	**interface**, followed by the *type* (**atm**) and *slot/port-adapter/port* (interface-processor-slot-number/ port-adapter-slot-number/ interface-port-number)	The example is for interface 0 on a port adapter in port adapter slot 0 on a VIP2 or VIP4 installed in interface processor slot 1.
		`Router(config)# interface atm 1/0/0`
		`Router (config-if) shutdown`
		`Ctrl-Z`
		`Router#`

Note If you need to shut down additional interfaces, enter the **interface atm** command (followed by the interface address of the interface) for each of the interfaces on your port adapter. Use the **no shutdown** command to enable the interface.

Step 4 Write the new configuration to NVRAM as follows:

```
Router# copy running-config startup-config
[OK]
Router#
```

The system displays an OK message when the configuration has been stored in NVRAM.

Step 5 Verify that new interfaces are now in the correct state (shut down) using the **show interfaces** command (followed by the interface type and interface address of the interface) to display the specific interface. Table 5-2 provides examples.

Table 5-2 Examples of the show interfaces Command

Platform	Command	Example

Catalyst RSM/VIP2 in Catalyst 5000 family switches	**show interfaces atm**, followed by *slot/port* (port-adapter-slot-number/ interface-port-number)	The example is for interface 0 on a port adapter in port adapter slot 3.
		`Router(config)# show interfaces atm 3/0`
		`ATM3/0 is administratively down, line protocol is down`
		`[Additional display text omitted from this example]`

Cisco 7120 series routers	**show interfaces atm**, followed by *slot/port* (port-adapter-slot-number/ interface-port-number)	The example is for interface 0 on a port adapter in port adapter slot 3.
		`Router(config)# show interfaces atm 3/0`
		`ATM3/0 is administratively down, line protocol is down`
		`[Additional display text omitted from this example]`

Table 5-2 Examples of the show interfaces Command (continued)

Platform	Command	Example

Cisco 7140 series routers	**show interfaces atm**, followed by *slot/port* (port-adapter-slot-number/ interface-port-number)	The example is for interface 0 on a port adapter in port adapter slot 4.
		`Router(config)# show interfaces atm 4/0`
		`ATM4/0 is administratively down, line protocol is down`
		
		`[Additional display text omitted from this example]`

Cisco 7200 series routers	**show interfaces atm**, followed by *slot/port* (port-adapter-slot-number/ interface-port-number)	The example is for interface 0 on a port adapter in port adapter slot 2.
		`Router(config)# show interfaces atm 2/0`
		`ATM2/0 is administratively down, line protocol is down`
		
		`[Additional display text omitted from this example]`

Cisco uBR7223 router	**show interfaces atm**, followed by *slot/port* (port-adapter-slot-number/ interface-port-number)	The example is for interface 0 on a port adapter in port adapter slot 1.
		`Router(config)# show interfaces atm 1/0`
		`ATM1/0 is administratively down, line protocol is down`
		
		`[Additional display text omitted from this example]`

Cisco uBR7246 router	**show interfaces atm**, followed by *slot/port* (port-adapter-slot-number/ interface-port-number)	The example is for interface 0 on a port adapter in port adapter slot 2.
		`Router(config)# show interfaces atm 2/0`
		`ATM2/0 is administratively down, line protocol is down`
		
		`[Additional display text omitted from this example]`

VIP2 and VIP4 in Cisco 7000 series or Cisco 7500 series routers	**show interfaces atm**, followed by *slot/port-adapter/port* (interface-processor-slot-number/ port-adapter-slot-number/ interface-port-number)	The example is for interface 0 on a port adapter in port adapter slot 0 on a VIP2 or VIP4 installed in interface processor slot 5.
		`Router(config)# show interfaces atm 5/0/0`
		`ATM5/0/0 is administratively down, line protocol is down`
		
		`[Additional display text omitted from this example]`

Note For the Cisco 7206 and Cisco 7206VXR as router shelves, the **show interfaces** command requires a shelf number in the format **show interfaces atm** *shelf-number/port-adapter-slot/interface*.

Step 6 Reenable the interfaces by doing the following:

a. Repeat Step 3 to reenable an interface. Substitute the **no shutdown** command for the **shutdown** command.

b. Repeat Step 4 to write the new configuration to memory. Use the **copy running-config startup-config** command.

c. Repeat Step 5 to verify that the interfaces are in the correct state. Use the **show interfaces** command followed by the interface type and interface address of the interface.

For complete descriptions of software configuration commands, refer to the publications listed in the "Related Documentation" section on page viii.

Performing a Basic Configuration

Following are instructions for a basic configuration: enabling an interface, specifying IP routing, setting the MTU size, and configuring SONET framing. You might also need to enter other configuration subcommands, depending on the requirements for your system configuration and the protocols you plan to route on the interface. For complete descriptions of configuration subcommands and the configuration options available for ATM interfaces, refer to the appropriate software documentation.

In the following procedure, press the **Return** key after each step unless otherwise noted. At any time you can exit the privileged level and return to the user level by entering **disable** at the prompt as follows:

```
Router# disable

Router>
```

Step 1 Enter configuration mode and specify that the console terminal is the source of the configuration subcommands, as follows:

```
Router# configure terminal
Enter configuration commands, one per line. End with CNTL/Z.
Router(config)#
```

Step 2 Specify the first interface to configure by entering the **interface atm** subcommand, followed by the interface address of the interface you plan to configure. Table 5-3 provides examples.

Table 5-3 Examples of the interface atm Subcommand

Platform	Command	Example

Catalyst RSM/VIP2 in Catalyst 5000 family switches	**interface atm**, followed by *slot/port* (port-adapter-slot-number/ interface-port-number)	The example is for the first interface of a port adapter in port adapter slot 3.
		`Router(config)# interface atm 3/0`
		`Router(config-if)#`

Cisco 7120 series routers	**interface atm**, followed by *slot/port* (port-adapter-slot-number/ interface-port-number)	The example is for the first interface of a port adapter in port adapter slot 3.
		`Router(config)# interface atm 3/0`
		`Router(config-if)#`

Table 5-3 Examples of the interface atm Subcommand (continued)

Platform	Command	Example

Cisco 7140 series routers	**interface atm**, followed by *slot/port* (port-adapter-slot-number/ interface-port-number)	The example is for the first interface of a port adapter in port adapter slot 4.
		`Router(config)# interface atm 4/0`
		`Router(config-if)#`

Cisco 7200 series routers	**interface atm**, followed by *slot/port* (port-adapter-slot-number/ interface-port-number)	The example is for the first interface of a port adapter in port adapter slot 6.
		`Router(config)# interface atm 6/0`
		`Router(config-if)#`

Cisco uBR7223 router	**interface atm**, followed by *slot/port* (port-adapter-slot-number/ interface-port-number)	The example is for the first interface of a port adapter in port adapter slot 2.
		`Router(config)# interface atm 2/0`
		`Router(config-if)#`

Cisco uBR7246 router	**interface atm**, followed by *slot/port* (port-adapter-slot-number/ interface-port-number)	The example is for the first interface of a port adapter in port adapter slot 2.
		`Router(config)# interface atm 2/0`
		`Router(config-if)#`

VIP2 and VIP4 in Cisco 7000 series or Cisco 7500 series routers	**interface atm**, followed by *slot/port-adapter/port* (interface-processor-slot-number/ port-adapter-slot-number/ interface-port-number)	The example is for the first interface of a port adapter in port adapter slot 0 on a VIP2 or a VIP4 installed in interface processor slot 5.
		`Router(config)# interface atm 5/0/0`
		`Router(config-if)#`

Step 3 Assign an IP address and subnet mask to the interface (if IP routing is enabled on the system), by using the **ip address** subcommand, as in the following example:

```
Router(config-if)# ip address 10.0.0.0 10.255.255.255
```

Step 4 Add any additional configuration subcommands required to enable routing protocols and set the interface characteristics. Table 5-4 provides examples of other ATM subcommands.

Step 5 Reenable the interfaces using the **no shutdown** command. (See the "Shutting Down an Interface" section on page 5-2.)

Step 6 Configure all additional port adapter interfaces as required.

Step 7 After including all of the configuration subcommands to complete your configuration, press **Ctrl-Z**—hold down the **Control** key while you press **Z**—or enter **end** or **exit** to exit configuration mode and return to the EXEC command interpreter prompt.

Step 8 Write the new configuration to NVRAM as follows:

```
Router# copy running-config startup-config
[OK]
Router#
```

Table 5-4 Examples of ATM Configuration Subcommands

Command	Function	Example
mtu *bytes*	Sets the maximum transmission unit (MTU) size. Set *bytes* in the range of 64 through 9188 bytes. The default is 4470 bytes. (4470 bytes exactly matches FDDI and HSSI interfaces for autonomous switching.)	Router# **mtu** *64*
no mtu	Restores the default MTU size of 4470 bytes.	Router# **no mtu**
Router# atm sonet stm-1	Configures the PA-A1 ATM for the SONET STM-1 setting. In STM-1 mode, the PA-A1 ATM sends *idle* cells for cell-rate decoupling. In STS-3 mode, the PA-A1 ATM sends *unassigned* cells for cell-rate decoupling. The default SONET setting is STS-3.	**Router# atm sonet stm-1**
no atm sonet stm-1	Configures the PA-A1 ATM for the default STS-3 SONET setting.	Router# **no atm sonet stm-1**
atm clock internal	Configures the PA-A1 ATM to generate the transmit clock internally for SONET. By default, the PA-A1 ATM uses the recovered receive clock to provide transmit clocking.	**Router# atm clock internal**

This completes the procedure for creating a basic configuration.

Virtual Circuits

A virtual circuit (VC) is a point-to-point connection between remote hosts and routers. A VC is established for each ATM end node with which the router communicates. The characteristics of the VC are established when the VC is created and include the following:

- Quality of service (QoS)
- ATM adaptation layer 5 (AAL5) mode
- Encapsulation type (Logical Link Control/Subnetwork Access Protocol (, multiplexing device, and Q.2931 Signaling ATM Adaption Layer)

Each VC supports the following router functions:

- Multiprotocol (AppleTalk, CLNS, DECnet, IP, IPX, VINES, XNS)
- Fast switching of IP packets
- Pseudobroadcast support for multicast packets

By default, fast switching is enabled on all PA-A1 ATM interfaces. These switching features can be turned off with interface configuration commands. Autonomous switching must be explicitly enabled per interface.

Configuring Permanent Virtual Circuits

All permanent virtual circuits (PVCs) configured into the router remain active until the circuit is removed from the configuration. The PVCs also require a permanent connection to the ATM switch. All virtual circuit characteristics apply to PVCs. When a PVC is configured, all the configuration options are passed on to the PA-A1 ATM. These PVCs can be written into the nonvolatile RAM (NVRAM) as part of the Route Processor (RP) configuration and are used when the RP image is reloaded.

Some ATM switches have point-to-multipoint PVCs that do the equivalent of broadcasting. If a point-to-multipoint PVC exists, then that PVC can be used as the sole broadcast PVC for all multicast requests.

To configure a PVC, you must perform the following tasks:

1. Create a PVC.
2. Map a protocol address to a PVC.

See the *Wide-Area Networking Configuration Guide* for more information on creating PVCs on the Cisco 7000 family of routers. Also see the "ATM Configuration Examples" section on page 5-21.

Creating a PVC

When you create a PVC, you create a virtual circuit descriptor (VCD) and attach it to the virtual path identifier (VPI) and virtual channel identifier (VCI). A VCD is an PA-A1 ATM-specific mechanism that tells the PA-A1 ATM which VPI/VCI to use for a particular packet. The PA-A1 ATM requires this feature to manage packets for transmission. The number chosen for the VCD is independent of the VPI/VCI used. When you create a PVC, you also specify the AAL and encapsulation. A rate queue is used that matches the default peak and average rate, which are equal, and are specified in kilobits per second. To create a PVC on the PA-A1 ATM interface, use the **atm pvc** command. To remove a PVC, use the **no** form of this command.

```
atm pvc vcd vpi vci aal-encap
no atm pvc vcd
```

VIP2 and VIP4 example:

```
Router(config)# interface atm 2/2/0
Router(config-if)# atm pvc 2048 255 128 aal5snap
```

Catalyst RSM/VIP2 example:

```
Router(config)# interface atm 0/0
Router(config-if)# atm pvc 2048 255 128 aal5snap
```

Cisco 7100 series example:

```
Router(config)# interface atm 3/0
Router(config-if)# atm pvc 2048 255 128 aal5snap
```

Cisco 7200 series and Cisco uBR7200 series example:

```
Router(config)# interface atm 2/0
Router(config-if)# atm pvc 2048 255 128 aal5snap
```

Note For the Cisco 7206 and Cisco 7206VXR router shelves, the interface specified in the above example would include a shelf number. For example, the command interface **atm 5/2/0** specifies the first ATM interface of the port adapter in slot 2 of Cisco 7206 or 7206VXR router shelf 5.

The **atm pvc** command creates *PVC n* and attaches the PVC to *VPI* and *VCI*. The AAL used is specified by *aal* and encapsulation by *encap*.

The default for peak rate and average rate is that peak = average, and the PVC is automatically connected to the highest bandwidth rate queue available.

Table 5-5 atm-pvc Command Values

Command Value	Function
vcd	A per-PA-A1 ATM unique index value describing this VC in the range of 1 to MAXVC. (For Cisco 7200 series systems with PA-A1 ATM installed, MAXVC is fixed at 2047; the VCD value is not configurable. For Cisco 7000 series and Cisco 7500 series systems with a VIP2- or VIP4-based PA-A1 ATM installed, the value of MAXVC is 2047 and the VCD value is configurable from 1 to MAXVC.)
vpi	The ATM network VPI to use for this VC in the range of 0 through 255.
vci	The ATM network VCI to use for this VC in the range of 0 through 2048.
aal-encap *type*	Specifies the encapsulation type to use on this VC.
aal-encap aal5mux	Specifies the MUX-type for this VC. A protocol type must be specified.
aal-encap aal5snap	LLC/SNAP precedes the protocol datagram
aal-encap aal5nlpid	Network Layer Protocol Identification (NLPID) precedes the protocol datagram.
aal-encap qsaal	A signalling type VC.

Mapping a Protocol Address to a PVC

Cisco IOS software supports a mapping scheme that identifies the ATM address of remote hosts and routers. This address can be specified either as a VCD for a PVC or a network service access point (NSAP) address for SVC operation.

Enter mapping commands as groups; multiple map entries can exist in one map list. First create a map list, then associate the list with an interface.

Enter the **map-list** *name* command; then enter the protocol, protocol address, and other variables, as follows:

```
map-list name
protocol-type protocol-address [atm-vc vcd] | [atm-nsap nsap-address] [broadcast]
```

The **broadcast** keyword specifies that this map entry receives the corresponding protocol broadcast requests to the interface (for example, any network routing protocol updates). If you do not specify **broadcast**, the ATM software is prevented from sending routing protocol updates to the remote hosts.

After you create the map list, specify the ATM interface to which it applies with the interface command, as follows:

VIP2 and VIP4 example:

```
VIP2# interface atm 1/0/0
```

Catalyst RSM/VIP2 example:

```
RSM# interface atm 0/0
```

Cisco 7100 series, Cisco 7200 series, and Cisco uBR7200 series example:

```
7200# interface atm 1/0
```

Note For the Cisco 7206 and Cisco 7206VXR router shelves, the interface specified in the above example would include a shelf number. For example, the command interface **atm 5/2/0** would specify the first ATM interface of the port adapter in slot 2 of Cisco 7206 or 7206VXR router shelf 5.

Associate the map list to an interface with the following command:

map-group *name*

You can create multiple map lists, but only one map list can be associated with an interface. Different map lists can be associated with different interfaces. The following is an example of the commands to map a list to an interface on a Cisco 7200 series router:

```
interface ATM3/0
 ip address 1.1.1.2 255.255.255.0
 map-group atm1
 atm clock INTERNAL
 atm pvc 1 0 1 aal5snap
!
no ip classless
!
map-list atm1
 ip 1.1.1.1 atm-vc 1 broadcast
```

Configuring Switched Virtual Circuits

ATM switched virtual circuit (SVC) service operates similarly to X.25 SVC service, although ATM allows much higher throughput. Virtual circuits are created and released dynamically, providing user bandwidth on demand. This service requires a signaling protocol between the router and the switch.

The ATM signaling software provides a method of dynamically establishing, maintaining, and clearing ATM connections at the User-Network Interface (UNI). The ATM signaling software conforms to ATM Forum UNI 3.0.

In UNI mode, the user is the router, and the network is an ATM switch. This is an important distinction. The Cisco router does not perform ATM-level call routing. Instead, the ATM switch does the ATM call routing, and the router routes packets through the resulting circuit. The router is viewed as the user and the LAN interconnection device at the end of the circuit, and the ATM switch is viewed as the network.

The Cisco router is used primarily to interconnect LANs via an ATM network. You can connect not only routers to ATM switches, but also any computer with an ATM interface that conforms to the ATM Forum UNI specification. See the *Wide-Area Networking Configuration Guide* for more information on configuring SVCs for the Cisco 7500 series, Cisco 7000 series, and Cisco 7200 series of routers, and the Cisco uBR7200 series universal broadband routers. Also see the “ATM Configuration Examples” section on page 5-21,.

Maintaining PA-A1 ATM Statistics

The PA-A1 ATM maintains a count of certain errors. In addition to keeping a count of these errors, the PA-A1 ATM also captures a snapshot of the last VCI/VPI that caused the error. Each PA-A1 ATM error counter is 16 bits in size. Errors counted include the following:

- Cyclical redundancy check (CRC) errors
- Giants (a frame with more than 1518 bytes, including the CRC) received

- No buffers available
- Framing errors
- Application layer and physical layer errors
- Packet timeout errors on receive

Checking the Configuration

After configuring the new interface, use **show** commands to display the status of the new interface or all interfaces and use the **ping** and **loopback** commands to check connectivity. This section includes the following subsections:

- Using show Commands to Verify the New Interface Status, page 5-12
- Using show Commands to Display ATM Information, page 5-20
- Using the Debug ATM Commands, page 5-21
- Using the ping Command to Verify Network Connectivity, page 5-25
- Configuring an ATM Interface for Local Loopback, page 5-26

Using show Commands to Verify the New Interface Status

Table 5-6 demonstrates how you can use the **show** commands to verify that new interfaces are configured and operating correctly and that the PA-A1 ATM appears in them correctly. Sample displays of the output of selected **show** commands appear in the sections that follow. For complete command descriptions and examples, refer to the publications listed in the "Related Documentation" section on page viii.

Note The outputs that appear in this document may not match the output you receive when running these commands. The outputs in this document are examples only.

Table 5-6 Using show Commands

Command	Function	Example
show version or **show hardware**	Displays system hardware configuration, the number of each interface type installed, Cisco IOS software version, names and sources of configuration files, and boot images	`Router# show version`
show controllers	Displays all the current interface processors and their interfaces	`Router# show controllers`
show controllers cbus	Displays all the current interface processors and their interfaces for the Catalyst RSM/VIP2[1], the VIP2, and the VIP4	`Router# show controllers cbus`

Table 5-6 Using show Commands (continued)

Command	Function	Example
show diag *slot* **Note** The *slot* argument is not required with Catalyst 5000 family switches.	Displays types of port adapters installed in your system and information about a specific port adapter slot, interface processor slot, or chassis slot	`Router# show diag 2`
show interfaces *type* **0** or **1**/ *interface-port-number*	Displays status information about a specific type of interface (for example, atm) on a Catalyst RSM/VIP2	`Router# show interfaces atm 1/0`
show interfaces *type* **3**/ *interface-port-number*	Displays status information about a specific type of interface (for example, atm) in a Cisco 7120 series router	`Router# show interfaces atm 3/0`
show interfaces *type* **4**/ *interface-port-number*	Displays status information about a specific type of interface (for example, atm) in a Cisco 7140 series router	`Router# show interfaces atm 4/0`
show interfaces *type port-adapter-slot-number/ interface-port-number*	Displays status information about a specific type of interface (for example, atm) in a Cisco 7200 series router	`Router# show interfaces atm 1/0`
show interfaces *type* **1**/ *interface-port-number*	Displays status information about a specific type of interface (for example, atm) in a Cisco uBR7223 router	`Router# show interfaces atm 1/1`
show interfaces *type/ interface-processor-slot-number/ port-adapter-slot-number/interface-port-number*	Displays status information about a specific type of interface (for example, atm) on a VIP2 or a VIP4 in a Cisco 7000 series or a Cisco 7500 series router	`Router# show interfaces atm 3/1/0`
show protocols	Displays protocols configured for the entire system and for specific interfaces	`Router# show protocols`
show running-config	Displays the running configuration file	`Router# show running-config`
show startup-config	Displays the configuration stored in NVRAM	`Router# show startup-config`

1. Disregard the slot values for the Catalyst RSM/VIP2 for the **show controllers cbus** and the **show diag** commands as these slot values are not relevant to any physical connection.

Note For the Cisco 7206 and Cisco 7206VXR as router shelves, the **show interfaces** command requires a shelf number in the format **show interfaces** *type shelf-number/ port-adapter-slot/ interface*.

If an interface is down and you configured it as up, or if the displays indicate that the hardware is not functioning properly, ensure that the interface is properly connected and terminated. If you still have problems bringing the interface up, contact a service representative for assistance. This section includes the following subsections:

- Using the show version or show hardware Commands, page 5-14

- Using the show diag Command, page 5-16
- Using the show interfaces Command, page 5-18

Using the show version or show hardware Commands

Display the configuration of the system hardware, the number of each interface type installed, the Cisco IOS software version, the names and sources of configuration files, and the boot images, by using the **show version** (or **show hardware**) command.

Note The outputs that appear in this document may not match the output you receive when running these commands. The outputs in this document are examples only.

Catalyst RSM/VIP2 Catalyst 5000 Family Switches

Following is an example of the **show version** command from a Catalyst 5000 family switch with the PA-A1 ATM:

```
Router# show version
Cisco Internetwork Operating System Software
IOS (tm) C5RSM Software (C5RSM-JSV-M), Version 11.2(9)P
Copyright (c) 1986-1997 by cisco Systems, Inc.
Compiled Tue 24-Jun-97 17:09 by shj
Image text-base: 0x600108E0, data-base: 0x6095E000

ROM: System Bootstrap, Version 11.2(15707)
BOOTFLASH: C5RSM Software (C5RSM-JSV-M), Version 11.2

yosemite_3 uptime is 17 hours, 17 minutes
System restarted by reload
System image file is "dirt/yosemite/c5rsm-jsv-mz.7P", booted via tftp from 223.2
55.254.254

cisco RSP2 (R4700) processor with 32768K bytes of memory.
R4700 processor, Implementation 33, Revision 1.0
Last reset from power-on
G.703/E1 software, Version 1.0.
SuperLAT software copyright 1990 by Meridian Technology Corp).
Bridging software.
X.25 software, Version 2.0, NET2, BFE and GOSIP compliant.
TN3270 Emulation software.
1 EIP controller (2 Ethernet).
1 VIP2 controller (1 ATM).
2 Ethernet/IEEE 802.3 interfaces.
1 ATM network interface.
125K bytes of non-volatile configuration memory.

8192K bytes of Flash internal SIMM (Sector size 256K).
No slave installed in slot 7.
Configuration register is 0x100
```

Cisco 7100 Series Routers

Following is an example of the **show version** command from a Cisco 7120 series router with the PA-A1 ATM:

```
Router# show version
Cisco Internetwork Operating System Software
IOS (tm) 7100 Software (C7100-J-M), Version 11.1(10)CA
```

```
Synced to mainline version: 11.1(10)CA
Copyright (c) 1986-1997 by cisco Systems, Inc.
Compiled Tue 07-Jan-97 21:02 by biff
Image text-base: 0x600088F0, data-base: 0x606B2000

ROM: System Bootstrap, Version 11.1(10)CA, RELEASE SOFTWARE
ROM: 7100 Software (C7100-BOOT-M), Version 11.1(10)CA, RELEASE SOFTWARE

Router uptime is 1 minute
System restarted by reload
System image file is “biff/c7100-j-mz.970107”, booted via tftp from 223.255.254.254

cisco 7120 (NPE150) processor with 26624K/6144K bytes of memory.
R4700 processor, Implementation 33, Revision 1.0 (512KB Level 2 Cache)
Last reset from power-on
Bridging software.
SuperLAT software copyright 1990 by Meridian Technology Corp).
X.25 software, Version 2.0, NET2, BFE and GOSIP compliant.
TN3270 Emulation software (copyright 1994 by TGV Inc).
4 Ethernet/IEEE 802.3 interfaces.
1 ATM network interface.
125K bytes of non-volatile configuration memory.
1024K bytes of packet SRAM memory.

20480K bytes of Flash PCMCIA card at slot 0 (Sector size 128K).
4096K bytes of Flash internal SIMM (Sector size 256K).
Configuration register is 0x0
```

Cisco 7200 Series and Cisco uBR7200 Series Routers

Following is an example of the **show version** command from a Cisco 7200 series router with the PA-A1 ATM:

```
Router# show version
Cisco Internetwork Operating System Software
IOS (tm) 7200 Software (C7200-J-M), Version 11.1(10)CA
Synced to mainline version: 11.1(10)CA
Copyright (c) 1986-1997 by cisco Systems, Inc.
Compiled Tue 07-Jan-97 21:02 by biff
Image text-base: 0x600088F0, data-base: 0x606B2000

ROM: System Bootstrap, Version 11.1(10)CA, RELEASE SOFTWARE
ROM: 7200 Software (C7200-BOOT-M), Version 11.1(10)CA, RELEASE SOFTWARE

Router uptime is 1 minute
System restarted by reload
System image file is “biff/c7200-j-mz.970107”, booted via tftp from 223.255.254.254

cisco 7206 (NPE150) processor with 26624K/6144K bytes of memory.
R4700 processor, Implementation 33, Revision 1.0 (512KB Level 2 Cache)
Last reset from power-on
Bridging software.
SuperLAT software copyright 1990 by Meridian Technology Corp).
X.25 software, Version 2.0, NET2, BFE and GOSIP compliant.
TN3270 Emulation software (copyright 1994 by TGV Inc).
4 Ethernet/IEEE 802.3 interfaces.
1 ATM network interface.
125K bytes of non-volatile configuration memory.
1024K bytes of packet SRAM memory.

20480K bytes of Flash PCMCIA card at slot 0 (Sector size 128K).
4096K bytes of Flash internal SIMM (Sector size 256K).
```

```
Configuration register is 0x0
```

VIP2 or VIP4 in Cisco 7000 Series and Cisco 7500 Series Routers

Following is an example of the **show version** command from a Cisco 7500 series router with the PA-A1 ATM:

```
Router# show version
Cisco Internetwork Operating System Software
IOS (tm) GS Software (RSP-PV-M), Version 11.1(9)CA1
Synced to mainline version: 11.1(9)CA1
Copyright (c) 1986-1997 by cisco Systems, Inc.
Compiled Wed 08-Jan-97 04:17 by biff
Image text-base: 0x60010900, data-base: 0x60746000

ROM: System Bootstrap, Version 11.1(9)CA1 RELEASE SOFTWARE
ROM: GS Bootstrap Software (RSP-BOOT-M), Version 11.1(9)CA1, RELEASE SOFTWARE

Router uptime is 1 minute
System restarted by reload
System image file is “biff/rsp-pv-mz.970107”, booted via tftp from 223.255.254.254

cisco RSP2 (R4600) processor with 16384K bytes of memory.
R4600 processor, Implementation 32, Revision 2.0
Last reset from power-on
G.703/E1 software, Version 1.0.
X.25 software, Version 2.0, NET2, BFE and GOSIP compliant.
Chassis Interface.
1 EIP controller (2 Ethernet).
1 VIP2 controller (1 ATM).
```

Using the show diag Command

Display the types of port adapters installed in your system (and specific information about each) using the **show diag** *slot* command, where *slot* is the *port adapter slot* in a Cisco 7100 series, Cisco 7200 series, and Cisco uBR7200 series router and the *interface processor slot* in a Cisco 7000 series or Cisco 7500 series router with a VIP2 or a VIP4.

Note The outputs that appear in this document may not match the output you receive when running these commands. The outputs in this document are examples only.

Catalyst RSM/VIP2 in Catalyst 5000 Family Switches

Note The *slot* argument is not required for Catalyst 5000 family switches.

Following is an example of the **show diag** command that shows a PA-A1 ATM on a Catalyst RSM/VIP:

```
Router# show diag
Slot 0:
        Physical slot 0, ~physical slot 0xF, logical slot 0, CBus 0
        Microcode Status 0x4
        Master Enable, LED, WCS Loaded
        Board is analyzed
        Pending I/O Status: None
        EEPROM format version 1
```

```
        VIP2 controller, HW rev 2.3, board revision A0
        Serial number: 03515951  Part number: 73-1684-03
        Test history: 0x00        RMA number: 00-00-00
        Flags: cisco 7000 board; 7500 compatible

        EEPROM contents (hex):
          0x20: 01 15 02 03 00 35 A6 2F 49 06 94 03 00 00 00 00
          0x30: 50 00 00 00 00 00 00 00 00 00 00 00 00 00 00 00

        Slot database information:
        Flags: 0x4      Insertion time: 0x10CC (00:01:19 ago)

        Controller Memory Size: 16 MBytes DRAM, 1024 KBytes SRAM

        PA Bay 0 Information:
                ATM LITE PA, 1 ports
                EEPROM format version 1
                HW rev 1.0, Board revision UNKNOWN
                Serial number: 02025546  Part number: 73-1843-02
```

Cisco 7100 Series Routers

Following is an example of the **show diag** *slot* command that shows a PA-A1 ATM in port adapter slot 3 of a Cisco 7120 series router:

```
Router# show diag 3
Slot 3:
        ATM OC3 (MM) port adapter, 1 port
        Port adapter is analyzed
        Port adapter insertion time 00:02:05 ago
        Hardware revision 1.0           Board revision UNKNOWN
EEPROM format version 1
        EEPROM contents (hex):
          0x20: 01 17 01 00 00 2B 24 DB 49 07 33 02 FF FF FF FF
          0x30: 04 00 FF FF FF FF FF FF FF FF FF FF FF FF FF FF
```

Cisco 7200 Series and Cisco uBR7200 Series Routers

Following is an example of the **show diag** *slot* command that shows a PA-A1 ATM in port adapter slot 3 of a Cisco 7200 series router:

```
Router# show diag 3
Slot 3:
        ATM OC3 (MM) port adapter, 1 port
        Port adapter is analyzed
        Port adapter insertion time 00:02:05 ago
        Hardware revision 1.0           Board revision UNKNOWN
        Serial number     2827483       Part number    73-1843-02
        Test history      0xFF          RMA number     255-255-255
        EEPROM format version 1
        EEPROM contents (hex):
          0x20: 01 17 01 00 00 2B 24 DB 49 07 33 02 FF FF FF FF
          0x30: 04 00 FF FF FF FF FF FF FF FF FF FF FF FF FF FF
```

VIP2 or VIP4 in Cisco 7000 Series and Cisco 7500 Series Routers

Following is an example of the **show diag** *slot* command that shows a PA-A1 ATM in port adapter slot 0 on a VIP2 or VIP4 in interface processor slot 0:

```
Router# show diag 0
Slot 0:
        Physical slot 0, ~physical slot 0xF, logical slot 0, CBus 0
```

```
Microcode Status 0x4
Master Enable, LED, WCS Loaded
Board is analyzed
Pending I/O Status: None
EEPROM format version 1
VIP2 controller, HW rev 2.3, board revision A0
Serial number: 03515951 Part number: 73-1684-03
Test history: 0x00        RMA number: 00-00-00
Flags: cisco 7000 board; 7500 compatible

EEPROM contents (hex):
  0x20: 01 15 02 03 00 35 A6 2F 49 06 94 03 00 00 00 00
  0x30: 50 00 00 00 00 00 00 00 00 00 00 00 00 00 00 00

Slot database information:
Flags: 0x4      Insertion time: 0x10CC (00:01:19 ago)

Controller Memory Size: 16 MBytes DRAM, 1024 KBytes SRAM

PA Bay 0 Information:
        ATM PA, 1 ports
        EEPROM format version 1
        HW rev 1.0, Board revision UNKNOWN
        Serial number: 02025546 Part number: 73-1843-02
```

Using the show interfaces Command

The **show interfaces** command displays status information (including the physical slot and interface address) for the interfaces you specify. All of the examples that follow specify ATM interfaces.

For complete descriptions of interface subcommands and the configuration options available for Catalyst RSM/VIP2, Cisco 7100 series, Cisco 7200 series, Cisco uBR7200 series, and Cisco 7500 series router with a VIP2 or a VIP4, refer to the publications listed in the "Related Documentation" section on page viii.

Note The outputs that appear in this document may not match the output you receive when running these commands. The outputs in this document are examples only.

Catalyst RSM/VIP2 in Catalyst 5000 Family Switches

In this example, the PA-A1 ATM is in port adapter slot 0.

```
Router# show interfaces atm 0/0
ATM0/0 is up, line protocol is up
  Hardware is cxBus ATM
  Internet address is 1.1.1.1/24
  MTU 4470 bytes, sub MTU 4470, BW 156250 Kbit, DLY 80 usec, rely 255/255, load 1/255
  Encapsulation ATM, loopback not set, keepalive set (10 sec)
  Encapsulation(s): AAL5, PVC mode
  256 TX buffers, 256 RX buffers,
  2048 maximum active VCs, 1024 VCs per VP, 1 current VCCs
  VC idle disconnect time: 300 seconds
  Last input never, output 00:00:05, output hang never
  Last clearing of "show interface" counters never
  Queueing strategy: fifo
  Output queue 0/40, 0 drops; input queue 0/75, 0 drops
  5 minute input rate 0 bits/sec, 1 packets/sec
  5 minute output rate 0 bits/sec, 1 packets/sec
     5 packets input, 560 bytes, 0 no buffer
```

```
     Received 0 broadcasts, 0 runts, 0 giants
     0 input errors, 0 CRC, 0 frame, 0 overrun, 0 ignored, 0 abort
     5 packets output, 560 bytes, 0 underruns
     0 output errors, 0 collisions, 0 interface resets
     0 output buffer failures, 0 output buffers swapped out
```

Cisco 7100 Series, Cisco 7200 Series and Cisco uBR7200 Series Routers

Following is an example of the **show interfaces atm** command. In this example, the PA-A1 ATM is in port adapter slot 3:

```
Router# show interfaces atm 3/0
ATM3/0 is up, line protocol is up
  Hardware is TI1570 ATM
  Internet address is 1.1.1.2/24
  MTU 4484 bytes, sub MTU 4470, BW 156250 Kbit, DLY 80 usec, rely 20/255, load 1/255
  Encapsulation ATM, loopback not set, keepalive set (10 sec)
  Encapsulation(s): AAL5, PVC mode
  2048 maximum active VCs, 1024 VCs per VP, 1 current VCCs
  VC idle disconnect time: 300 seconds
  Last input never, output 00:00:21, output hang never
  Last clearing of “show interface” counters 00:00:23
  Queueing strategy: fifo
  Output queue 0/40, 0 drops; input queue 0/75, 0 drops
  5 minute input rate 0 bits/sec, 0 packets/sec
  5 minute output rate 0 bits/sec, 0 packets/sec
     5 packets input, 560 bytes, 0 no buffer
     Received 0 broadcasts, 0 runts, 0 giants
     0 input errors, 0 CRC, 0 frame, 0 overrun, 0 ignored, 0 abort
     5 packets output, 560 bytes, 0 underruns
     0 output errors, 0 collisions, 0 interface resets
     0 output buffer failures, 0 output buffers swapped out
```

Note For the Cisco 7206 and Cisco 7206VXR router shelves, the **show interfaces** command requires a shelf number in the format **show interfaces** *type shelf-number/port-adapter-slot/interface*.

VIP2 and VIP4 in Cisco 7000 Series or Cisco 7500 Series Routers

Following is an example of the **show interfaces** command for an ATM-configured VIP2 or VIP4 in interface processor slot 5, in port adapter slot 0.

```
Router# show interfaces atm 5/0/0
ATM5/0/0 is up, line protocol is up
  Hardware is cyBus ATM
  Internet address is 1.1.1.1/24
  MTU 4470 bytes, sub MTU 4470, BW 156250 Kbit, DLY 80 usec, rely 255/255, load 1/255
  Encapsulation ATM, loopback not set, keepalive set (10 sec)
  Encapsulation(s): AAL5, PVC mode
  256 TX buffers, 256 RX buffers,
  2048 maximum active VCs, 1024 VCs per VP, 1 current VCCs
  VC idle disconnect time: 300 seconds
  Last input never, output 00:00:05, output hang never
  Last clearing of “show interface” counters never
  Queueing strategy: fifo
  Output queue 0/40, 0 drops; input queue 0/75, 0 drops
  5 minute input rate 0 bits/sec, 1 packets/sec
  5 minute output rate 0 bits/sec, 1 packets/sec
     5 packets input, 560 bytes, 0 no buffer
     Received 0 broadcasts, 0 runts, 0 giants
     0 input errors, 0 CRC, 0 frame, 0 overrun, 0 ignored, 0 abort
     5 packets output, 560 bytes, 0 underruns
```

```
     0 output errors, 0 collisions, 0 interface resets
     0 output buffer failures, 0 output buffers swapped out
2 Ethernet/IEEE 802.3 interfaces.
1 ATM network interface.
125K bytes of non-volatile configuration memory.

8192K bytes of Flash internal SIMM (Sector size 256K).
No slave installed in slot 7.
Configuration register is 0x100
```

Using show Commands to Display ATM Information

ATM **show** commands are available to display the current state of the ATM network and the connected VCs.

Table 5-7 provides examples.

Table 5-7 ATM show Commands

Command	Function	Example

show atm-vc[vcd]	Displays current VCs and traffic information for the specified VCD	The example displays statistics for all PVCs:
		`Router# show atm-vc`
		`Intfc. VCD VPI VCI Input Output AAL/Encaps Peak Avg. Burst`
		`ATM4/0 2 2 2 951`
		`[Additional display text omitted]`
		The example is for the **show atm-vc** *n* command, where *n* is the VCD unique index value, to display statistics for a specific PVC:
		`Router# show atm-vc 4`
		`ATM4/0: VCD: 4, VPI: 4, VCI: 4, etype:0xBAD, AAL5 - MUX, Flags: 0x34`
		`PeakRate: 0, Average Rate: 0, Burst: 0 *32cells, Vcmode: 0xE200`
		`InPkts: 164, OutPkts: 0, InFast: 0, OutFast: 0, Broadcasts: 0`

show atm traffic	Displays global information about ATM traffic to and from all ATM networks connected to the router	`Router# show atm traffic`
		`5 Input packets`
		`5 Output packets`
		`0 Broadcast packets`
		`0 Packets received on non-existent VC`
		`0 Packets attempted to send on non-existent VC`
		`0 OAM cells received`
		`0 OAM cells sent`

Table 5-7 ATM show Commands (continued)

Command	Function	Example

show atm map	Displays the active list of ATM static maps to remote hosts on an ATM network	`Router# show atm map`
		`Map list atm1 : PERMANENT`
		`ip 1.1.1.1 maps to VC 1, broadcast`

show controllers cbus	Displays the internal status of each CxBus or CyBus interface processor, including the interface processor slot location, the card hardware version and the currently running microcode version. (The **show controllers cbus** command also lists each interface (port) on each interface processor, including the logical interface number, interface type, physical (slot/port) address, and hardware (station address) of each interface.)	The following example shows an ATM port adapter installed in interface processor slot 0:
		`Router# show controllers cbus`
		`slot0: VIP2, hw 2.3, sw 21.40, ccb 5800FF20, cmdq 48000080, vps 8192`
		`  software loaded from system`
		`  IOS (tm) VIP Software (SVIP-DW-M), Experimental Version 11.1(10) [biff 272]`
		`  ROM Monitor version 17.0`
		`  ATM0/0/0, applique is SONET (155Mbps)`
		`  gfreeq 48000158, lfreeq 48000168 (4544 bytes), throttled 0`
		`  rxlo 4, rxhi 329, rxcurr 1, maxrxcurr 2`
		`  txq 48001A00, txacc 48001A02 (value 329), txlimit 329`

Using the Debug ATM Commands

The following **debug** commands are available to aid in solving ATM network problems:

- To create a dump of all protocol packets, use the **debug atm packet** command. This command displays the contents of the SNAP/NLPID/SMDS header followed by the first 40 bytes of a packet in hexadecimal format.
- To display errors, use the **debug atm errors** command. This command displays information from all detected ATM errors. This includes such errors as encapsulation failures and errors during ATM configuration.
- To display ATM events, use the **debug atm events** command. This command displays event changes to the ATM port adapter. Reset configurations, VC configurations, and ATM port adapter configurations are displayed here.
- To display information about OAM cells, use the **debug atm oam** command. This command displays the contents of OAM cells as they arrive from the network.

After using a **debug** command, turn off debugging with the **no debug** command.

ATM Configuration Examples

For detailed configuration examples, refer to the router software publications listed in the “Related Documentation” section on page viii. This section contains the following subsections:

- Example of PVCs with AAL5 and LLC/SNAP Encapsulation, page 5-22

- Example of PVCs in a Fully Meshed Network, page 5-23
- Example of SVCs in a Fully Meshed Network, page 5-24
- Example of Connecting Two ATM Port Adapters Back-to-Back, page 5-24

For examples of emulated LAN configurations, see the *Wide-Area Networking Configuration Guide*.

Note For the Cisco 7206 and Cisco 7206VXR router shelves, the interface specified in the following examples would include a shelf number. For example, the command interface **atm 5/3/0** specifies the first ATM interface of the port adapter in slot 3 of Cisco 7206 or 7206VXR router shelf 5.

Example of PVCs with AAL5 and LLC/SNAP Encapsulation

The following example creates PVC 5 on ATM interface 3/0 using LLC/SNAP encapsulation over AAL5. ATM interface 3/0 (IP address 10.0.0.0 10.255.255.255) connects with the ATM interface (IP address 10.0.0.0 10.255.255.255) at the other end of the connection. The static map-list named *atm1* declares that the next node is a broadcast point for multicast packets from IP.

```
interface ATM3/0
ip address 10.0.0.0 10.255.255.255
 map-group atm1
 atm clock INTERNAL
 atm pvc 1 0 1 aal5snap
!
no ip classless
!
map-list atm1
 ip 1.1.1.1 atm-vc 1 broadcast
```

The following example is of a typical ATM configuration for a PVC:

```
interface ATM4/0
ip address 10.0.0.0 10.255.255.255
map-group atm
atm pvc 1 1 1 aal5snap
atm pvc 2 2 2 aal5snap
atm pvc 6 6 6 aal5snap
atm pvc 7 7 7 aal5snap
clns router iso-igrp comet
!
router iso-igrp comet
net 47.0004.0001.0000.0c00.6666.00
!
router igrp 109
network 131.108.0.0
!
ip domain-name CISCO.COM
!
map-list atm
ip 10.0.0.0 atm-vc 1 broadcast
clns 47.0004.0001.0000.0c00.6e26.00 atm-vc 6 broadcast
atm-vc 2 broadcast
```

Example of PVCs in a Fully Meshed Network

Figure 5-1 illustrates a fully meshed network. The following configuration examples for Routers A, B, and C follow the figure. In this example, the routers are configured to use PVCs. *Fully meshed* indicates that each network node has either a physical circuit or a virtual circuit connecting it to every other network node. The two map-list statements configured in Router A identify the ATM addresses of Routers B and C. The two map-list statements in Router B identify the ATM addresses of Routers A and C. The two map list statements in Router C identify the ATM addresses of Routers A and B.

Figure 5-1 Fully Meshed ATM Configuration Example

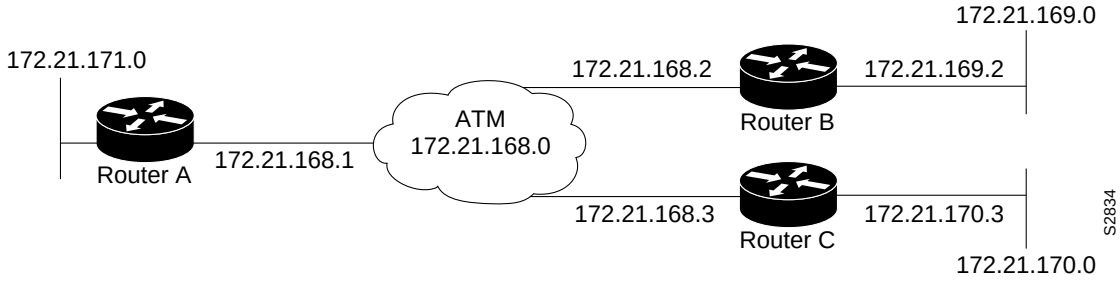

Router A

```
ip routing
!
interface atm 4/0
ip address 131.108.168.1 255.255.255.0
atm pvc 1 0 10 aal5snap
atm pvc 2 0 20 aal5snap
map-group test-a
!
map-list test-a
ip 131.108.168.2 atm-vc 1 broadcast
ip 131.108.168.3 atm-vc 2 broadcast
```

Router B

```
ip routing
!
interface atm 2/0
ip address 131.108.168.2 255.255.255.0
atm pvc 1 0 20 aal5snap
atm pvc 2 0 21 aal5snap
map-group test-b
!
map-list test-b
ip 131.108.168.1 atm-vc 1 broadcast
ip 131.108.168.3 atm-vc 2 broadcast
```

Router C

```
ip routing
!
interface atm 4/0
ip address 131.108.168.3 255.255.255.0
atm pvc 2 0 21 aal5snap
atm pvc 4 0 22 aal5snap
map-group test-c
!
map-list test-c
ip 131.108.168.1 atm-vc 2 broadcast
```

```
ip 131.108.168.2 atm-vc 4 broadcast
```

Example of SVCs in a Fully Meshed Network

The following example is also a configuration for the fully meshed network shown in Figure 5-1, but using SVCs. PVC 1 is the signaling PVC.

Router A

```
interface atm 4/0
ip address 131.108.168.1 255.255.255.0
map-group atm
atm nsap-address AB.CDEF.01.234567.890A.BCDE.F012.3456.7890.1234.12
atm pvc 1 0 5 qsaal
!
map-list atm
ip 131.108.168.2 atm-nsap BC.CDEF.01.234567.890A.BCDE.F012.3456.7890.1334.13
ip 131.108.168.3 atm-nsap BC.CDEF.01.234567.890A.BCDE.F012.3456.7890.1224.12
```

Router B

```
interface atm 2/0
ip address 131.108.168.2 255.255.255.0
map-group atm
atm nsap-address BC.CDEF.01.234567.890A.BCDE.F012.3456.7890.1334.13
atm pvc 1 0 5 qsaal
!
map-list atm
ip 131.108.168.1 atm-nsap AB.CDEF.01.234567.890A.BCDE.F012.3456.7890.1234.12
ip 131.108.168.3 atm-nsap BC.CDEF.01.234567.890A.BCDE.F012.3456.7890.1224.12
```

Router C

```
interface atm 4/0
ip address 131.108.168.3 255.255.255.0
map-group atm
atm nsap-address BC.CDEF.01.234567.890A.BCDE.F012.3456.7890.1224.12
atm pvc 1 0 5 qsaal
!
map-list atm
ip 131.108.168.1 atm-nsap AB.CDEF.01.234567.890A.BCDE.F012.3456.7890.1234.12
ip 131.108.168.2 atm-nsap BC.CDEF.01.234567.890A.BCDE.F012.3456.7890.1334.13
```

Example of Connecting Two ATM Port Adapters Back-to-Back

Two routers, each containing a PA-A1 ATM can be connected directly with a standard cable, which allows you to verify the operation of the ATM port or to directly link the routers in order to build a larger node.

Define Cisco 7500 series interfaces by interface type and physical slot or port location. The **show interfaces** command displays the logical unit number in the router and the physical slot or port location in the Cisco 7500 series router. For complete configuration descriptions and examples, refer to the router software publications appropriate for your Cisco IOS software release.

To connect two routers, attach the cable between the ATM port on each.

By default, the PA-A1 ATM expects a connected ATM switch to provide transmit clocking. To have the PA-A1 ATM generate the transmit clock internally for SONET physical layer interface module (PLIM) operation, add the **atm clock internal** command to your configuration.

Note For SONET interfaces, one of the ATM port adapters in each router must be configured to supply its internal clock to the line.

Following is an example of configuration file commands for two routers connected through their SONET interface:

First router:

```
interface ATM3/0
ip address 192.168.1.10 255.0.0.0
no keepalive
map-group atm-in
atm clock internal
atm pvc 1 1 5 aal5snap
!
map-list atm-in
ip 192.168.1.20 atm-vc 1 broadcast
```

Second router:

```
interface ATM3/0
ip address 192.168.1.20 255.0.0.0
no keepalive
map-group atm-in
atm clock internal
atm pvc 1 1 5 aal5snap
!
map-list atm-in
ip 192.168.1.10 atm-vc 1 broadcast
```

This completes the PA-A1 ATM interface installation and configuration.

Using the ping Command to Verify Network Connectivity

Using the **ping** command, you can verify that an interface port is functioning properly. This section provides brief descriptions of this command. Refer to the publications listed in the "Related Documentation" section on page viii for detailed command descriptions and examples.

The **ping** command sends echo request packets out to a remote device at an IP address that you specify. After sending an echo request, the command waits a specified time for the remote device to reply. Each echo reply is displayed as an exclamation point (!) on the console terminal; each request that is not returned before the specified timeout is displayed as a period (.). A series of exclamation points (!!!!!) indicates a good connection; a series of periods (.....) or the messages [timed out] or [failed] indicate a bad connection.

Following is an example of a successful **ping** command to a remote server with the address 10.0.0.10:

```
Router# ping 10.0.0.10
Type escape sequence to abort.
Sending 5, 100-byte ICMP Echoes to 10.0.0.10, timeout is 2 seconds:
!!!!!
Success rate is 100 percent (5/5), round-trip min/avg/max = 1/15/64 ms
Router#
```

If the connection fails, verify that you have the correct IP address for the destination and that the device is active (powered up), and repeat the **ping** command.

Proceed to the next section "Configuring an ATM Interface for Local Loopback" to finish checking network connectivity.

Configuring an ATM Interface for Local Loopback

To configure an ATM interface for local loopback (useful for checking that the PA-A1 ATM is working), use the following command:

```
Router# loopback diagnostic
Router# no loopback diagnostic
```

The **no** form of the command turns off local loopback.

To configure an ATM interface for external loopback, use the following command:

```
Router# loopback line
Router# no loopback line
```

The **no** form of the command turns off external loopback at the line.