Installing Hardware Options for the WAVE-7541, WAVE-7571, and WAVE-8541

This chapter provides basic instructions for installing hardware options in your WAVE-7541, WAVE-7571, and WAVE-8541. These instructions are intended for technicians who are experienced with setting up Cisco WAVE-7541, WAVE-7571, and WAVE-8541 hardware.

This chapter contains the following sections:

- Installing a Cisco WAVE Interface Module
- Replacing a Hard Disk Drive/Solid State Drive
- Replacing a Fan
- Replacing a Power Supply

Installing a Cisco WAVE Interface Module

In addition to the two onboard Gigabit Ethernet ports, the WAVE-7541, WAVE-7571, and WAVE-8541 can accommodate one optional Interface Module:

- 4-port Gigabit Ethernet Copper Bypass Interface Module
- 8-port Gigabit Ethernet Copper Bypass Interface Module
- 4-port Gigabit Ethernet Fiber Optic Bypass Interface Module
- 2-port 10 Gigabit Ethernet Fiber Optic SPF+ Interface Module

For information on the features of the Cisco WAVE Interface Modules and cabling requirements, see Chapter 5, “WAVE Interface Modules.”

Note Interface Modules are not hot-swappable therefore it is necessary to power the system down before installing or replacing.

Caution To maintain proper system cooling, do not operate the appliance for more than 1 minute without either a Cisco Interface Module or a filler panel installed in the bay.

To install a Cisco Interface Module in the Interface Module slot, follow these steps:

Step 1 Review the information in the Safety Warnings and Cautions and Safety Guidelines sections in Chapter 2, "Preparing to Install the WAVE-7541, WAVE-7571, and WAVE-8541."

Step 2 Power down the appliance.

Note You must power down the appliance before installing or removing an Interface Module. Interface Modules are not hot-swappable.

Step 3 Locate the Interface Module slot in the appliance chassis and slide the Interface Module into the slot until the ejector lever is seated.

To remove an Interface Module, first use the ejector lever to unlatch and then pull out the Interface Module. (See Figure 4-1.)

Figure 4-1 Interface Module—Removal

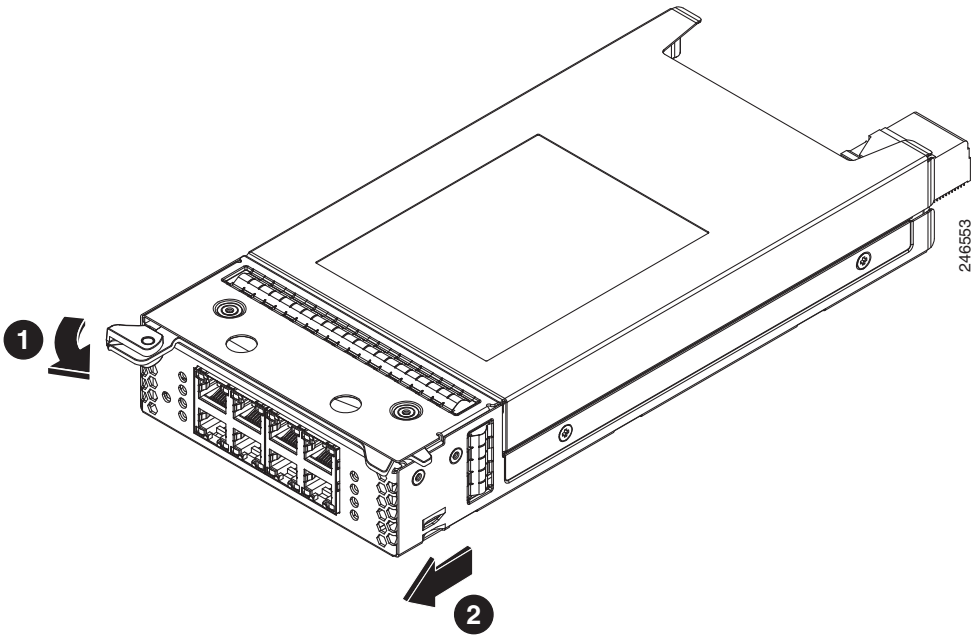

Step 4 Power on the appliance.

Step 5 For information about connecting cables to the Cisco WAVE Interface Module ports, see Chapter 5, "WAVE Interface Modules."

Replacing a Hard Disk Drive/Solid State Drive

The WAVE appliance supports as many as eight 2.5-inch (Small Form Factor) SAS hard drives.

Note The WAVE-8541 supports both Solid State Drives and Hard Disk Drives. You cannot mix HDD and SSD in the same chasis.
For details about the WAVE-8541 appliance specifications, see Appendix A, "Appliance Specifications".

Hard drives are hot-swappable therefore it is not necessary to power the system down before installing or replacing.

When removing hard drives from the WAVE appliance, observe the following general guidelines:

- The system automatically sets all drive numbers.
- Drives must be the same capacity to provide the greatest storage space efficiency when drives are grouped together into the same drive array.

Note All hard disk drives being used in the appliance must be identical.

Caution To maintain proper system cooling, do not operate the appliance for more than 1 minute without either a hard disk drive or a filler panel installed in each bay.

To replace a hard disk drive in a bay, follow these steps:

Step 1 Review the information in the Safety Warnings and Cautions and Safety Guidelines sections in Chapter 2, "Preparing to Install the WAVE-7541, WAVE-7571, and WAVE-8541."

Step 2 First press the button and swing the handle out. (See Figure 4-2).

Note Wait 5 seconds before removing to let the disk spin down.

Figure 4-2 Removing a Hard Disk Drive

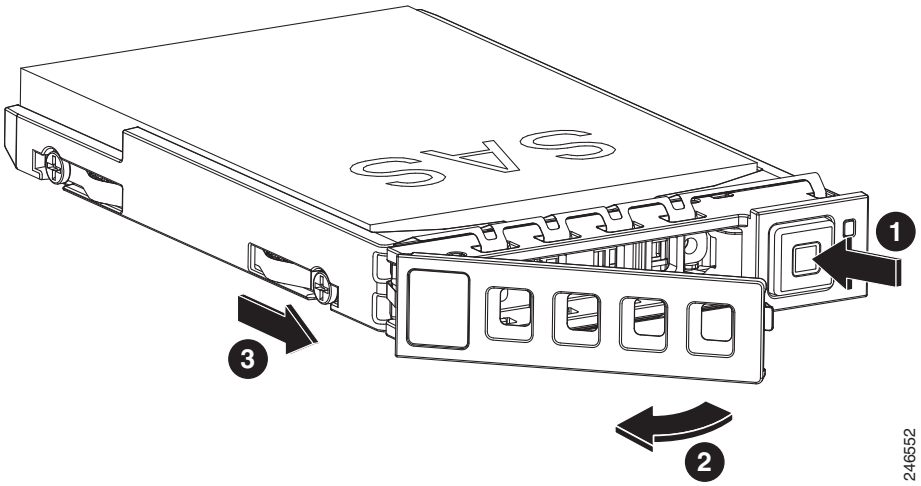

Step 3 After waiting 5 seconds, pull the handle to remove the drive assembly from the bay.

Step 4 Within one minute, insert the new drive into the same slot by aligning the replacement drive assembly with guide rails in the bay and sliding the drive assembly into the bay until it stops. Make sure that the drive is properly seated in the bay.

Step 5 Close the drive handle.

Step 6 Check the hard disk drive status LED after the system has booted to verify that the hard disk drive is operating correctly. If the amber hard disk drive status LED for a drive is lit continuously, that drive is faulty and must be replaced. If the green hard disk drive activity LED is flashing, the drive is being accessed.

Step 7 Wait 1 minute and then verify that the replaced disk drive is in the Rebuilding state by using the **show disks details** command in EXEC mode.

Note The system automatically starts the rebuild operation when it detects the removal and reinsertion of a drive that is part of the logical RAID drive.

Step 8 Wait until the rebuild operation is complete. A disk rebuild operation may take several hours. You can check if the rebuild operation is complete by using the **show disk details** command in EXEC mode. The physical drive state will be Online and the RAID logical drive state will be Okay after the rebuild operation is completed.

Step 9 Use the **show disk tech** command in EXEC mode to verify that the firmware and BIOS information is correct for both hard drives.

If you have multiple disk failures and your RAID-1 logical status is Offline, you must recreate the RAID-1 array. For more information on disk removal and replacement procedures, see the *Cisco Wide Area Application Services Configuration Guide* chapter named "Maintaining Your WAAS System."

Replacing a Fan

The WAVE appliance supports nine fan assemblies that are hot-swappable. There are three large fan assemblies and six small fan assemblies.

Fan assemblies can only be inserted in one orientation.

Note Fan assemblies must be inserted and can only function with the surface marked "TOP" facing up.

Caution To maintain proper system cooling, do not operate the appliance for more than 1 minute without a fan installed in each bay.

To replace a fan assembly, follow these steps:

Step 1 Review the information in the Safety Warnings and Cautions and Safety Guidelines sections in Chapter 2, "Preparing to Install the WAVE-7541, WAVE-7571, and WAVE-8541."

Step 2 Disengage the fan latch and pull the fan out by the handle (see Figure 4-2).

Figure 4-3 Fan Assembly

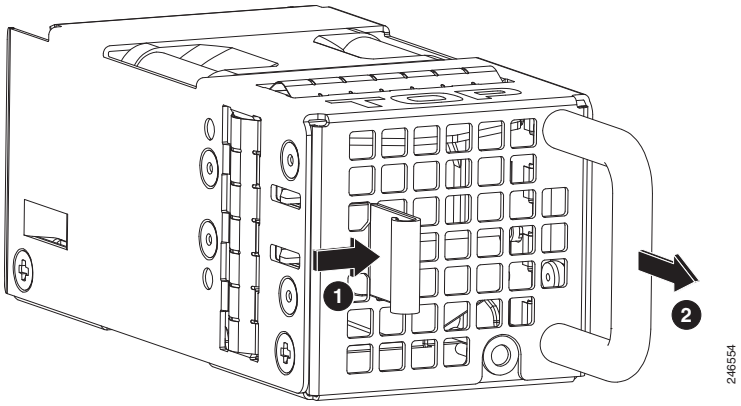

Step 3 Within one minute, insert the new fan with the surface marked "TOP" facing up and verify that the latch is engaged.

Step 4 Check the power LED to verify that the new fan is receiving power.

Note If a fan alarm occurs and you power down the WAVE appliance to replace the fan, you must use the **clear bmc event-log** global configuration command and then reboot to clear the alarm.

Replacing a Power Supply

The WAVE appliance supports two power supply assemblies that are hot-swap capable.

Power supply assemblies can only be inserted in one orientation.

Note Power supply assemblies must be inserted and can only function with the surface marked "TOP" facing up.

Caution To maintain proper system cooling, do not operate the appliance for more than 1 minute without a power supply installed in each bay.

To replace a power supply assembly, follow these steps:

Step 1 Review the information in the Safety Warnings and Cautions and Safety Guidelines sections in Chapter 2, "Preparing to Install the WAVE-7541, WAVE-7571, and WAVE-8541."

Step 2 Remove the power cord from the power supply.

Note Power supply assemblies support load-sharing. If one loses power, the second power supply takes over.

Step 3 Disengage the latch and pull the power supply out by the handle. (See Figure 4-4).

Figure 4-4 Power Supply Assembly

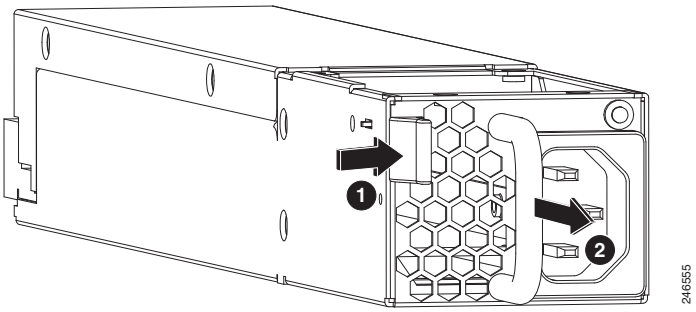

Step 4 Within one minute, insert the new power supply with the surface marked "TOP" facing up and verify that the latch is engaged.

Step 5 Insert the power cord into the replacement power supply.

Step 6 Check the power LED to verify that the new power supply is receiving power.

Note If a power supply alarm occurs and you power down the WAVE appliance to replace the power supply, you must use the **clear bmc event-log** global configuration command and then reboot to clear the alarm.