Cisco Wide Area Application Services for Isilon IQ Clustered Storage: Enable the Next-Generation Data Center

What You Will Learn

Isilon and Cisco® have joined forces to enable and validate Isilon clustered storage systems with the Cisco Wide Area Application Services (WAAS) solution. Using Isilon clustered storage systems in combination with Cisco WAAS for WAN optimization and acceleration, enterprise customers can perform data replication tasks 65 times faster while reducing bandwidth utilization by 98.4 percent.

As this document describes, this combined solution enables enterprises to accelerate application performance, consolidate server and storage resources into central management points, and significantly lower costs. By using Isilon clustered storage and Isilon SyncIQ asynchronous data replication software in combination with Cisco WAAS, customers can improve efficiency, increase business productivity, and maximize return on investment.

Cisco WAAS appliances interoperate transparently with Isilon clustered storage systems and Isilon SyncIQ asynchronous data replication software, enabling businesses to eliminate the performance bottlenecks of traditional storage and file transfer systems and achieve the following benefits:

- Eliminate data redundancy by consolidating data into a single, shared pool of Isilon clustered storage.
- Decrease WAN consumption by up to 98 percent and enable high-speed concurrent data access across multiple users and applications.
- Improve data protection by accelerating backup operations and reducing data restoration times from days to minutes, dramatically shortening windows of risk for data loss.

Isilon SyncIQ Overview

Isilon SyncIQ uses the Isilon OneFS operating system to transfer data over multiple streams between remote Isilon IQ clusters, fully utilizing the clusters' aggregate bandwidth and computing resources (Figure 1). Additionally, only changed files are transferred in subsequent replications, reducing data redundancy of the replicated copies. Isilon SyncIQ replication serves the following purposes:

- Disaster recovery: Isilon SyncIQ delivers high-performance, asynchronous replication to address a broad range of recovery point objectives (RPOs) and recovery time objectives (RTOs), enabling enterprises to make an optimal tradeoff between infrastructure cost and the potential for data loss in the event of a disaster. Isilon SyncIQ supports both LAN and WAN topologies for replication over short or long distances, providing protection against both site-specific and regional disasters.

All contents are Copyright © 1992–2008 Cisco Systems, Inc. All rights reserved. This document is Cisco Public Information.

- Disk-to-disk backup: Backups to tape are traditionally slow and hard to manage as they grow, compounded by the size and rapid growth rate of digital content and unstructured data. When combined with Isilon IQ clustered storage, Isilon SyncIQ delivers a superior disk-to-disk backup and restores solution that delivers exceptional performance and simplicity, enabling IT organizations to reduce backup and restore costs, ease complexity, and minimize risk.
- Online delivery of content: Enterprises need to deliver digital content to more people across a wider range of geographies faster than ever before. Having a solution in place that helps ensure that the right data is located in the right location is crucial to maximizing revenue opportunities and achieving a superior end-user experience. Isilon SyncIQ enables enterprises to improve bandwidth utilization, minimize costs, and increase the speed of end-user access by distributing content across multiple networks, data centers, and geographic locations.

Figure 1. Isilon SyncIQ Replication over LAN and WAN

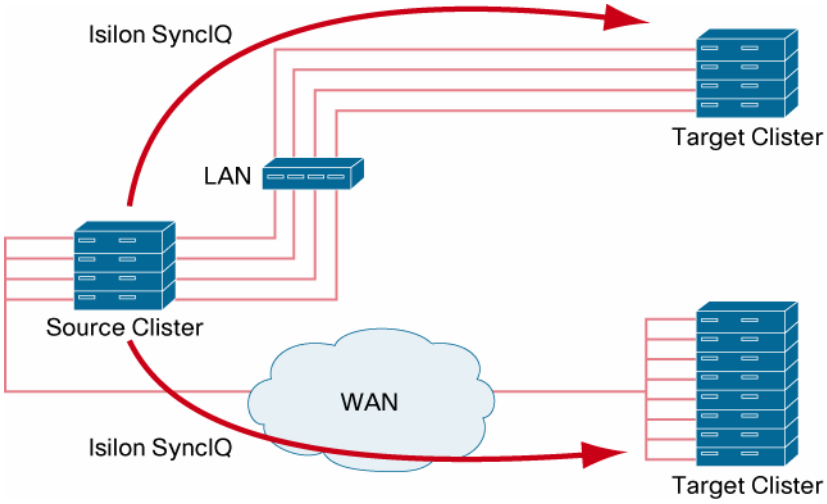

Cisco WAAS Overview

Cisco WAAS allows consolidation of distributed servers and storage and improves the performance of applications across the WAN while minimizing WAN bandwidth consumption. Cisco WAAS couples application acceleration and WAN optimization capabilities so that remote-office workers can access centralized servers, storage, and application infrastructure with LAN-like performance.

Cisco WAAS provides the foundation for improving the performance of many data replication applications and reducing the amount of time necessary to replicate data. Cisco WAAS accelerates Isilon traffic using TCP layer optimizations such as transport flow optimization (TFO), data redundancy elimination (DRE), and persistent Lempel-Ziv (LZ) compression.

Cisco WAAS Software runs on Cisco Wide Area Application Engine (WAE) Appliances.

Cisco WAE Appliances and Isilon IQ Acceleration

Cisco WAAS and Isilon IQ clusters integrate transparently into the corporate data center (Figure 2). Each Cisco WAE Appliance can be deployed between the LAN switch and Cisco Integrated Services Router. Data transfers between Isilon IQ clusters or users across the WAN are accelerated by the peer Cisco WAE Appliances. Cisco WAAS provides multiple optimizations at

All contents are Copyright © 1992–2008 Cisco Systems, Inc. All rights reserved. This document is Cisco Public Information.

the TCP layer that can accelerate any TCP-based application such as HTTP and FTP. One of the primary optimizations is the DRE mechanism, which exploits the commonality in TCP data payloads and thus reduces the amount of data sent across the WAN, saving bandwidth costs and reducing the amount of time required to replicate data.

In addition to the acceleration offered by Cisco WAAS, Isilon IQ replication transfers are accelerated by elimination of the transmission of unchanged files across sequential replication copies and by parallelization of replication jobs between multiple transfer streams.

Figure 2. Multi-site Deployment of Isilon IQ and Cisco WAAS with Cisco WAE Appliances

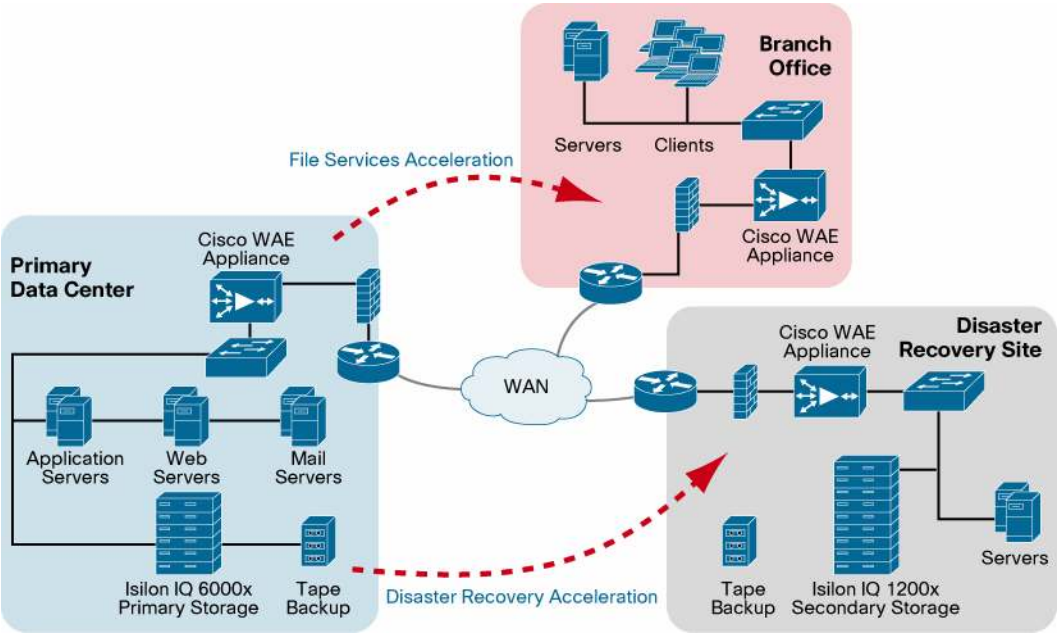

The joint solution of Cisco WAAS with Isilon IQ clustered storage delivers the following benefits:

- Eliminates data redundancy resulting from storage of multiple copies of data in disparate storage pools
- Decreases WAN consumption by up to 98 percent, allowing higher levels of concurrent access and parallel workflows
- Improves data protection by shortening backup timeframes and increasing the frequency of disk-based backup operations
- Reduces backup restoration times from days to minutes
- Reduces storage management overhead by consolidating storage pools and extending storage access to remote offices
- Accelerates and enables application workflow across WANs

To illustrate the efficiency gains experienced when using Isilon SyncIQ with Cisco WAE Appliances, Isilon Systems conducted a series of lab experiments running Isilon SyncIQ replications between two remote sites over a WAN. In this environment, a 5-node Isilon IQ 3000 cluster was deployed as a primary cluster connected to LAN 1, replicating data to a 10-node Isilon IQ 6000 secondary cluster connected to LAN 2. The replication was accomplished over a T1 link with 1.5 Mbps bandwidth, 80 milliseconds (ms) of latency, and 0.1 packet loss conditions.

All contents are Copyright © 1992–2008 Cisco Systems, Inc. All rights reserved. This document is Cisco Public Information.

To test the network latency across the WAN, the ping command was used from one cluster to the other. The recorded roundtrip time (RTT) was 80 ms. The Cisco WAE Appliances on both sides were connected in inline mode between the switch and the router as shown in Figure 3. The Cisco WAE Appliances were also each configured with an IP address on the management port. The management port is used for communication with the Cisco WAAS Central Manager. After deployment, the Cisco WAE Appliances optimize traffic on newly established TCP-based connections.

The Cisco WAE Appliances can be managed centrally using the Cisco WAAS Central Manager. The Cisco WAAS Central Manager is also a repository for statistics, and its GUI can be used to monitor application performance centrally.

Figure 3. Isilon SyncIQ Replication over a T1 Link with Cisco WAAS

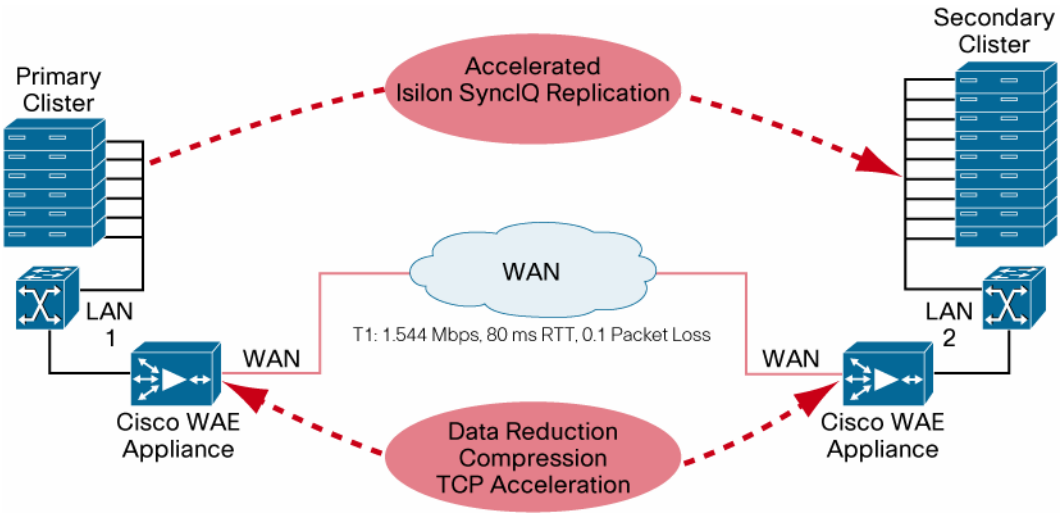

Figure 4 summarizes a series of Isilon SyncIQ replication jobs conducted with the T1 network link conditions. The data set consisted of 16 GB of mixed data of compressible and non-compressible content to demonstrate typical performance results.

Figure 4. Performance Improvements for Isilon SyncIQ over Cisco WAAS

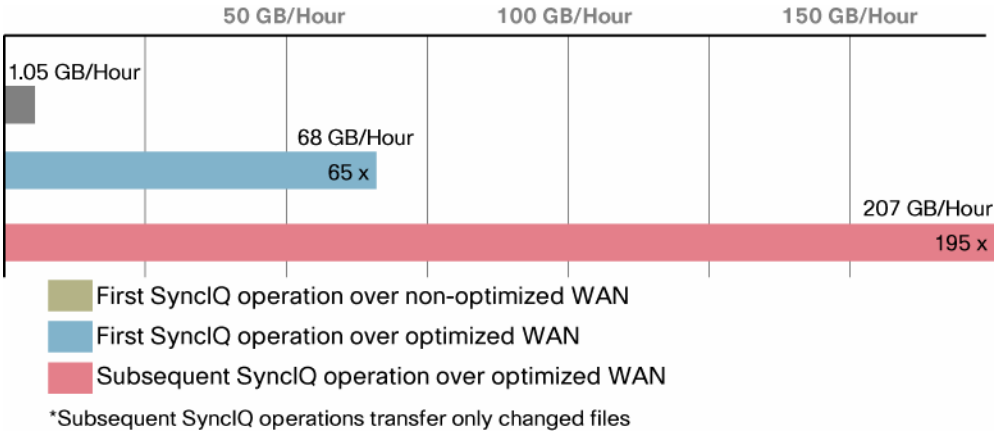

Conclusion

Combining the scalability of Isilon IQ clustered storage with Cisco WAAS technology provides the means to maintain an always-on architecture, whether by replicating data to additional storage

All contents are Copyright © 1992–2008 Cisco Systems, Inc. All rights reserved. This document is Cisco Public Information.

clusters for data protection or by giving remote users access to consolidated storage resources. The combined solution enables enterprises to accelerate application performance, consolidate server and storage resources into central management points, and significantly lower costs. By using Isilon IQ clustered storage and Isilon SyncIQ asynchronous data replication software in combination with Cisco WAAS, enterprises can transform their data centers into next-generation, virtual environments to improve efficiency, increase business productivity, and maximize their return on investment (ROI).

For More Information

Isilon Systems is the worldwide leader in clustered storage systems and software for digital content and unstructured data, enabling enterprises to transform data into information—and information into breakthroughs. The award-winning Isilon family of IQ clustered storage systems combines Isilon OneFS operating system software with the latest advances in industry-standard hardware to deliver modular, pay-as-you-grow, enterprise-class storage systems. Isilon clustered storage solutions speed access to critical business information while dramatically reducing the cost and complexity of storing it. For more information about Isilon, visit http://www.isilon.com.

Cisco is the worldwide leader in networking that transforms the way that people connect, communicate, and collaborate. For more information about Cisco, visit http://www.cisco.com.

Americas Headquarters
Cisco Systems, Inc.
San Jose, CA

Asia Pacific Headquarters
Cisco Systems (USA) Pte. Ltd.
Singapore

Europe Headquarters
Cisco Systems International BV
Amsterdam, The Netherlands

Cisco has more than 200 offices worldwide. Addresses, phone numbers, and fax numbers are listed on the Cisco Website at www.cisco.com/go/offices.

CCDE, CCVP, Cisco Eos, Cisco StadiumVision, the Cisco logo, DOE, and Welcome to the Human Network are trademarks; Changing the Way We Work, Live, Play, and Learn is a service mark; and Access Registrar, Aironet, AsyncOS, Bringing the Meeting To You, Catalyst, CCDA, CCDP, CCIE, CCIP, CCNA, CCNP, CCSP, Cisco, the Cisco Certified Internetwork Expert logo, Cisco IOS, Cisco Press, Cisco Systems, Cisco Systems Capital, the Cisco Systems logo, Cisco Unity, Collaboration Without Limitation, Enterprise/Solver, EtherChannel, EtherFast, EtherSwitch, Event Center, Fast Step, Follow Me Browsing, FormShare, GigaDrive, HomeLink, Internet Quotient, IOS, iPhone, IP/TV, iQ Expertise, the iQ logo, iQ Net Readiness Scorecard, iQuick Study, IronPort, the IronPort logo, LightStream, Linksys, MediaTone, MeetingPlace, MGX, Networkers, Networking Academy, Network Registrar, PCNow, PIX, PowerPanels, ProConnect, ScriptShare, SenderBase, SMARTnet, Spectrum Expert, StackWise, The Fastest Way to Increase Your Internet Quotient, TransPath, WebEx, and the WebEx logo are registered trademarks of Cisco Systems, Inc. and/or its affiliates in the United States and certain other countries.

All other trademarks mentioned in this document or Website are the property of their respective owners. The use of the word partner does not imply a partnership relationship between Cisco and any other company. (0801R)

Printed in USA C11-454581-00 02/08

All contents are Copyright © 1992–2008 Cisco Systems, Inc. All rights reserved. This document is Cisco Public Information.