# Packet Voice Solution for 2G/3G Mobile Wireless

Cisco.com

## Introduction of Cisco's Mobile Packet Voice Solution for CDMA2000 and UMTS

**hosung Jung**
**hsjung@cisco.com**
**Technical Marketing Engineer**
**Mobile Wireless Group**

© 2002, Cisco Systems, Inc. All rights reserved.



## Agenda

Cisco.com

- **CDMA Architecture Solution**
  - Current Voice Model and Transit Solution
  - 3G ALL IP Network Architecture Solution
  - Multimedia QoS Issues
- **UMTS R4/R5 Architecture Solution**
  - UMTS R4 Standard Architecture and Solution
  - UMTS R5 Standard Architecture and Solution
- **Cisco's Contribution on Mobile Standard**
  - 3GPP / 3GPP2 / MWIF
- **Possible Migration Scenario**
  - IMT Trunking / Transit / Gateway MSC / Serving MSC
- **Solution Products**

© 2002, Cisco Systems, Inc. All rights reserved.



Copyright © 2001, Cisco Systems, Inc. All rights reserved. Printed in USA.
Presentation_ID.scr

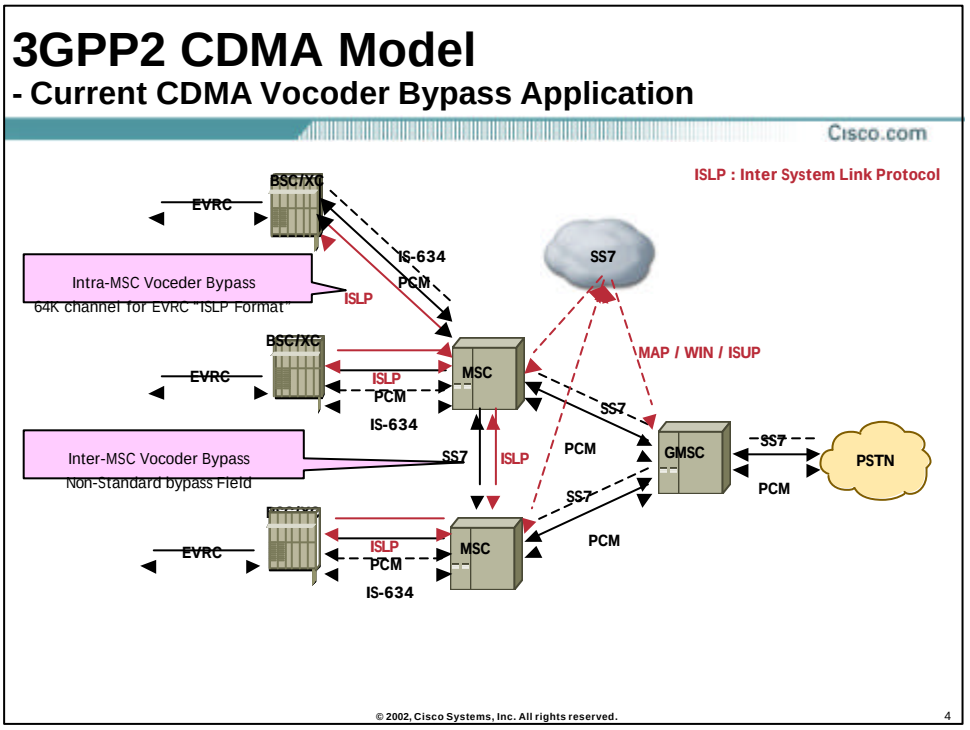


Copyright © 2001, Cisco Systems, Inc. All rights reserved. Printed in USA.

# 3GPP2 CDMA Model

## - Phase 1 Transit Model : T/GMSC Solution

Cisco.com

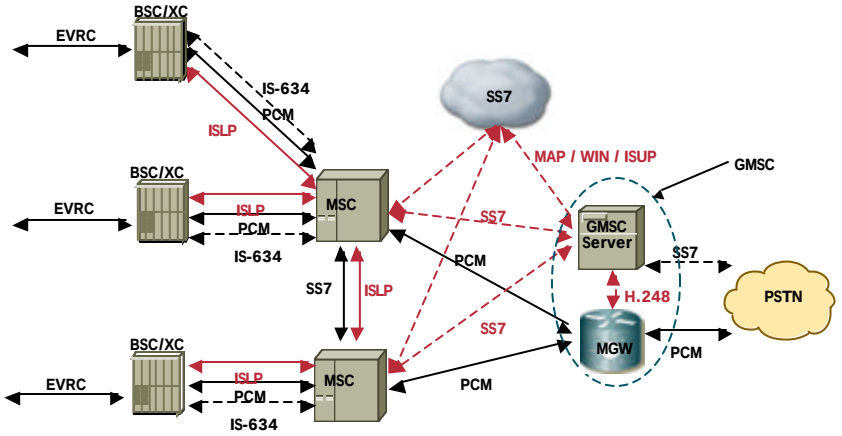


© 2002, Cisco Systems, Inc. All rights reserved.


# 3GPP2 CDMA Model

## - Phase 2 Transit Model : Serving MSC Solution

Cisco.com

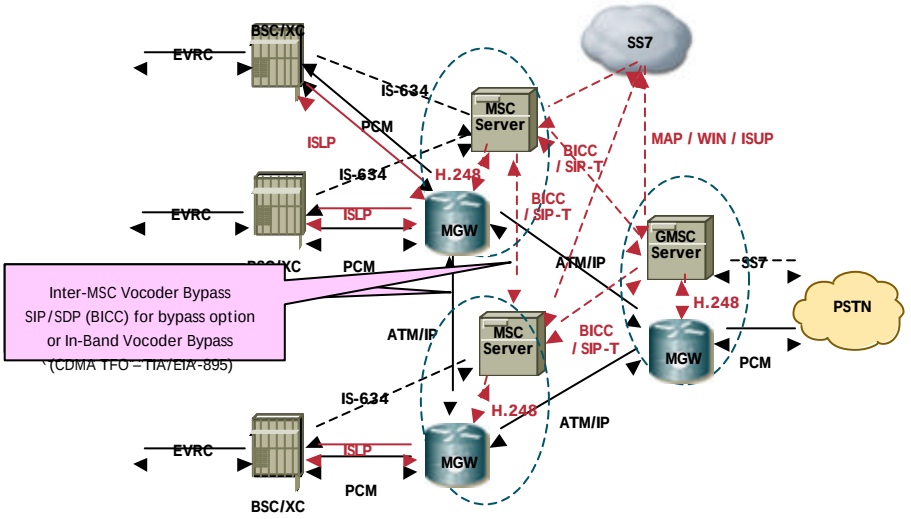


© 2002, Cisco Systems, Inc. All rights reserved.


Copyright © 2001, Cisco Systems, Inc. All rights reserved. Printed in USA.
Presentation_ID.scr

# Call Processing Scheme (example)

## - IS-95 Mobile Origination (by Serving-MSC) “M-to-L”

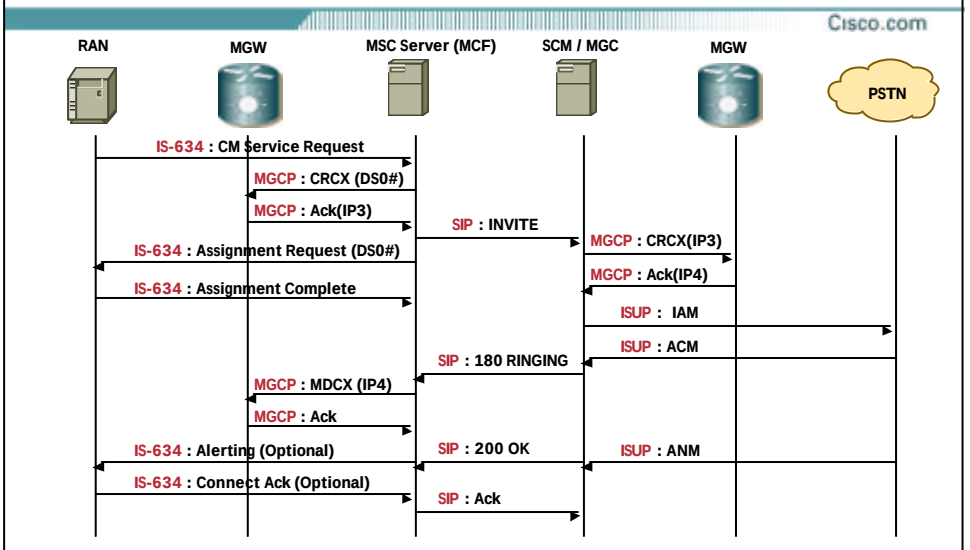


© 2002, Cisco Systems, Inc. All rights reserved.


# Call Processing Scheme (example)

## - IS-95 Mobile Termination (by Serving-MSC) “L-to-M”

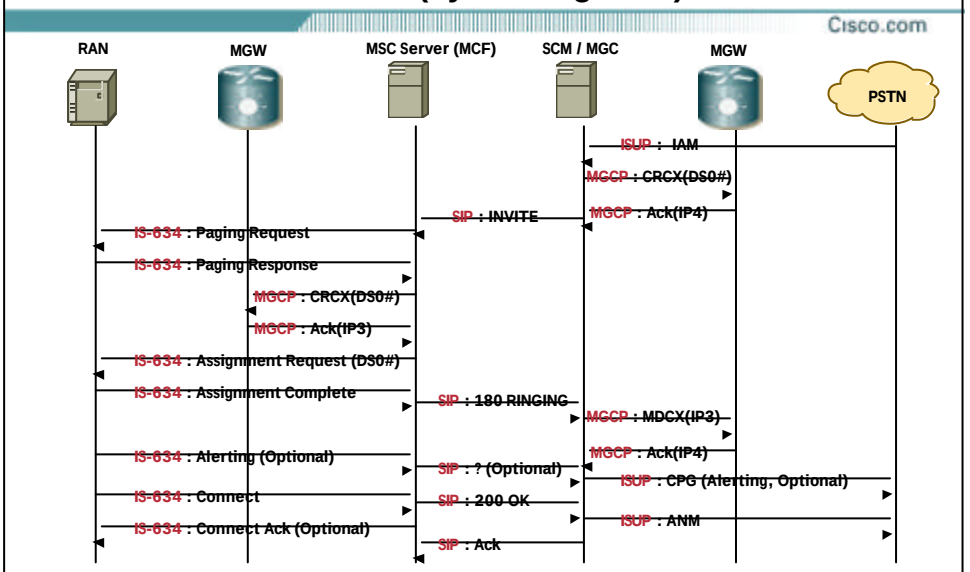


© 2002, Cisco Systems, Inc. All rights reserved.


Copyright © 2001, Cisco Systems, Inc. All rights reserved. Printed in USA.
Presentation_ID.scr

# Principle of Tandem Free Operation

## - 3GPP2 Tandem Free Operation Specification

Cisco.com

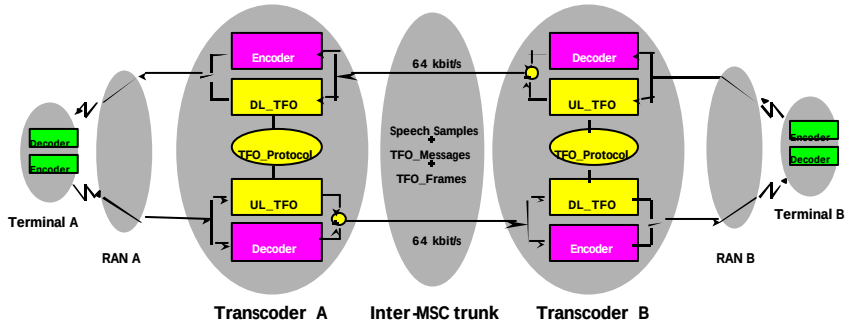


- Improved Voice Quality (by Single Vocoding / Reduce Delay )
- TFO end-points in transcoders (TRAU, MSC or MGW)
- TFO uses in-band signalling protocol
- Trunk carries 64kbps per channel, of which 8 or 16kbps are compressed voice

© 2002, Cisco Systems, Inc. All rights reserved.


# Cisco Support for TFO

## - TFO is supported (transparent) on AAL1/CES or VoAAL2

Cisco.com

- ALL ATM equipment supporint AAL1 CES (e.q MGX CESM)
- MGX VISM configured for VoAAL2 trunking at 64Kbps

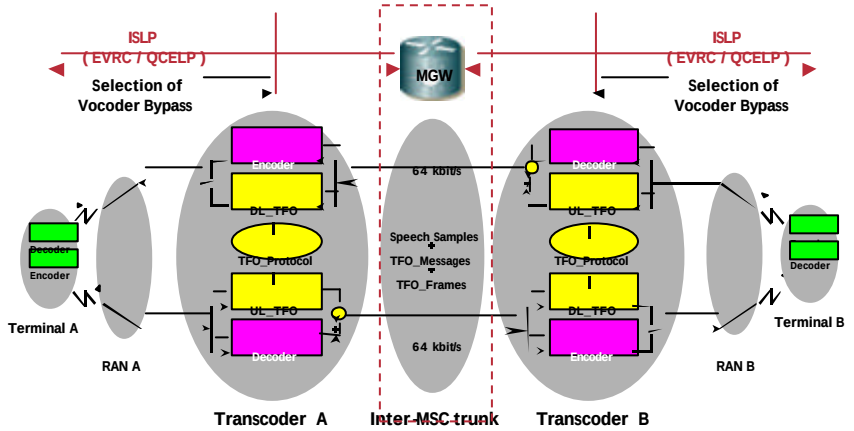


© 2002, Cisco Systems, Inc. All rights reserved.


Copyright © 2001, Cisco Systems, Inc. All rights reserved. Printed in USA.
Presentation_ID.scr

# 3GPP2 All IP Architecture

## - All IP NAM Rev 1.1.1 (8.2001)

Cisco.com

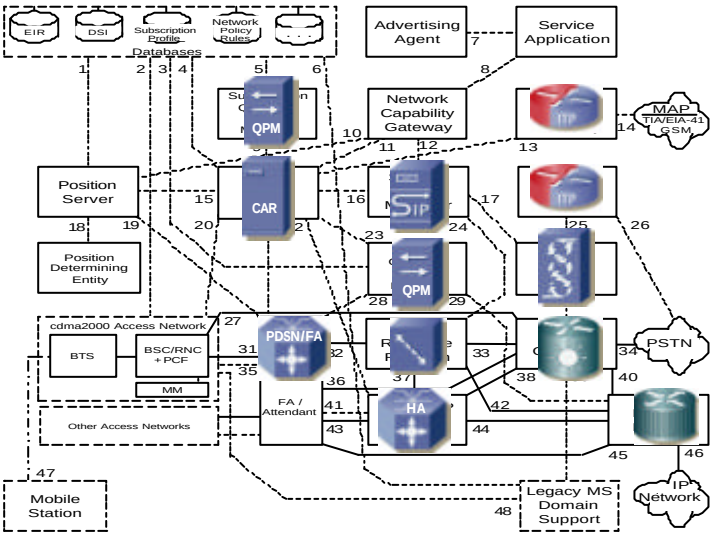


© 2002, Cisco Systems, Inc. All rights reserved.


Copyright © 2001, Cisco Systems, Inc. All rights reserved. Printed in USA.
Presentation_ID.scr

# 3GPP2 All IP Architecture

## - Proposed RAN / CN Configuration (ATM RAN)

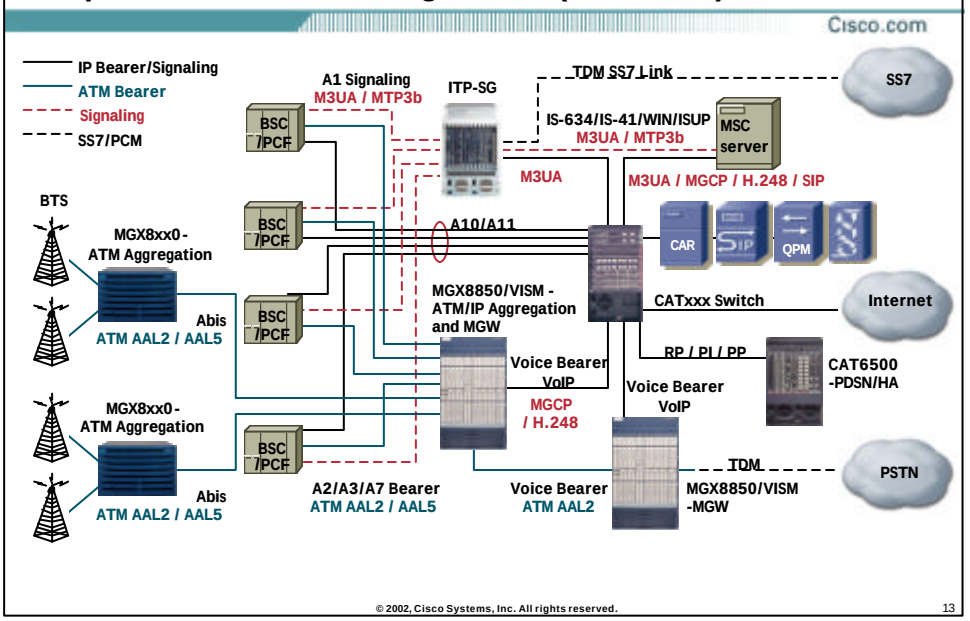

Copyright © 2001, Cisco Systems, Inc. All rights reserved. Printed in USA.
Presentation_ID.scr

# HC for VoIP in CDMA2000

## - End-to-End VoIP MS Model Architecture

Cisco.com

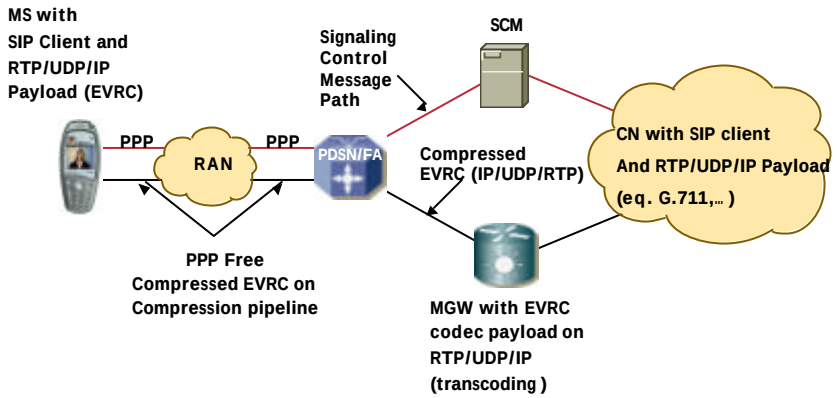


Source : Header compression for Voice-over-IP in CDMA2000 Rev. 0.3 , montreal , 2001

© 2002, Cisco Systems, Inc. All rights reserved.



# HC for VoIP in CDMA2000

## - End-to-End VoIP MS Model Protocol Stack

Cisco.com

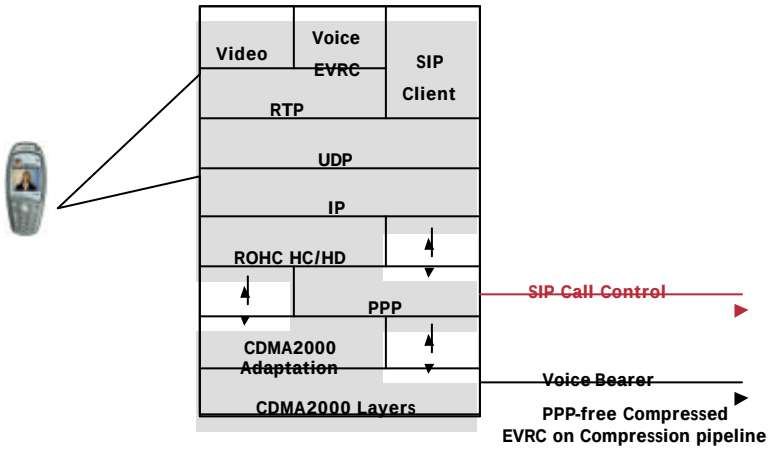


Source : Header compression for Voice-over-IP in CDMA2000 Rev. 0.3 , montreal , 2001

© 2002, Cisco Systems, Inc. All rights reserved.



Copyright © 2001, Cisco Systems, Inc. All rights reserved. Printed in USA.
Presentation_ID.scr

# HC for VoIP in CDMA2000

## - Hybrid VoIP MS Model Architecture

Cisco.com

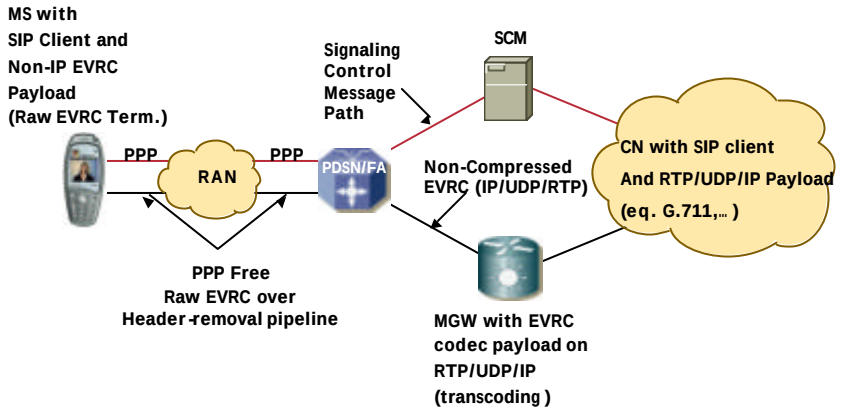


Source : Header compression for Voice-over-IP in CDMA2000 Rev. 0.3 , montreal , 2001

© 2002, Cisco Systems, Inc. All rights reserved.



# HC for VoIP in CDMA2000

## - Hybrid VoIP MS Model Protocol Stack

Cisco.com

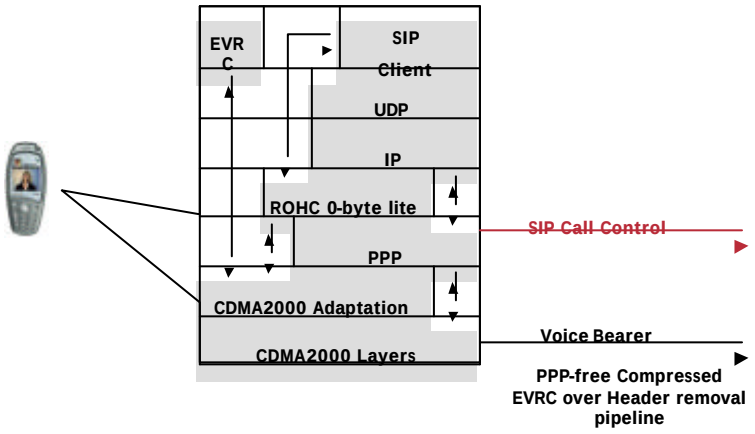


Source : Header compression for Voice-over-IP in CDMA2000 Rev. 0.3 , montreal , 2001

© 2002, Cisco Systems, Inc. All rights reserved.



Copyright © 2001, Cisco Systems, Inc. All rights reserved. Printed in USA.
Presentation_ID.scr

# QoS Framework for CDMA2000

## - Mapping of Traffic Classes to S.I Type

Cisco.com

| Traffic Class | S.I Type | Priority | H.C | Appplication |
|---|---|---|---|---|
| Background | Primary [S.I Type 1] | Very Low | VJ RFC2507 | FTP, Email,Streaming, bulk downloads |
| Interactive | Primary [S.I Type 1] | Low | VJ RFC2507 | Web browsing, Instant messaging, news, telnet, SSH |
| Streaming | Secondary [S.I Type 3] | High | ROHC | Streaming audio and video |
| | Secondary [S.I Type 1] | High | ROHC RFC2508 | Streaming audio and video |
| Conversational | Secondary [S.I Type 2] | Very High | LLA ROHC Header Striping / Generation | EVRC VoIP (for end-to-end VoIP MS and Hybrid VoIP MS) |
| | Secondary [S.I Type 3] | Very High | ROHC RFC2508 | Interactive voice and video |

- SI-TYPE _1 : identifies a primary service instance for re-transmitting RLP that carries PPP traffic that is delay insensitive but error sensitive.
- SI-TYPE _2 : identifies a secondary/auxilliary service instance with no RLP framing that serves to carry cdma2000 voice codecs that are synchronous with the cdma2000 air framing.
- SI-TYPE _3 : identifies a secondary/auxilliary service instance for non re-transmitting RLP that carries PPP traffics that is delay sensitive but error insensitive,and is asynchronous with the cdma2000 air framing.

Source : PR002 QoS Report – Concept,Architecture and mechanisms (Release C3) , Kyoto, Sep. 2001

© 2002, Cisco Systems, Inc. All rights reserved.


# QoS Framework for CDMA2000

## - Edge-to-Edge (MS-PDSN) and PPP Link Layer QoS Signaling

Cisco.com

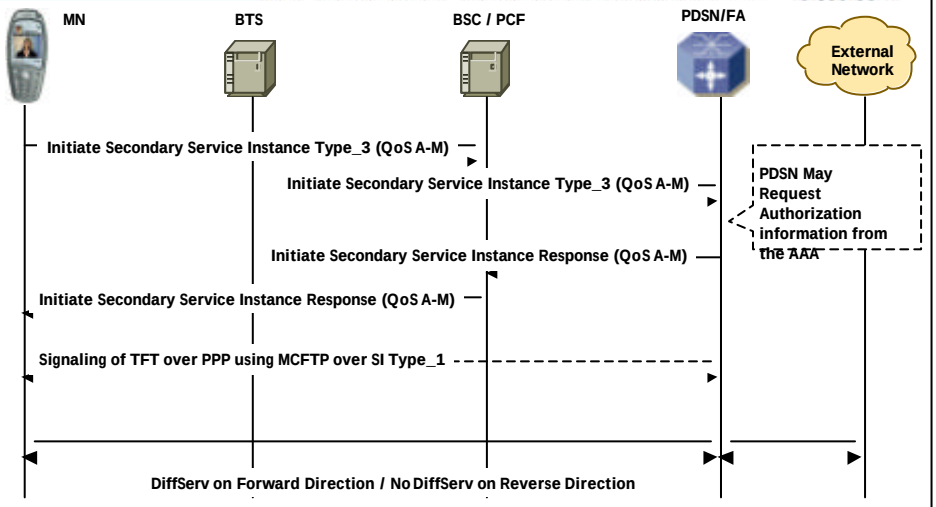


Source : PR002 QoS Report – Concept,Architecture and mechanisms (Release C3) , Kyoto, Sep. 2001

© 2002, Cisco Systems, Inc. All rights reserved.


Copyright © 2001, Cisco Systems, Inc. All rights reserved. Printed in USA.
Presentation_ID.scr

# QoS Framework for CDMA2000

## - Single PPP over multiple A8-A10 connections

Cisco.com

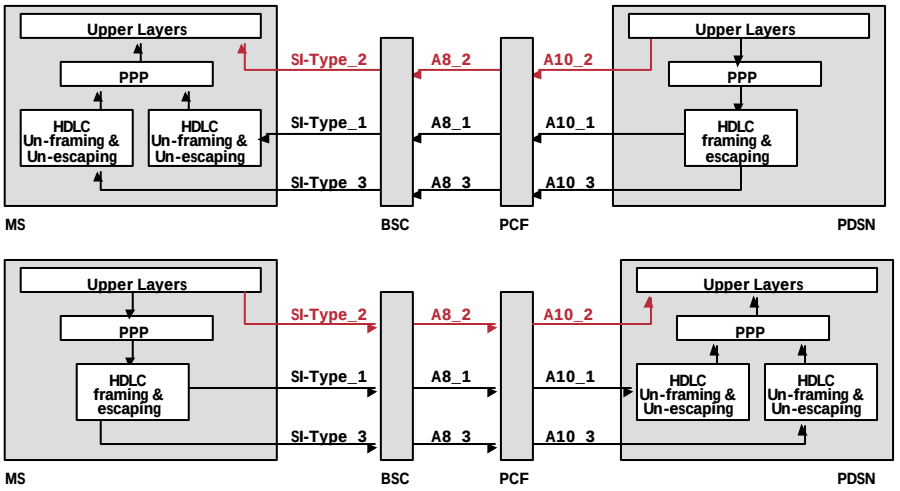


Source : PR002 QoS Report – Concept,Architecture and mechanisms (Release C3) , Kyoto, Sep. 2001

© 2002, Cisco Systems, Inc. All rights reserved.

Copyright © 2001, Cisco Systems, Inc. All rights reserved. Printed in USA.
Presentation_ID.scr

# 3GPP UMTS R4 Architecture

## - M3UA/MTP3b Signaling Requirement

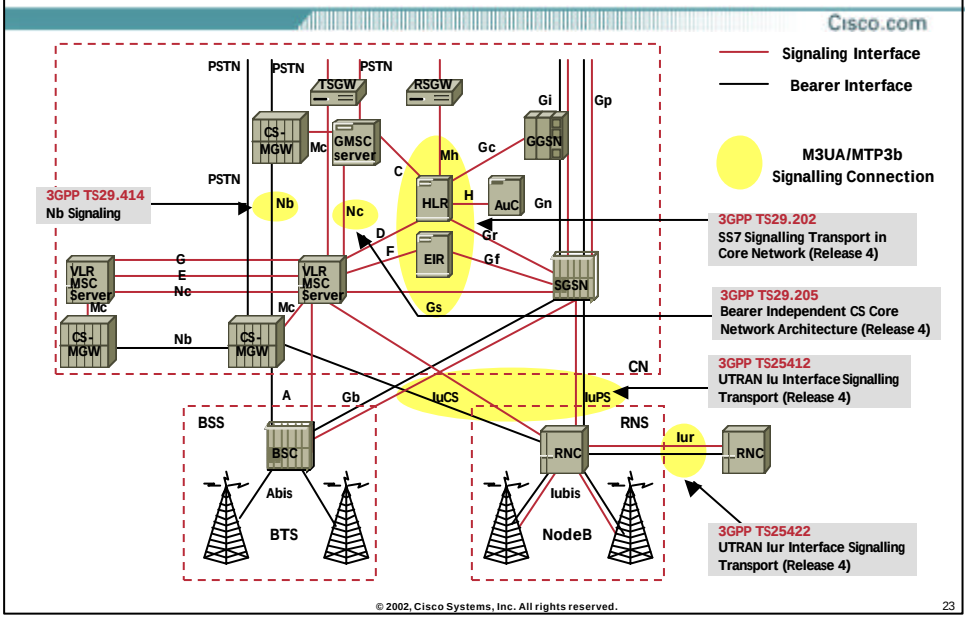


© 2002, Cisco Systems, Inc. All rights reserved.


# 3GPP UMTS R4 Architecture

## - Voice/Data Bearer Requirement

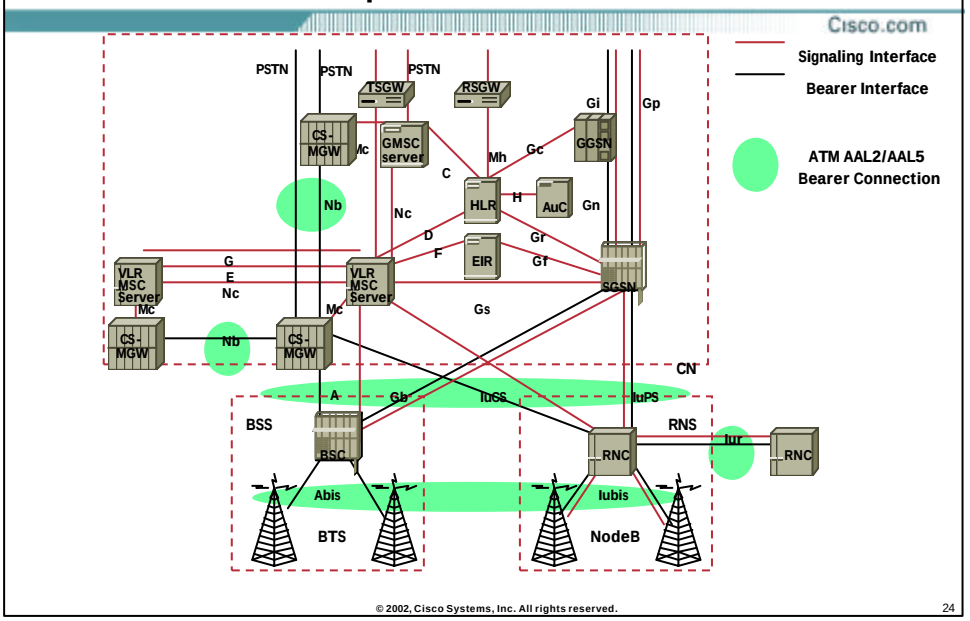


© 2002, Cisco Systems, Inc. All rights reserved.


Copyright © 2001, Cisco Systems, Inc. All rights reserved. Printed in USA.
Presentation_ID.scr

# 3GPP UMTS R4 Architecture

## - 3G TS23.002-430 Architecture .vs Cisco's Solution

Cisco.com

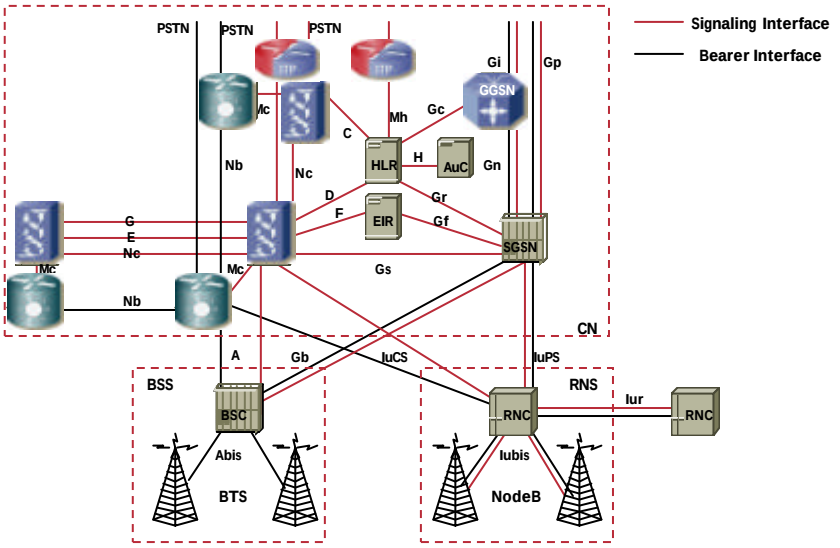


© 2002, Cisco Systems, Inc. All rights reserved.


# 3GPP UMTS R4 Architecture

## - Proposed RAN / CN Configuration (ATM RAN)

Cisco.com

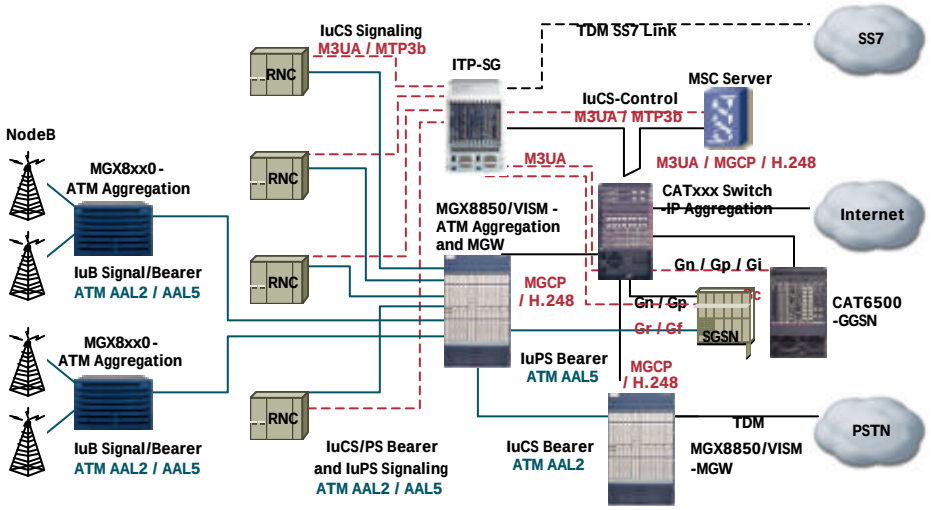


© 2002, Cisco Systems, Inc. All rights reserved.


Copyright © 2001, Cisco Systems, Inc. All rights reserved. Printed in USA.
Presentation_ID.scr

# 3GPP UMTS R4 Architecture

## - UMTS R4 CN Deployment : example for VoATM

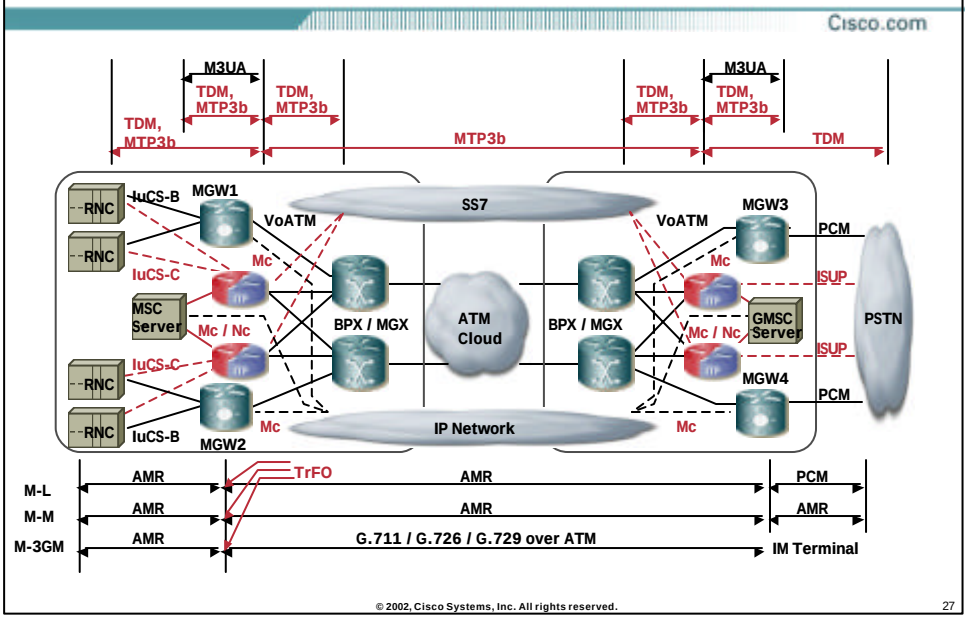


© 2002, Cisco Systems, Inc. All rights reserved. 27

# 3GPP UMTS R4 Architecture

## - UMTS R4 CN Deployment : example for VoIP

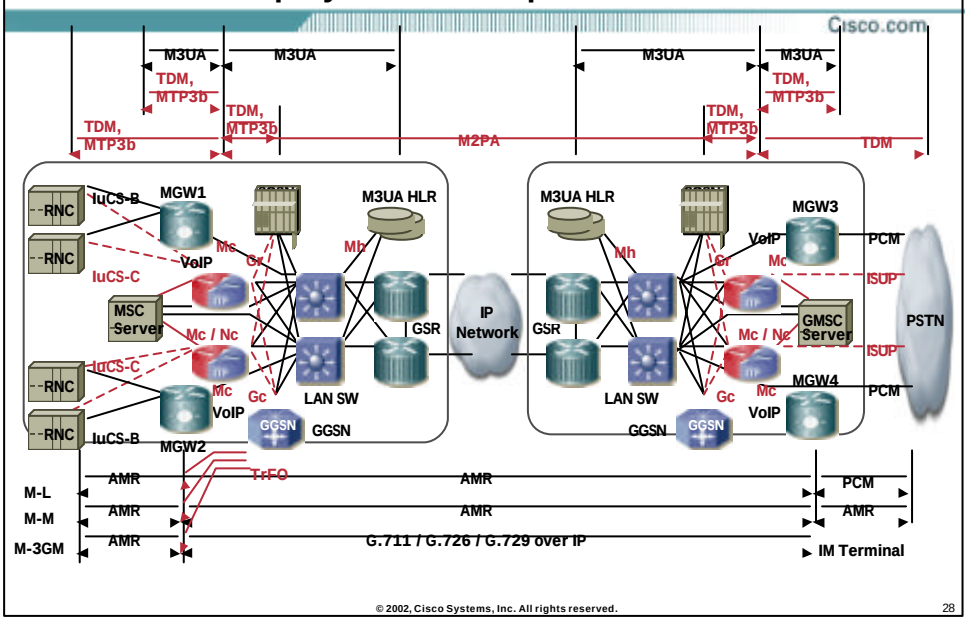


© 2002, Cisco Systems, Inc. All rights reserved. 28

Copyright © 2001, Cisco Systems, Inc. All rights reserved. Printed in USA.
Presentation_ID.scr

# UMTS R4/R5 Architecture Solution

UMTS R4 Standard Architecture and Solution

UMTS R5 Standard Architecture and Solution

# 3GPP UMTS R5 Architecture

## - TS23.002-540 Architecture .vs Cisco's Solution

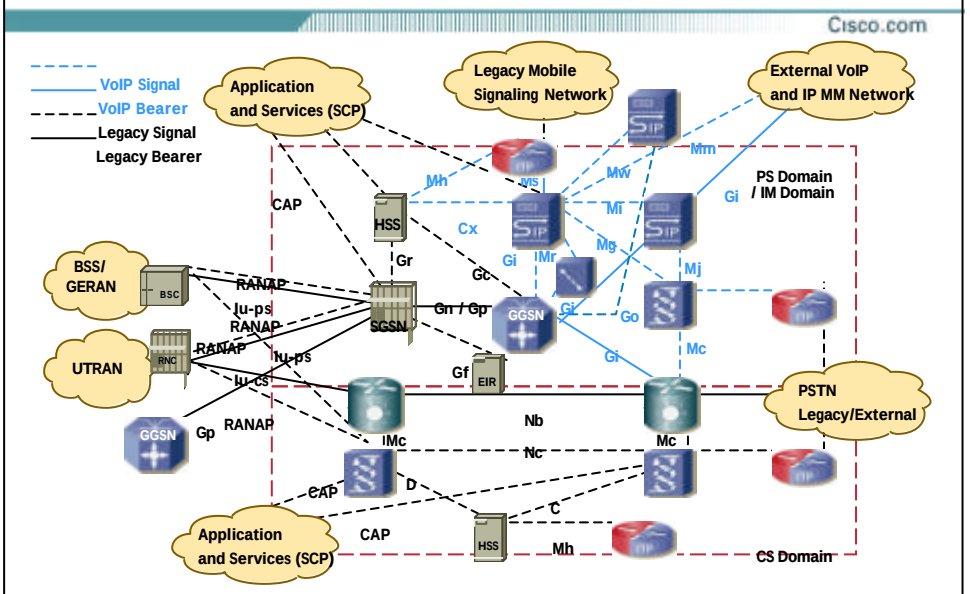


Copyright © 2001, Cisco Systems, Inc. All rights reserved. Printed in USA.
Presentation_ID.scr

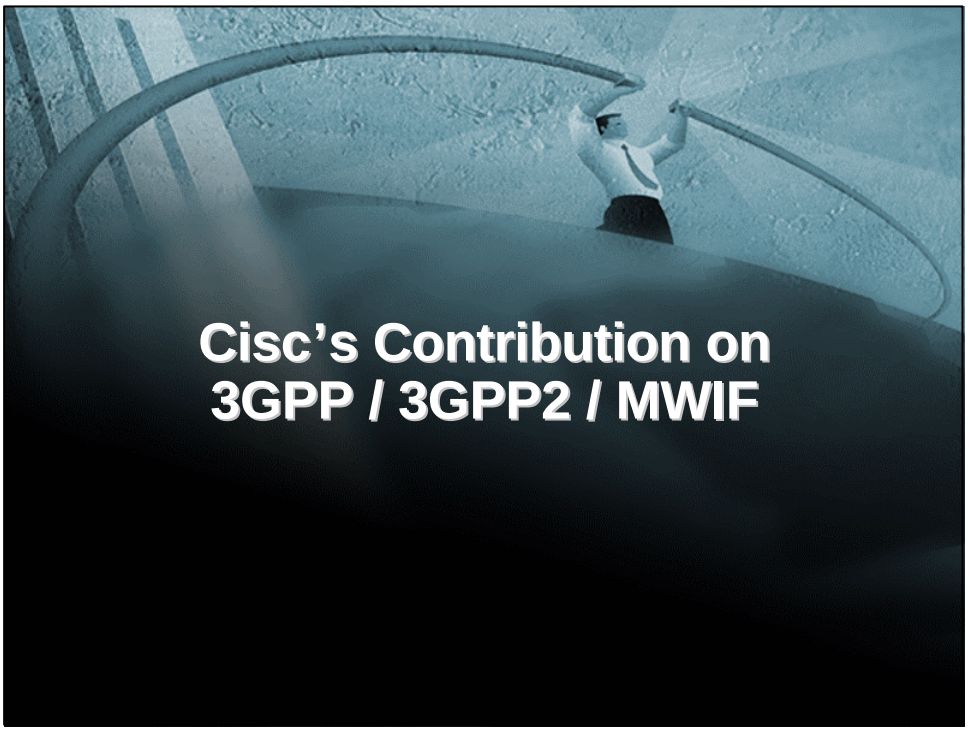


# Cisco's Contribution on Mobile Standard
## - 3GPP2

Cisco.com

- **TSG-A**
  - WG A : IP Transport
  - WG B : IP Abis
  - WG C : RAN QoS, Micro Mobility, Security [Co-Chair]
  - All-IP Ad Hoc : All-IP Network Architecture [Chair]
- **TSG-P**
  - Fast Handoff
  - QoS and Header Compression

© 2002, Cisco Systems, Inc. All rights reserved.


Copyright © 2001, Cisco Systems, Inc. All rights reserved. Printed in USA.
Presentation_ID.scr

# Cisco's Contribution on Mobile Standard
## - 3GPP

Cisco.com

- **TSG-CN**
  - CN1 : MM/CC/SM , Iu
  - CN4 : GTP/MAP
- **TSG-RAN**
  - RAN3 : IP UTRAN Transport ( Iub/Iur , IuCS/PS Transport )
  - IP Open RAN – UTRAN Evolution
- **TSG-SA**
  - SA2 : Architecture
  - SA2 : Ad Hocs ( Split architecuture, Push , SIP , QoS )

© 2002, Cisco Systems, Inc. All rights reserved.


# Cisco's Contribution on Mobile Standard
## - MWIF

Cisco.com

- **WG2 – Core Architecture**
- **WG4 – IP RAN [Chair]**
  - Open RAN Architecture
  - IP as Transport
  - RAN Micromobility
  - RAN Security
  - QoS
- **WG6 – Influencing 3GPP**
- **WG7 – Influencing 3GPP2**
- **WG8 - Influencing IETF**
- **WG9 – IP Applications [Chair]**

© 2002, Cisco Systems, Inc. All rights reserved.


Copyright © 2001, Cisco Systems, Inc. All rights reserved. Printed in USA.
Presentation_ID.scr

# Inter-MSC Trunking Solution

## - VoAAL2 Point-to-Point

Cisco.com

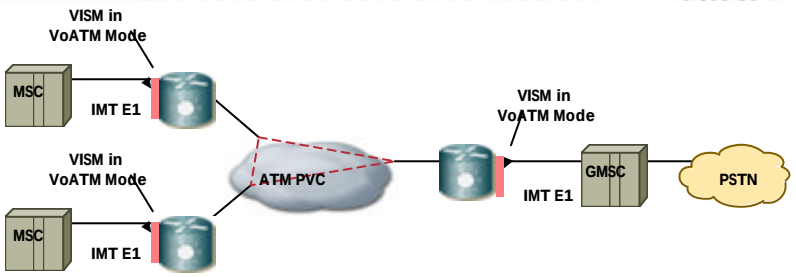


- Uses new or existing ATM Network (no IP routing required)
- Uses sophisticated ATM QoS (✍ Safe Entry to Packet Telephony)
- VISM in VoATM Mode (Only Gateway on the Market with universal HW for VoATM and VoIP ✍ Full Investment Protection)
- 1 ATM PVC for up to 248 Voice Connections (✍ easy Provisioning)
- G.729 + VAD + AAL2 Subcell-Muxing (✍ BW per Voice Call as low as 6 kbps at Toll Quality)

© 2002, Cisco Systems, Inc. All rights reserved.


Copyright © 2001, Cisco Systems, Inc. All rights reserved. Printed in USA.
Presentation_ID.scr

# Inter-MSC Trunking Solution

## - VoIP Point-to-Point

Cisco.com

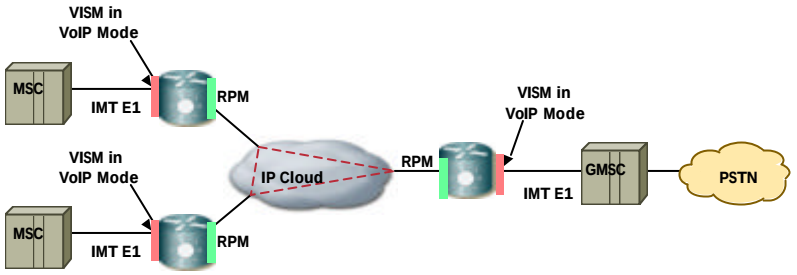


- VISM in VoIP Mode (Simple SW Re-Config to upgrade from VoATM)
- End points have fixed IP address (no Call Agent involved)
- Uses
  - IP+ATM Network (MPLS-enabled ATM core) or
  - IP MPLS core (Frame/Router-based MPLS)
- Only Additional HW in 8850 is RPM (Optional – not required if external Router is available)
- Uses advanced MPLS QoS (Traffic Engineering, Guaranteed BW)
- G.729 + VAD (Low BW per Voice Call at Toll Quality)

© 2002, Cisco Systems, Inc. All rights reserved.


# Transit MSC Solution

## - VoAAL2 Switched/SVC

Cisco.com

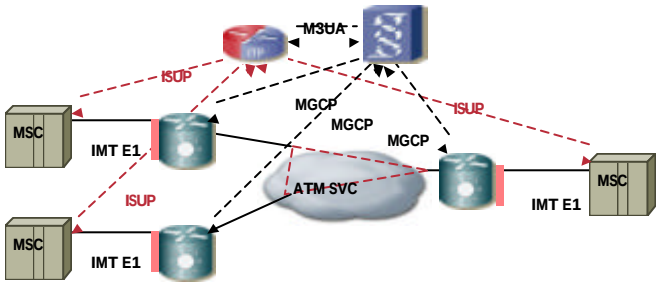


- Uses Switched Voice over ATM SVCs (controlled by Call Agent no ATM PVC provisioning)
- No Additional HW in MGX
- Uses new or existing ATM Network (no IP routing required)
- Uses sophisticated ATM QoS (Safe Entry to Packet Telephony)
- VISM in VoATM Mode (Only Gateway on the Market with universal HW for VoATM and VoIP Full Investment Protection)
- G.729 + VAD (Low BW per Voice Call at Toll Quality)
- SGW provides SS7 Signaling over IP for Softswitch

© 2002, Cisco Systems, Inc. All rights reserved.


Copyright © 2001, Cisco Systems, Inc. All rights reserved. Printed in USA.
Presentation_ID.scr

# Transit MSC Solution
## - VoIP Switching

Cisco.com

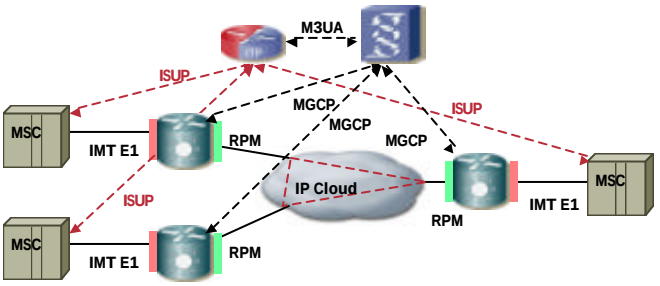


- VISM in VoIP Mode with Call Agent control (Simple SW Re-Config to upgrade from VoATM)
- Uses
  - IP+ATM Network (MPLS-enabled ATM core) or
  - IP MPLS core (Frame/Router-based MPLS ✍ Full Transition to IP Core!)
- Only Additional HW in 8850 is RPM (Optional – not required if external Router is available)
- Uses advanced IP+MPLS QoS (✍ Traffic Engineering, Guaranteed BW)
- G.729 + VAD (✍ Low BW per Voice Call at Toll Quality)
- SGW provides SS7 Signaling over IP for Softswitch

© 2002, Cisco Systems, Inc. All rights reserved.


# Transit and GW MSC Solution
## - VoAAL2 Switched/SVC

Cisco.com

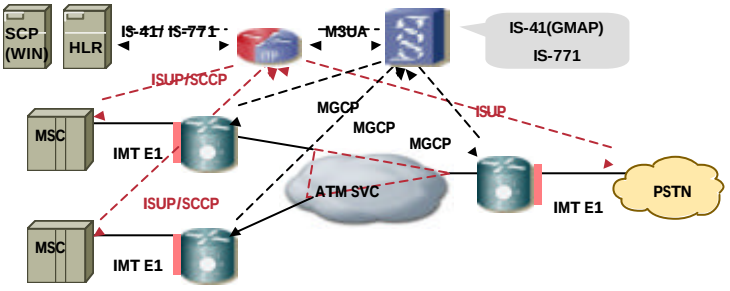


- Uses Switched Voice over ATM SVCs (controlled by Call Agent ✍ no ATM PVC provisioning)
- No Additional HW in MGX
- Uses new or existing ATM Network (no IP routing required)
- Uses sophisticated ATM QoS (✍ Safe Entry to Packet Telephony)
- VISM in VoATM Mode (Only Gateway on the Market with universal HW for VoATM and VoIP ✍ Full Investment Protection)
- G.729 + VAD (✍ Low BW per Voice Call at Toll Quality)
- Support Land-to-Mobile Call
- SGW provides SS7 Signaling over IP for Softswitch

© 2002, Cisco Systems, Inc. All rights reserved.


Copyright © 2001, Cisco Systems, Inc. All rights reserved. Printed in USA.
Presentation_ID.scr

# Transit and GW MSC Solution

## - VoIP Switching

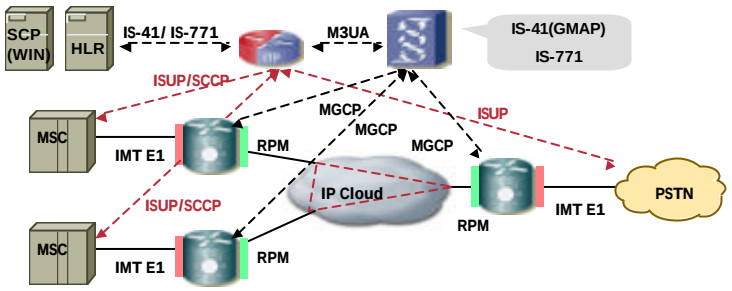


- VISM in VoIP Mode with Call Agent control (Simple SW Re-Config to upgrade from VoATM)
- Uses
  - IP+ATM Network (MPLS-enabled ATM core) or
  - IP MPLS core (Frame/Router-based MPLS ✍ Full Transition to IP Core!)
- Only Additional HW in 8850 is RPM (Optional – not required if external Router is available)
- Uses advanced IP+MPLS QoS (✍ Traffic Engineering, Guaranteed BW)
- G.729 + VAD (✍ Low BW per Voice Call at Toll Quality)
- Support Land-to-Mobile Call

© 2002, Cisco Systems, Inc. All rights reserved.


# Serving MSC Solution

## - VoAAL2 Switched/SVC

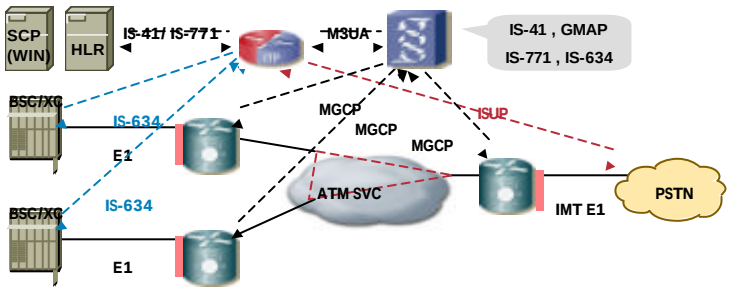


- Same as "Transit and GW MSC Solution - VoAAL2/Switched SVC"
- Support IS-634 for BSS control

© 2002, Cisco Systems, Inc. All rights reserved.


Copyright © 2001, Cisco Systems, Inc. All rights reserved. Printed in USA.
Presentation_ID.scr

# Serving MSC Solution
## - VoIP Switching

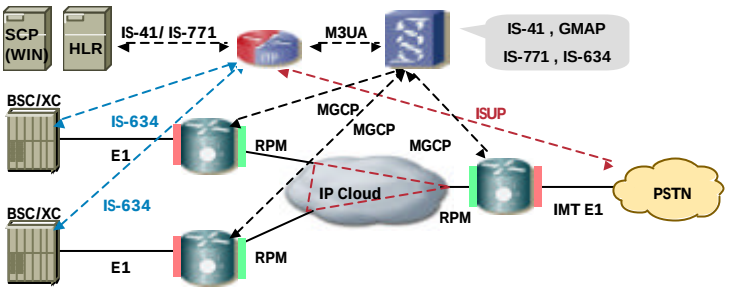


- Same as "Transit and GW MSC Solution – VoIP Switching"
- Support IS-634 for BSS control

© 2002, Cisco Systems, Inc. All rights reserved.

Copyright © 2001, Cisco Systems, Inc. All rights reserved. Printed in USA.
Presentation_ID.scr

# Cisco's Solution Products

## - Cisco's Multiservice Switching Portfolio

Cisco.com

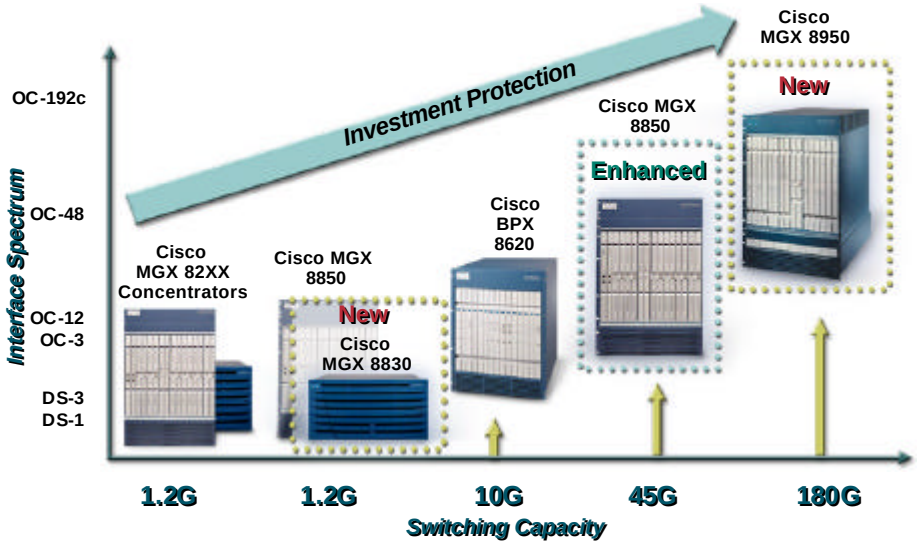


© 2002, Cisco Systems, Inc. All rights reserved.


# Cisco's Solution Products

## - MGX8000 Series Voice Gateway

Cisco.com

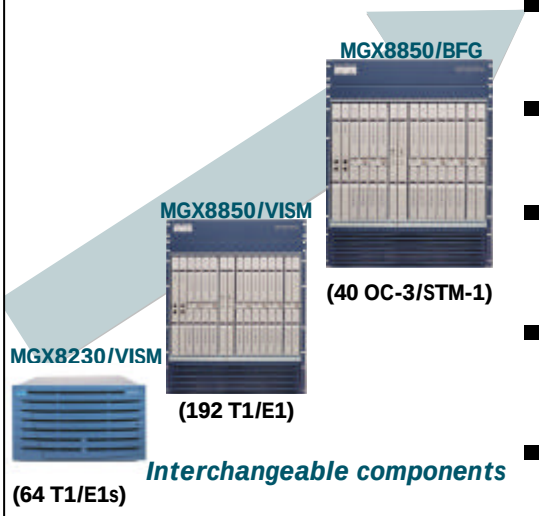


- Industry's most scalable packet voice gateway
  - 45 Gbps Backplane Capacity
- Industry's most flexible packet voice gateway
  - VoIP, VoATM(AAL1 and AAL2), MPLS
- Carrier class reliability
  - 1:1 Common Equipment
  - 1:N Service Module
- Cost-effective scaling
  - MGX 8230 VG for small sites and CPE
  - MGX 8850 VG for large sites
- Interchangeable components between the MGX 8850 VG and MGX 8230 VG
  - Identical hardware and software

© 2002, Cisco Systems, Inc. All rights reserved.


Copyright © 2001, Cisco Systems, Inc. All rights reserved. Printed in USA.
Presentation_ID.scr

# Cisco's Solution Products
## - MGX8000 VXSM Voice Card

Cisco.com

- 8064 DS0 Density/Card for hairpinning and G.711
- 4032 DS0 Density/Card for compressed voice (G.726, G.729a)

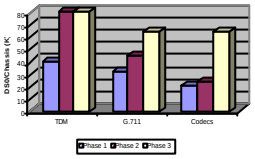


- Double-Height Card for the MGX 8850 for VoIP and VoATM
  - Existing Chassis facilitates NexGen cards for graceful evolution
  - Interworks with currently shipping cards
  - VoIP, VoATM and TDM hairpinning
- Support for OC-3/STM-1 TDM interfaces with clear path to support of OC-12/STM-4 TDM interfaces
- 1:1 Hot Standby with clear path to 1:N Hot Standby redundancy(phase2)
- OC-48c uplinks for IPoA and Native ATM (AXSM) with a path to support OC-192c
- Multiport Gig-E/POS uplinks for native IP (RPM-XF)

© 2002, Cisco Systems, Inc. All rights reserved.


# Cisco's Solution Products
## - MGX8000 RPM-XF

Cisco.com

- MIPS R7000 Route Processor, 64M flash, 512M memory
- 32 Network Processor ASICs arranged in a 4x8 matrix allowing parallel and pipeline forwarding
- 2 Million pps
- Cell Bus interface to MGX Backplane
- OC24 Serial Bus Switch inferface to MGX Backplane
- OC12-24 ATM SAR, 16K VC's, 6K IDBs
- Initial FCS with MGX 8850 PXM-45 and Jupiter platforms
- Supported back cards: 1-GigE, 1-OC12 POS, Management back card

© 2002, Cisco Systems, Inc. All rights reserved.


Copyright © 2001, Cisco Systems, Inc. All rights reserved. Printed in USA.
Presentation_ID.scr

# Cisco's Solution Products

## - PGW2200 Node Internal Architecture

Cisco.com

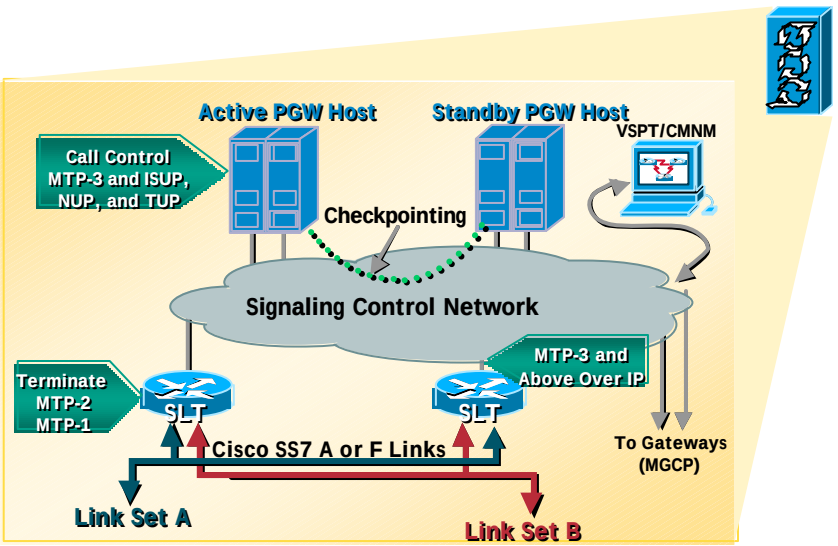


© 2002, Cisco Systems, Inc. All rights reserved.


# Cisco's Solution Products

## - CSPS(Cisco SIP Proxy Server) Major Features

Cisco.com

- RFC2543 compliant Proxy Server, Redirect Server, and Registrar. Supports Stateful and Stateless modes.
- Operating Systems: Linux 2.2.13 and Solaris 2.8
- Based on Apache 2.0 code
- Performance: up to 100cps, based on platform CPU
- Routing - Number Expansion, Translations, Next-Hop Routing
  - Static and Dynamic Registrations
  - ENUM (E.164 -> DNS mappings)
  - GKTMP interface
  - Static Routes
  - DNS SRV and A record lookups

- CSPS Redundancy via DNS SRV or DNS Round-Robin Load-Balancing
- Registry Redundancy via "Farming"
- Location Server interaction - GKTMP, MySQL Database
- Call Forwarding - CFBusy, CFNoAnswer, CFUnavailable, CFUnconditional
- Authentication via HTTP Digest or CHAP Password
- CDR Accounting via RADIUS

© 2002, Cisco Systems, Inc. All rights reserved.


Copyright © 2001, Cisco Systems, Inc. All rights reserved. Printed in USA.
Presentation_ID.scr

**Copyright © 2001, Cisco Systems, Inc. All rights reserved. Printed in USA.**
**Presentation_ID.scr**