Mobile Wireless Solution for IP RAN

Introduction of Cisco's Standard based Mobile Wireless IP RAN Solution for LGE

hosung Jung
hsjung@cisco.com
Technical Marketing Engineer
Mobile Wireless Group

Cisco Systems

© 1999, Cisco Systems, Inc.

Agenda

- Cisco IP RAN Architecture
- IP RAN Solution Product
- Possible VoIP Deployment Scenario

© 1999, Cisco Systems, Inc.

Copyright © 1998, Cisco Systems, Inc. All rights reserved. Printed in USA.

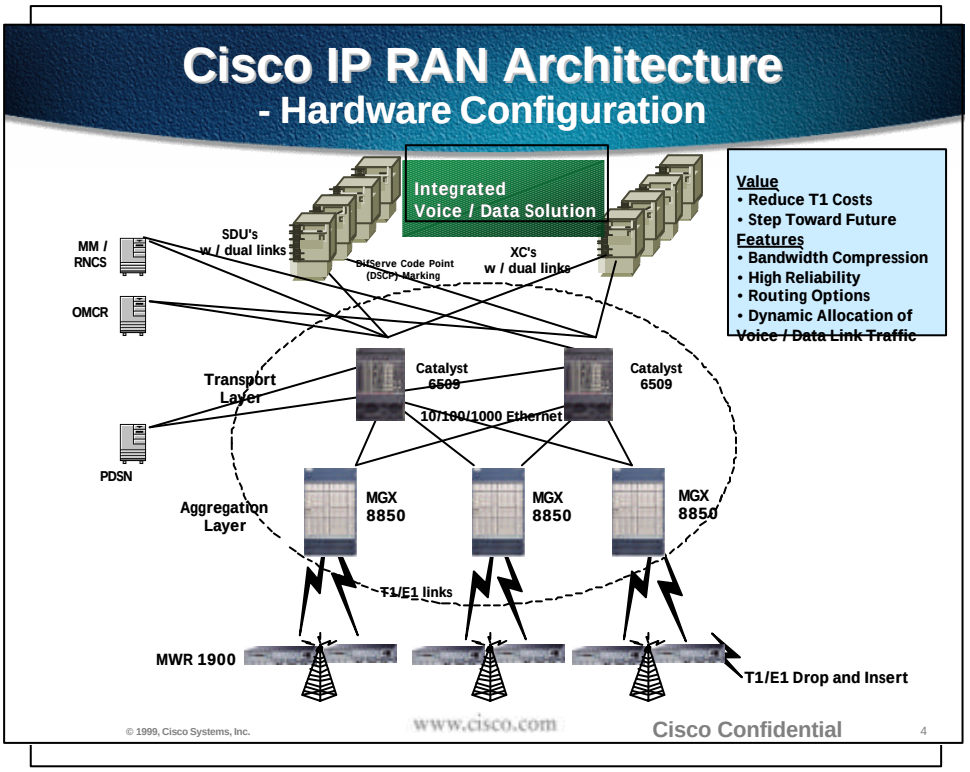

Copyright © 1998, Cisco Systems, Inc. All rights reserved. Printed in USA.

Cisco IP RAN Architecture
- Protocol Specification

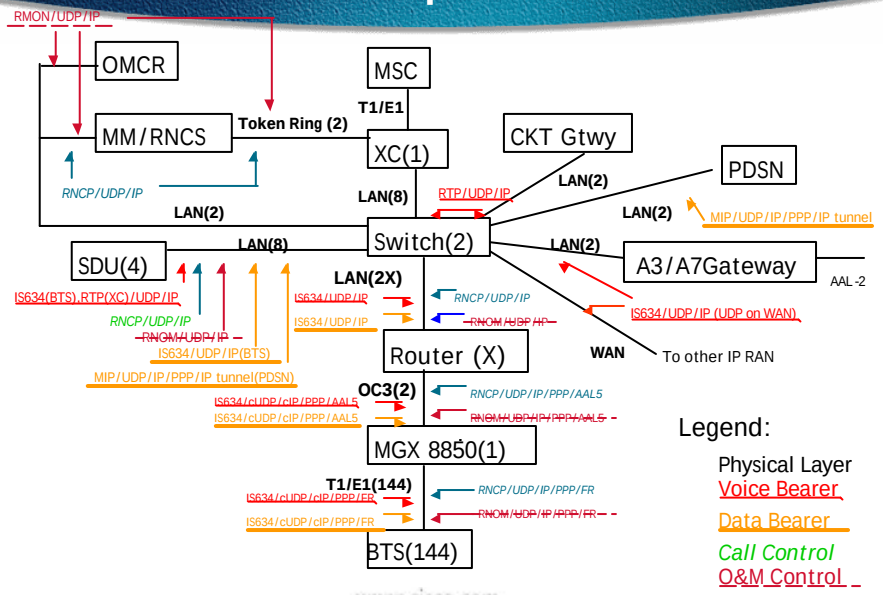

© 1999, Cisco Systems, Inc. www.cisco.com Cisco Confidential 5

Cisco IP RAN Architecture
- System Level Traffic Flows : Voice Bearer

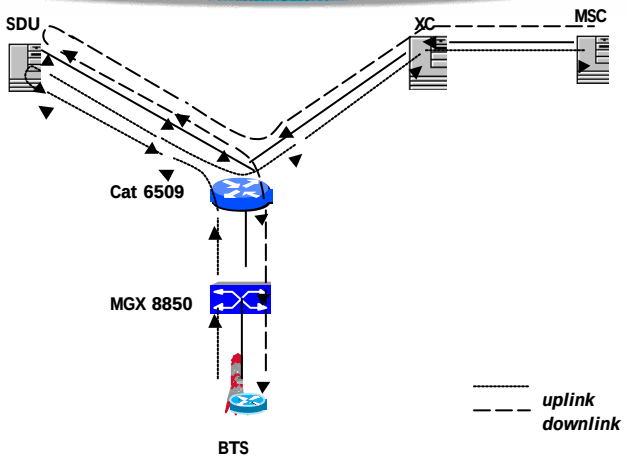

Uplink: BTS -> MGX -> Cat -> SDU -> Cat -> XC -> MSC

Downlink: MSC -> XC -> Cat -> SDU -> Cat -> MGX -> BTS

© 1999, Cisco Systems, Inc. www.cisco.com Cisco Confidential 6

Copyright © 1998, Cisco Systems, Inc. All rights reserved. Printed in USA.

Cisco IP RAN Architecture
- Protocol Stack : Voice Bearer

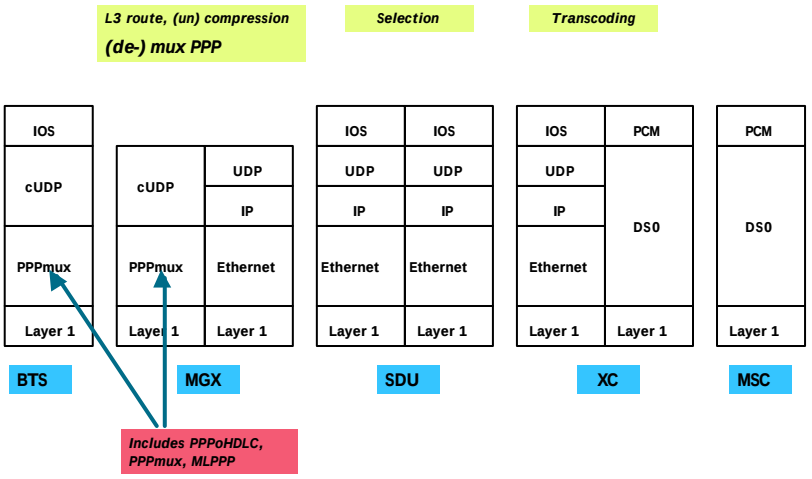

© 1999, Cisco Systems, Inc. www.cisco.com Cisco Confidential 7

Cisco IP RAN Architecture
- System Level Traffic Flows : Data Bearer

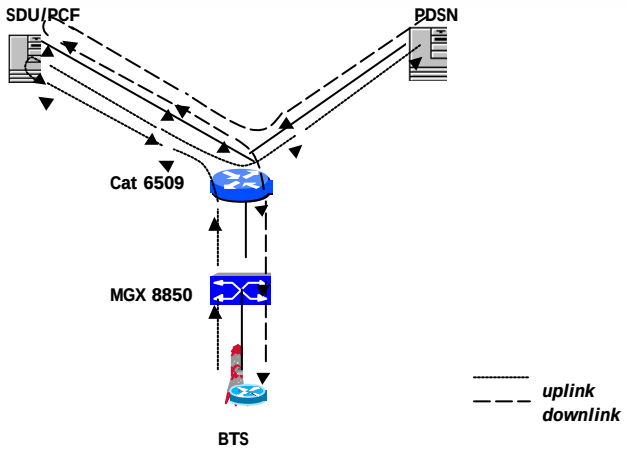

Uplink: BTS -> MGX -> Cat -> SDU/PCF -> Cat -> PDSN

Downlink: PDSN -> Cat -> SDU/PCF -> Cat -> MGX -> BTS

© 1999, Cisco Systems, Inc. www.cisco.com Cisco Confidential 8

Copyright © 1998, Cisco Systems, Inc. All rights reserved. Printed in USA.

Cisco IP RAN Architecture
- Protocol Stack : Data Bearer

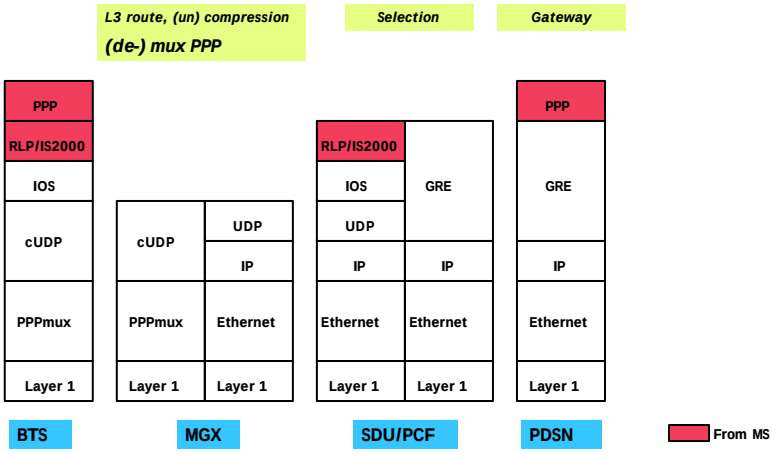

© 1999, Cisco Systems, Inc. www.cisco.com Cisco Confidential 9

Cisco IP RAN Architecture
- System Level Traffic Flows : Signalling

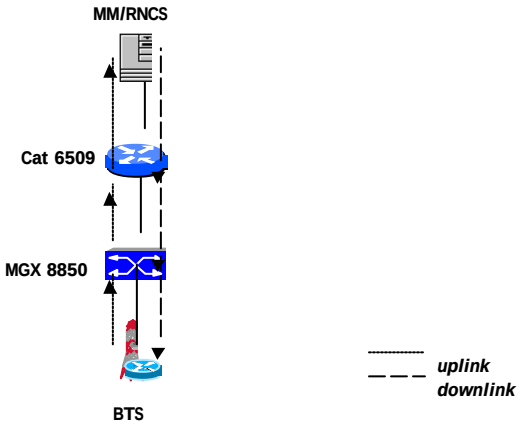

Uplink: BTS -> MGX -> Cat -> MM/RNCS

Downlink: MM/RNCS -> Cat -> MGX -> BTS

© 1999, Cisco Systems, Inc. www.cisco.com Cisco Confidential 10

Copyright © 1998, Cisco Systems, Inc. All rights reserved. Printed in USA.

Cisco IP RAN Architecture
- Protocol Stack : Signalling

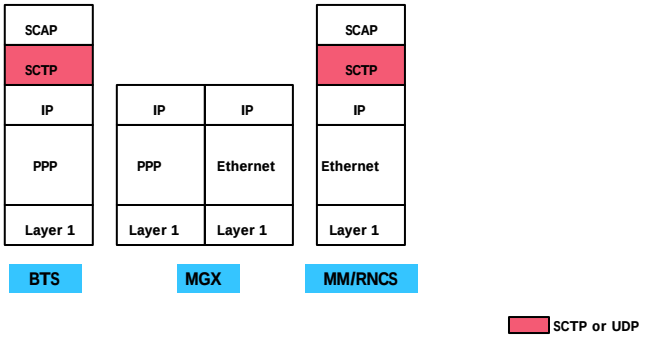

© 1999, Cisco Systems, Inc.

Cisco IP RAN Architecture
- System Level Traffic Flows : OAM&P

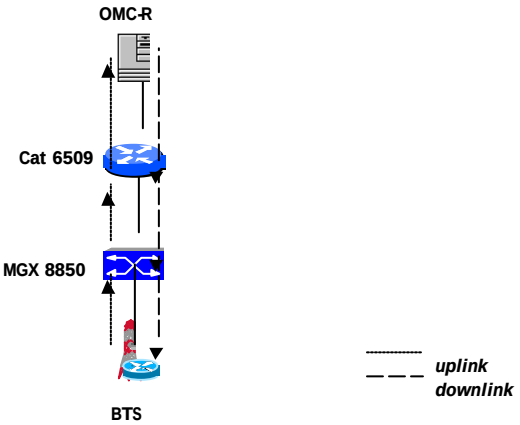

Uplink: BTS -> MGX -> Cat -> OMC-R

Downlink: OMC-R -> Cat -> MGX -> BTS

© 1999, Cisco Systems, Inc.

Copyright © 1998, Cisco Systems, Inc. All rights reserved. Printed in USA.

Cisco IP RAN Architecture
- Protocol Stack : OAM&P

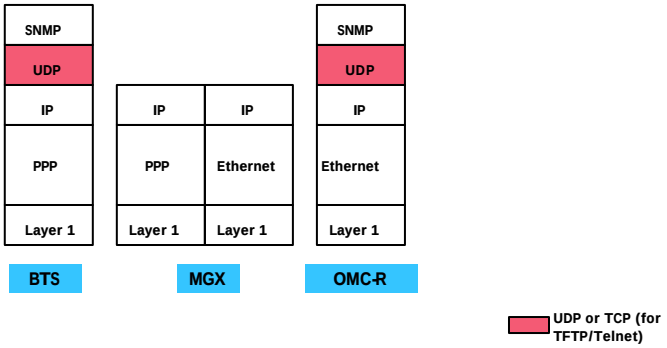

© 1999, Cisco Systems, Inc.

Cisco IP RAN Architecture
- Link Efficiency of Chosen Stack

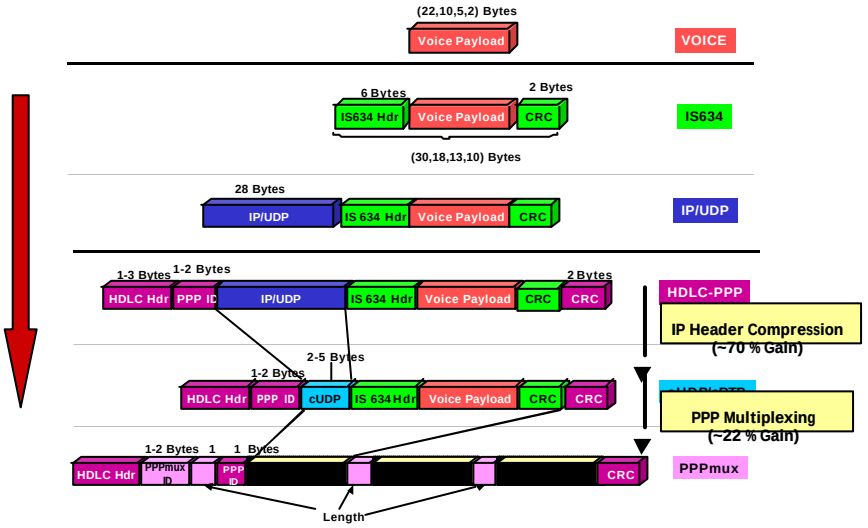

© 1999, Cisco Systems, Inc.

Copyright © 1998, Cisco Systems, Inc. All rights reserved. Printed in USA.

Cisco IP RAN Architecture
- Critical Performance Requirements

Encaps	Calls per backhaul
AAL1	72
AAL2	142
UDP/IP/PPP	72
CUDP/PPP	142
CUDP/PPP_NO_CRC	154
CUDP/PPP/FR	132
CUDP/PPPMUX	154
CUDP/PPPMUX_NO_CR	158
CUDP/PPPMUX/FR	150
CUDP/MPLS	120
MPLS_COMP draft-berger-mpls-hdr-comp-00	142
MPLS	142

- For initial deployment, Motorola and Cisco are comparing relative bandwidth efficiencies as the IP value proposition.
- Header Compression (cUDP) is at parity with ATM AAL2 over T1
- Adding PPPMux gives our IP solution a 5% advantage in efficiency..not much, but we'll take it..
- PPPMux:
  - New standard (draft-ietf-pppext-pppmux-00.txt)
  - Very Processor intensive
  - Will be supported at both ends of the span (Bam-Bam and Wilma)

© 1999, Cisco Systems, Inc.

Cisco IP RAN Architecture
- Backhaul Aggregation on MGX

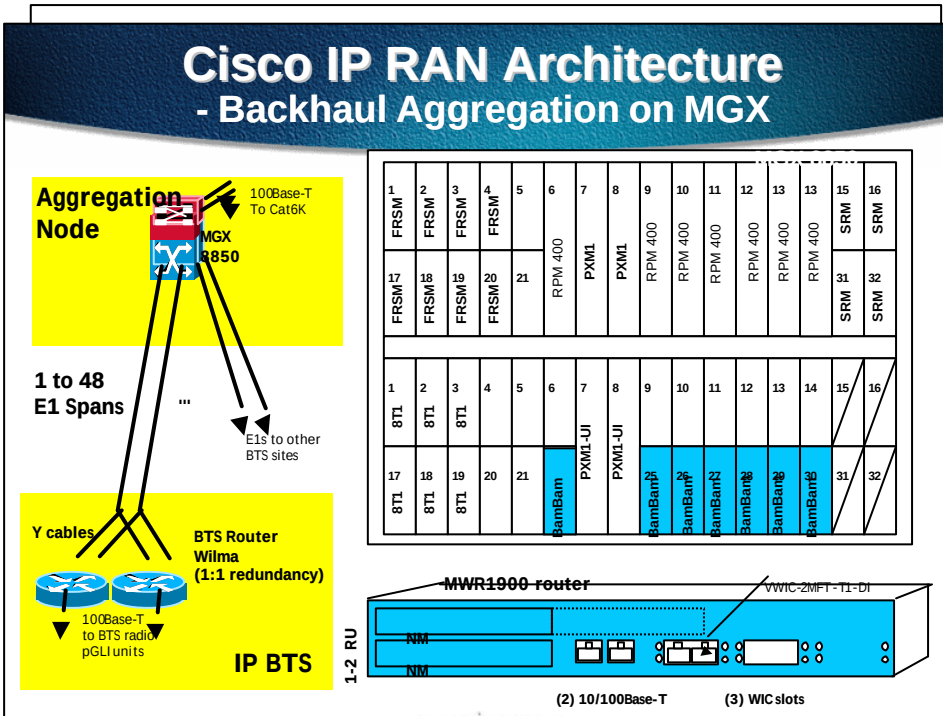

© 1999, Cisco Systems, Inc.

Copyright © 1998, Cisco Systems, Inc. All rights reserved. Printed in USA.

CiscoIP RAN Architecture
- MWR1900 – Mobile Wireless Edge Router

***KEY FEATURES*:**

- **WAN Interface: T1/E1 fractional T1/E1**
  - Scalable from 1 to 4 T1/E1 spans (2 T1/E1 spans per WAN Interface Card)
  - Integrated CSU/DSUs
  - T1/E1 Protection Switching using "Y" cabling between redundant routers
  - T1/E1 Span Grooming via Drop and Insert multiplexer
- **LAN Interface:** Dual 10/100 Base-T ports
- **One Network Module Slot:** future use (e.g., additional Ethernet ports)
- **Software:** Cisco IOS, OSPF, wirespeed PPPMux, wirespeed cRTP/cUDP, MLPPP, QoS (IP Precedence, DiffServ, Traffic Shaping, LLQ, CB-WFQ), redundancy (HSRP+), DHCP

- **Mechanical/Physical: General NEBS compliance**
  - Dimensions: 1RU high, less than 12" deep (375mm)
  - Power: 27VDC (48VDC version also available)
  - Environmental: extended operating temperature: -10C to + 55C

© 1999, Cisco Systems, Inc.

Copyright © 1998, Cisco Systems, Inc. All rights reserved. Printed in USA.
Presentation_ID.scr

Cisco IP RAN Architecture
- MWR1900 – Mobile Wireless Edge Router

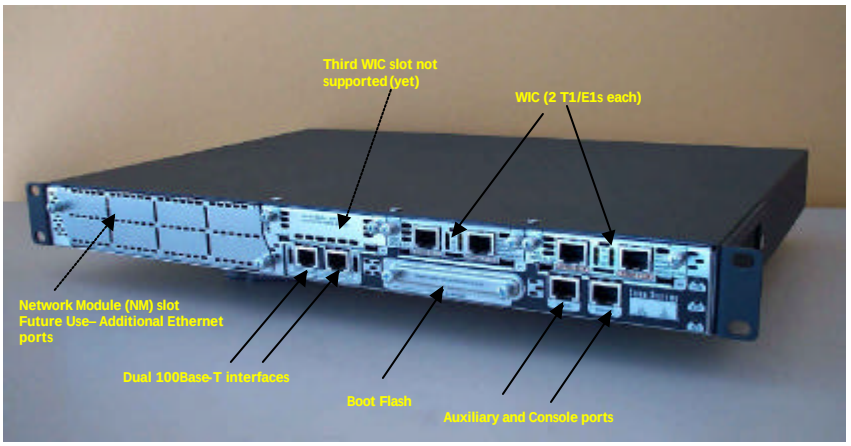

© 1999, Cisco Systems, Inc.

Cisco IP RAN Architecture
- MGX8850/RPM – Aggregation Node

Cisco MGX-RPM-1FE-CP: Compression Module

- **RPM Co-Processor Backcard for MGX 8850/8250**
- **Off-loads RPM to support wirespeed PPPMux and cUDP/cRTP**
- **Provides single FE port**

Cisco MGX-RPM -1FE-CP

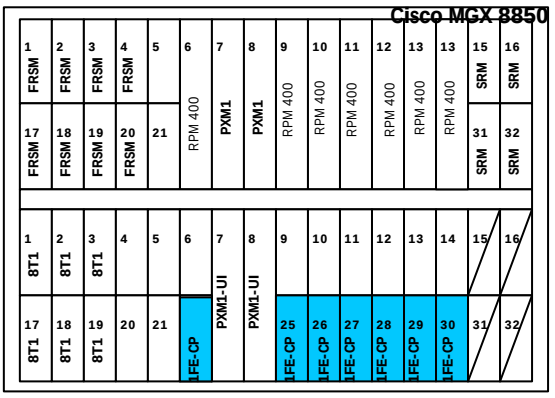

© 1999, Cisco Systems, Inc.

Copyright © 1998, Cisco Systems, Inc. All rights reserved. Printed in USA.

Cisco IP RAN Architecture
- Cisco3725 – Mobilw Wireless Edge Router

Features:

- 2 - NM Slots (one double -wide capable)
- 2 - 10/100 FE Ports
- 3 - WIC slots
- 2 - AIM slots (internal)
- 100 Kpps Performance
- Aux. & Console ports (115.2 Kbps)
- Internal and External Flash (32 - 128MB)
- DIMM DRAM (128 - 256MB)
- Field Replaceable Units: Power Supply
- Dimensions: 3.5" (2RU) x 17.25" x 14.7"

Options:

- -48V In Line Power
- External RPS (System & In Line)*

FCS 03/11/02
US List Price - $8,500
Cisco IOS Release 12.2(8)T

© 1999, Cisco Systems, Inc.

Cisco IP RAN Architecture
- Cisco3745 – Mobilw Wireless Edge Router

Features:

- 4 - NM Slots (two double -wide capable)
- 2 - 10/100 FE Ports
- 3 - WIC slots
- 2 - AIM slots (internal)
- 225 Kpps Performance
- Aux. & Console ports (115.2 Kbps)
- Internal and External Flash (32 - 128MB)
- SODIMM DRAM (128 - 256MB)
- OIR: NMs & RPS
- FRUs: motherboard, I/O board, Fan Tray, PS
- Dimensions: 5.25" (3RU) x 17.25" x 15"

Options:

- -48V In Line Power
- Internal RPS (System & In Line)
- DC system power (single & RPS)

FCS 03/11/02
US List Price - $12,000
Cisco IOS Release 12.2(8)T

© 1999, Cisco Systems, Inc.

Copyright © 1998, Cisco Systems, Inc. All rights reserved. Printed in USA.

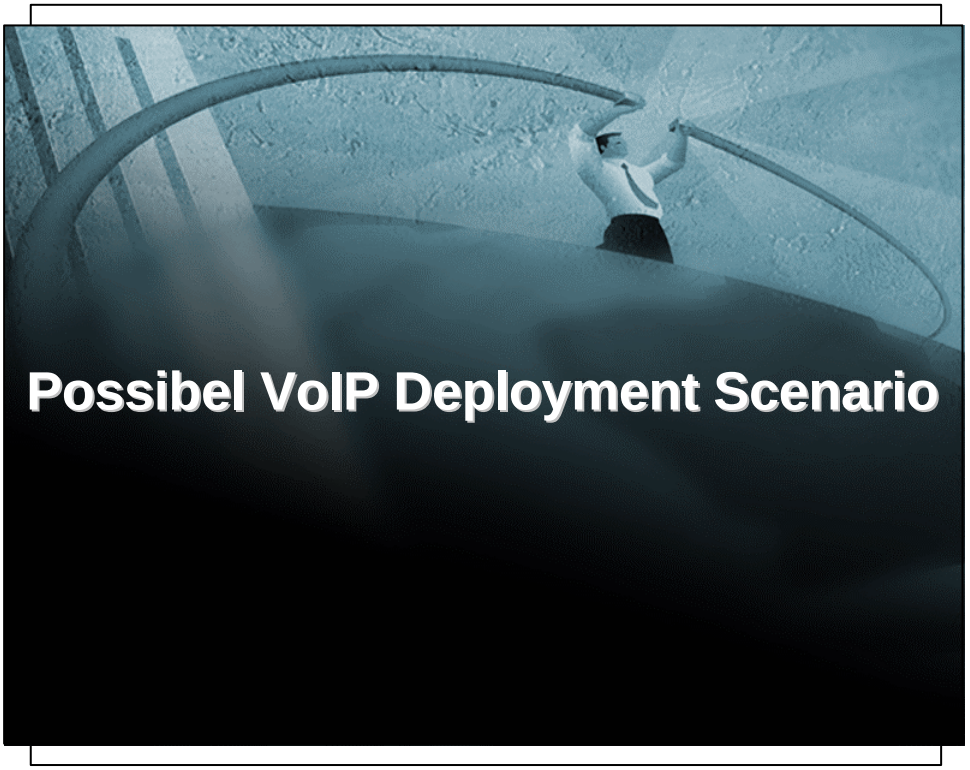

HC for VoIP in CDMA2000

- End-to-End VoIP MS Model Architecture

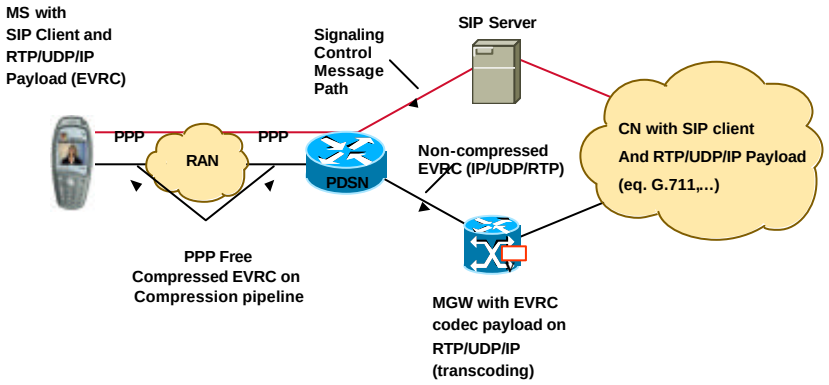

Source : Header compression for Voice-over-IP in CDMA2000 Rev. 0.3 , montreal , 2001

© 1999, Cisco Systems, Inc. www.cisco.com Cisco Confidential 24

Copyright © 1998, Cisco Systems, Inc. All rights reserved. Printed in USA.

HC for VoIP in CDMA2000
- End-to-End VoIP MS Model Protocol Stack

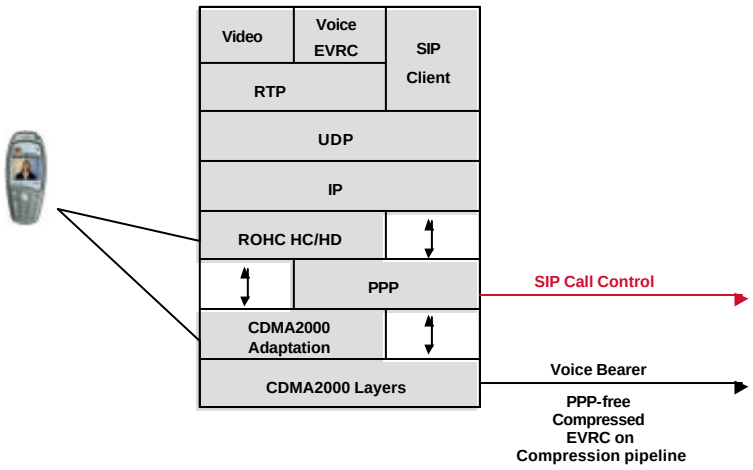

Source : Header compression for Voice-over-IP in CDMA2000 Rev. 0.3 , montreal , 2001

© 1999, Cisco Systems, Inc. www.cisco.com Cisco Confidential 25

HC for VoIP in CDMA2000
- Hybrid Voice-over-IP MS Model Architecture

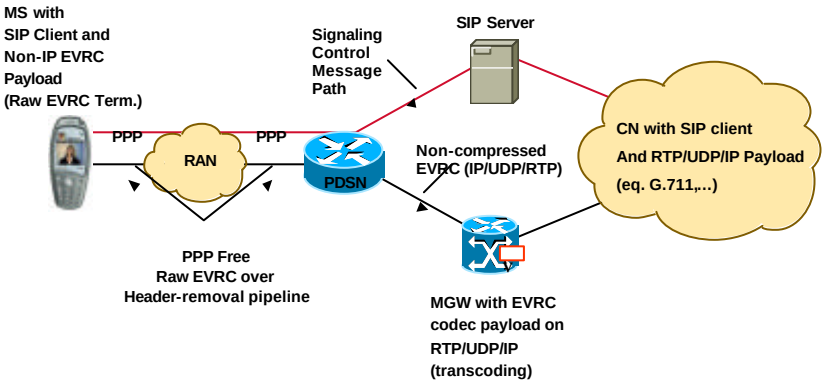

Source : Header compression for Voice-over-IP in CDMA2000 Rev. 0.3 , montreal , 2001

© 1999, Cisco Systems, Inc. www.cisco.com Cisco Confidential 26

Copyright © 1998, Cisco Systems, Inc. All rights reserved. Printed in USA.

HC for VoIP in CDMA2000
- Hybrid VoIP MS Model Protocol Stack

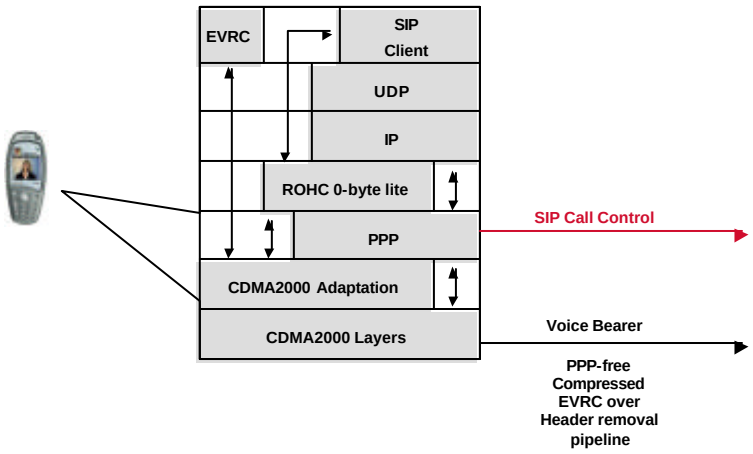

Source : Header compression for Voice-over-IP in CDMA2000 Rev. 0.3 , montreal , 2001

© 1999, Cisco Systems, Inc. www.cisco.com Cisco Confidential 27

QoS Framework for CDMA2000
- Mapping of Traffic Classes to S.I Types

Traffic Class	S.I Type	Priority	H.C	Appplication
Background	Primary [S.I Type 1]	Very Low	VJ RFC2507	FTP, Email,Streaming, bulk downloads
Interactive	Primary [S.I Type 1]	Low	VJ RFC2507	Web browsing, Instant messaging, news, telnet, SSH
Streaming	Secondary [S.I Type 3]	High	ROHC	Streaming audio and video
	Secondary [S.I Type 1]	High	ROHC RFC2508	Streaming audio and video
Conversational	Secondary [S.I Type 2]	Very High	LLA ROHC Header Striping / Generation	EVRC VoIP (for end-to-end VoIP MS and Hybrid VoIP MS)
	Secondary [S.I Type 3]	Very High	ROHC RFC2508	Interactive voice and video

- SI-TYPE _1 : identifies a primary service instance for re-transmitting RLP that carries PPP traffic that is delay insensitive but error sensitive.
- SI-TYPE _2 : identifies a secondary/auxilliary service instance with no RLP framing that serves to carry cdma2000 voice codecs that are synchronous with the cdma2000 air framing.
- SI-TYPE _3 : identifies a secondary/auxilliary service instance for non re-transmitting RLP that carries PPP traffics that is delay sensitive but error insensitive,and is asynchronous with the cdma2000 air framing.

Source : PR002 QoS Report – Concept,Architecture and mechanisms (Release C3) , Kyoto, Sep. 2001

© 1999, Cisco Systems, Inc. www.cisco.com Cisco Confidential 28

Copyright © 1998, Cisco Systems, Inc. All rights reserved. Printed in USA.

QoS Framework for CDMA2000
- Edge-to-Edge (MS-PDSN) and PPP Link Layer QoS Signaling

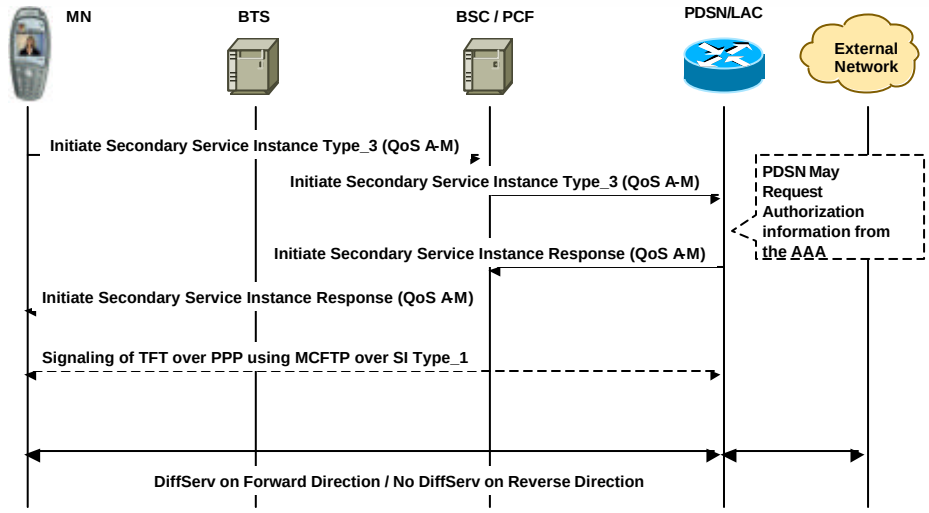

Source : PR002 QoS Report – Concept,Architecture and mechanisms (Release C3) , Kyoto, Sep. 2001

© 1999, Cisco Systems, Inc. www.cisco.com Cisco Confidential 29

QoS Framework for CDMA2000
- Single PPP over multiple A8-A10 connections

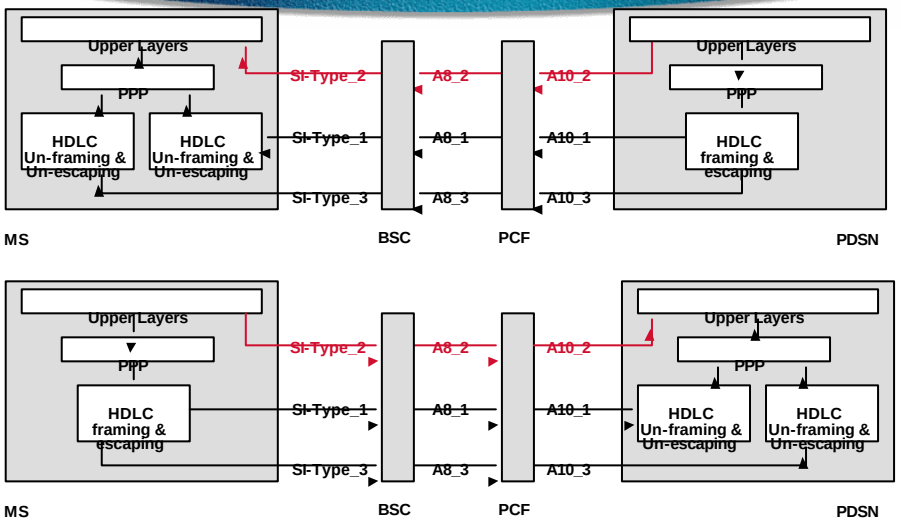

Source : PR002 QoS Report – Concept,Architecture and mechanisms (Release C3) , Kyoto, Sep. 2001

© 1999, Cisco Systems, Inc. www.cisco.com Cisco Confidential 30

Copyright © 1998, Cisco Systems, Inc. All rights reserved. Printed in USA.

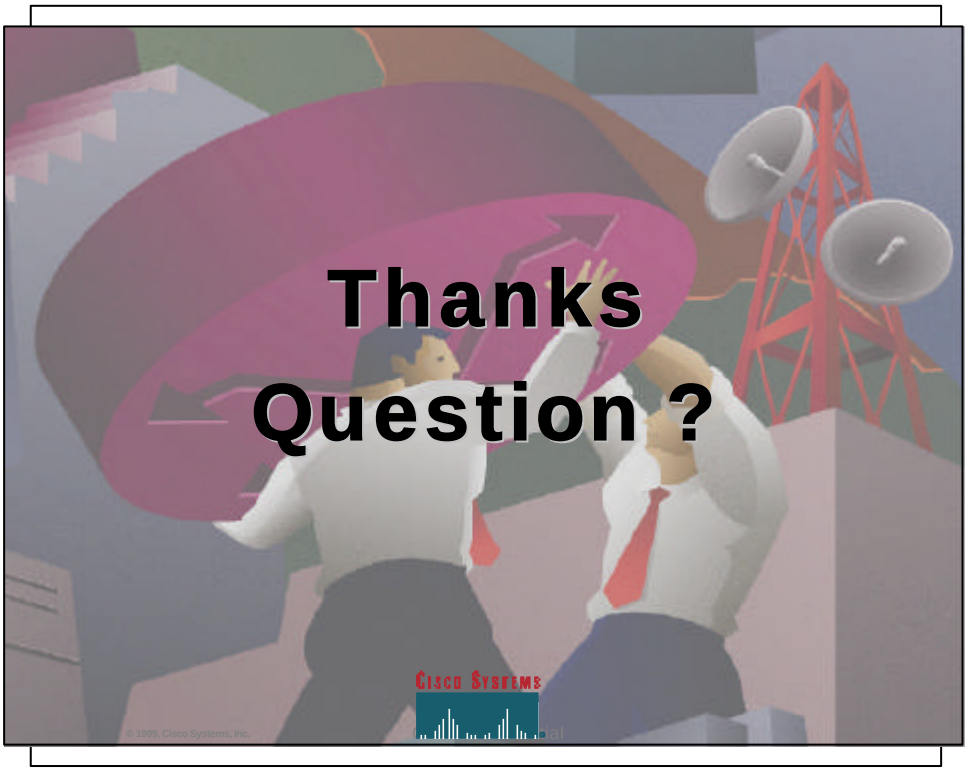

Copyright © 1998, Cisco Systems, Inc. All rights reserved. Printed in USA.