SAN for Business Continuity

How Cisco IT Achieves Subminute Recovery Point Objective

A Cisco on Cisco Case Study: Inside Cisco IT

Overview

- Challenge

  Improve recovery point objective (RPO) and recovery time objective (RTO) for ERP database disaster recovery

- Solution

  Use fibre channel over IP (FCIP) with EMC SRDF/A

- Results

  Sub-minute RPO over a distance of 3000 miles and improved RTO

- Next Steps

  Use FCIP to unify all Cisco IT and Engineering SANs

Background: Replication Terms

- Recovery point objective (RPO): How up-to-date the database is when restored to service
- Recovery time objective (RTO): How long it takes to bring the disaster recovery (DR) database online with the desired RPO
- Perfect RPO (zero seconds) requires synchronous replication between sites
- Because Cisco's sites are 3000 miles apart, Cisco strives for RPO < 60 seconds

Challenge: Improve RPO and RTO for ERP Database Disaster Recovery

- Cisco uses EMC SRDF for local database replication
- What to use for replication between production and DR databases?

  Production database are in San Jose, California

  DR is 3000 miles away, in Research Triangle Park (RTP), North Carolina

Challenge: Improve RPO and RTO for ERP Database Disaster Recovery (Contd.)

- EMC SRDF/S in synchronous mode creates too much latency
  - Over fibrechannel, every 100 miles adds 1ms latency due to speed of light
  - Round-trip time (RTT) latency for transferring a single write I/0 = 61 milliseconds
  - A transaction that usually takes ten seconds might take two minutes with SRDF/S: unacceptable

Challenge: Electronic Journaling

- What it is:
  - Application-based asynchronous process to support DR
  - New transactions are first stored in redo log before being committed to database volumes
  - When redo log fills up, log is copied to create an archive log
  - Archive log is copied over the WAN to RTP for application to DR database
  - Sequential archive logs contain a map for all changes occurring in production databases between two points in time

Challenge: Electronic Journaling

- Drawbacks of previous electronic journaling DR process
  - High management overhead required for host-based archive-replication scripts—one for each database on each host
  - Need to use host CPU resources for compression, performing a network push to remote DR hosts, and applying logs
  - Shared host resources for DR and development: the need to change partition sizes during DR took time and increased RTO
  - Log management issues
  - Potential for getting too far behind on applying logs to catch up
  - Outage required during failback
  - Potential for database corruption, a risk of real-time or near-time replication

Solution: 1. Unify Cisco SANs

- Cisco connected its two Cisco MDS 9000 Family Switches, one for each fabric, with FCIP

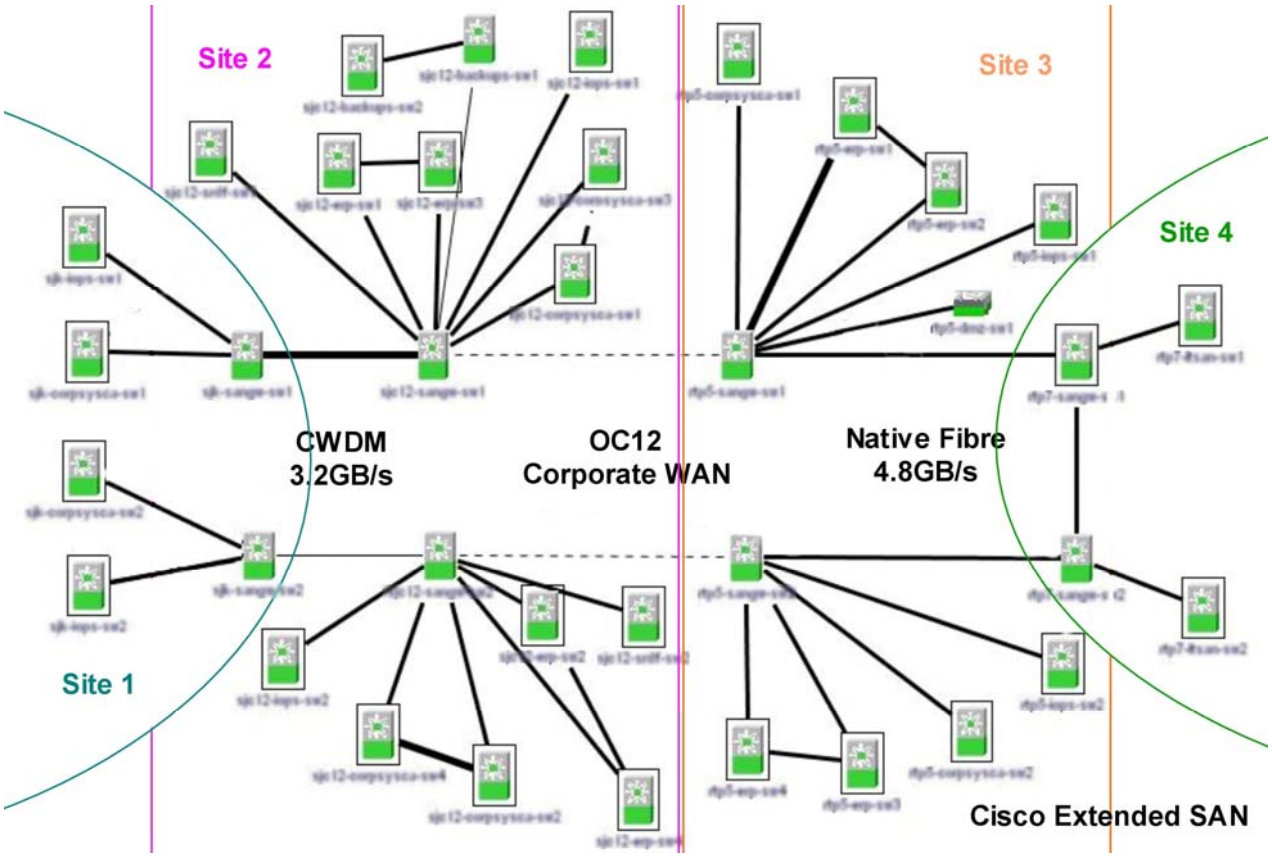

Solution: 1. Unify Cisco SANs

BEFORE FCIP: Host-Based Replication

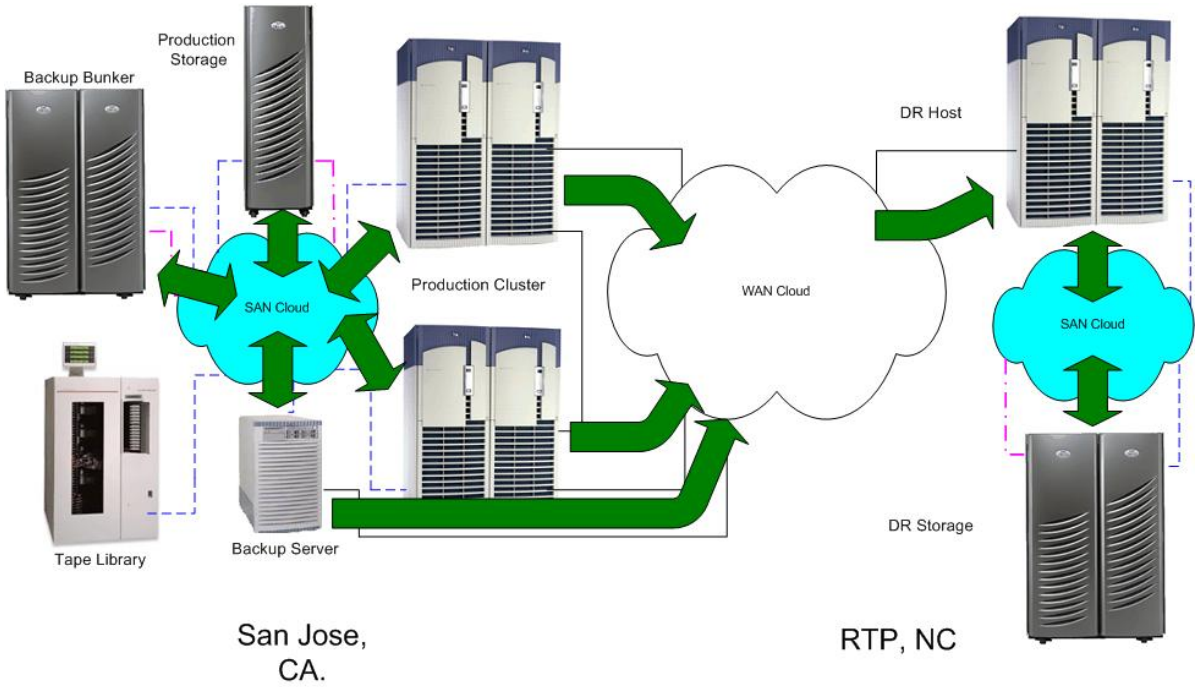

Host Based Replication Before FCIP

Green arrows show data flow

Solution: 1. Unify Cisco SANs

AFTER FCIP: Array-Based Replication

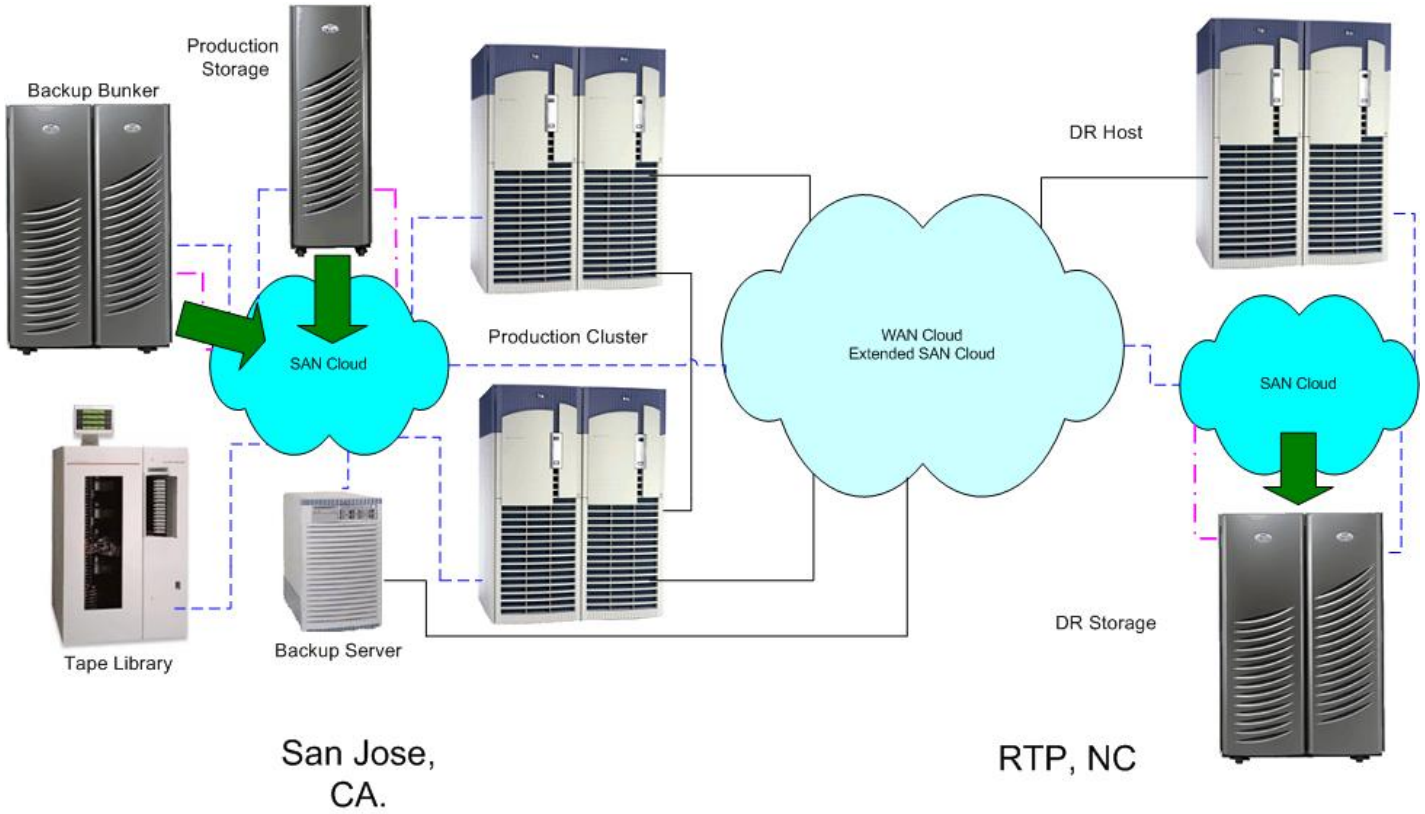

Array Based Replication With FCIP

Green arrows show data flow

Solution: 2. Achieve Incremental Relationship

- Goal: Maintain an incremental relationship between production and DR databases
  - If DR database falls too far behind in application of logs, refresh database from production disk backup
- Solution: Use EMC SRDF/S to copy data directly from production backup frame to DR frame over FCIP, every six to 24 hours
  - Only transmit changes since last backup
- Limitation: Interruption to replication process means that DR database will be inconsistent with production database, and therefore not restartable

Solution: 3. Achieve Asynchronously Updated, Consistent Relationship Without Latency

- Cisco IT conducted a pilot using EMC SRDF/A (asynchronous), designed to overcome challenges of long-distance replication
- If SRDF/A image is interrupted, no more than two cycles—60 seconds for Cisco—are lost, and remote site remains consistent and restartable
- Limitation: Each change is transferred three times, in archive log, redo log, and database volume

  After FCIP compression, ~1.75 times the bandwidth required for write changes traveled over the WAN

  Therefore, solution could not scale across multiple DR environments unless Cisco upgraded WAN to OC-48
- But, this gave Cisco IT an idea…

Solution: 4. Transfer Only the Archive and Redo Logs

By transferring only the archive and redo logs, Cisco improved RPO compared to using internally-developed scripts for archive log transfer

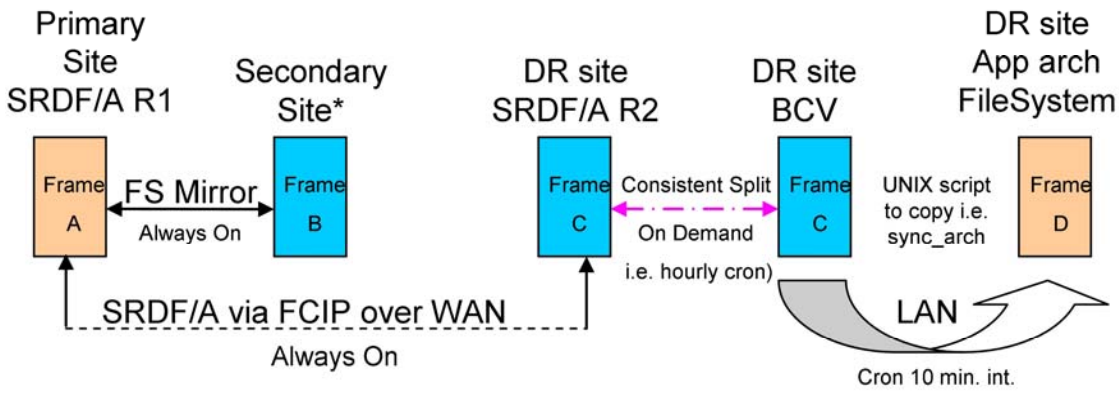

Archive Log Transfer Flow

Only 1-2 logs are in transit (unavailable) at any given time

Results: Greatly Improved Replication

- Sub-minute RPO over a distance of 3000 miles
- RTO measured in minutes instead of hours
- Frame-to-frame transfer rates of 50MB/second
- Incremental relationship between production and DR, enabling failback without downtime
- Ability to refresh a 4TB database over the WAN in two hours, compared to 24 hours using a host-to-host transfer

Results: Greatly Improved Replication (Contd.)

- Single SAN view of four data centers
- No need to use host resources for replication, or to assign a DR host to apply logs in standby mode
- No production impact

Next Steps: Continue to Improve Replication Strategy

- Minimize amount of data transferred across Cisco WAN

  Establish concurrent SRDF/A relationships: one between production databases and remote DR, and another between production databases and a backup bunker

- Begin replicating Amsterdam databases in RTP, for a single view of entire IT SAN
- Use FCIP to tie Cisco IT SANs to Cisco Engineering SANs

Next Steps: Continue to Improve Replication Strategy (Contd.)

- Use FCIP as a fail-over path for campus inter-building SAN extensions, such as CWDM and dark fibre
- Implement FCIP and SRDF/A for other mission-critical ERP databases as Cisco increases WAN capacity between San Jose and RTP

To read the entire case study, or for additional Cisco IT case studies on a variety of business solutions, visit Cisco on Cisco: Inside Cisco IT
www.cisco.com/go/ciscoit

Americas Headquarters
Cisco Systems, Inc.
170 West Tasman Drive
San Jose, CA 95134-1706
USA
www.cisco.com
Tel: 408 526-4000
800 553-NETS (6387)
Fax: 408 527-0883

Asia Pacific Headquarters
Cisco Systems, Inc.
168 Robinson Road
#28-01 Capital Tower
Singapore 068912
www.cisco.com
Tel: +65 6317 7777
Fax: +65 6317 7799

Europe Headquarters
Cisco Systems International BV
Haarlerbergpark
Haarlerbergweg 13-19
1101 CH Amsterdam
The Netherlands
www-europe.cisco.com
Tel: +31 0 800 020 0791
Fax: +31 0 20 357 1100

Cisco has more than 200 offices worldwide. Addresses, phone numbers, and fax numbers are listed on the Cisco Website at **www.cisco.com/go/offices.**