Cisco Unified IP Phone 7906G

1

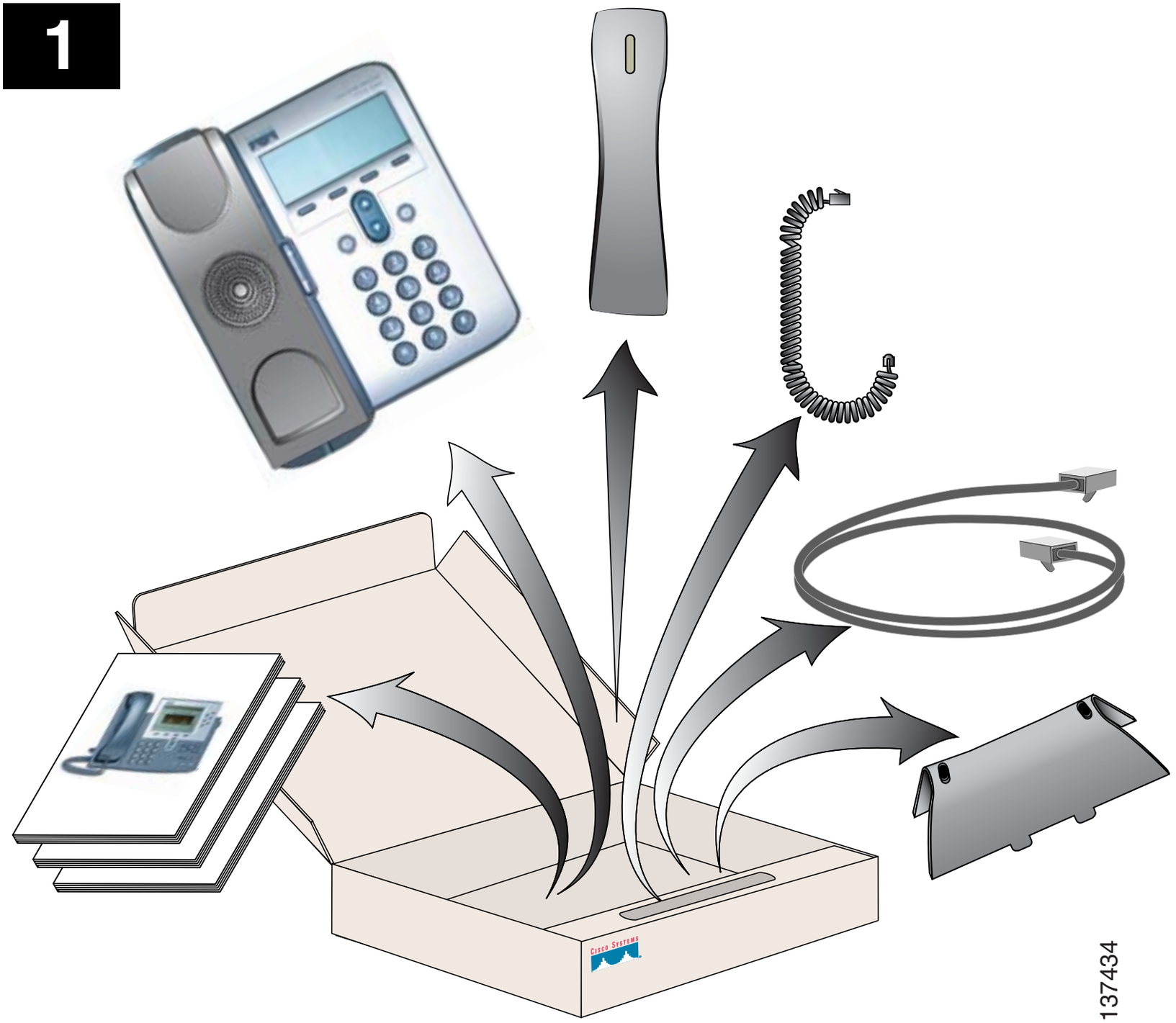

137434

2

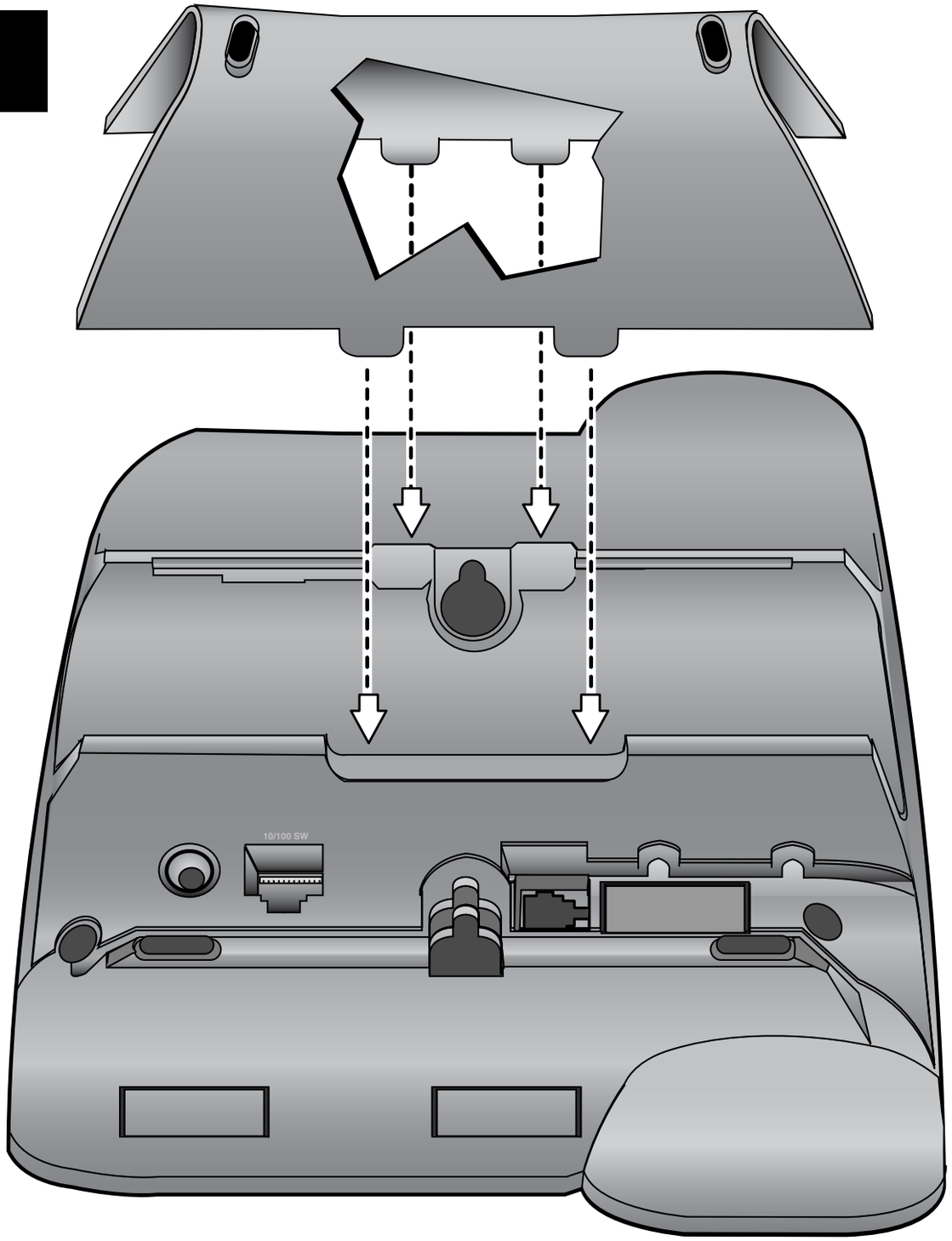

154388

3

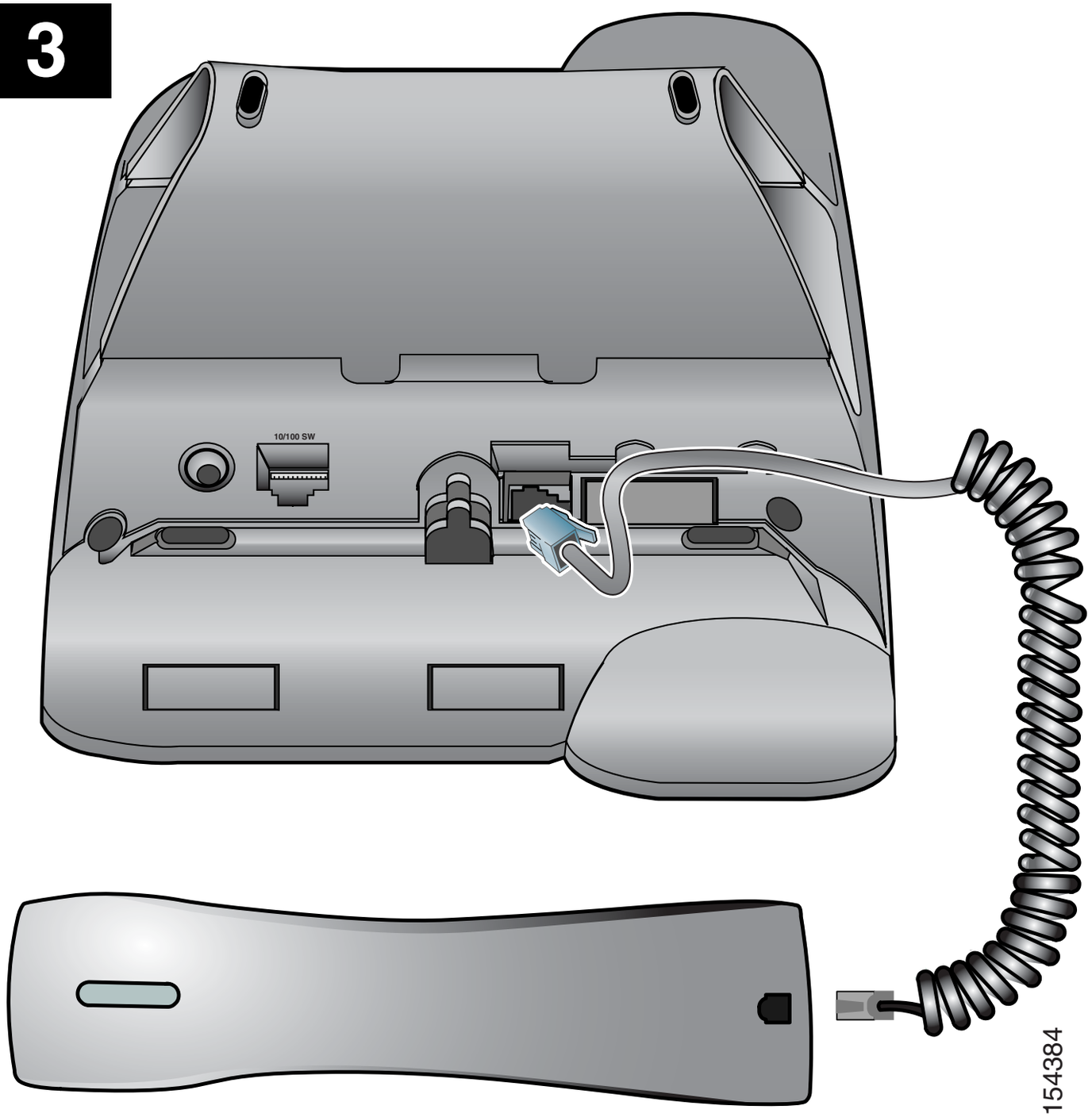

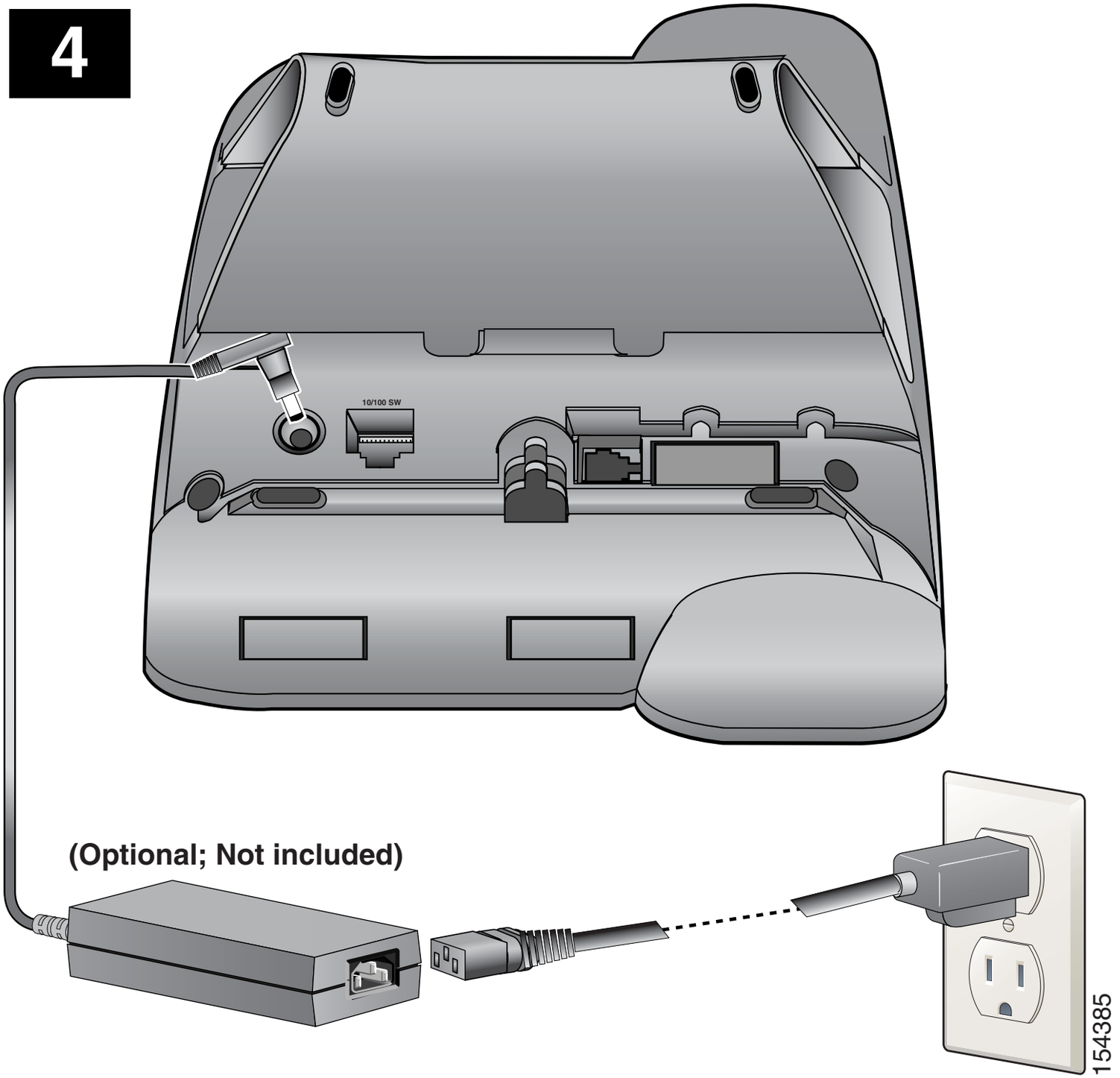
4
10/100 SW
(Optional; Not included)
154385

5

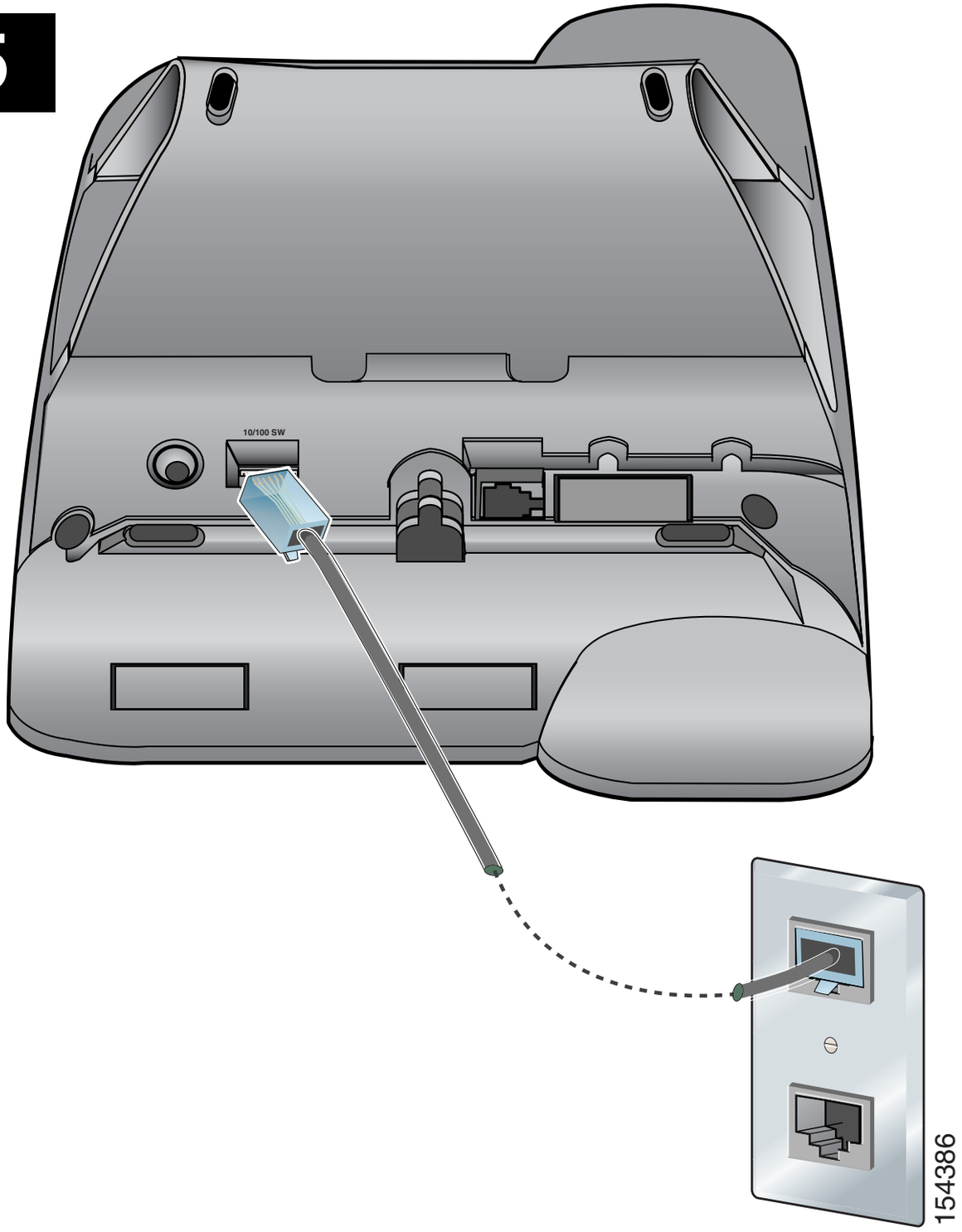

6

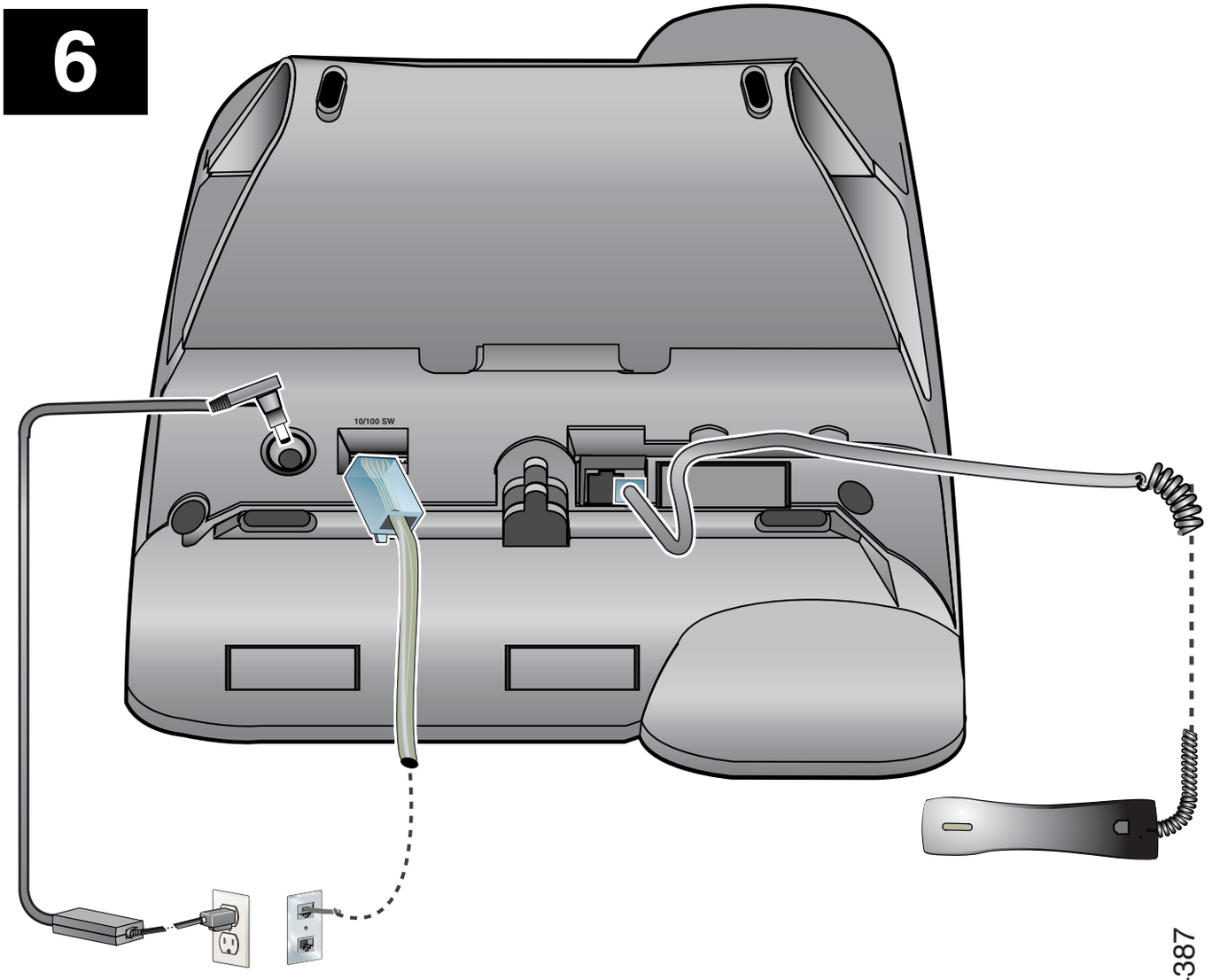

154387

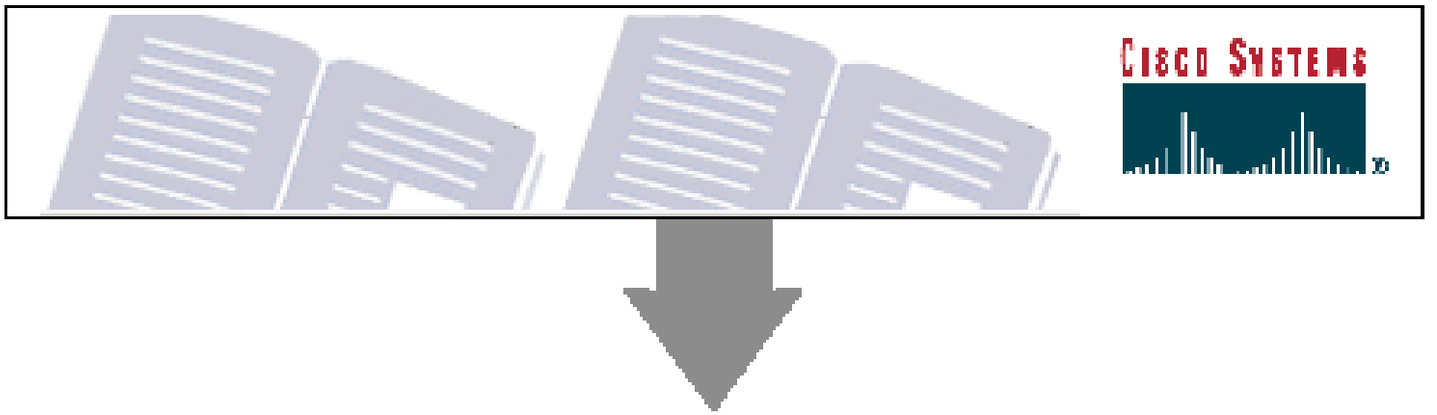

www.cisco.com/en/US/products/hw/phones/ps379/products_user_guide_list.html