Software version F9
May 2011

Cisco TelePresence MXP Series

Administrator guide

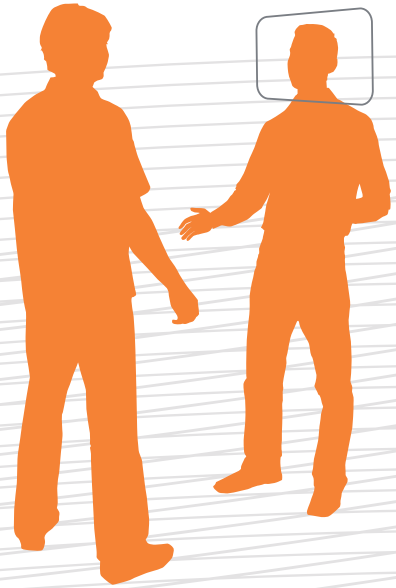

CHANGING
THE WAY PEOPLE
COMMUNICATE

D14791.01 MXP Series Administrator Guide F90, August 2011.

What's in this guide?

The top menu bar and the entries in the Table of Contents are all hyperlinks, just click on them to go to the topic.

We recommend you visit the Cisco web site regularly for an updated version of this guide. Go to: http://www.cisco.com/go/telepresence/docs

Table of contents

Chapter 1

Introduction

Thank you for choosing Cisco!

The Administrator Guide describes the Cisco TelePresence MXP Series video endpoints (F-series) and is designed for system administrators..

How to read this document

You will find that some places information has been copied from other chapters (but adapted, when needed) to let you have all the relevant information there and then. This helps eliminating the need to read through long sections before you can even think of getting started.

Our main objective with this user guide is to address your goals and needs. Please let us know how well we succeeded!

In this chapter...

What's new in version F9?

This version has no changes to the menus.

SIP FECC

Far end camera control (FECC) is now supported on SIP.

Applies to systems with controllable cameras.

Camera control from the web interface

The camera can be controlled from the web interface. Open the *Overview* pane and select *Overview* from the menu on top.

Applies to systems with controllable cameras.

Bugfixes

To see a complete overview of bugfixes, see the software release notes.

Software release note

The software release note is found at the Cisco web site.

Go to: http://www.cisco.com/en/US/partner/products/ps11423/prod_release_notes_list.html

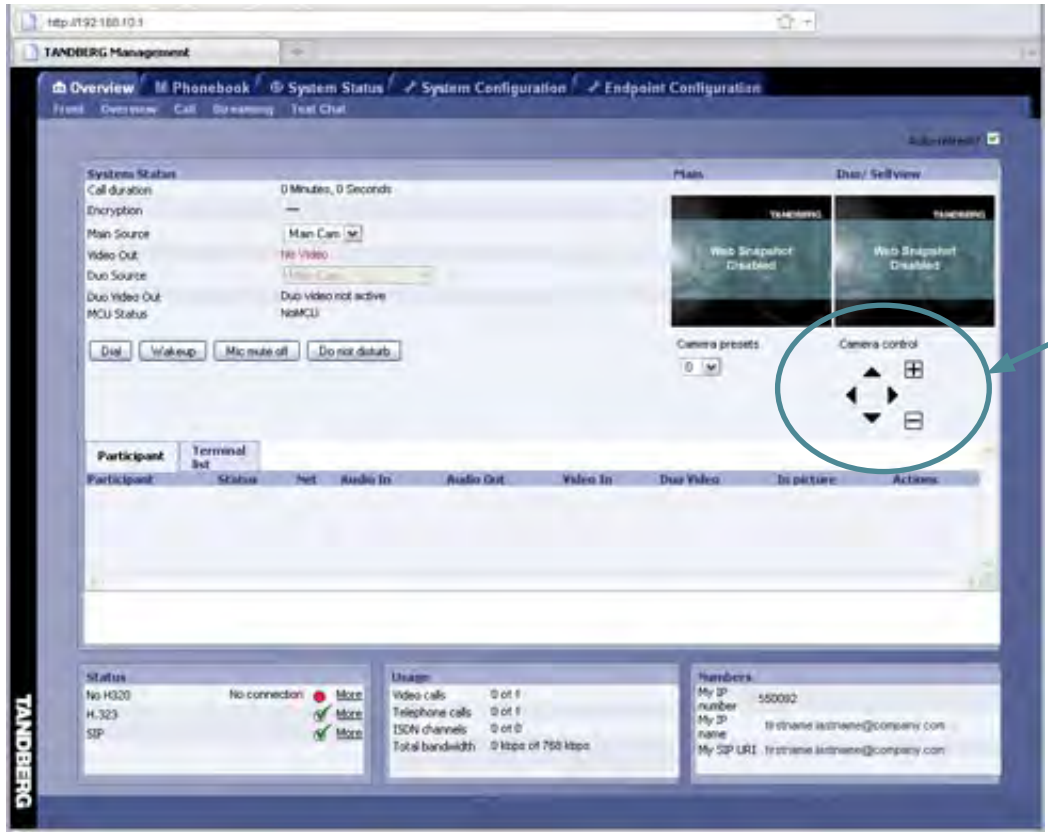

Camera control from the web interface.

Chapter 2

Getting started

This chapter introduces you to your MXP product and gets you up and going.

Remote control

For your convenience you can print out the description of the remote control and plastic laminate the page.

Installation Wizard

The Installation Wizard takes you through the basic configurations of the video system and is described in this section.

In this chapter...

Remote control TRC3

Mic Off turns your microphone on and off.

Press OK/Menu to show the menu and select menu items.

Volume + and – adjusts the Codec volume only and not the monitor volume.

Layout key toggles between full screen and different display layouts.

Press the Call key to place a call.

CAMERA Presets Camera presets define specific camera positions. To activate a preset whilst in a call, simply press and release that number key. Move the camera to the desired position and press and hold a number key for one second to save the current camera position to that number key.

The alphanumerical keypad functions in the same manner as a cellular phone.

Snapshot takes a snapshot of your video during a call.

Presentation key switches to a predefined presentation source. If the Presentation key is held down for one second then the Presentation video sources menu will appear.

Arrow keys are used to navigate in the menus and for moving the camera* when the menu is hidden.

Use Zoom + and – to zoom the camera* in and out.

The Selfview key displays your outgoing video. Press again to turn off.

The Cancel key takes you back one step in the menu system, i.e. to leave a menu undoing any changes. Use Cancel to delete characters in an input field. Press and hold the Cancel key for one second to close the menu.

Use the End Call key to end the current call. You can also use the End Call key to exit a menu, and if you press the End Call key once again the STANDBY menu will be displayed and you can put the system in to STANDBY mode.

Use the Phone Book key to store and recall video contacts for easy placement of calls.

Press Touch tones key when you are in a call and need to dial extension numbers. Toggle between ABC and abc mode by pressing the # key. To switch between letter and 123 mode press the # key for one second. Press the OK/Menu button to exit Touch tones.

* Applies to systems with controllable cameras.

Remote control TRC4

CHANGE VIDEO SOURCE. Select the desired video source (Main Cam, PC, DocCam, DVD, AUX). Press the video source button again to deselect the video source.

MIC OFF turns your microphone on and off.

Press OK/MENU to show the menu and select menu items.

VOLUME + and – adjusts the Codec volume only and not the monitor volume.

LAYOUT key toggles between full screen and different display layouts.

Press the CALL key to place a call.

CAMERA PRESETS Camera presets define specific camera positions. To activate a preset whilst in a call, simply press and release that number key. Move the camera to the desired position and press and hold a number key for one second to save the current camera position to that number key.

The ALPHANUMERICAL KEYPAD functions in the same manner as a cellular phone.

SNAPSHOT takes a snapshot of your video during a call.

PRESET Press Preset + a number to activate a preset.

SERVICES Press the Services button to open the Services menu.

FAR END Pressing Far End turns Far End control on and off.

HELP Press the Help button to open the User Guide menu

PRESENTATION key switches to a predefined presentation source. If the Presentation key is held down for one second then the Presentation video sources menu will appear.

ARROW keys are used to navigate in the menus and for moving the camera* when the menu is hidden.

Use ZOOM + and – to zoom the camera* in and out.

The SELFVIEW key displays your outgoing video. Press again to turn off.

The CANCEL key takes you back one step in the menu system, i.e. to leave a menu undoing any changes. Use CANCEL to delete characters in an input field. Press and hold the CANCEL key for one second to close the menu.

Use the END CALL key to end the current call. You can also use the END CALL key to exit a menu, and if you press the END CALL key once again the STANDBY menu will be displayed and you can put the system in to STANDBY mode.

Use the PHONE BOOK key to store and recall video contacts for easy placement of calls.

Press TOUCH TONES key when you are in a call and need to dial extension numbers. Toggle between ABC and abc mode by pressing the # key. To switch between letter and 123 mode press the # key for one second. Press the OK/MENU button to exit TOUCH TONES.

* Applies to systems with controllable cameras.

The Installation Wizard

The Installation Wizard starts automatically when the video system is installed at the first time and guides you through the basic configuration of the system in the following steps:

1. Welcome page
2. Select Language
3. Enter System Name
4. Enter Software Option Keys
5. Enter IP Settings
   - Obtain IP Address Automatically
   - Static IP Address (address, subnet, gateway)
6. Enter SIP Settings
7. Enter External Management settings
   - On: Enter information for your TMS server (address, path)
   - Off: Select from the list:
     - Gatekeeper and enter the gatekeeper settings
     - Call Manager and enter the call manager settings
     - Direct
8. Finish the wizard. The system will automatically restart the system.

The Installation Wizard can be run any time from the Control Panel menu.

Description of the settings

Each setting is described in The settings library section.

Press The settings library menu button on top of the page to go the settings library, or use the search functionality in the Adobe Acrobat PDF document to make a search for the setting.

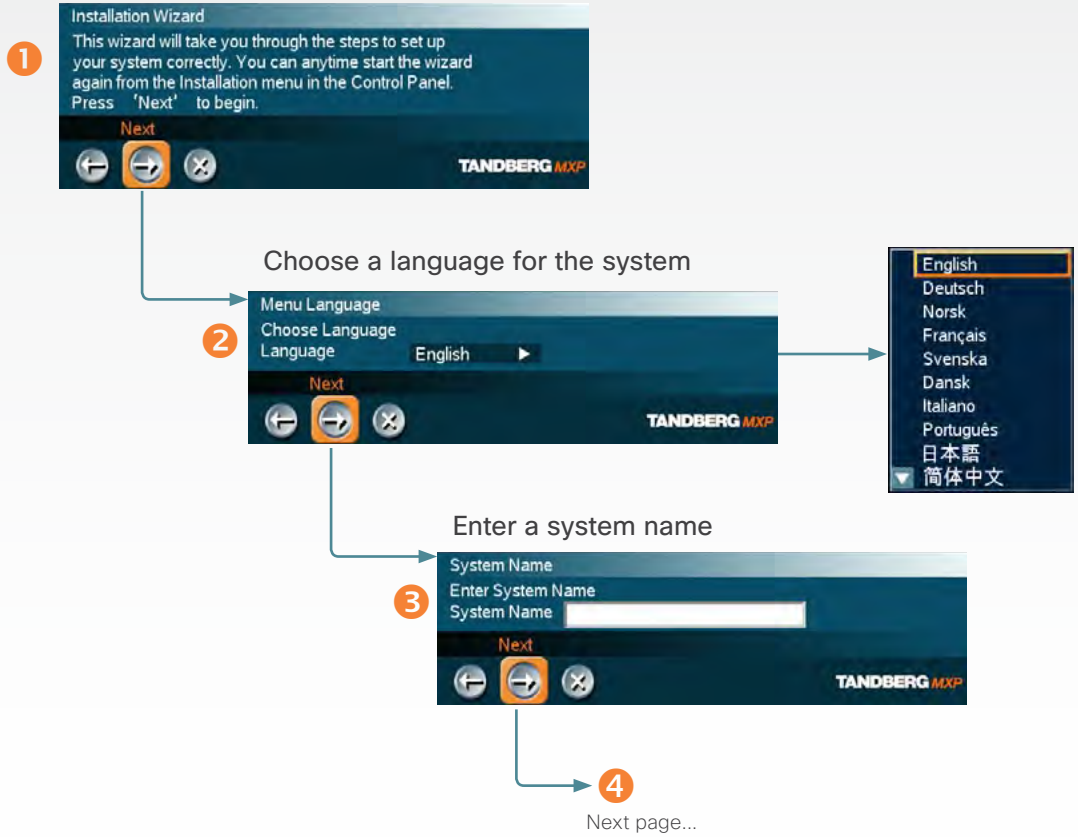

Previous: Step back.

Next: Step forward.

Finish: Save changes and restart the system.

Cancel: Exit without saving any changes.

The Installation Wizard, cont...

Description of the settings

Each setting is described in The settings library.

Press The settings library menu button on top of the page to go the settings library or use the search functionality in the Adobe Acrobat PDF document to make a search for the setting.

Previous: Step back.

Next: Step forward.

Finish: Save changes and restart the system.

Cancel: Exit without saving any changes.

Enter software options

4

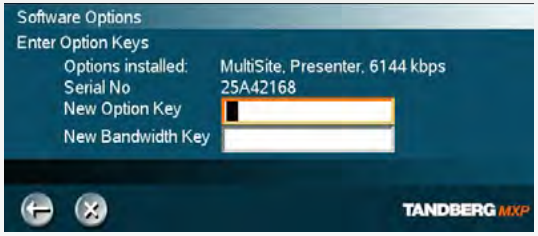

Read more about Software options...

IP settings

5

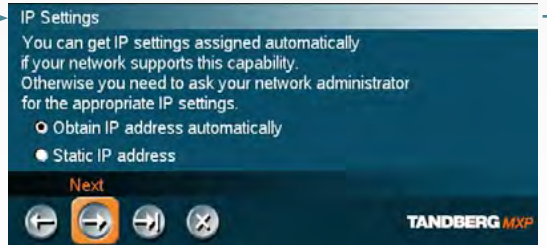

If you need to set a static IP address

6

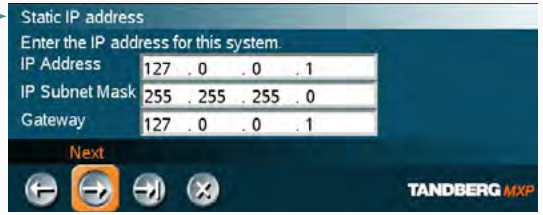

Read more about Static IP address...

SIP Settings

7

Read more about SIP settings...

External management

8

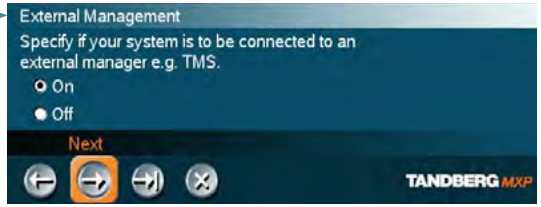

10

Next page...

External manager settings

9

Read more about External manager settings...

13

Next page...

The Installation Wizard, cont...

Previous: Step back.

Next: Step forward.

Finish: Save changes and restart the system.

Cancel: Exit without saving any changes.

Specify how to register your system

10

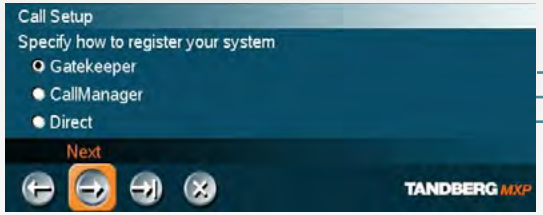

Enter gatekeeper settings

11

Read more about Gatekeeper settings...

- or enter Call manager settings

12

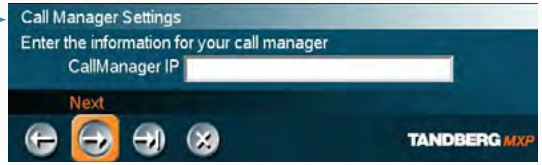

Read more about Call manager settings...

- or select Direct call setup

13

Save and restart

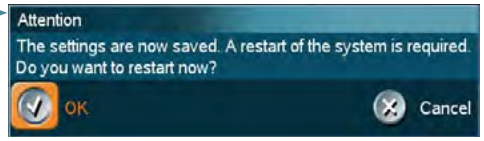

Description of the settings

Each setting is described in The settings library.

Press The settings library menu button on top of the page to go the settings library or use the search functionality in the Adobe Acrobat PDF document to make a search for the setting.

Verify your settings

Press any button on the remote control to wake up the system.
Navigate to the System Information page, as described below, to verify the settings.

In the Call menu, press the Control Panel button.

In the Control Panel menu, press the Diagnostics button.

In the Diagnostics menu, press the System Information button.

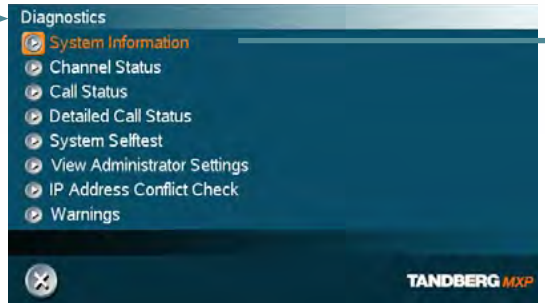

Verify your settings in the System Information page.

Press arrow down/up on the remote to scroll.

Description of the settings

Each setting is described in The settings library.

Press The settings library menu button on top of the page to go the settings library or use the search functionality in the Adobe Acrobat PDF document to make a search for the setting.

Previous: Step back.

Next: Step forward.

Finish: Save changes and restart the system.

Cancel: Exit without saving any changes.

View the default system settings

Press any button on the remote control to wake up the system. Go to the Installation menu and View default settings menu to see a listing of the default system settings.

In the Call menu, press the Control Panel button.

In the Control Panel menu, press the Diagnostics button.

Press arrow down/up on the remote to scroll.

Restore to default system settings

Click on Restore Defaults button to restore to default settings.

Description of the settings

Each setting is described in The settings library.

Press The settings library menu button on top of the page to go the settings library or use the search functionality in the Adobe Acrobat PDF document to make a search for the setting.

Previous: Step back.

Next: Step forward.

Finish: Save changes and restart the system.

Cancel: Exit without saving any changes.

Installation Profiles

You can create installation profiles to easily switch between different sets of configurations for the system.

Configure the system and save the settings in an Installation profile.

Description of the settings

Each setting is described in The settings library.

Press The settings library menu button on top of the page to go the settings library or use the search functionality in the Adobe Acrobat PDF document to make a search for the setting.

Previous: Step back.

Next: Step forward.

Finish: Save changes and restart the system.

Cancel: Exit without saving any changes.

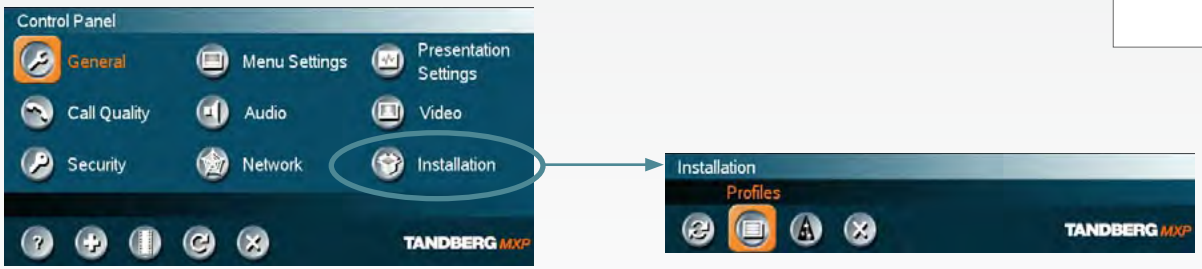

Read more about Installation Profiles...

1 Save Profile

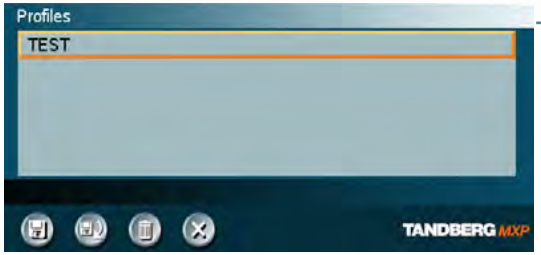

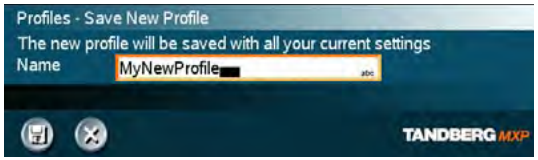

2 Activate Profile

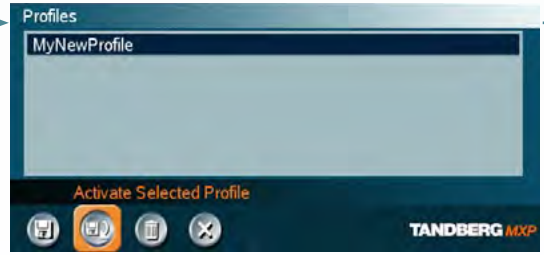

3 Delete Profile

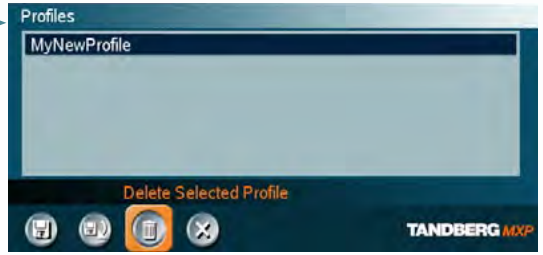

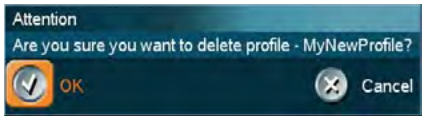

Chapter 3

The Control Panel menu structure

Go to Control Panel menu structure for Codec 6000 MXP.. (page 17)

Go to Control Panel menu structure for Codec 3000 MXP.. (page 40)

Go to Control Panel menu structure for 1700 MXP.. (page 61)

Go to Control Panel menu structure for 1000 MXP.. (page 80)

Go to Control Panel menu structure for Edge 75/95 MXP.. (page 100)

Go to next page..

About the Control Panel

The different parts of the Control Panel are explained on the following pages.

Password Protection

Making changes to the Control Panel Settings will change the behavior of the system. We recommend password protecting the access to the Control Panel Settings to prevent occasional users from making crucial changes to the system. Set an Administrator Password to control the access to these settings.

Remote control shortcut keys

Re-dial: Double click on the green call button on the remote control to start calling the last number.

Standby: Double click on the red end call button on the remote control to set the system into standby.

Show system information: Open the call menu and press the arrow up key once to show the System information page.

Reset menu language: Click on the Phone Book button 5 times and then press the number key 1 to reset the menu language to English.

Open the Control Panel

Press the OK key on the remote control to wake up the system, and to display the Call menu.

In the Call menu, use the arrow keys on the remote control to navigate to the Control Panel button and press the OK key to display the Control Panel.

- Back
- Restart (the system switches itself Off and On again)
- Audio Demo (demonstrates the audio of the system)
- Diagnostics (see the system status and warnings))
- On-line User Guide (open the online user guide).

Each menu item is described in The settings library section.

Control Panel menu structure for Codec 6000 MXP

This guide describes the menu structure for the systems displayed on this page, with all options installed.

Descriptions of each menu item are found in The settings library section.

The Control Panel overview for Codec 6000 MXP

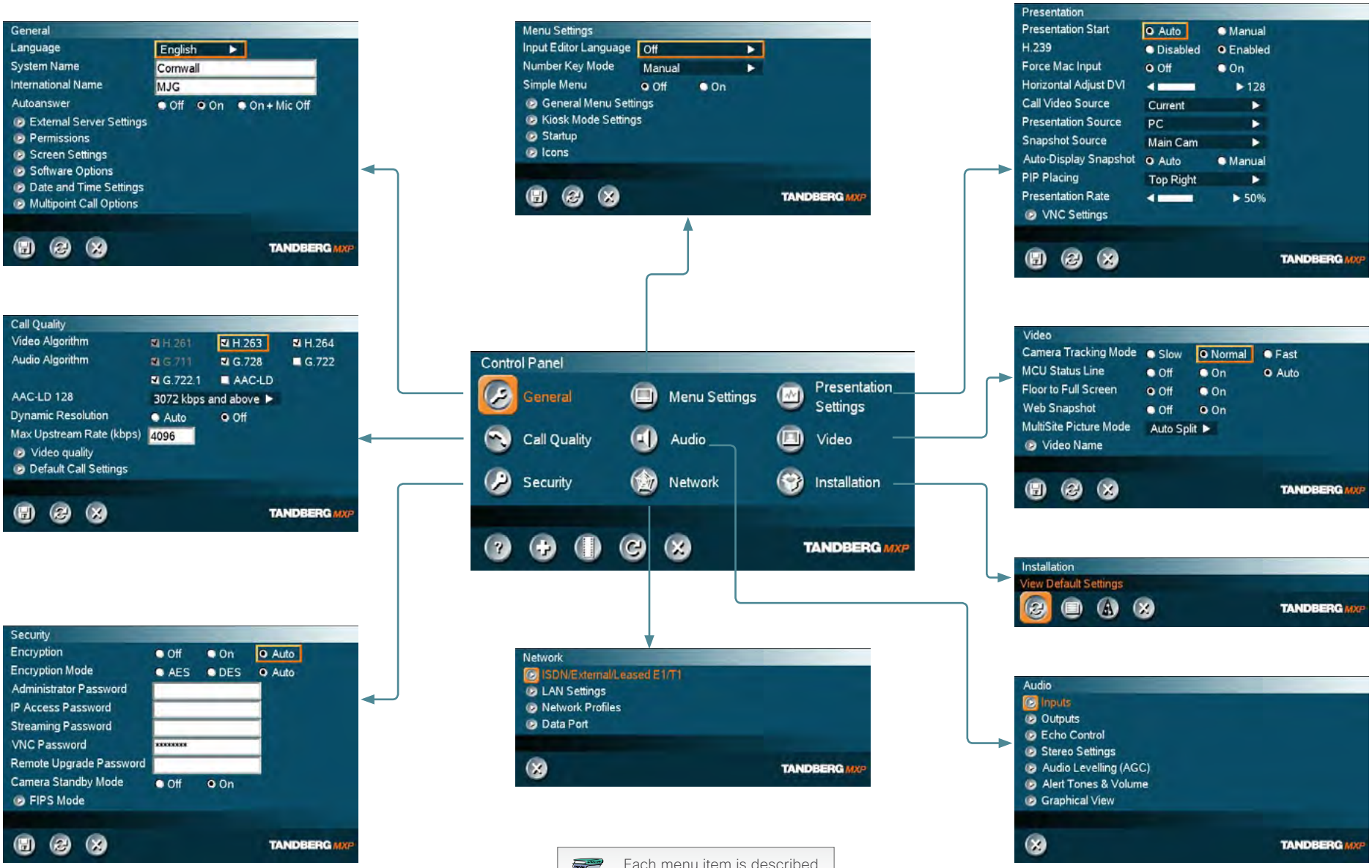

Each menu item is described in The settings library section.

Control Panel menu structure for Codec 3000 MXP

This guide describes the menu structure for the systems displayed on this page, with all options installed.

Descriptions of each menu item are found in The settings library section.

The Control Panel overview for Codec 3000 MXP

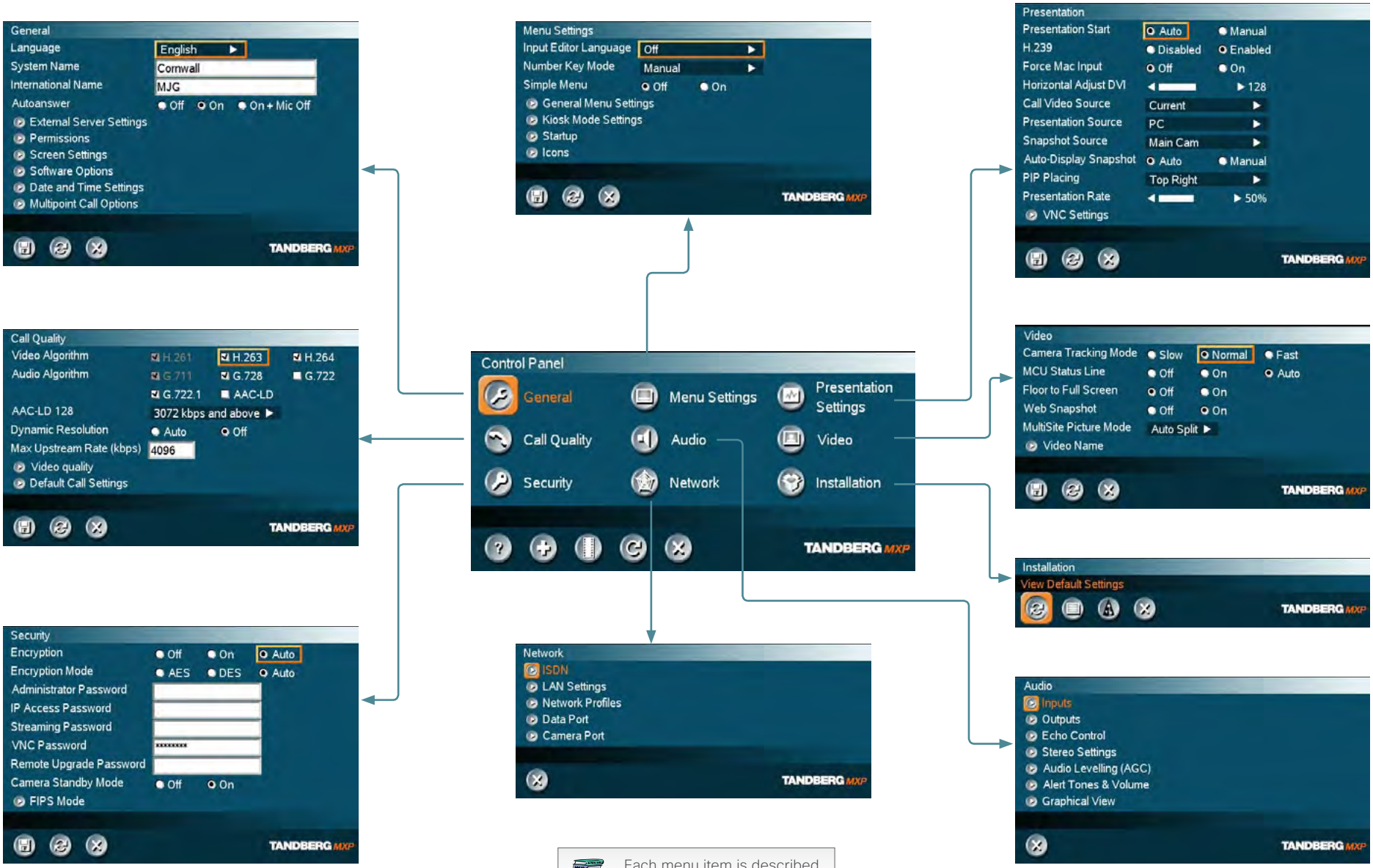

Each menu item is described in The settings library section.

Control Panel menu structure for 1700 MXP

This guide describes the menu structure for the systems displayed on this page, with all options installed.

Descriptions of each menu item are found in The settings library section.

The Control Panel overview for 1700 MXP

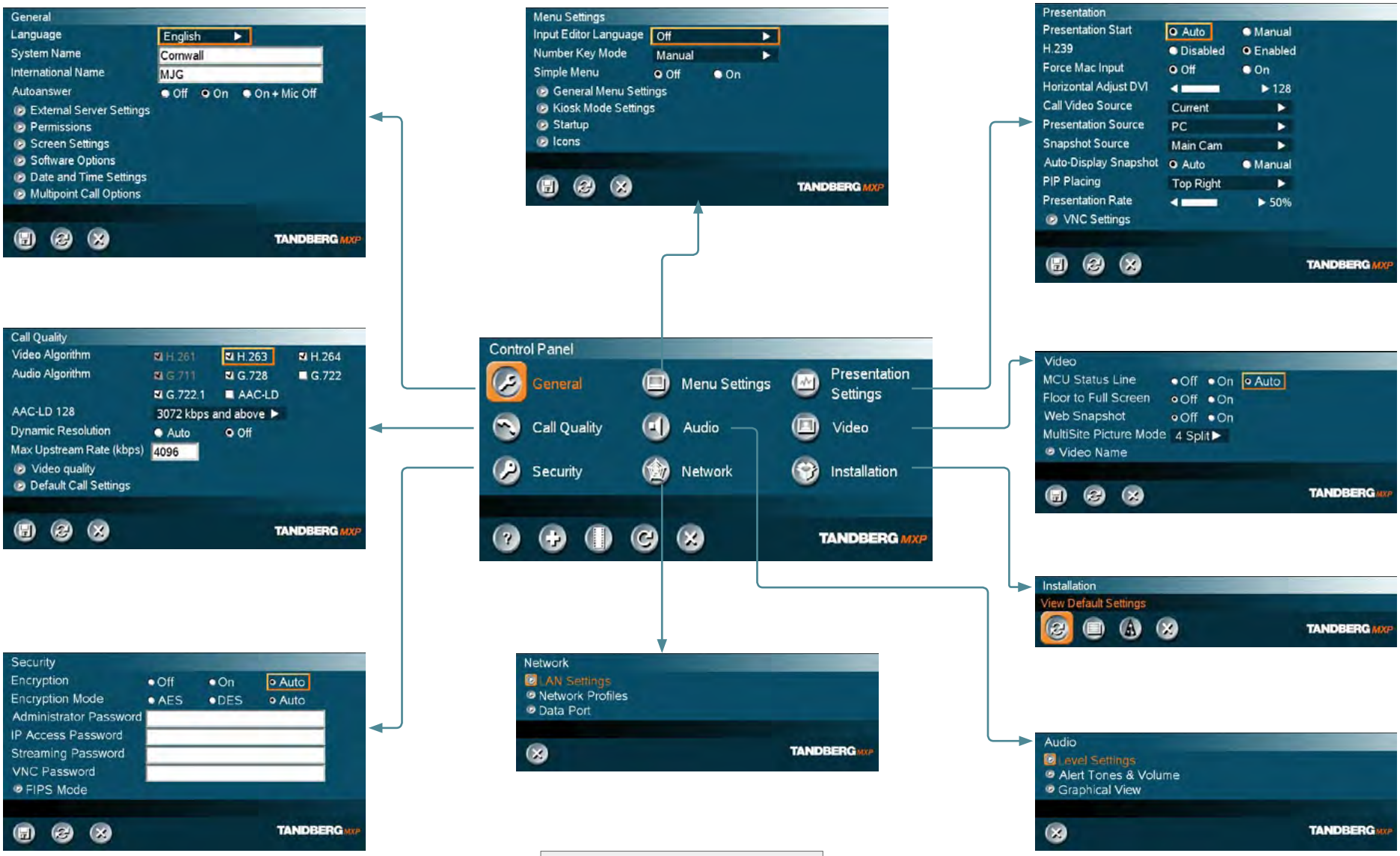

Each menu item is described in The settings library section.

Control Panel menu structure for 1000 MXP

This guide describes the menu structure for the systems displayed on this page, with all options installed.

Descriptions of each menu item are found in The settings library section.

The Control Panel overview for 1000 MXP

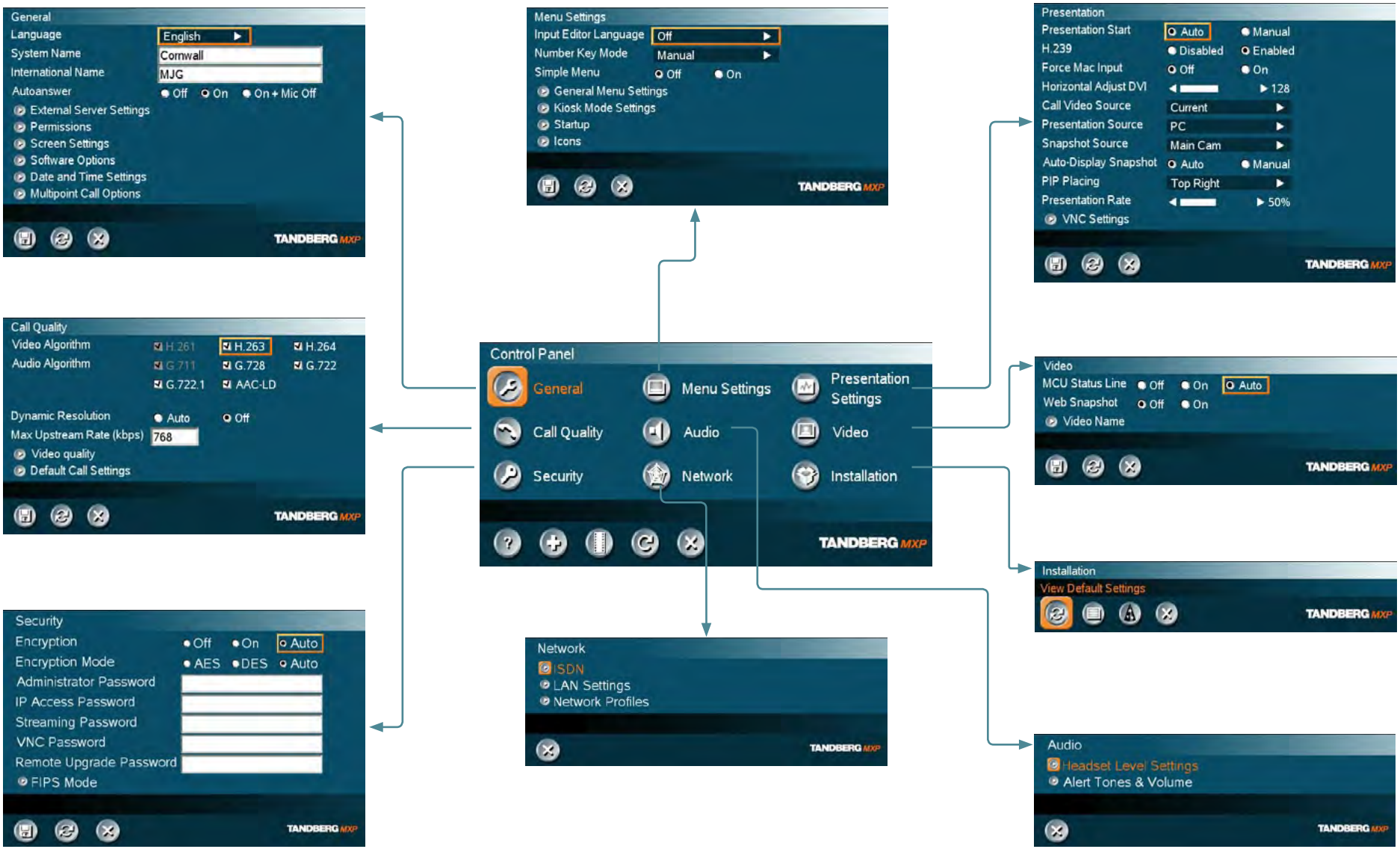

Each menu item is described in The settings library section.

Control Panel menu structure for Edge 75/95 MXP

This guide describes the menu structure for the systems displayed on this page, with all options installed.

Descriptions of each menu item are found in The settings library section.

The Control Panel overview for Edge 75/95 MXP

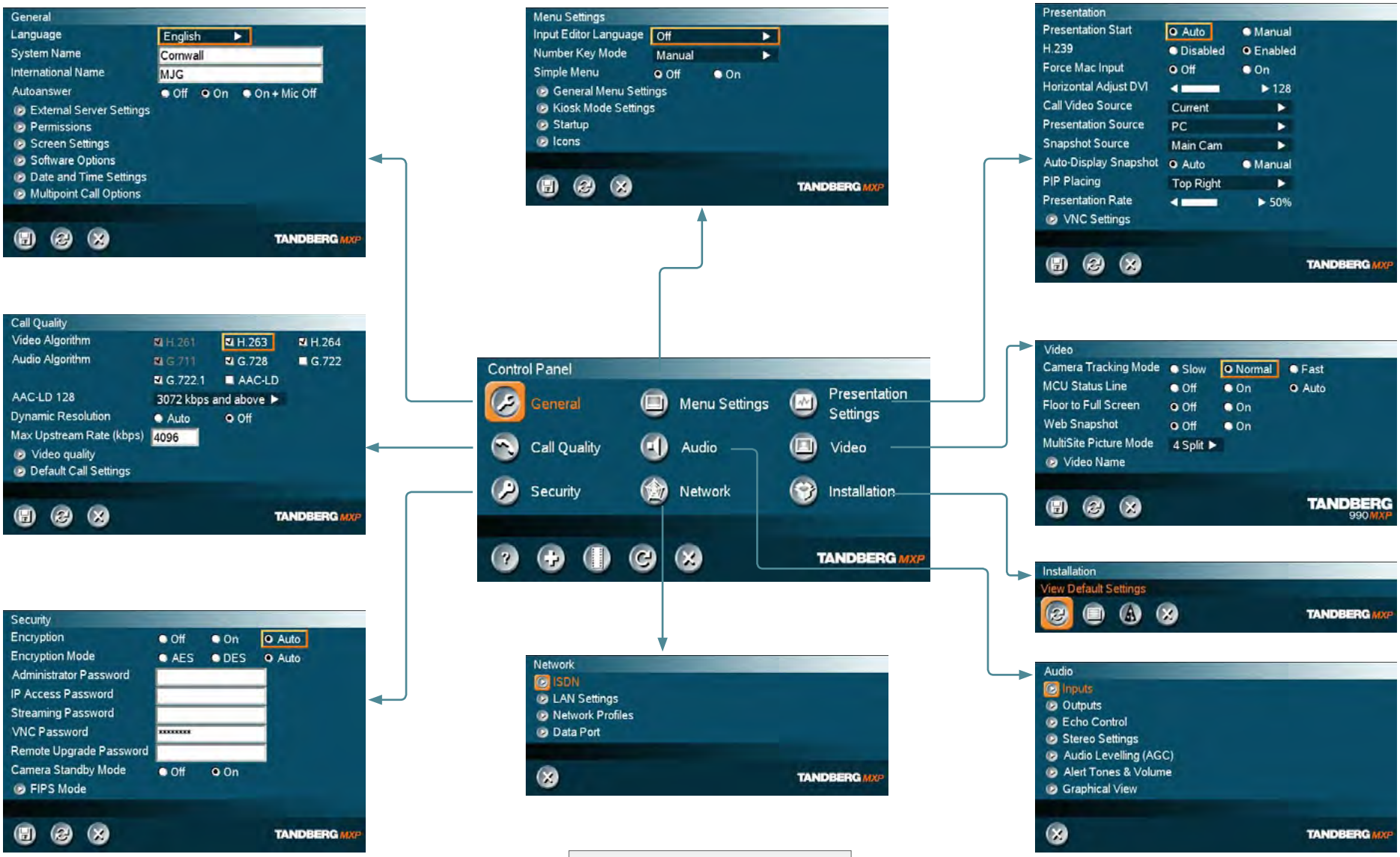

Each menu item is described in The settings library section.

Chapter 4

The Control Panel settings library

The settings library gives an overview of all the Control Panel menu settings for all video systems in the MXP F-series.

The Administrators Guide describes the MXP endpoints (F-series). Be aware that the different video systems can have different settings. Be also aware that some settings requires optional features to be installed and enabled.

The settings are presented in the same order as they appear in the menus. Use the search feature in Adobe Acrobat to look up specific topics or keywords.

In this chapter...

- Description of each setting, listed as they appear in the menus

System settings library

The top menu bar and the entries in the Table of Contents are all hyperlinks, just click on them to go to the topic.

We recommend you visit the TANDBERG web site regularly for an updated version of this guide. Go to: http://www.cisco.com/go/telepresenec/docs

Table of Contents

The Control Panel descriptions

The settings are listed in the same order as they appear in the menus

MENU ADDRESS	SETTINGS DESCRIPTION	INFORMATION	PRODUCT
Control Panel > General >	**LANGUAGE** Set the preferred Language to be used in the menus. Select a Language: English, German, Norwegian, French, Swedish, Danish, Italian, Portuguese, Simplified Chinese, Traditional Chinese, Korean, Russian, Spanish, Arabic, Suomi, Japanese, Thai and Add Language.... LANGUAGE PACKS: When you select Add Language... the system takes you to the Services Menu where language packs are downloaded over the Internet from a central server. This requires that the endpoint is connected to IP and can access the public Internet. Download from web: Language packs can also be downloaded from http://www.tandberg.com/support/download_software.jsp. Download the file from web to the PC and uploaded the file from the PC to the endpoint. Open a web browser and enter the IP address of the video system. Go to Endpoint configuration > Language and browse for the file. Press the Upload button to upload the language file.	TIP! When the Input Editor Language is set to Chinese, Korean, Japanese or Russian you will be able to use the remote control to enter characters in these languages into an input field like the System Name or Phone Book. Read more: Control panel > Menu settings > Input editor language	All
Control Panel > General >	**SYSTEM NAME** Enter a System Name to identify the video system. System Name is blank by default. It can be alphanumeric and up to 50 characters long. If the system name contains Asian and non-Latin character text input, the International Name must be specified as well. Whenever alphanumerical entries are expected by the system, a small ABC or abc or 123 appears in the right lower corner of the entry field. In this mode, entries from the Numerical keypad are automatically interpreted as alphanumeric entries in the same way as on a cellular phone. Using the remote control: ▪ Press the key that corresponds to the required letter. ▪ Press the key as many times as needed to access the correct letter. ▪ Change to lower or back to upper case letters with the # a/A key ▪ Add space with the 0 _ key. ▪ To write numbers in a text input field, keep pressing the corresponding key until the digit appears.	The System Name identifies the system: On the welcome screen of your system During a MCU conference call When using the Web-interface When the codec is acting as an SNMP Agent Towards a DHCP server If a H.323 ID is configured in Gatekeeper Settings then this ID will be displayed instead of the system name. Read more: Control Panel > Network > LAN settings > H.323 settings > Gatekeeper settings	All
Control Panel > General >	**INTERNATIONAL NAME** If the System Name contains Asian and non-standard ASCII character text input (includes even languages like Norwegian, French, Polish etc.), An International Name using standard ASCII characters only, must be specified as well. The purpose is twofold. One is to ensure systems without Unicode or Asian font support will not display gibberish. The second is to enable future functionality for international conferences, with example Chinese and Western participants, so the Chinese see the names in Chinese, while the international participants see names written with Latin letters.	If you set the Language to an Asian language and enter a System Name in e.g. Korean, a second line will appear and allow you to specify the International Name using standard ASCII character set.	All

MENU ADDRESS	SETTINGS DESCRIPTION	INFORMATION	PRODUCT
Control Panel > General >	**AUTOANSWER** The Autoanswer setting determines whether an incoming call is put through automatically or manually. The Autoanswer setting has no effect when the video system is in call (busy). **ON:** The system will automatically answer all incoming calls. **ON + MIC OFF:** The system will automatically answer all incoming calls, but will turn Off the microphone as a security feature. To activate the microphone again, press the Mic Off key on the Remote Control and the Mic Off icon will disappear – indicating that the microphone is turned On. **OFF:** All incoming call must be answered manually by pressing the OK key or the green Call key on the remote control.		All
Control Panel > General > External Server Settings > PHONE BOOK SETTINGS	**CORPORATE DIRECTORY** Your system may be connected to a Directory Service or Management System such as the Cisco TelePresence Management Suite (TMS). The Management System may then provide your video system with a phone book containing a corporate directory. This directory is controlled directly from the TANDBERG Management System (TMS) and updates and changes are carried out remotely by the TMS Administrator. **ON:** The Corporate Directory phone book is available in the menu. **OFF:** The Corporate Directory phone book is unavailable for the users.	**NOTE!** Any contacts that you choose to copy to your local phone book (My Contacts), e.g. for use in your own predefined MultiSite Contacts, will not be updated when the Corporate directory is updated by the Management System Administrator.	All
Control Panel > General > External Server Settings > PHONE BOOK SETTINGS	**ADDRESS** Enter the IP address or the DNS name of the Directory Service that provides the Corporate Directory phone book. Example with IP Address: `10.0.0.1` Example with DNS Name: `tms.eu.company.com`		All
Control Panel > General > External Server Settings > PHONE BOOK SETTINGS	**PATH** Enter the Path to the Corporate Directory phone book of the Directory Service. Example of a path to the phone book at Cisco TelePresence Management Suite (TMS): `tms/public/external/phonebook/phonebookservice.asmx`		All
Control Panel > General > External Server Settings > EXTERNAL SERVICES	**EXTERNAL SERVICES** External Services include any HTTP and HTML based contents your Service Provider may offer. In general this could be stock exchange information, news, weather forecast etc. In this context, External Services may include the ability to display scheduled meetings for the video system. Handy when meetings last longer than scheduled and you need to know if the system is available or booked for another meeting. **ON:** Set this to On when External Services are available. **OFF:** Set this to Off when External Services are unavailable.		All

MENU ADDRESS	SETTINGS DESCRIPTION	INFORMATION	PRODUCT
Control Panel > General > External Server Settings > EXTERNAL SERVICES	**ADDRESS** Enter the IP address or DNS name of the Service Provider Host for External Services. Example with IP Address: `10.0.0.1` Example with DNS Name: `tms.eu.company.com`		All
Control Panel > General > External Server Settings > EXTERNAL SERVICES	**PATH** Enter the Path to the External Services Host. Example of a path to Cisco TelePresence Management Suite (TMS): `tms/public/endpointservice.aspx`		All
Control Panel > General > External Server Settings > EXTERNAL MANAGER	**ADDRESS** Enter the IP address or DNS name of the External Manager, which can be the address of the Cisco TelePresence Management Suite (TMS), Gatekeeper or the Call Manager. Example with IP Address: `10.0.0.2` Example with DNS Name: `tms.eu.company.com`		All
Control Panel > General > External Server Settings > EXTERNAL MANAGER	**PATH** Enter the Path to the External Manager. Example of a path to Cisco TelePresence Management Suite (TMS): `tms/public/external/management/systemmanagementservice.aspx`		All
Control Panel > General > PERMISSIONS	**ACCESS CODE** Using Access Code helps you control the use of the system. To create a list of valid access codes an access code file must be created (`access.txt`). **ON:** When making a call, an Access Code dialogue box will be shown. The user must enter a valid access code in order to place a call. **OFF:** No access code is required to place a call.	The use of Access Codes can help you control the use of the system. When set to On, all users must enter a code to identify themselves when making a call. Access Codes are useful for group systems where there are different users or divisions that share the costs of using the system.	All
Control Panel > General > PERMISSIONS	**ALLOW INCOMING CALLS WHEN IN CALL** **ON:** When set to On and with an ongoing MCU call/conference, the user can accept another incoming call. This will result in the incoming call being added to the MCU conference. **OFF:** The system will not accept incoming calls when you are in a call.	MCU - Multipoint Conference Unit	All
Control Panel > General > PERMISSIONS	**ALLOW INCOMING AUDIO CALLS** **ON:** The system will accept incoming telephone calls. **OFF:** The system will not accept incoming telephone calls.	This feature may be used to prevent incoming calls from systems other than video conferencing systems.	All

MENU ADDRESS	SETTINGS DESCRIPTION	INFORMATION	PRODUCT
Control Panel > General > PERMISSIONS	FAR END CAMERA CONTROL **ON:** The far end will be able to select your video sources, control the camera (pan, tilt, zoom) and request snapshots **OFF:** The far end can access none of the features above on your system. You will however still be able to control your camera, select your video sources and request snapshots.	Lets you control if the other side (far end) should be allowed to select your video sources and request snapshots.	All with controllable camera
Control Panel > General > PERMISSIONS	FALLBACK TO TELEPHONY This feature is only available for ISDN Networks. **ON:** Enables fallback from video calls to telephone calls. **OFF:** Disables fallback.	When fallback is enabled, and the system fails to place a video call it will attempt to place a telephone call to the same number instead.	All with ISDN
Control Panel > General > PERMISSIONS	FAR END ISDN SYSTEM UPGRADE **ON:** The system will allow a remote system to upgrade local software. **OFF:** The system will not allow a remote system to upgrade local software. The remote software upgrade configuration can also be done via Telnet or the serial port: `xConfiguration RemoteSwUpgrade Mode: <On/Off>`	It is possible to upgrade software remotely, i.e. a far end system may upgrade software on a local system via HTTP on ISDN*. The system to be upgraded must be configured to allow remote software upgrade. A Remote Upgrade Password can be set to control the far end system to accomplish the software upgrade. * Applies to systems with ISDN capabilities, e.g. this setting does not apply to TANDBERG 1700 MXP.	All with ISDN
Control Panel > General > PERMISSIONS	MAXIMUM CALL LENGTH Enter Maximum Call Length. Enter a value between 0-999 minutes: Value = 0: Enter the value 0 to disable the Maximum Call Length. Value = 1-999: Enter a value between 1-999 to enable Maximum Call Length.	This feature will automatically end both incoming and outgoing calls when the call time exceeds the specified Maximum Call Length in minutes.	All
Control Panel > General > SCREEN SETTINGS	PICTURE LAYOUT **PICTURE IN PICTURE (PIP):** When you have selected PIP and you press the Layout button on the remote control, this will result in an extra picture in smaller view (Picture in Picture). Press the Layout button to move it around in the corners of the screen and finally hide it. **PICTURE OUTSIDE PICTURE (POP):** When you have selected POP and you press the Layout button on the remote control, you can see the images side-by-side, e.g. 1+1 layout, where the far end and near end are displayed as images of equal size. Press again to see a 1+2 layout and a 1+3 layout and finally back to full screen.	The Picture Layout is related to the Layout button on the remote control and it can be used at any time to change the screen layout. For wide screen systems POP mode is recommended. You will get optimized picture layouts for wide screen by pressing the Layout button on the remote control. **TIP!** Press and hold the Layout key on the remote control for one second to hide the small picture directly from any position.	All
Control Panel > General > SCREEN SETTINGS	AUTO LAYOUT **ON:** When set to On the system will change layouts automatically depending on the number of participants in a call and if you have a dual stream or not. **OFF:** When set to Off there will be no automatic layout changes during a call. All desired layout changes must be done manually with the Layout button on the remote control.	**NOTE!** When receiving low resolution images (176 × 144 pixels or less) the screen will automatically adjust to a smaller view to give optimum quality experience. The resolution 176 x 144 pixels is also known as QCIF.	All

MENU ADDRESS	SETTINGS DESCRIPTION	INFORMATION	PRODUCT
Control Panel > General > SCREEN SETTINGS	**USE SCREEN AS LOCAL PC MONITOR** When the Use Screen as Local PC Monitor is set to On you can use the Selfview button of the remote control to switch from local PC display to standard conference layout. **ON:** When set to On (and the local PC display is turned On) you will be able to have the local PC image displayed on the screen, both outside and within a call, without transmitting the PC image to the other side. **OFF:** When set to Off you will not be able to see the Local PC image.	**TIP!** When Use Screen as Local PC Monitor is set to On you can set the Welcome Menu to Off. This will avoid the Welcome menu to automatically appear on screen. Press the OK button on the remote control to see the Welcome menu.	All
Control Panel > General > SCREEN SETTINGS	**PC PICTURE FORMAT** For wide screen monitors only. Takes effect only when VGA Monitor Format or TV Monitor Format is set to Wide. Use this setting to determine if you want your PC presentations to be shown stretched in full screen, or with correct aspect ratio using part of the wide screen display. With the VGA Out Quality set to Auto the presentation will be of the best possible quality supported by the monitor. **NORMAL:** VGA output will have 4:3 aspect ratio on wide screen monitor. **WIDE:** VGA output will utilize the wide screen monitor at full with 16:9 aspect ratio.	How to set VGA Out Quality for Wide XGA Set VGA Monitor Format to Wide Set PC Picture Format to Normal Set VGA Out Quality to Auto If the layout on the monitor is either full screen or Picture Outside Picture (POP) and if the input source to the largest window is PC with resolution 1024x768, then the system will use WXGA (1280x768) instead of XGA, when the monitor supports this.	All which supports wide screen
Control Panel > General > SCREEN SETTINGS	**DUAL MONITOR** Cisco systems can be used with 1-2 monitors. If two monitors are used make sure that Dual Monitor is set to On. **ON:** Selfview, snapshots and Dual Stream will be displayed on the second monitor. **OFF:** The second monitor shows selfview only.	Virtual Monitors The TANDBERG 6000 MXP codec can support 4 (four) monitors through Virtual Monitor. The TANDBERG 3000 MXP codec can handle 3 (three) monitors through Virtual Monitor. For more information on this see the MXP System Integrators Guide, which can be downloaded from our web site.	All wchich supports dual screen
Control Panel > General > SCREEN SETTINGS	**MULTISITE 3 PARTY LAYOUT** **NOTE:** Only available when Dual Monitor is set to On. With Multisite 3 Party Layout setting you can, on the endpoint hosting the meeting, display party B and C on one monitor each. This requires that the host endpoint to be configured as a dual monitor system. This layout applies to the Multisite host and to a meeting with 3 participants only. Other layouts can still be used. **ON:** Site B and C is presented on separate monitors on the host, if the endpoint is a dual monitor system. **OFF:** Normal Multisite layout		
Control Panel > General > Screen Settings > ASPECT RATIO	**ASPECT RATIO TV 1** **CLIP:** Adjust the source by clipping it, to match the aspect ratio of the destination window. **LETTERBOX:** Adjust the source by adding black bars, to match the aspect ratio of the destination window. **FILL:** Stretch/shrink the source to fill the destination window. The aspect ratio of the source does not match the destination. **AUTO:** Automatically make the best choice by combining Clip, Fill and Letter box when necessary.		

MENU ADDRESS	SETTINGS DESCRIPTION	INFORMATION	PRODUCT
Control Panel > General > Screen Settings > ASPECT RATIO	ASPECT RATIO TV 2 **CLIP:** Adjust the source by clipping it, to match the aspect ratio of the destination window. **LETTERBOX:** Adjust the source by adding black bars, to match the aspect ratio of the destination window. **FILL:** Stretch/shrink the source to fill the destination window. The aspect ratio of the source does not match the destination. **AUTO:** Automatically make the best choice by combining Clip, Fill and Letter box when necessary.		
Control Panel > General > Screen Settings > ASPECT RATIO	ASPECT RATIO DVI 1 **CLIP:** Adjust the source by clipping it, to match the aspect ratio of the destination window. **LETTERBOX:** Adjust the source by adding black bars, to match the aspect ratio of the destination window. **FILL:** Stretch/shrink the source to fill the destination window. The aspect ratio of the source does not match the destination. **AUTO:** Automatically make the best choice by combining Clip, Fill and Letter box when necessary.		
Control Panel > General > Screen Settings > ASPECT RATIO	ASPECT RATIO DVI 2 **CLIP:** Adjust the source by clipping it, to match the aspect ratio of the destination window. **LETTERBOX:** Adjust the source by adding black bars, to match the aspect ratio of the destination window. **FILL:** Stretch/shrink the source to fill the destination window. The aspect ratio of the source does not match the destination. **AUTO:** Automatically make the best choice by combining Clip, Fill and Letter box when necessary.		
Control Panel > General > SCREEN SETTINGS	MONITOR BRIGHTNESS 1700 MXP: Use the arrow keys to adjust the Monitor Brightness level (Value: 0 - 7) 3000 MXP Profile: Use the arrow keys to adjust the Monitor Brightness level (Value: 0 - 100)	This setting applies to 1700 MXP This setting applies to 3000 MXP Profile shipped without a separate remote control for the monitor.	See comment
Control Panel > General > SCREEN SETTINGS	MONITOR CONTRAST 1700 MXP: Use the arrow keys to adjust the Monitor Contrast level (Value: 0 - 15) 3000 MXP Profile: Use the arrow keys to adjust the Monitor Contrast level (Value: 0 - 100)	This setting applies to 1700 MXP This setting applies to 3000 MXP Profile shipped without a separate remote control for the monitor.	See comment
Control Panel > General > SCREEN SETTINGS	MONITOR COLOR 3000 MXP Profile: Use the arrow keys to adjust the Monitor Color level (Value: 0 - 4)	This setting applies to 3000 MXP Profile shipped without a separate remote control for the monitor.	See comment
Control Panel > General > SCREEN SETTINGS	MONITOR COLOR R 1700 MXP: Use the arrow keys to adjust the Monitor Color Red (Value: 0 - 255)	This setting applies to 1700 MXP	See comment

MENU ADDRESS	SETTINGS DESCRIPTION	INFORMATION	PRODUCT
Control Panel > General > SCREEN SETTINGS	MONITOR COLOR G 1700 MXP: Use the arrow keys to adjust the Monitor Color Green (Value: 0 - 255)	This setting applies to 1700 MXP	See comment
Control Panel > General > SCREEN SETTINGS	MONITOR COLOR B 1700 MXP: Use the arrow keys to adjust the Monitor Color Blue (Value: 0 - 255)	This setting applies to 1700 MXP	See comment
Control Panel > General > Screen Settings > VIDEO OUT	TV SINGLE Applies to Video Out 1 (S-video) and Video Out 3 (composite). **OFF:** The TV Single output is Off. **ON:** The TV Single output is On.		6000
Control Panel > General > Screen Settings > VIDEO OUT	TV DUAL Applies to Video Out 2 (S-video) and Video Out 4 (composite). **OFF:** The TV Dual output is Off. **ON:** The TV Dual output is On.		6000
Control Panel > General > Screen Settings > VIDEO OUT	VGA DUAL Applies to the second DVI output. **OFF:** The VGA Dual output is Off. **ON:** The VGA Dual output is On.	6000 MXP: DVI output is marked DUAL 3000 MXP, 990/880/770 MXP: the DVI-I out has no label as the menu setting on these systems allows the DVI-I out to be either single or dual output.	6000
Control Panel > General > Screen Settings > VIDEO OUT	TV MONITOR FORMAT For wide screen monitors only. **NORMAL:** Output is optimized for normal TV monitors (4:3) **WIDE:** Output is optimized for wide TV monitors (16:9). To fully leverage your wide screen display, activate the Native 16:9 format by setting the TV Monitor Format to Wide.	**NOTE:** You should only change this setting if your TV monitor is a wide screen (16:9) monitor or projector. All composite- and S-video output formats will then be optimized for Wide Screen TV monitors. **NOTE!** If both TV Monitor Format and VGA Monitor Format are set to Normal, the system will skip the 1+3 layout, which is not beneficial for 4:3 monitors.	All which supports wide screen

MENU ADDRESS	SETTINGS DESCRIPTION	INFORMATION	PRODUCT
Control Panel > General > Screen Settings > VIDEO OUT	**VGA MONITOR FORMAT** For wide screen monitors only. You should only change this setting if your VGA monitor is a wide screen (16:9) monitor or projector. The VGA and DVI output will then be optimized for Wide Screen VGA and High Definition (HD) display. **NORMAL:** Output is optimized for normal VGA monitors (4:3) **WIDE:** Output is optimized for wide VGA monitors (16:9). To fully leverage your wide screen display, set the VGA Monitor Format to Wide.	How to set VGA Out Quality for Wide XGA Set VGA Monitor Format to Wide Set PC Picture Format to Normal Set VGA Out Quality to Auto If the layout on the monitor is either full screen or Picture Outside Picture (POP) and if the input source to the largest window is PC with resolution 1024x768, then the system will use WXGA (1280x768) instead of XGA, when the monitor supports this. **NOTE!** If both TV Monitor Format and VGA Monitor Format are set to Normal, the system will skip the 1+3 layout, which is not beneficial for 4:3 monitors.	All which supports wide screen
Control Panel > General > Screen Settings > VIDEO OUT	**VGA OUT MODE** VGA Out Mode makes it possible to specify which signal to send to VGA/DVI output. **MAIN:** Select Main when you want to use a VGA monitor as your main monitor. **DUAL:** Select Dual when you want to use a VGA monitor as your dual monitor		3000 95/75
Control Panel > General > Screen Settings > VIDEO OUT	**VGA OUT QUALITY SINGLE** VGA Out Quality enables the user to change the preferred format for the DVI/VGA output. It is recommended to keep this setting in Auto unless your screen doesn't support some of the XGA or SVGA formats the system is using. **AUTO:** The VGA output format will be optimized depending on video source format, refresh rate and EDID information available. Supported formats are: **SVGA** (800x600) 75 Hz **XGA** (1024x768) 60Hz /75 Hz **WXGA** (1280x768) 60 Hz **W720P** (if Allow HD720P is set to On) **SVGA 800X600:** The VGA output format is forced to SVGA format (800x600) 75 Hz **XGA 1024X768:** The VGA output format is forced to XGA format (1024x768) 60 Hz **W720P:** The VGA output format is forced to w720p	The VGA Out port supports VESA Power Management. If the system is used together with a non TANDBERG supplied monitor, WXGA will have to be enabled on the dataport as well. If Allow HD720p is set to On the w720p resolution is added as a possible resolution for the VGA Out Auto setting.	6000 3000 1700 95/75
Control Panel > General > Screen Settings > VIDEO OUT	**VGA OUT QUALITY DUAL** **AUTO:** The VGA output format will be optimized depending on video source format, refresh rate and EDID information available. Supported formats are: **SVGA** (800x600) 75 Hz **XGA** (1024x768) 60Hz /75 Hz **WXGA** (1280x768) 60 Hz **W720P** **SVGA 800X600:** The VGA output format is forced to SVGA format (800x600) 75 Hz **XGA 1024X768:** The VGA output format is forced to XGA format (1024x768) 60 Hz **W720P:** The VGA output format is forced to w720p	The supported range of VGA formats will be optimized for the VGA display monitor based on the source image. VGA Out Quality Dual enables the user to change the preferred format for the DVI/VGA output. It is recommended to keep this setting in Auto unless your screen doesn't support some of the XGA or SVGA formats the system is using. Note that the VGA Out port supports VESA Power Management.	6000 1700

MENU ADDRESS	SETTINGS DESCRIPTION	INFORMATION	PRODUCT
Control Panel > General > SOFTWARE OPTIONS	**OPTIONS INSTALLED** This section shows you which options are currently installed on your system. To activate a new option, you must have a valid option key. NOTE: After entering the new option key you must restart the system to activate the new option. The following options are available: ▪ No option ▪ Presenter ▪ MultiSite + Presenter ▪ Bandwidth options	MultiSite: The TANDBERG MultiSite feature (using an embedded MCU) enables you to setup multipoint calls with three or more participants - by video and/or telephone. Presenter: The TANDBERG Natural Presenter Package (NPP) allows you to bring your presentations to life using PCs, document cameras and video (also mentioned as dual stream). Bandwidth decides the quality of the video call. High bandwidth gives high quality.	All
Control Panel > General > SOFTWARE OPTIONS	**SERIAL NO** Shows the serial number of the video system. The Serial Number format is xx.xxxxx or xxAxxxxx.	The Serial Number is also found on a sticker on the system. It is essential for identifying the system when it comes to service contracts or other support activities.	All
Control Panel > General > SOFTWARE OPTIONS	**CURRENT OPTION KEY** Shows the current option key.		All
Control Panel > General > SOFTWARE OPTIONS	**CURRENT BANDWIDTH KEY** Shows the current bandwidth key.		All
Control Panel > General > SOFTWARE OPTIONS	**NEW OPTION KEY** To activate a new option, enter the new option key and restart the system. If the key is invalid, the original key will be used.	Please contact your TANDBERG representative to order a new option.	All
Control Panel > General > SOFTWARE OPTIONS	**NEW BANDWIDTH KEY** To activate a new bandwidth, enter the new bandwidth key and restart the system. If the key is invalid, the original key will be used.	Please contact your TANDBERG representative to order additional bandwidth.	All
Control Panel > General > DATE & TIME SETTINGS	**TIME ZONE** Displays the current time and date. Select the correct time zone for the location of your system. ▪ GMT -01:00 to GMT -12:00 ▪ GMT Greenwich Mean Time ▪ GMT +01:00 to GMT +14:00	GMT - Greenwich Mean Time	All
Control Panel > General > DATE & TIME SETTINGS	**DATE FORMAT** Choose between DD/MM/YY, MM/DD/YY, or YY/MM/DD as the preferred date format.		All

MENU ADDRESS	SETTINGS DESCRIPTION	INFORMATION	PRODUCT
Control Panel > General > DATE & TIME SETTINGS	**TIME FORMAT** Select 12h or 24h time format.		All
Control Panel > General > DATE & TIME SETTINGS	**DAYLIGHT SAVINGS** **ON:** Moves the time one hour ahead. **OFF:** Moves the time one hour back.		All
Control Panel > General > MULTIPOINT CALL OPTIONS	**MULTIPOINT CALL SETTINGS** You can make multipoint calls using the built-in MultiSite* on your system, or by using the external Multiway™** solution. **DISABLE MULTIPOINT CALLS:** When Disable Multipoint Calls is selected, this means you have no MultiSite or MultiWay possibilities. You can still add another call. The ongoing call will be put On Hold and you can Swap between the two calls. Only one call can be put on hold at the time. **USE BUILT-IN MULTISITE**: The TANDBERG MultiSite (using a built-in MCU) enables you to setup a multipoint call - by video and/or telephone. MultiSite is an optional feature. **USE EXTERNAL MULTIWAY**: The TANDBERG Multiway (using an external MCU) enables you to setup a multipoint call - by video and/or telephone. Multiway is available through a Gatekeeper and an external MCU. All participants can invite another participant into the conference. Multiway is not supported when Kiosk Mode is set to On. **MULTIWAY URI**: When Use external Multiway is enabled you must enter the Multiway URI. For calling Multiway on SIP the SIP prefix must be added to the URI for the endpoint who initiates the Multiway call. Example of an URI: `firstname.lastname@company.com` Example of an URI with SIP prefix: sip:`firstname.lastname@company.com`	MCU is short for Multipoint Conference Unit, a device used to connect multiple audio and video sites in one or more IP, ISDN and mixed IP & ISDN video meetings. Encryption There can not be a mix of encrypted and non-encrypted calls in a Multiway call. Either all participants must be encrypted or all must be non-encrypted. * MultiSite is available on systems with the optional MultiSite feature supported and installed. ** Multiway is available on systems with a Gatekeeper and an external MCU configured for using Multiway.	All
Control Panel > Menu Settings >	**INPUT EDITOR LANGUAGE** **CUSTOM:** When the Input Editor Language is set to Chinese, Korean, Japanese or Russian the user will be able to enter Chinese/Korean/Japanese/Russian characters into an input field like the System Name or Phone Book, using the remote control. **OFF:** When set to Off the user will only be able to enter ASCII characters into an input field like the System Name or Phone Book, using the remote control.		All

MENU ADDRESS	SETTINGS DESCRIPTION	INFORMATION	PRODUCT
Control Panel > Menu Settings >	**NUMBER KEY MODE** **MANUAL:** This will enable a pop-up menu allowing you to choose what to happen when you press a number key while in a call. Depending of the options installed and whether or not you have any stored camera presets, you might be given up to three choices: Add Another Call, Touch Tones Mode and Use Presets. ▪ If you do not have MultiSite or all of your MultiSite capacity is used, the Add another Call option is not present in the dialog box. ▪ If you have no stored presets the Presets option is not present in the dialog box. ▪ If no Multisite and no stored Presets, then you go directly to Touch Tones mode because no other options are available. If you want the system to act automatically you can configure the system to always: **ADD ANOTHER CALL:** While in a call, the Call menu will automatically appear when a number key is pressed on the remote control. This enables the user to add another call. **TOUCH TONES MODE:** While in a call, the Touch Tones mode (DTMF) will automatically become active when a number key is pressed on the remote control. This enables the user to dial an extension number, password or access code. You can also press the Touch Tones key on the remote control to enter an extension number, password or access code while in a call. **USE PRESETS:** While in a call, the camera Presets Mode will automatically become active when a number key is pressed on the remote control. The camera will move to the position preset for the number key used. Note: This applies to systems with controllable camera only.	When pressing a number key on the remote control, while you are in a call, the system can be configured to act automatically or manually.	All
Control Panel > Menu Settings >	**SIMPLE MENU** **ON:** Enables Simple Menu mode with some of the buttons hidden. The menus affected and the visible buttons are: ▪ Make a Call - Make a Call (green), Standby (red), Presentation, Control Panel and Back. ▪ Presentation - PC and Back. ▪ Control Panel - Diagnostics, Restart, Administrator Settings and Back. ▪ Control Panel (Administrator Settings) - Diagnostics, Restart and Back **OFF:** Enables normal menu mode.		All
Control Panel > Menu Settings > GENERAL MENU SETTINGS	**MENU TIMEOUT IN CALL** **ON:** The menu will disappear automatically after 15 seconds if there is no activity on the remote control. Menu timeout applies when you are in a call only. Outside a call, there is no menu timeout. **OFF:** The menu will not disappear automatically. Press Cancel on the remote control to hide the main menu manually.	The Main menu appears on the bottom line of the screen.	All
Control Panel > Menu Settings > GENERAL MENU SETTINGS	**SHOW CALL DURATION** **ON:** While in a call, the call duration (hh:mm:ss) is shown in the bottom right corner of the screen. **OFF:** No call duration is shown on screen while in a call.		All

MENU ADDRESS	SETTINGS DESCRIPTION	INFORMATION	PRODUCT
Control Panel > Menu Settings > GENERAL MENU SETTINGS	**MENU ON TV** This setting allows you to decide whether or not the menu will be displayed on the TV screen (the PAL/NTSC S-video and composite outputs). For optimal layout of the menu, Menu on TV should be Off if Menu on PC is On and vice versa. **ON:** The menu is available on the TV screen. **OFF:** The menu is not available on the TV screen.	What to do if the menu has disappeared If the Menu has disappeared from the connected TV screen, and only one of them is connected to the system, you can use the remote control and press the Phone Book key 5 times and then the 2 key once, in order to display the menu on the connected screen.	6000 3000 95/75
Control Panel > Menu Settings > GENERAL MENU SETTINGS	**MENU ON PC** This setting allows you to decide whether or not the menu will be displayed on the PC screen (VGA screen with DVI-I outputs). For optimal layout of the menu, Menu on PC should be Off if Menu on TV is On and vice versa. **ON:** The menu is available on the PC screen. **OFF:** The menu is not available on the PC screen.	What to do if the menu has disappeared If the Menu has disappeared from the connected PC screen, and only one of them is connected to the system, you can use the remote control and press the Phone Book key 5 times and then the 2 key once, in order to display the menu on the connected screen.	6000 3000 95/75
Control Panel > Menu Settings > GENERAL MENU SETTINGS	**BALLOON HELP** Used to enable/disable the balloon help window on screen. **ON:** Enables help text windows to appear. **OFF:** There will be no help text window.		All
Control Panel > Menu Settings > KIOSK MODE SETTINGS	**KIOSK MODE** **TAKE CARE!** Functionality will be heavily restricted in Kiosk Mode! In Kiosk Mode the system is set to a simplified state where it can be controlled just with the four Arrow keys and OK key on the remote control. You will get a simplified on-screen menu with only the basic functionality available: ▪ Make call (predefined contacts in phone book only) ▪ Receive call ▪ End call ▪ Adjust volume **ON:** Select On to activate Kiosk Mode. **OFF:** Select Off to not activate Kiosk Mode (default). If Kiosk mode is On and you want to deactivate Kiosk mode, the deactivation can take place through: ▪ the system's web interface ▪ telnet ▪ data port ▪ by a short key combination (requires Allow use of Remote Control set to On)	When in a call in kiosk mode When in a call, the system will display Far End video in full screen. If Maximum Call Length is set to a value and the system is in a call, the system will display a warning when there are 5 minutes, 1 minute and 10 seconds left of the call. If pressing OK on the remote control when in a call, the following choices will be displayed: End Call, Volume and Close. How to deactivate Kiosk Mode Using the web interface, telnet or data port with the command: `xConfiguration Kiosk Mode: <On/Off>` Using a short key combination. Please observe that this requires Allow Use of Remote Control set to On. Press the Phone Book button 5 times and the number 3 key once on the remote control. For more information on API commands this see the MXP System Integrators Guide, which can be downloaded from our web site: http://www.tandberg.com/docs.	All

MENU ADDRESS	SETTINGS DESCRIPTION	INFORMATION	PRODUCT
Control Panel > Menu Settings > KIOSK MODE SETTINGS	**LANGUAGE MENU** When used in Kiosk Mode you may set the system to prompt the user to select language before proceeding. **ON:** When set to On the system will display the language menu as the first menu in Kiosk mode. **OFF:** When set to Off the system will display the welcome menu in English (default).		All
Control Panel > Menu Settings > KIOSK MODE SETTINGS	**AVAILABLE LANGUAGES** In Kiosk Mode the system supports 7 languages for its simplified on-screen menu; English, German, French, Italian, Norwegian, Swedish and Spanish. Select the preferred language(s).		All
Control Panel > Menu Settings > KIOSK MODE SETTINGS	**AUTO DIAL** Applies to systems with handset only. **ON:** The system will automatically dial to the first contact in the Phone Book when the handset is lifted. If this contact is busy, the system will call the second number in the Phone Book and so on. If the user places the handset in the cradle, the system will switch to Speaker Mode. Only the Far End system can end the call. **OFF:** The system will not make a call automatically when the handset is lifted.		Compass Utility
Control Panel > Menu Settings > KIOSK MODE SETTINGS	**ALLOW USE OF REMOTE CONTROL** **ON:** All keys on the remote control are enabled. **OFF:** All keys except the arrow keys and OK key are disabled.		All
Control Panel > Menu Settings > KIOSK MODE SETTINGS	**ONE CLICK CONNECT** **ON:** When turned On, you can make a call with a single click on the green call button on the remote control. The system will call the first entry in “My Contacts” in the Phone Book. NOTE: This functionality will only work in Kiosk Mode **OFF:** Does not allow for one click connect.		
Control Panel > Menu Settings > KIOSK MODE SETTINGS	**PHONE BOOK** Your system may be connected to a Directory Service or Management System such as the Cisco TelePresence Management Suite (TMS). The Management System may then provide your video system with a phone book containing a corporate directory. This directory is controlled directly from the Management System and updates and changes are carried out remotely by the Management System Administrator. **LOCAL:** Select Local to make only the local Phone Book available for the user in Kiosk Mode. **CORPORATE DIRECTORY:** Select Corporate Directory to make the Corporate phone book available for the user in Kiosk Mode. This opens up for remote updates of the phone book.		All
Control Panel > Menu Settings > KIOSK MODE SETTINGS	**KIOSK MENU** **ON:** The Kiosk Mode menus will appear on the screen. **OFF:** No menus or indicators will appear on the screen.		All

MENU ADDRESS	SETTINGS DESCRIPTION	INFORMATION	PRODUCT
Control Panel > Menu Settings > STARTUP	WELCOME MENU **ON:** The Welcome Menu is shown when the system wakes up from standby mode. **OFF:** The Welcome Menu is not shown when the system wakes up from standby mode. Press the OK button to open the Welcome Menu.	TIP! When Use Screen as Local PC Monitor is set to On you can set the Welcome Menu to Off. This will avoid the Welcome menu to automatically appear on screen. Press the OK button on the remote control to see the Welcome menu.	All
Control Panel > Menu Settings > STARTUP	WELCOME PICTURE **SELFVIEW:** is shown in the background of the welcome menu. In most cases this means that main camera is displayed and you can see the video image of yourself. **OFF:** No picture is shown in the background of the welcome menu.	The Welcome Picture is what you see in the background of the welcome menu.	All
Control Panel > Menu Settings > STARTUP	LOGO **ON:** The company logo will appear in the background of the welcome menu. **OFF:** No logo is displayed. Note! The TANDBERG Logo will be displayed if no other company logo is loaded and Logo is set to On.	It is possible to upload a company logo to the system. For more information about how to upload a logo, see How to Apply Your Own Logo in the Using the system section.	All
Control Panel > Menu Settings > STARTUP	DISPLAY WELCOME TIME **ON:** The Welcome date and time is displayed on the welcome menu. Requires the NTP IP settings to be configured to synchronize with the NTP time server. **OFF:** The Welcome date and time is hidden from the welcome menu.		
Control Panel > Menu Settings > STARTUP	DISPLAY WELCOME TEXT **ON:** The Welcome text is displayed on the welcome menu. **OFF:** The Welcome text is hidden from the welcome menu.	The default Welcome Text displays your system name and the dial in numbers.	All
Control Panel > Menu Settings > STARTUP	WELCOME TEXT You can change the welcome text to any text you like, instead of the default text. To display the text, this requires Display Welcome Text set to On.		All
Control Panel > Menu Settings > ICONS	ICON PLACEMENT Applies to the following icon indicators: Microphone Off, Volume Off, On Air, Encryption, Bad Network, Telephone, Duo Video and Camera Tracking. **TOP LEFT:** Place the icon indicators at the top left corner of the screen. **TOP RIGHT:** Place the icon indicators at the top right corner of the screen.		All
Control Panel > Menu Settings > ICONS	MICROPHONE OFF This indicator is shown when the microphone is turned off. Press the Mic Off button on the remote control again to turn the microphone back on. **ON:** Enables the Microphone Off indicator. When the microphone is turned Off the indicator will be shown **OFF:** Disables the Microphone Off indicator. When the microphone is turned Off no indicator will be shown		All

MENU ADDRESS	SETTINGS DESCRIPTION	INFORMATION	PRODUCT
Control Panel > Menu Settings > ICONS	**VOLUME OFF** This indicator is shown when the volume is turned off. Press Volume + on the remote control to turn the volume back on. **ON:** Enables the Volume Off indicator. When the volume is turned Off the indicator will be shown **OFF:** Disables the Volume Off indicator. When the volume is turned Off no indicator will be shown		All
Control Panel > Menu Settings > ICONS	**ON AIR (HAVING THE FLOOR)** When you are displayed in full screen (having the floor) in a multipoint conference this is indicated by the On Air icon. **ON:** Enables the On Air indicator. When you are displayed in full screen the indicator will be shown **OFF:** Disables the On Air indicator. When you are displayed in full screen no indicator will be shown		All
Control Panel > Menu Settings > ICONS	**ENCRYPTION** **ON:** Enables the Encryption indicator. When Encryption (Secure Conference) is active one of the indicators will be shown, according to the level of security ▪ Double Padlock The indicator is shown when AES encryption (Secure Conference) is active. ▪ Single Padlock The indicator is shown when DES encryption (Secure Conference) is active. ▪ Open Padlock The indicator is shown during the initialization phase for AES or DES encryption. During this period the call is not secure. **OFF:** Disables the Encryption indicator. When Encryption (Secure Conference) is not active no indicator will be shown	 AES Encryption, DES Encryption, No encryption	All
Control Panel > Menu Settings > ICONS	**BAD NETWORK** This indicator appears if the system detects network anomalies like packet loss (5%), jitter (200ms) etc., during a call. Open the menu by pressing the OK/Menu button and select the warnings icon to see details. **ON:** Enables the Bad Network indicator. When the system detects network anomalies the indicator will be shown **OFF:** Disables the Bad Network indicator. When the system detects network anomalies no indicator will be shown		All
Control Panel > Menu Settings > ICONS	**TELEPHONE** This indicator is shown when there are telephone participants in a MultiSite conference. Indications are given for 1, 2, 3 or more than 3 participants. **ON:** Enables the Telephone indicator. When there are telephone participants in a MultiSite conference an indicator will be shown **OFF:** Disables the Telephone indicator. When there are telephone participants in a MultiSite conference no indicator will be shown		All with the MultiSite option

MENU ADDRESS	SETTINGS DESCRIPTION	INFORMATION	PRODUCT
Control Panel > Menu Settings > ICONS	**DUOVIDEO** This indicates that a Dual Stream/H.239 is sent from you (near end). The DuoVideo feature allows participants at the far end to simultaneously watch a presenter on one screen and a live presentation on the adjoining screen. **ON:** Enables the DuoVideo indicator. When a Dual Stream is sent from you (near end) the indicator will be shown **OFF:** Disables the DuoVideo indicator. When a Dual Stream is sent from you (near end) no indicator will be shown		All with the Presenter option
Control Panel > Menu Settings > ICONS	**CAMERA TRACKING** The Camera Tracking icon indicates that the camera is zooming in on a single person speaking. **ON:** Enables the Camera Tracking indicator. When the camera zoom in on a single person speaking the indicator will be shown **OFF:** Disables the Camera Tracking indicator. When the camera zoom in on a single person speaking no indicator will be shown		All with controllable camera
Control Panel > Menu Settings > ICONS	**HEADSET** Applies to systems with a headset input. TANDBERG 1000 MXP: Connect the headset and activate the headset by pressing the button in front, located below the TANDBERG logo. Deactivate the headset by pressing the button once more. TANDBERG 1700 MXP: The headset is activated by default when the connectors are connected. The headset can be deactivated by pressing the button placed above the connectors. Press the button once more to activate the headset. **ON:** Enables the Headset indicator. When a headset is connected the Headset indicator will be shown. **OFF:** Disables the Headset indicator. When a headset is connected no Headset indicator will be shown.		All with a headset
Control Panel > Menu Settings > ICONS	**WARNINGS** The Warning indicator will display when there is a warning. The Warning indicator is enabled by the system and cannot be turned Off.		All
Control Panel > Presentation Settings >	**PRESENTATION START** If your system has the optional Dual Stream capabilities, you can show two video streams simultaneously, i.e. both video and a presentation. Dual Stream requires the Presenter Option and H.263 video. To check which options are installed, see the System Information menu from the Diagnostics menu. **AUTO:** When you start a presentation the Dual Stream will start automatically (i.e. when you choose a second video source). If your system or the far end system cannot handle DuoVideo/H.239, you will not be using Dual Stream, but rather send the presentation source as your Main Video. **MANUAL:** When you start a presentation the Dual Stream must be started manually. To do so, select Presentation in the Call Menu and select Start Presentation. Then choose a video source from the list on the screen.	About Dual Stream and Bandwidth Using Dual Stream, the quality automatically downspeeds to the optimal bandwidth. This means that you need higher quality to allocate enough bandwidth for the two video streams. Dual Stream borrows bandwidth from main video stream. When Dual Stream is closed, the bandwidth is returned to the main video.	All

MENU ADDRESS	SETTINGS DESCRIPTION	INFORMATION	PRODUCT
Control Panel > Presentation Settings >	**H.239** H.239 supports transmission of two video streams. It combines elements of DuoVideo and People+Content. If H.239 is disabled you will still be able to start TANDBERG Dual Stream. **ENABLED:** Enables the H.239 protocol. **DISABLED:** Disables the H.239 protocol.		All
Control Panel > Presentation Settings >	**FORCE MAC INPUT** Use this setting if the system does not recognize MAC computers as a presentation source, it turns the PC input for Mac computers on and off. **ON:** If set to On, the system will recognize all Mac computers, but may have problems with other presentation sources. **OFF:** If set to Off, the system may have problems recognizing Mac computers as a presentation source.		All
Control Panel > Presentation Settings >	**HORIZONTAL ADJUST DVI** Use this setting to adjust the horizontal position on the DVI input. The default value is 128. **VALUE < 128:** Adjusts the position to the right. **VALUE > 128:** Adjusts the position to the left.		
Control Panel > Presentation Settings >	**CALL VIDEO SOURCE** The Call Video Source is the default video source you would prefer to use in a call. The number of choices are dependent of what video sources are available for your system. Select the default Call Video Source to be used in a call: **MAIN CAM:** The Main Camera (the default setting) will be used as the default call video source every time you make a call, regardless of what the previous video source was. **DOC CAM:** The document camera will be used as the default call video source every time you make a call, regardless of what the previous video source was. **PC:** The main PC will be used as the default call video source every time you make a call, regardless of what the previous video source was. **AUX:** The main AUX will be used as the default call video source every time you make a call, regardless of what the previous video source was. **VNC:** The VNC will be used as the default call video source every time you make a call, regardless of what the previous video source was. **VCR:** The VCR will be used as the default call video source every time you make a call, regardless of what the previous video source was. **CURRENT:** If you set Current as the call video source, the system will start with whatever the previous video source was.		All

MENU ADDRESS	SETTINGS DESCRIPTION	INFORMATION	PRODUCT
Control Panel > Presentation Settings >	**PRESENTATION SOURCE** Select the Presentation Source to be displayed on screen when the blue Presentation key on the remote control is pressed. The number of choices are dependent of what presentation sources are available for your system. **MAIN CAM:** The main camera will be used as presentation source when the Presentation key on the remote control is pressed. **DOC CAM:** The document camera will be used as presentation source when the Presentation key on the remote control is pressed. **PC:** The PC (the default setting) will be used as presentation source when the Presentation key on the remote control is pressed (only for systems with the PC input available). **VNC:** The VNC will be used as presentation source when the Presentation key on the remote control is pressed. **AUX:** The AUX will be used as presentation source when the Presentation key on the remote control is pressed. **VCR:** The VCR will be used as presentation source when the Presentation key on the remote control is pressed. **NONE:** If you set None as the presentation source, the Presentation menu will appear when the blue Presentation key on the remote control is pressed.		All
Control Panel > Presentation Settings >	**SNAPSHOT SOURCE** Select the preferred Snapshot Source to be used when the Snapshot key on the remote control is pressed. The number of choices depends on what snapshot sources are available for your system. **MAIN CAM:** The main camera will be used as snapshot source when the Snapshot key on the remote control is pressed, regardless of what video source that is currently active. **DOC CAM:** The document camera will be used as snapshot source when the Snapshot key on the remote control is pressed, regardless of what video source that is currently active. **PC:** The PC will be used as snapshot source when the Snapshot key on the remote control is pressed, regardless of what video source that is currently active. **AUX:** The AUX will be used as snapshot source when the Snapshot key on the remote control is pressed, regardless of what video source that is currently active. **VNC:** The VNC will be used as snapshot source when the Snapshot key on the remote control is pressed, regardless of what video source that is currently active. **VCR:** The VCR will be used as snapshot source when the Snapshot key on the remote control is pressed, regardless of what video source that is currently active. **CURRENT:** If set to Current (the default Snapshot Source) this means you will take a snapshot of the video source that is currently active.		All
Control Panel > Presentation Settings >	**AUTO-DISPLAY SNAPSHOT** **AUTO:** A sent or received snapshot will automatically be displayed on the screen (the default setting). **MANUAL:** The snapshots will be sent and received, but not displayed. To see the snapshot, choose Display Snapshot in the Presentation menu from the Call Menu.	With Auto-Display Snapshot you can choose to automatically or manually display a sent or received snapshot on screen.	All

MENU ADDRESS	SETTINGS DESCRIPTION	INFORMATION	PRODUCT
Control Panel > Presentation Settings >	**PIP PLACING** With Picture in Picture (PIP) you can decide where the PIP shall appear. PIP has a connection to the Layout button on the remote control. During a call you can move, show and hide the PIP with the Layout button on the remote control at any time. **TOP RIGHT:** PIP is placed in the Top Right corner. **BOTTOM RIGHT:** PIP is placed in the Bottom Right corner. **BOTTOM LEFT:** PIP is placed in the Bottom Left corner. **TOP LEFT:** PIP is placed in the Top Left corner.	Picture in Picture (PIP) A Picture in Picture (PIP) is a smaller picture placed in one of the corners of the screen. The PIP enables you to see an extra picture in your video conference. A PIP can be useful when you use Dual Stream and you need an extra window to see all the pictures.	All
Control Panel > Presentation Settings >	**PRESENTATION RATE** The Presentation Rate is expressed as a percentage of of the call rate and reflects the H.323 and SIP Presentation Rate settings of the sender. The settings are 25%, 50% and 75% of the total available video stream.	When setting up a call with H.323, the bandwidth can be controlled by adjusting the Presentation Rate (dual stream rate).	All
Control Panel > Presentation Settings > VNC SETTINGS	**ADDRESS** Enter the IP Address of the PC with the VNC software installed. To find the IP Address of the PC place the mouse pointer on the VNC program icon placed in the lower right corner of the Windows taskbar. You can also find the IP address using the Command Prompt from your Windows menu: Start > Run, type cmd and press OK button. This will open a command window and from here type ipconfig and press Enter.	Virtual Network Computing (VNC) Settings Virtual Network Computing (VNC) Settings are necessary when using a VNC presentation, e.g. showing a PC presentation from a PC on your network. Read more about PC Soft Presenter and VNC in the Using the system section.	All
Control Panel > Presentation Settings > VNC SETTINGS	**DISPLAY NUMBER** The Display Number for VNC is 0 and upwards. If you are using WinVNC (TightVNC), double-click on the icon on the taskbar to view WinVNC properties. Make sure this number corresponds with Display Number in this menu.		All
Control Panel > Presentation Settings > VNC SETTINGS	**PASSWORD** Enter the same password as specified in WinVNC (TightVNC) properties. The password will be shown as asterisk signs (*) the next time you enter the menu.		All
Control Panel > Call Quality >	**VIDEO ALGORITHM** Use this menu to disable video algorithms in case you have interoperability issues when calling other systems. **H.261:** Legacy video compression and decompression. The system will always have H.261 enabled and thereby, H.261 cannot be unchecked. **H.263:** Normal video compression and decompression. **H.264:** Bandwidth efficient video compression and decompression	The system will automatically select the best video algorithm based on the video source and the capabilities of the remote system.	All

MENU ADDRESS	SETTINGS DESCRIPTION	INFORMATION	PRODUCT
Control Panel > Call Quality >	**AUDIO ALGORITHM** Use this menu to disable audio algorithms in case you want to remove "low quality" audio, or if you have interoperability issues when calling other systems. The system will automatically select the best audio algorithm based on the call rate and the capabilities of the remote system. **G.711:** Normal quality audio (telephone quality 3.1kHz at 64kbps). This audio algorithm is mandatory for video conferencing equipment and cannot be unchecked. **G.728:** Compressed normal quality audio (telephone quality, 3.1 kHz at 16kbps) **G.722:** High quality audio (7 kHz at 48kbps, 56kbps or 64kbps) **G.722.1:** Compressed high quality audio (7 kHz at 24kbps, 32kbps or 48kbps). **AAC-LD:** CD-quality audio, MPEG-4 Advanced Audio Coding - Low Delay (20 kHz, stereo at 128kbps and mono at 64kbps).	Call Rate vs Audio algorithms selected **Automatically preferred audio algorithms on call rates up to and including 192kbps** 1. G.722.1 (24kbps or 32kbps) 2. G.728 (16kbps) 3. AAC-LD (64kbps or 56kbps) 4. G.722 (56kbps, 64kbps or 48kbps)* 5. G.711 (64kbps, 56kbps or 48kbps)** 6. AAC-LD (48kbps or 128kbps) **Automatically preferred audio algorithms on call rates above 192kbps** 1. AAC-LD (128kbps)*** 2. AAC-LD (64kbps or 56kbps) 3. G.722 (64kbps, 56kbps or 48kbps)* 4. G.722.1 (32kbps or 24kbps) 5. G.728 (16kbps) 6. G.711 (64kbps, 56kbps or 48kbps)** 7. AAC-LD (48kbps or 128kbps) * G.722 at 64kbps is used in H.323 and SIP (IP) calls only. ** G.711 at 64kbps is used in SIP and H.323 and SIP (IP) calls only. *** Dependent on a call rate above the AAC-LD 128 threshold. Note that this is not available on all Cisco systems.	All
Control Panel > Call Quality >	**AAC-LD 128** Specify a call rate for stereo audio, AAC-LD 128kbps (Advanced Audio Coding - Low Delay). To enable stereo CD-quality audio you need to specify a call rate for which stereo automatically should be enabled: ▪ From the specified call rate and above the stereo CD quality 128kbps AAC-LD is available. ▪ For lower call rates, mono CD quality 64kbps AAC-LD is available. ▪ Make your selection from 384 kbps and above up to 1920 kbps and above.	**NOTE!** The call rate selection may differ within the different video systems based on the bandwidth available. **NOTE!** Stereo I/O mode needs to be enabled to get stereo audio. See Stereo Settings for details. Stereo audio requires twice the bandwidth as mono CD-quality audio. We recommend enabling stereo audio on high call rates only. Stereo audio can be received and listened to from e.g. a VCR or DVD, but only when the microphone has been set to Off (press Mic Off on the remote control).	All with stereo audio

MENU ADDRESS	SETTINGS DESCRIPTION	INFORMATION	PRODUCT
Control Panel > Call Quality >	**DYNAMIC RESOLUTION** With Dynamic Resolution the system will use the optimal video resolution for the chosen bandwidth. This feature is only applicable to HD (high definition) calls. **AUTO:** When set to Auto and in a HD call: the resolution will differ between the bandwidths 720p, 576p and 448p, dependent on how much motion it is in the picture. The call will start with 720p and change to a lower resolution when there is a lot motion. It will go back to 720p with less motion. **OFF:** Select Off to disable the Dynamic Resolution feature (the default setting)		All
Control Panel > Call Quality >	**MAX UPSTREAM RATE** The Max Upstream Rate (kbps) defines the desired maximum transmitted call rate over H.323 and SIP networks. In this way you can limit the outgoing (upstream/transmit) bandwidth whilst keeping the maximum incoming (downstream/receive) bandwidth. Enter the max upstream rate in kbps for your system.	This feature is especially useful for home offices with different transmit and receive rates, typically ADSL.	All
Control Panel > Call Quality > VIDEO QUALITY	**SHARPNESS & MOTION** Video Quality can be set for Main Camera, PC, VNC, VCR, AUX, Document Camera and Split Screen. The choices available are depending on what equipment is connected to the video system. **SHARPNESS*:** When Video Quality is set to Sharpness, the system will transmit HD at all bit rates, if permitted by the far end. When set to Sharpness the video is optimized for sharp video (4CIF/4SIF, SVGA, XGA, w720p). ▪ The PrecisionHD Camera will prefer w720p. **MOTION*:** When Video Quality is set to Motion and the system has a HD camera connected through LVDS, and the bit rate is equal or above 1152kbps, the system will transmit HD. When set to Motion the video is optimized for smooth motion video: ▪ For low bandwidths: CIF/SIF or w288p ▪ For high bandwidths: 448p/400p, Interlaced CIF (iCIF) / Interlaced SIF (iSIF) or w448p. ▪ The PrecisionHD Camera will prefer: w288p for low bandwidth, w488p from 512 kbps bandwidth and w720p from 1472 kbps bandwidth. **AUTO:** The Split Screen setting can be set to Auto. When the Split Screen is set to Auto the system will choose the best of Motion or Sharpness depending on picture layout and bandwidth. * TANDBERG 550MXP and the TANDBERG 1000MXP do not transmit the following video formats: 448p, 400p, iCIF, iSIF, w288p, w448p, w576p, and w720p.	The default Video Quality settings are: The Main Camera, VCR, AUX and Split Screen have Motion as default. The PC, Document Camera and VNC have Sharpness as default. About intelligent Video Management (IVM) It is possible to configure the picture sent from the system depending upon specific requirements and applications adding an additional level of flexibility and adaptability. Generally, the IVM will always try to transmit the format closest to the video input format based on the configuration of the motion and sharpness.	All
Control Panel > Call Quality > DEFAULT CALL SETTINGS	**CALL TYPE** Some network configurations may cause the setup of a video call to fail. The call will then be set up as a telephone call. This setting requires the setting Fallback to Telephony to be enabled. Select the default Call Type to be used when making a call. The default Call Type can be set to: **VIDEO CALL:** The call will be set up as a video call. **TELEPHONE CALL:** If either the Call Type is set to Telephone Call or the Place Telephone Call icon is selected when making a call, the call will be set up as a telephone call. In all other cases the call will be set up as a video call.	For MultiSite (optional feature) calls, the Call Type enables you to specify both telephone calls and video calls in the same conference. This is done from the Call Menu when you make the calls.	All

MENU ADDRESS	SETTINGS DESCRIPTION	INFORMATION	PRODUCT
Control Panel > Call Quality > DEFAULT CALL SETTINGS	**NETWORK** Network alternatives: **AUTO:** The system will select the correct network depending on the entered number: ▪ If an IP-address (e.g. 10.12.34.56) is entered, H.323 is selected ▪ If the first digits in the number match those set in H.323 Prefix, H.323 is selected ▪ In other cases ISDN* (H.320) is selected **ISDN*:** Select ISDN to ensure that the call is set up as an ISDN call. ▪ ISDN-BRI ▪ ISDN-PRI ▪ Leased E1/T1 ▪ External Networks **H.323:** Select H.323 to ensure that the call is set up as a H.323 call. If a Gatekeeper is present, it is possible to place IP-calls using “telephone style” numbers, e.g. an E.164 alias, according to the numbering plan implemented in the Gatekeeper. The Gatekeeper will translate the dialled number into an IP-address. See H.323 Settings in the Network menu for more information about Gatekeeper settings. **SIP:** Select SIP to ensure that the call is set up as an SIP call. **SYSTEM:** System (the name of a user defined network profile)	* Applies only to systems with ISDN capabilities.	All

MENU ADDRESS	SETTINGS DESCRIPTION	INFORMATION	PRODUCT
Control Panel > Call Quality > DEFAULT CALL SETTINGS	**BANDWIDTH** The system's bandwidth decides the quality of the video picture. The higher the bandwidth the higher the quality. **AUTO:** When set to Auto the system will establish a connection using an appropriate bandwidth for the call, typically: ▪ 384 kbps for ISDN calls* ▪ 768 kbps for IP calls ▪ 512 kbps for SIP calls **MAX:** When set to Max the system will set up the call with maximum bandwidth depending on the selected network. Typically values can be: ▪ 768 kbps on ISDN-BRI* ▪ 1472/1920 kbps (23/30Ch) on ISDN-PRI (T1/E1)* ▪ 4Mbps (4096 kbps, IP and SIP)** **CUSTOM***:** Select a custom value from the list: ▪ 4096 kbps = 4 Mbps, IP only ▪ 3072 kbps = 3 Mbps, IP only ▪ 2560 kbps = 2,5 Mbps, IP only ▪ 1920 kbps = 2 Mbps, 30B**** ▪ 1472 kbps = 23B ▪ 1152 kbps = 18B ▪ 768 kbps = 12B ▪ 512 kbps = 8B ▪ 384 kbps = 6B ▪ 320 kbps = 5B ▪ 256 kbps = 4B ▪ 192 kbps = 3B ▪ 128 kbps = 2B, Bonding/H.221 ▪ 64 kbps = 1B, H.221 ▪ H0 = 1xH0, 384 kbps, PRI only	* 1700 MXP: Do not have ISDN. ** 1700 MXP: Maximum bandwidth is 2Mb. *** Note that some software versions and networks do not support all channel selections. **** 30B, 23B, etc => B - Bearer Channel	All
Control Panel > Call Quality > DEFAULT CALL SETTINGS	**RESTRICT (56KBPS)** A restricted call uses 56 kbps channels rather then the default unrestricted 64 kbps channels. **ON:** Set Restrict (56kbps) to On to force a restricted call using 56 kbps channels **OFF:** The call is not restricted	Some older networks (primarily in the USA) do not support 64kbps channels and require the use of restricted 56kbps calls. By default the system will dial an unrestricted call and downspeed to 56kbps if necessary.	All with ISDN

MENU ADDRESS	SETTINGS DESCRIPTION	INFORMATION	PRODUCT
Control Panel > Audio > LEVEL SETTINGS	**LINE IN LEFT, LINE IN RIGHT** Level Settings lets you set each level independently. Adjust the input level setting to match the output level of the unit you are connecting to the line inputs. The input level should be adjusted so that the average level reaches within the yellow area, preferably in the middle. **LINE IN LEFT:** Set the audio input level for Line in Left. **LINE IN RIGHT:** Set the audio input level for Line in Right. Since the TANDBERG 1700 MXP unit has built-in microphones and loudspeakers, the level settings apply to Line Level Inputs and the headset loudspeakers/microphone only.	**NOTE!** When you use the volume control, it may look like you are able set the volume higher than the level specified here (gain, and not just attenuation). However, a limiter is used to ensure that low levels are amplified, while high and potentially damaging levels will be limited so that the maximum level as specified here will not be exceeded. A compression will thus occur at higher levels. See Interfaces in the Peripheral Equipment section for more information on this topic for your product.	1700
Control Panel > Audio > LEVEL SETTINGS	**HEADSET MIC, HEADSET OUT** It is possible to adjust the headset microphone input level according to the sensitivity of the used headset. The on-screen audio level indicator will make it easier to set the correct input level settings. The input level should be adjusted so that the average level reaches within the yellow area, preferably in the middle. The headset microphone input level are adjustable in steps of 1.5 dB from 0 dB to 22.5 dB. It is possible to adjust the audio output level to the headset loudspeakers. **HEADSET MIC:** Set the audio input level for the headset microphone. Default level is 3 dB. **HEADSET OUT:** Set the audio output level for the headset loudspeakers. Default level is 13.5 dB TANDBERG 1000 MXP: Activate the headset by pressing the button in front, located below the TANDBERG logo. Deactivate the headset by pressing the button once more. Since the TANDBERG 1700 MXP unit has built-in microphones and loudspeakers, the level settings apply to Line Level Inputs and the headset loudspeakers/microphone only. The TANDBERG 1700/1000/Compass/Utility MXP have separate volume settings for loudspeaker and headset output. The volume keys on the remote control also adjust the level of the headset output when the headset is activated by pressing the push-button, without changing the volume setting you have for the loudspeaker. When changing back to the loudspeaker, you will get the volume settings you had before you activated the headset.	**NOTE!** When you use the volume control, it may look like you are able set the volume higher than the level specified here (gain, and not just attenuation). However, a limiter is used to ensure that low levels are amplified, while high and potentially damaging levels will be limited so that the maximum level as specified here will not be exceeded. A compression will thus occur at higher levels. See Interfaces in the Peripheral Equipment section for more information on this topic for your product.	1700 1000

MENU ADDRESS	SETTINGS DESCRIPTION	INFORMATION	PRODUCT
Control Panel > Audio > AUDIO INPUTS	**AUDIO INPUTS - MIC 1-3 AND AUDIO INPUTS 4-6** Lets you configure the inputs (Mic 1-3, Audio In 4-6) and gives an overview of the signal levels. **MIC 1, 2 AND 3:** are intended for electret type microphones. The microphone inputs are balanced with 24V phantom power. Mic 3 on 6000 based systems can be set for Line level instead of Mic level. **AUDIO 4:** is intended for connection to an external microphone amplifier or an external fixed mixer. It is crucial that the external mixer is a fixed mixer. Automatic, smart and other types of adaptive mixers might cause the echo canceller to malfunction. **AUDIO 5:** is intended for connection to external playback devices or to telephone add-on hybrids. As there is no acoustic echo canceller on this input it should not be connected to any microphones. The audio source connected to this input will be heard from the local speaker as well. **AUDIO 6:** is intended for connection to a VCR or DVD player. It can also be connected to other external playback devices. As there is no acoustic echo canceller on this input it should not be connected to any microphones. The audio entering this input will be heard from the local speaker as well. If Auto is selected, the audio from the VCR will only be heard when VCR is selected as video source.	By default, all inputs are enabled. Plug in an audio source and it is active. Audio inputs that are On will automatically be mixed. Unconnected inputs will automatically be muted. Select Off to prevent audio/noise from connected but unused inputs. The activated audio sources are stored on camera presets.	6000
Control Panel > Audio > AUDIO INPUTS	**AUDIO INPUTS* - MIC 1-2 AND AUDIO INPUTS 3-4** Lets you configure the audio inputs and gives an overview of the signal levels. **MIC 1 - 2:** are intended for electret type microphones. The microphone inputs are balanced with 24V phantom power. **AUDIO 3**:** is intended for connection to external playback devices, but the input can also be configured as a microphone input by selecting Mic. When set as a microphone input it will turn off and replace the Mic 2 input. The audio will be mixed an set up as for the Mic 2 input and there will be an echo canceller working on the input to prevent unwanted echo to be heard at the far end. When not configured as a microphone and connecting an external playback device to this input there will be no echo cancelling and the audio source connected to Audio input 3 will be heard from the local loudspeaker as well. **AUDIO 4:** is intended for connection to a VCR or DVD player. It can also be connected to other external playback devices. As there is no acoustic echo canceller on this input it should not be connected to any microphones. The audio entering this input will be heard from the local speaker as well. If Auto is selected, the audio from the VCR will only be heard when VCR is selected as video source.	By default, all inputs are enabled. Plug in an audio source and it is active. Audio inputs that are On will automatically be mixed. Unconnected inputs will automatically be muted. Select Off to prevent audio/noise from connected but unused inputs. The activated audio sources are stored on camera presets. * TANDBERG 550 MXP has Mic 1 (see Mic 1) and Audio 2 (see Audio 3) ** This applies to the 3000 Profile MXP and Tactical MXP only.	3000 95/75
Control Panel > Audio > AUDIO INPUTS	**MIXER MODE** **AUTO:** The adjustment of each microphone signal is done automatically to obtain the best possible audio and minimize the background noise. **FIXED:** Select Fixed to maintain a constant weighting of all microphones.		6000 3000 95/75
Control Panel > Audio > AUDIO INPUTS	**VCR DUCKING** The VCR ducking is only valid for audio input 6. If input 5 and 6 is configured to one stereo input pair (see Stereo Settings) then the VCR ducking will apply to both input 5 and 6. **ON:** If VCR Ducking is activated, the VCR audio level will be attenuated if someone talks into the microphone at your side or at the far end. **OFF:** There is no attenuation of the audio level at near or far end.		6000 3000 95/75

MENU ADDRESS	SETTINGS DESCRIPTION	INFORMATION	PRODUCT
Control Panel > Audio > Audio Inputs > LEVEL SETTINGS	**LEVEL SETTINGS - MIC 1-3 & AUDIO INPUTS 4-6** Applies to: Cisco TelePresence Codec 6000 MXP Audio input levels can be adjusted in accordance to the external audio equipment connected. The on-screen audio level indicator will make it easier to set the correct input level settings. The input level should be adjusted so that the average level reaches the transition between the green and the yellow area. To help adjusting the input levels there is a Peak Performance meter showing the peak audio volume for each of the audio inputs. The audio inputs are adjustable in steps of 1.5 dB from 0 - 22.5 dB. **MIC** 1-3: The default levels for Mic 1, 2 and 3 are set for use with an Audio Technica AT871R or AT841R microphone in an average video meeting room. The gain can be adjusted correctly for a wide range of microphones. **AUDIO** 4-6: Audio inputs 4, 5 and 6 are set to a default level which is adhered to by most manufacturers of audio-visual equipment and is a level at which most audio-visual equipment (CD-players, VCRs or DVDs) will work.	Note! The level should be adjusted so that the Peak Performance meter never reaches the maximum value. This will avoid the Acoustic Echo Canceller to malfunction due to overload of the microphone. Some examples of microphone levels Audio Technica AT871R +3dB (default) Audio Technica AT841R +3dB TANDBERG Audio Science microphone levels: Audio Technica AT-861PZ +3dB Crown PZM-6D +19.5dB See the Interfaces in the Peripheral Equipment section for more information on this topic for your product.	6000
Control Panel > Audio > Audio Inputs > LEVEL SETTINGS	**LEVEL SETTINGS - MIC 1-2 & AUDIO INPUTS 3-4** Applies to: Cisco TelePresence Codec 3000 MXP, 990/880/770 MXP, 550 MXP, Edge 95/75 MXP Audio input levels can be adjusted in accordance to the external audio equipment connected. The on-screen audio level indicator will make it easier to set the correct input level settings. The input level should be adjusted so that the average level reaches the transition between the green and the yellow area. To help adjusting the input levels there is a Peak Performance meter showing the peak audio volume for each of the audio inputs. The audio inputs are adjustable in steps of 1.5 dB from 0 - 22.5 dB. **MIC** 1-2: The default levels for Mic 1 and 2 are set for use with an Audio Technica AT871R or AT841R microphone in an average video meeting room. The gain can be adjusted correctly for a wide range of microphones. **AUDIO** 3-4: The audio inputs 3 and 4 are set to a default level which is adhered to by most manufacturers of audio-visual equipment and is a level at which most audio-visual equipment (CD-players, VCRs or DVDs) will work.	Note! The level should be adjusted so that the Peak Performance meter never reaches the maximum value. This will avoid the Acoustic Echo Canceller to malfunction due to overload of the microphone. Some examples of microphone levels Audio Technica AT871R +3dB (default) Audio Technica AT841R +3dB TANDBERG Audio Science microphone levels: Audio Technica AT-861PZ +3dB Crown PZM-6D +19.5dB See the Interfaces in the Peripheral Equipment section for more information on this topic for your product. * TANDBERG 550 MXP has Audio 2 and Headset Mic	3000 95/75

MENU ADDRESS	SETTINGS DESCRIPTION	INFORMATION	PRODUCT
Control Panel > Audio > AUDIO OUTPUTS	AUDIO OUT 1-3 Applies to: Cisco TelePresence Codec 6000 MXP **OUT1:** is intended for connection to TANDBERG Digital Natural Audio Module, televisions or audio amplifiers. **OUT2 (AUX):** is intended for connection to audio recording equipment or to a telephone add-on hybrid. The signal is a mix of audio from both the far end and local end (not from Audio in 5). If an output is Off, no audio will be sent to that output. Do not connect Out2 (AUX) to a loudspeaker placed in the same room as the microphones connected to the system. This will cause "howling" and possible damage to the speaker system. **OUT3 (VCR):** is intended for connection to a VCR or other recording equipment. The signal is a mix of audio from far end and local end (not from Audio in 6). If an output is Off, no audio will be sent to that output. Do not connect Out3 (VCR) to a loudspeaker placed in the same room as the microphones connected to the system. This will cause "howling" and possible damage to the speaker system.	NOTE! The Audio Out 2 or Audio Out 3 should never be connected to a loudspeaker placed in the same room as the microphones connected to the system. This will cause "howling" and possible damage to the speaker system. The different system can have different numbers of Audio Inputs. See Interfaces in the Peripheral Equipment section for more information on this topic for your product. When no audio module is detected, audio outputs can be: Out 2 for VCR Left Out 3 for VCR Right.	6000
Control Panel > Audio > AUDIO OUTPUTS	AUDIO OUT 1-2* Applies to: Cisco TelePresence Codec 3000 MXP, 990/880/770 MXP, 550 MXP, Edge 95/75 MXP **OUT1:** is intended for connection to televisions or audio amplifiers. **OUT2 (AUX):** is intended for connection to a VCR or other recording equipment. The signal is a mix of audio from far end and local end (except VCR in).	NOTE! The Audio Out 2 should never be connected to a loudspeaker placed in the same room as the microphones connected to the system. This will cause "howling" and possible damage to the speaker system. If an Output is set to Off, no audio will be sent to that output. When no audio module is detected, audio outputs can be: Out 1 for VCR Left Out 2 for VCR Right. * TANDBERG 550 MXP has one Audio Output (see Out1)	3000 95/75
Control Panel > Audio > AUDIO OUTPUTS	OUT 1 MODE Set the mode for the Audio Out 1. The default mode is Auto. **ANALOG:** Setting the Out 1 Mode to Analog will override the auto-detected mode. **SPDIF (DIGITAL):** Setting the Out 1 Mode to SPDIF (Digital) will override the auto-detected mode. **AUTO:** If Out 1 Mode is set to Auto, the system will select Analog or SPDIF (Digital) mode dependent on the detected Audio Module. If a TANDBERG Digital NAM is detected the SPDIF mode will be selected, otherwise analog mode will be selected. See Stereo Settings for additional information. ▪ When Analog Mode is selected and the Stereo Speakers set to On, this will provide a stereo loudspeaker signal on Audio out 1 and 2. ▪ When SPDIF Mode is selected you are can receive stereo through Audio Out 1 independent of the Stereo I/O Mode setting. ▪ If both Stereo I/O Mode and Stereo Speakers are set to Off, the output response will be a mono loudspeaker signal on Audio Out 1, AUX on Audio Out 2 and VCR on Audio Out 3 regardless on the Audio Out 1 Mode setting.	See Interfaces in the Peripheral Equipment section for more information on this topic for your product. SPDIF - Sony/Philips Digital Interface	6000 3000 95/75

MENU ADDRESS	SETTINGS DESCRIPTION	INFORMATION	PRODUCT
Control Panel > Audio > AUDIO OUTPUTS	**AUDIO MODULE** This menu item is only available if the audio module is unidentified, otherwise it is hidden. If the system has automatically detected Digital NAM (DNAM - Digital Natural Audio Module), then this menu item will not be available. If the Audio Module is unidentified you will be allowed to select an Audio Module according to the type of Audio Module installed. The audio module options are: ▪ NAMII-T6000 ▪ NAMII-T8000 ▪ Digital NAM ▪ None		6000 3000 95/75
Control Panel > Audio > Audio Outputs > LEVEL SETTINGS	**OUTPUT LEVEL SETTINGS - OUT 1-3** Applies to: Cisco TelePresence Codec 6000 MXP Adjust the audio output levels according to the parameters of the external audio equipment connected. These levels should only be adjusted when installing new audio equipment. The default settings are correct for the TANDBERG Digital Natural Audio Module (DNAM) and for most consumer electronics devices (televisions, VCRs, etc.). Use the volume keys on the remote control to adjust the level of output 1 (the speaker output). The volume control has no effect on other outputs. **OUT1:** is intended for connection to TANDBERG Digital Natural Audio Module, televisions or audio amplifiers. Set the maximum level. The nominal level is -10,0 dBu. **OUT2 (AUX):** is intended for connection to audio recording equipment or to a telephone add-on hybrid. The signal is a mix of audio from both the far end and local end (not from Audio in 5). Set the maximum level. The nominal level is -10,0 dBu. **OUT3 (VCR):** is intended for connection to a VCR or other recording equipment. The signal is a mix of audio from far end and local end (not from Audio in 6). Set the maximum level. The nominal level is -10,0 dBu.	See the Interfaces in the Peripheral Equipment section for more information on this topic for your product. When no audio module is detected, audio outputs can be: Out 2 for VCR Left Out 3 for VCR Right.	6000
Control Panel > Audio > Audio Outputs > LEVEL SETTINGS	**OUTPUT LEVEL SETTINGS - OUT 1-2*** Applies to: Cisco TelePresence Codec 3000 MXP, 990/880/770 MXP, 550 MXP, Edge 95/75 MXP Adjust the audio output levels according to the parameters of the external audio equipment connected. These levels should only be adjusted when installing new audio equipment. The default settings are correct for the TANDBERG Digital Natural Audio module and for most consumer electronics devices (televisions, VCRs, etc.). The volume keys on the remote control adjust the level of output 1 (the speaker output). The volume control has no effect on other outputs.. **OUT1:** is intended for connection to televisions or audio amplifiers. Set the maximum level. The nominal level is -10,0 dBu. **OUT2 (AUX):** is intended for connection to a VCR or other recording equipment. The signal is a mix of audio from far end and local end (except VCR in). Set the maximum level. The nominal level is -10,0 dBu.	See the Interfaces in the Peripheral Equipment section for more information on this topic for your product. When no audio module is detected, audio outputs can be: Out 1 for VCR Left Out 2 for VCR Right. * TANDBERG 550 MXP has one Audio Output (see Out1).	3000 95/75

MENU ADDRESS	SETTINGS DESCRIPTION	INFORMATION	PRODUCT
Control Panel > Audio > ECHO CONTROL	**MIC 1-3* AND AUDIO 4*** Lets you control the Echo Canceller and Noice Reduction at your system by configuring the Echo Control settings. Each of the three microphone Inputs and Audio Input 4 has a separate Acoustic Echo Canceller. One Acoustic Echo Canceller per input provides more sophisticated control than having one common canceller for all microphones. The system also has built-in Noise Reduction (NR). NR reduces constant background noise (e.g. noise from air-conditioning systems, cooling fans etc.). In addition, a high pass filter (Humfilter) reduces very low frequency noise. **ON:** Echo Control is normally set to On to prevent the far end from hearing their own audio. Once selected, echo cancellation is active at all times. The echo canceller continuously adjusts itself to the audio characteristics of the room and compensate for any changes it detects in the audio environment. If the changes in the audio conditions are very significant the echo canceller may take a second or two to re-adjust. **OFF:** You can choose to switch off the Echo Canceller for the available audio sources. Echo Control should be switched Off if external echo cancellation or playback equipment is used. **ON+NR:** Activates both Echo Control and Noise Reduction. NOTE! It is your Acoustic Echo Canceller that improves the audio quality experienced by the other side. When you hear an echo of your own audio it is most likely the far end's Acoustic Echo Canceller that is malfunctioning. NOTE! If Stereo Speakers are enabled in the menu without having any stereo speakers connected to the Digital NAM, it may cause the acoustic echo-canceller to malfunction. * Cisco TelePresence Codec 3000 MXP, 990/880/770 MXP, 95/75 MXP do not have Mic 3 and Audio 4 inputs.	Improving the echo canceller performance: Place all microphones as far as possible from the loudspeakers. Minimum loudspeaker-microphone distance should be two meters (6.5 ft). We recommend placing the microphones 1-2 meters away from the persons speaking. By using several microphones, the ratio distance loudspeaker-to-mic/mic-to-speaker can be increased. Increasing this ratio improves the echo canceller performance. Place the microphones as far as possible from noise sources. Reduce the volume setting. Ensure that the loudspeakers do not distort the audio. The echo canceller tries to estimate the echo path from the speaker system to the microphones. Moving objects change this path; therefore try to avoid moving objects. Be especially aware of large objects and objects placed close to either the microphone or the speaker system as these objects will cause severe changes to the echo path. Avoid putting paper sheets etc. on the microphone. Avoid moving the microphone or loudspeaker. In the presence of low frequency noise, enable the noise reduction (NR).	6000 3000 95/75

MENU ADDRESS	SETTINGS DESCRIPTION	INFORMATION	PRODUCT
Control Panel > Audio > STEREO SETTINGS	**STEREO I/O MODE** **ON:** If Stereo I/O Mode is On the Audio Input 5 and 6 and Audio Output 2 and 3 will behave as a stereo input/output pair (VCR-left and right). The VCR Ducking and AGC setting for Audio Input 6 will in this case apply to both Audio Input 5 and 6. The Audio Out 2 (VCR-left stereo channel) will be a mix of the microphones and the far end left channel. Audio Out 3 (VCR-right stereo channel) will be a mix of the microphones and the far end right channel. NOTE: If stereo speakers are set to On in analog mode, they will provide a different scheme. See the Interfaces in the Peripheral Equipment section for more information on this topic for your product. **OFF:** If Stereo I/O Mode is Off the Audio Out 2 will be a mix of Audio Input 6, microphones and the far end (the received far end signal is either mono or stereo that is blended into mono in the near end codec). Audio Out 3 will be a mix of Audio Input 5, microphones and the far end. Note that stereo speakers set to On in analog mode will provide a different scheme. ▪ If the Out1 Mode is set to Analog mode and the Stereo Speaker is set to On, this will provide a stereo loudspeaker signal on Audio out 2 and 3. ▪ If the Out1 Mode is set to SPDIF mode you are able to receive stereo through Audio Out 1 independent of the Stereo I/O Mode setting. ▪ When both Stereo I/O Mode and Stereo Speakers is set to Off, the output response will be a mono loudspeaker signal on Audio Out 1, AUX on Audio Out 2 and VCR on Audio Out 3 regardless on the Audio Out 1 Mode setting.	Digital NAM (Digital Natural Audio Module) If the system is connected to a Digital NAM, the stereo sound on the loudspeakers will be present if a stereo input signal is connected to the inputs VCR-Left and VCR-Right, or a stereo signal is received from the Far End. If the system is not connected to a Digital NAM, stereo sound on the loudspeaker outputs will be present in the following situations: If the system is idle and a stereo input signal is connected to the inputs VCR-Left and VCR-Right. If the system is in a call with the microphone off and a stereo input signal is connected to the inputs VCR-Left and VCR-Right, or a stereo signal is received from the Far End. Otherwise the Loudspeaker Left signal will be equal to Loudspeaker Right. SPDIF - Sony/Philips Digital Interface	6000 3000 95/75
Control Panel > Audio > STEREO SETTINGS	**STEREO SPEAKERS** **ON:** Set the Stereo Speakers to On to enable stereo output signal to the loudspeaker. **OFF:** Set the Stereo Speakers to Off to disable stereo output signal to the loudspeaker. When both Stereo I/O Mode and Stereo Speakers is set to Off, the output response will be a mono loudspeaker signal on Audio Out 1, AUX on Audio Out 2 and VCR on Audio Out 3 regardless on the Audio Out 1 Mode setting.	See the Interfaces in the Peripheral Equipment section for more information on this topic for your product.	6000 3000 95/75
Control Panel > Audio > AUDIO LEVELING	**AUDIO LEVELING (AGC)** NOTE! According to TIA-968-B FCC Part 68, AGC must not be disabled when this product is used in the U.S and Canada. The AGC (Automatic Gain Control) controls the audio level from MICs, AUX, VCR and Received Audio so that strong signals are attenuated and weak signals are amplified. This makes it easier to hear all participants in a conference. **ON:** Set Audio Leveling On to allow automatic adjustments (Automatic Gain Control) of the audio levels from Mics, AUX, VCR and Received Audio. When On, the AGC maintains the audio signal level at a fixed value by attenuating strong signals and amplifying weak signals. Very weak signals, i.e. noise alone, will not be amplified. **OFF:** Audio Leveling is not activated. When applying a weak signal in the presence of strong background noise, the AGC might amplify the background noise as well as the signal. Therefore, in noisy environments, it is advisable to turn the AGC off.	In most conferences, the participants will speak at different levels, and be at different distances from the microphones. As a result, some of the participants will be harder to hear than others. The AGC (Automatic Gain Control) corrects this problem by automatically increasing the microphone levels when “quiet” or “distant” people speak, and by decreasing the microphone levels when “louder” people speak. TIP! To ensure correct behavior of the AGC (Automatic Gain Control), it is crucial that the levels on the input connectors are adjusted correctly using the audio input level settings. The AGC will not compensate for severe maladjustment of input levels.	6000 3000 95/75

MENU ADDRESS	SETTINGS DESCRIPTION	INFORMATION	PRODUCT
Control Panel > Audio > ALERT TONES & VOLUME	**VIDEO CALL ALERT TONE** Lets you choose tone that will sound when you have an incoming video call. Use the vertical Arrow keys on the remote control to move up and down in the Alert tone list. Press OK to listen to the alert tone selected. To stop playing the alert tone, use the vertical Arrow keys to move away from the menu item. Upon leaving the entire menu, you will be prompted to confirm any changes you may have made.	**TIP!** To make it easy to distinguish between incoming video calls and ordinary telephone calls, we recommend the use of different ringing tones for video and telephone calls.	All
Control Panel > Audio > ALERT TONES & VOLUME	**TELEPHONE ALERT TONE** Lets you choose tone that will sound when you have an incoming audio call.. Use the vertical Arrow keys on the remote control to move up and down in the Alert tone list. Press OK to listen to the alert tone selected. To stop playing the alert tone, use the vertical Arrow keys to move away from the menu item. Upon leaving the entire menu, you will be prompted to confirm any changes you may have made.	**TIP!** To make it easy to distinguish between incoming video calls and ordinary telephone calls, we recommend the use of different ringing tones for video and telephone calls.	All
Control Panel > Audio > ALERT TONES & VOLUME	**ALERT VOLUME** Set the volume (0-15) of the Alert signals.		All
Control Panel > Audio > ALERT TONES & VOLUME	**ALERT SPEAKER** For systems with an internal alert speaker the speaker can be turned On/Off. **ON:** The internal speaker will warn you of an incoming call, even though the monitor may not be switched on. **OFF:** The internal speaker is switched off.		6000 3000 95/75
Control Panel > Audio > ALERT TONES & VOLUME	**KEY TONES** The unit can produce a sound every time a remote control key is pressed. **ON:** There will be a sound indicator when pressing keys on the remote control **OFF:** The remote control Key Tones is switched off.		All
Control Panel > Audio > GRAPHICAL VIEW	**GRAPHICAL VIEW** The graphical view is a visual presentation of the connection between the audio inputs and outputs. You can play a test tone that will appear at the outputs selected. To play a test tone, navigate to any of the Inputs or Outputs and click OK. The green dots indicates connection and when you play the test tone the “marching ants” will show you the signal flow.	The Graphical View menu is only available on video systems with audio inputs and audio outputs.	All except 1000
Control Panel > Audio > GRAPHICAL VIEW	**TEST TONE** Select a tone from the list. You may use any of the alert signals as Test Tone signal.	The Graphical View menu is only available on video systems with audio inputs and audio outputs.	All except 1000

MENU ADDRESS	SETTINGS DESCRIPTION	INFORMATION	PRODUCT
Control Panel > Video >	**CAMERA TRACKING MODE** The Camera Tracking Mode controls how fast the camera should zoom in on a single person speaking. **SLOW:** The system waits a while before zooming in on a single person speaking. Suitable when wide-angle images are preferred over close-up images. **NORMAL:** Should be used in regular meetings. **FAST:** The system quickly zooms in on a single person speaking. Suitable when close-ups are preferred over wide-angle images.	This menu entry is available only if using the TANDBERG PrecisionHD Camera or the WAVE II Camera.	For systems using Precision HD camera
Control Panel > Video >	**MCU STATUS LINE** The MultiSite, MCU and DuoVideo status info can be displayed whenever applicable, not displayed at all, or displayed for a short time. The information is displayed on the MCU Status Line, which appear on top of the screen and provides information about the conference. **AUTO:** The MultiSite, MCU and DuoVideo status info will be displayed for a few seconds and then timed out. When the remote control is moved, the indicators will be shown again. **ON:** The MultiSite, MCU and DuoVideo status info will be displayed on the MCU status line to provide information about the conference. **OFF:** The MultiSite, MCU and DuoVideo status info will not be displayed.	MCU is short for Multipoint Conference Unit, a device used to connect multiple audio and video sites in one or more IP, ISDN and mixed IP & ISDN video meetings.	All
Control Panel > Video >	**FLOOR TO FULL SCREEN** With the Floor to Full Screen setting you can decide where the picture shall be displayd when a participant requests the floor. **ON:** When Floor to Full Screen is set to On, anyone who requests floor will be seen by all participants in full screen, regardless of what MultiSite layout that is used. **OFF:** The participant who has the floor is displayed in the MultiSite layout that is used rather than in full screen. E.g. someone who requests floor in a MultiSite conference using the 5+1 layout will be seen in the large square.	Example: If the Floor to Full Screen is set to Off, then the participant who request the floor will be displayed in the large square.	All with MultiSite option
Control Panel > Video >	**WEB SNAPSHOTS** The system can generate JPEG snapshots of the picture on screen and provide them when requested via a web interface (as http or via ftp get). **ON:** The generation of Web Snapshots is enabled. **OFF:** The generation of Web Snapshots is disabled (default). NOTE! Web snapshots are not generated if the conference is encrypted.	About web snapshot files It is possible to access a file system within the Cisco system by means of ftp. The web snapshot files available are: `site0.jpg` - Snapshot of current stream if MultiSite. `main.jpg` - Snapshot of selfview. `site1.jpg` - Snapshot of decoded stream if point-to-point. `duo.jpg` - Snapshot of either the encoded stream (if transmitting DuoVideo) or the decoded stream (if receiving DuoVideo).	All

MENU ADDRESS	SETTINGS DESCRIPTION	INFORMATION	PRODUCT
Control Panel > Video >	**MULTISITE PICTURE MODE** MultiSite Picture Mode determines the default layout of a MultiSite call. A meeting with more than two participants will make use of MultiSite. You can change the layout during a call using the Layout option in MultiSite Services. **AUTO SPLIT:** Displays all participants on the screen simultaneously. A MultiSite call with 3 or 4 video participants is displayed with 4 Split. A MultiSite call with 5 or 6 video participants is displayed with 5+1 Split. **VOICE SWITCHED:** Displays the participant that is speaking in full screen. **4 SPLIT:** Displays the four latest speaking Participants. **5+1 SPLIT:** Displays the speaking participant in a big picture and the other participants in small pictures.		All with MultiSite option
Control Panel > Video > VIDEO NAME	**VIDEO 1-4, VGA, VNC** The number of video inputs (video 1-4) can vary between the different video systems. As a default, the video inputs are given the names Main Cam, PC, Doc Cam, VCR, AUX and VNC, depending on the video sources available on your system. You may change these names to your liking. Note, however, that the video names cannot exceed eight characters.	**NOTE!** The options available in the Video Name dialog box correspond to the video sources available on your system.	All

MENU ADDRESS	SETTINGS DESCRIPTION	INFORMATION	PRODUCT
Control Panel > Security Settings >	**ENCRYPTION** Provided that all parties participating have equipment supporting encryption, video meetings may be set up using encrypted communication. **OFF:** The system will not send or receive encrypted data. **ON:** The system will send and receive encrypted data only. The call will not be established unless all participants supports encryption. **AUTO:** The system will try to set up calls using encryption. • Point to point calls: If the far end system supports encryption (AES or DES), the call will be encrypted. If not, the call will proceed without encryption. • MultiSite calls*: In order to have encrypted MultiSite calls, all sites must support encryption. A padlock symbol on screen will indicate the encryption mode (AES or DES). If there is a mix of AES and DES encryption, only the symbol for DES encryption (single padlock) will be displayed. The 'closed padlock' will only be displayed on each site when all links in the MultiSite conference are encrypted. * Only available on systems with MultiSite option supported and installed.	See the Diagnostics > Call Status menu for information about the encryption algorithm and the encryption check code.	All
Control Panel > Security Settings >	**ENCRYPTION MODE** Let you choose between AES, DES, or have the system itself find the mode that all parties support. **AES (128 BIT):** The system will try to use AES with 128 bits encryption when setting up calls. If AES is not supported by the other site(s), no other type of encryption will be initiated. **DES (56 BIT):** The system will try to set up the call using DES with 56 bits encryption. If none of the other sites support DES, no other type of encryption will be initiated. **AUTO:** The system will try to use the most secure encryption – AES (128 bit) – depending on the capabilities of the other sites. For sites that do not support AES encryption, DES (56 bit) encryption will be tried.	Both AES and DES encryption are supported for mixed ISDN*/IP calls. Both AES and DES encrypted sites can be connected at the same time. * 1700 MXP does not support ISDN.	All
Control Panel > Security Settings >	**ADMINISTRATOR PASSWORD** See Administrator Password in Control Panel > Menu Settings.	Using the Security menu gives you a good overview and a quick way to change the security passwords of the system.	All
Control Panel > Security Settings >	**IP ACCESS PASSWORD** See IP Access Password in Control Panel > Network Settings > LAN Settings.	The IP Access Password is case sensitive.	All
Control Panel > Security Settings >	**STREAMING PASSWORD** See Streaming Password in Call Menu > Streaming Settings.		All
Control Panel > Security Settings >	**VNC PASSWORD** See VNC Password in Control Panel > Presentation Settings.		All

MENU ADDRESS	SETTINGS DESCRIPTION	INFORMATION	PRODUCT
Control Panel > Security Settings >	**REMOTE UPGRADE PASSWORD** Set the password to be used for remote software upgrade. The default password is blank. In addition to the password, remote software upgrade must be enabled. Go to: Control Panel > General Settings > Permissions > Far End ISDN System Upgrade.		All with ISDN
Control Panel > Security Settings >	**CAMERA STANDBY MODE** Camera Standby Mode enables the camera to turn away when the system is inactive, which makes it easy to make a visual check to see if the system is active or in standby mode. **ON:** The camera turns away when standby mode is activated and turns back to normal position when the system is active. **OFF:** The camera will always stay in normal position and will not turn away when standby mode is active.		All with controllable camera
Control Panel > Security Settings >	**FIPS MODE** When FIPS mode is enabled, the video system will operate according to NIST FIPS 140-2 Level 1 requirements. This means that only services and cryptographic algorithms that are accepted according to this standard will be used. Options and menu items which is not approved will be grayed out and/or not be selectable in the menus. NIST issues certificates to products that has been verified and tested to comply with this standard, as of this writing TANDBERG is in the process of obtaining such a certificate. **ON:** The codec is operating according to FIPS 140-2 Level 1 requirements. Due to these requirements, some menus are disabled in FIPS mode. **OFF:** The codec is operating with full feature set enabled.	Read about FIPS Mode in the Appendices section to learn about how to activate/deactivate FIPS Mode and how to upload a Certificate and to view a list of the menus disabled in FIPS mode FIPS - Federal Information Processing Standards. NIST - National Institute of Standards and Technology, the issuer of validation certificates. Certificate - Text file which indicates a trusted third party (issuer or CA) verifying the authenticity of the unit (in this context). CA - Certificate authority, issuer of (root) certificates.	All
Control Panel > Network > ISDN or ISDN, EXTERNAL, LEASED E1/T1	**NETWORK TYPE** Before using the system it is necessary to specify which network to use and define its settings. **NONE:** No network type is selected. **ISDN-BRI:** Select ISDN-BRI if you have an ISDN-BRI connection. Enter the ISDN-BRI Settings menu to set the parameters. **ISDN-PRI:** Select ISDN-PRI* if you have an ISDN-PRI connection. Enter the ISDN-PRI Settings menu to set the parameters. **LEASED E1/T1:** Select Leased E1/T1* if you have a Leased E1/T1 connection. Enter the Leased E1/T1 Settings menu to set the parameters. **EXTERNAL:** Select External if the network is set up by RS449, V.35, X.21 or you connect to ISDN via an external IMUX. Enter the External Network Settings menu to set the parameters. * Note that both Leased E1/T1 and ISDN-PRI uses the same interface on the codec marked E1/T1	Configure the video system for ISDN-BRI Enter the ISDN-BRI Settings menu and set the parameters: Set ISDN-BRI switch type Enter ISDN-BRI line numbers (+ SPIDs if required) Disable unused ISDN-BRI lines Set the Advanced ISDN Settings Configure the video system for ISDN-PRI Enter the ISDN-PRI Settings menu and set the parameters: Set ISDN-PRI switch type Enter ISDN-PRI line number range Enter the ISDN-PRI Channel Hunting settings Configure the ISDN-PRI Line Settings Set the Advanced ISDN Settings Set the Advanced ISDN-PRI Settings	All with ISDN

MENU ADDRESS	SETTINGS DESCRIPTION	INFORMATION	PRODUCT
Control Panel > Network > ISDN > or ISDN, External, Leased E1/T1 > ISDN-BRI SETTINGS	**ISDN SWITCH TYPE** Select the type of ISDN network connected to your unit. Note that 1TR6 should only be used if you are operating the system behind a PABX.		All with ISDN-BRI
Control Panel > Network > ISDN > or ISDN, External, Leased E1/T1 > ISDN-BRI SETTINGS	**AUTO BRI CONFIG** The Auto-BRI Config setting is only applicable after the ISDN Switch Type is set to National ISDN and the change has been saved. **ON:** When set to On, the system retrieves SPID (Service Profile Identifier) values automatically from the network. Not supported by all National ISDN networks. **OFF:** When set to Off the SPID is to be set manually.		All with ISDN-BRI
Control Panel > Network > ISDN > or ISDN, External, Leased E1/T1 > ISDN-BRI Settings LINE 1-6 SETUP	**LINE ENABLE** Select Line Setup for the ISDN-BRI Line you want to configure. Enable the active lines and disable the unused lines. Note that Line 1 should always be enabled. **ON:** When set to On the ISDN-BRI line is enabled. Line 1 should always be enabled. **OFF:** When set to Off the ISDN-BRI line is disabled. Unused ISDN-BRI lines must be disabled.	Some software versions do not support 6 ISDN-BRI lines. If so, some of the Line Setup entries may be grayed out.	All with ISDN-BRI
Control Panel > Network > ISDN > or ISDN, External, Leased E1/T1 > ISDN-BRI Settings LINE 1-6 SETUP	**NUMBER 1, NUMBER 2** Select Line # Setup for the ISDN-BRI Line you want to configure. Enable the active lines and disable the unused lines. Enter the numbers associated with your ISDN-BRI lines. Most BRI's with SPID's are area code and number at the end, like so: `70312345670101`		All with ISDN-BRI
Control Panel > Network > ISDN > or ISDN, External, Leased E1/T1 > ISDN-BRI Settings LINE 1-6 SETUP	**SPID1, SPID2** If your ISDN-BRI Switch Type is National ISDN or AT&T Custom ISDN, they might require SPID (Service Profile IDentifier) numbers associated with your ISDN-BRI numbers. If you have received two different SPID numbers for each ISDN-BRI line from your network provider, you must enter both numbers.		All with ISDN-BRI
Control Panel > Network > ISDN > or ISDN, External, Leased E1/T1 > ISDN-BRI Settings > ADVANCED ISDN SETTINGS	**SUB ADDRESS** Using a Sub Address enables you to connect up to eight ISDN terminals to the same ISDN telephone number and line. The terminals are addressed by using different sub addresses. To call a terminal with a sub address, separate the ISDN telephone number and the sub address with a '*'. Example: `12345678*2` (up to four digit sub addresses are possible)	This service is dependent on your service provider and has limited access on some ISDN networks.	All with ISDN-BRI

MENU ADDRESS	SETTINGS DESCRIPTION	INFORMATION	PRODUCT
Control Panel > Network > ISDN > or ISDN, External, Leased E1/T1 > ISDN-BRI Settings > ADVANCED ISDN SETTINGS	**VALIDATE NUMBERS (MSN)** The use of MSN (Multiple Subscriber Number) enables you to attach different ISDN terminals, with different numbers, to the same physical ISDN telephone line. If available this service can be ordered from your telephone company. **ON:** When set to On only calls to the numbers specified in the Line Setup menus will be answered. **OFF:** When set to Off all calls will be answered.	MSN - Multiple Subscriber Number	All with ISDN-BRI
Control Panel > Network > ISDN > or ISDN, External, Leased E1/T1 > ISDN-BRI Settings > ADVANCED ISDN SETTINGS	**PARALLEL DIAL** Parallel Dial is used when setting up bonded calls. **ON:** Channels will be dialed and connected in parallel when setting up a BONDING call. **OFF:** Channels will be dialed one by one, which may increase the dialing time.	Bonded ISDN calls - The bridging of two or more ISDN channels to achieve higher data rates.	All with ISDN-BRI
Control Panel > Network > ISDN > or ISDN, External, Leased E1/T1 > ISDN-BRI Settings > ADVANCED ISDN SETTINGS	**SEND OWN NUMBERS** **ON:** The system will send its own numbers to the far end. **OFF:** The system will not send its own numbers to the far end, but please note that the network may still send your numbers to the far end.		All with ISDN-BRI
Control Panel > Network > ISDN > or ISDN, External, Leased E1/T1 > ISDN-BRI Settings > ADVANCED ISDN SETTINGS	**SENDING COMPLETE** Some PBX's and Telco switches need to see the Sending Complete message. **ON:** The system will send the ISDN message information element Sending Complete. **OFF:** The system will not send Sending Complete. Default is "Off"		All with ISDN-BRI
Control Panel > Network > ISDN, External, Leased E1/T1 > ISDN-PRI SETTINGS	**ISDN-PRI NUMBER RANGE** Enter the range of numbers for your ISDN-PRI line. If these numbers are programmed and MSN is On, only calls to these numbers will be answered. See also Validate numbers (MSN) in the Advanced ISDN-PRI Settings.		All with ISDN-PRI
Control Panel > Network > ISDN, External, Leased E1/T1 > ISDN-PRI SETTINGS	**ISDN-PRI SWITCH TYPE** Select the type of ISDN-PRI switch to which your system is connected. The ISDN-PRI Switch Type is not changed when Restoring Defaults.	Below is a list of common ISDN-PRI/T1 switches. Type / Manufacturer / ISDN-PRI Switch Type ATT 4ESS / AT&T / AT&T ISDN ATT 5ESS / AT&T, Lucent / AT&T ISDN or National ISDN* DMS 100 / Nortel Networks / National ISDN DMS 250 / Nortel Networks / National ISDN	All with ISDN-PRI

MENU ADDRESS	SETTINGS DESCRIPTION	INFORMATION	PRODUCT
Control Panel > Network > ISDN, External, Leased E1/T1 > ISDN-PRI Settings > CHANNEL HUNTING	**CHANNEL HUNTING** **MAX CHANNELS:** Set the maximum number of channels the system may use at any given time. Max Channels may be used for PRIs that are provisioned for a lower number of channels. **LOW CHANNEL:** Set the lowest numbered B-channel that may be used by the system when selecting channels for outgoing calls. Low Channel may be used for PRIs provisioned with specific requirements for B-channel usage. **HIGH CHANNEL:** Set the highest numbered B-channel that may be used by the system when selecting channels for outgoing calls. High Channel may be used for PRIs provisioned with specific requirements for B-channel usage **SEARCH:** Specifies where the system will start searching for available B-channels for outgoing calls. Search may be used for PRIs provisioned with specific requirements for B-channel usage. **HIGH:** The system will start searching for available B-channels at the specified High Channel number. **LOW:** The system will start searching for available B-channels at the specified Low Channel number.	The system will start searching for available B-channels at channel 31, since Search is set to High and High Channel is set to 31. The system will search for channels down to channel no 1, since Low Channel is set to 1. Furthermore; if the user tries to make a 31 channel call, the call will be established with 30 channels, since Max Channels is set to 30.	All with ISDN-PRI
Control Panel > Network > ISDN, External, Leased E1/T1 > ISDN-PRI Settings > LINE SETTINGS	**T1 CABLE LENGTH 1** Configures the ISDN-PRI Line Settings. Specify the distance (0-133 ft) of the CSU connected to the E1/T1 Port 1 on Codec 1.	CSU - Channel Service Unit	All with ISDN-PRI
Control Panel > Network > ISDN, External, Leased E1/T1 > ISDN-PRI Settings > LINE SETTINGS	**E1 CRC-4** E1 CRC-4 is used for most E1-PRI configurations. **ON:** Select On if E1 CRC-4 is supported by your E1 network equipment. **OFF:** Select Off if E1 CRC-4 is not supported by your E1 network equipment.	CRC - Cyclic Redundancy Check	All with ISDN-PRI
Control Panel > Network > ISDN, External, Leased E1/T1 > ISDN-PRI Settings > ADVANCED ISDN SETTINGS	**SUB ADDRESS** Using a Sub Address enables you to connect up to eight ISDN terminals to the same ISDN telephone number and line. The terminals are addressed by using different sub addresses. To call a terminal with a sub address, separate the ISDN telephone number and the sub address with a '*'. Example: **12345678*2** (up to four digit sub addresses are possible)	This service is dependent on your service provider and has limited access on some ISDN networks.	All with ISDN-PRI
Control Panel > Network > ISDN, External, Leased E1/T1 > ISDN-PRI Settings > ADVANCED ISDN SETTINGS	**VALIDATE NUMBERS (MSN)** The use of MSN (Multiple Subscriber Number) enables you to attach different ISDN terminals, with different numbers, to the same physical ISDN telephone line. If available this service can be ordered from your telephone company. **ON:** When set to On only calls to the numbers specified in the Line Setup menus will be answered. **OFF:** When set to Off all calls will be answered.	MSN - Multiple Subscriber Number	All with ISDN-PRI

MENU ADDRESS	SETTINGS DESCRIPTION	INFORMATION	PRODUCT
Control Panel > Network > ISDN, External, Leased E1/T1 > ISDN-PRI Settings > ADVANCED ISDN SETTINGS	**PARALLEL DIAL** Parallel Dial is used when setting up bonded calls. **ON:** Channels will be dialed and connected in parallel when setting up a BONDING call. **OFF:** Channels will be dialed one by one, which may increase the dialing time.	Bonded ISDN calls - The bridging of two or more ISDN channels to achieve higher data rates.	All with ISDN-PRI
Control Panel > Network > ISDN, External, Leased E1/T1 > ISDN-PRI Settings > ADVANCED ISDN SETTINGS	**SEND OWN NUMBERS** **ON:** The system will send its own numbers to the far end. **OFF:** The system will not send its own numbers to the far end, but please note that the network may still send your numbers to the far end.		All with ISDN-PRI
Control Panel > Network > ISDN, External, Leased E1/T1 > ISDN-PRI Settings > ADVANCED ISDN SETTINGS	**SENDING COMPLETE** Some PBX's and Telco switches need to see the Sending Complete message. **ON:** The system will send the ISDN message information element Sending Complete. **OFF:** The system will not send Sending Complete. Default is "Off"		All with ISDN-PRI
Control Panel > Network > ISDN, External, Leased E1/T1 > ISDN-PRI Settings > ADVANCED ISDN-PRI SETTINGS	**NSF CODE VIDEO CALL** Network Service Facility (NSF) is a non-standard facility and your network provider may require a service selection in your ISDN configuration. **ON:** Set Mode to On and enter the NSF Service Code. **OFF:** Set Mode to Off to disable the NSF Service Code.	NSF - Network Service Facility	All with ISDN-PRI
Control Panel > Network > ISDN, External, Leased E1/T1 > ISDN-PRI Settings > ADVANCED ISDN-PRI SETTINGS	**NSF CODE TELEPHONE CALL** Network Service Facility (NSF) is a non-standard facility and your network provider may require a service selection in your ISDN configuration. **ON:** Set Mode to On and enter the NSF Service Code. **OFF:** Set Mode to Off to disable the NSF Service Code.	NSF - Network Service Facility AT&T offers several digital switched services. These include SDN with service code 1 and ACCUNET with service code 6. For more infor see NSF Service Codes in Appendices.	All with ISDN-PRI
Control Panel > Network > ISDN, External, Leased E1/T1 > LEASED E1/T1 SETTINGS	**CALL CONTROL** Set the maximum number of channels the system may use at any Call Control. **AUTO:** When Auto is selected, the system will automatically initiate a connection as soon as it detects that the far end tries to make a call. This mode is also commonly known as "data triggered" mode, because the existence of certain data patterns on the line triggers a connection. **MANUAL:** When manual is selected, the user has to explicitly issue a dial command to make the system connect to the far end system. Receiving an incoming call is not possible.		All with leased line
Control Panel > Network > ISDN, External, Leased E1/T1 > LEASED E1/T1 SETTINGS	**NETWORK INTERFACE** Indicates if the network is of type E1 (30 channels) or T1 (24 channels). **E1:** Default for PAL versions **T1:** Default for NTSC versions.		All with leased line

MENU ADDRESS	SETTINGS DESCRIPTION	INFORMATION	PRODUCT
Control Panel > Network > ISDN, External, Leased E1/T1 > LEASED E1/T1 SETTINGS	**MAX CHANNELS** Indicates the maximum number of channels the codec is allowed to use on the E1/T1 interface. **E1:** Maximum 30 channels when E1 is selected. **T1:** Maximum 24 channels when T1 is selected.		All with leased line
Control Panel > Network > ISDN, External, Leased E1/T1 > LEASED E1/T1 SETTINGS	**START CHANNEL** Indicates the first E1/T1 channel the codec is allowed to use. This setting might be used if the E1/T1 line is shared with other equipment.		All with leased line
Control Panel > Network > ISDN, External, Leased E1/T1 > LEASED E1/T1 SETTINGS	**T1 LINE CODING** **B8ZS:** Indicates how the signals on the line should be coded. **B8ZS-RESTRICTED:** If parts of the line between the systems use restricted coding, this should be selected.	B8ZS - Binary 8 Zeros Substitution **NOTE!** All settings must be identical on both sides of the Leased E1/T1 connection.	All with leased line
Control Panel > Network > ISDN, External, Leased E1/T1 > Leased E1/T1 Settings LINE SETTINGS	**T1 CABLE LENGTH 1** Configures the ISDN-PRI Line Settings. Specify the distance (0-133 ft) of the CSU connected to the E1/T1 Port 1 on Codec 1.	CSU = Channel Services Unit	All with leased line
Control Panel > Network > ISDN, External, Leased E1/T1 > Leased E1/T1 Settings LINE SETTINGS	**E1 CRC-4** E1 CRC-4 is used for most E1-PRI configurations. **ON:** Select On if E1 CRC-4 is supported by your E1 network equipment. **OFF:** Select Off if E1 CRC-4 is not supported by your E1 network equipment.	CRC - Cyclic Redundancy Check	All with leased line

MENU ADDRESS	SETTINGS DESCRIPTION	INFORMATION	PRODUCT
Control Panel > Network > ISDN, External, Leased E1/T1 > EXTERNAL NETWORK SETTINGS	CALL CONTROL **RS366:** Dialing is the only dialing protocol supported and would normally be used together with network clocking RS449/V.35 Compatible when the external equipment uses RS366 ports. **RS366 ADTRAN IMUX:** The RS366 ADTRAN offers extra usability when dialing RS366 via an ADTRAN IMUX. This dialing scheme will map the call type and bandwidth selection to ADTRAN specific suffixes to the dialed number. Should only be used when connected to an ADTRAN IMUX. The Adtran ISU 512 uses the following suffixes <Number>#C#R #C = Call Type #2 = audio #3 = 56 kbps #4 = 64 kbps #R = Channel Rate #0 = 2xH221 (2x56/64 kbps) #1 to 8 = the Call Rate. **RS366 CUSTOM IMUX:** uses a custom prefix/suffix table which describes the available bandwidths. The prefixes/suffixes are set from the Web Interface or Command Line interface. The user (administrator) shall be able to specify a IMUX prefix/suffix table for the following bandwidths (kbps): 64, 64 Restrict, 128, 128 Restrict, 192, 192 Restrict, 256, 256 Restrict, 320, 320 Restrict, 384, 384 Restrict, 512, 512 Restrict, 768, 768 Restrict, 1152, 1152 Restrict, 1472, 1472 Restrict, 1920, 1920 Restrict. **LEASED:** Line is a non-dialing protocol and should be used when two codecs are connected in a point-to-point connection. Use Leased Line when the handshaking signals DTR and CD are available. DTR and CD correspond to the X.21 network's C and I signals. **DATA:** Triggered mode uses TxData (transmit data), RxData (receive data) and clock signals only. Use Data Triggered when no handshake signals are available. **MANUAL:** should be used when no handshake signals are available and the external equipment requires a constantly connected line.	Before using the system together with external network equipment, you must specify the network parameters. The system has support for up to 2 Mbps (depending on the Bandwidth key loaded) using the External Network (RS449/V.35/X.21) interface. Universal IMUX Support with RS366 Custom IMUX. When placing calls over External Network (V.35) using RS366 callcontrol, the call bandwidth is signaled to the IMUX by adding prefixes and suffixes to the actual dial string (i.e. the number to call). The prefixes/suffixes corresponding to specific bandwidths varies depending on the IMUX manufacturer. Using prefix/suffix - The Universal IMUX feature gives the user (administrator) the ability to configure the prefixes/suffixes corresponding to the supported bandwidths for the specific IMUX in use. To do that, choose the RS366 Custom IMUX from the menu and add the prefixes/suffixes table from the Web Interface or a Command Line interface. A prefix/suffix has a maximum length of 12 characters. The added prefixes/suffixes will not be included when the number is transferred to the call log NOTE: The physical interface on External Networks is a non-standard 26 pin connector. Special cables are required, see Interfaces in the Peripheral Equipment section for cable pin outs.	6000 3000Net
Control Panel > Network > ISDN, External, Leased E1/T1 > EXTERNAL NETWORK SETTINGS	NETWORK CLOCKING The Network Clocking setting specifies the number of physical external clock signals. **RS449/V35 COMPATIBLE:** Use this option when the external equipment provides two clock signals, one for transmit and one for receive. The difference between RS449 and V35 is only the cable. **X21 COMPATIBLE:** Use this option when the external equipment provides one common clock signal for both transmits and receive.		6000 3000Net
Control Panel > Network > ISDN > or ISDN, External, Leased E1/T1 > H.331 SETTINGS	H.331 The H.331 Broadcast Mode decides the negotiation quality, dependent on if there is a one-way or two-way communication. **ON:** Used when broadcasting a videoconference from one site to many others, e.g. via satellite, where there is no possibility to negotiate quality between the receivers and the originator due to one-way communication. **OFF:** Standard two-way communication with quality negotiation between both sides.		Systems with ISDN-BRI or ISDN-PRI

MENU ADDRESS	SETTINGS DESCRIPTION	INFORMATION	PRODUCT
Control Panel > Network > LAN Settings > IP SETTINGS	**IP PROTOCOL** The Internet Protocol (IP) settings are used for communicating data across a network. Set which Internet Protocols are supported. **IPV4:** IP version 4 supported. **IPV6:** IP version 6 supported. IP Address, IP Subnet Mask, and Gateway will be disabled. **BOTH:** Both IP version 4 and IP version 6 supported.	Restart System After Changes Changes in IP Settings menu will have no effect until the system is restarted.	All
Control Panel > Network > LAN Settings > IP SETTINGS	**IP ASSIGNMENT** DHCP (Dynamic Host Configuration Protocol) can be selected when a DHCP server is present. Note that for IPv6, the DHCP server is used for NTP and DNS Server Addresses. **DHCP:** The system's adresses are automatically assigend by the DHCP server. Thereby the IP-address, IP-subnet mask and Gateway are not used and grayed out. **STATIC:** The system's IP-address, IP-subnet mask and Gateway must be specified in the respective address fields. Options available via DHCP ▪ IP Address ▪ Subnetmask ▪ Gateway ▪ DNS servers ▪ NTP server ▪ SIP server ▪ MTU size, DHCP Option 26 (from F6) ▪ External Manager 1. If the DHCP Option 242 is returned in the DHCP response from the DHCP server the system will interpret this as the External Manager address to use. 2. Normally the External Manager Address will be the TMS address.	Restart System After Changes Changes in IP Settings menu will have no effect until the system is restarted.	All
Control Panel > Network > LAN Settings > IP SETTINGS	**IP ADDRESS** IP Address defines the network address of the codec. This address is only used in Static mode. In DHCP-mode, the address is assigned automatically. The IP Address is displayed on the Welcome Menu and in System Information in the Diagnostics menu.	Restart System After Changes Changes in IP Settings menu will have no effect until the system is restarted.	All
Control Panel > Network > LAN Settings > IP SETTINGS	**IP SUBNET MASK** IP Subnet Mask defines which subnet the IP address belongs to in the network. This address is only used in static mode. Your LAN administrator will provide the correct value for this field.	Restart System After Changes Changes in IP Settings menu will have no effect until the system is restarted.	All

MENU ADDRESS	SETTINGS DESCRIPTION	INFORMATION	PRODUCT
Control Panel > Network > LAN Settings > IP SETTINGS	**GATEWAY** When using DHCP, the default gateway address will be set automatically. If the LAN utilizes static IP addresses, the IP address, subnet mask, and default gateway must be specified by the LAN administrator.	Restart System After Changes Changes in IP Settings menu will have no effect until the system is restarted.	All
Control Panel > Network > LAN Settings > IP SETTINGS	**ETHERNET SPEED** Set the speed of the Ethernet network. **AUTO:** The codec will auto-detect the speed and half/full duplex on the LAN. **10/HALF:** The codec will connect to the LAN using 10 Mbps speed / Half Duplex. **10/FULL:** The codec will connect to the LAN using 10 Mbps speed / Full Duplex. **100/HALF:** The codec will connect to the LAN using 100 Mbps speed / Half Duplex. **100/FULL:** The codec will connect to the LAN using 100 Mbps speed / Full Duplex.	Restart System After Changes Changes in IP Settings menu will have no effect until the system is restarted.	All
Control Panel > Network > LAN Settings > IP SETTINGS	**IP ACCESS PASSWORD** By setting an IP Access Password on the system, all access to the system using IP (Telnet, FTP and WEB) requires a password. The default IP Access Password is TANDBERG (NOTE: It is case sensitive!). Maximum length is 16 characters. The IP Access Password can also be set from the Control Panel > Security Settings > IP Access Password menu.	Restart System After Changes Changes in IP Settings menu will have no effect until the system is restarted.	All
Control Panel > Network > LAN Settings > IP Settings > DNS SETTINGS	**DNS SERVER 1 - 5** Set the DNS - Domain Name Server - Address to define the network addresses for DNSs. Up to 5 addresses may be specified. If the network addresses are unknown, please contact your LAN administrator or the Internet Service Provider. DNS Server Address Format: IP Address: `10.0.0.2` DNS Domain Name: `example.com`	Restart System After Changes Changes in IP Settings menu will have no effect until the system is restarted. DNS - Domain Name Server	All
Control Panel > Network > LAN Settings > IP Settings > DNS SETTINGS	**DNS DOMAIN NAME** DNS Domain Name is the default domain name suffix which is added to unqualified names. Example: If the DNS Domain Name is `company.com` and the name to lookup is `videosystem`, this will result in the DNS lookup `videosystem.company.com`.	Restart System After Changes Changes in IP Settings menu will have no effect until the system is restarted.	All

MENU ADDRESS	SETTINGS DESCRIPTION	INFORMATION	PRODUCT
Control Panel > Network > LAN Settings > H.323 SETTINGS	**H.323 CALL SETUP** H.323 Call Setup defines whether to use a Gatekeeper, Call Manager or Direct calling. **GATEKEEPER:** The system will use a Gatekeeper to make a H.323 call. When you select this option the Gatekeeper Settings menu is enabled for configuration. **CALL MANAGER**: The system will use a Call Manager to make a H.323 call. When you select this option the Call Manager Settings menu is enabled for configuration. **DIRECT:** An IP-address must be dialled in order to make a H.323 call. The system will not use a Gatekeeper or Call Manager		All
Control Panel > Network > LAN Settings > H.323 SETTINGS	**H.323 PREFIX** When dialing a number prefixed with digits specified by H.323 Prefix, and with Network set to Auto, an H.323 call will be placed. Example: If H.323 Prefix is set to "`555`" and Network is set to `Auto`, then dialing "`55582`" will select H.323.		All
Control Panel > Network > LAN Settings > H.323 Settings > GATEKEEPER SETTINGS	**E.164 ALIAS** When using a Gatekeeper, the system will send a message to the Gatekeeper containing both the E.164 Alias and the H.323 ID of the system. This is the E.164 address of the system, according to the numbering plan implemented in the Gatekeeper. The E.164 Alias is equivalent to a telephone number, sometimes combined with access codes. E.164 Alias can have a maximum of 15 digits and valid characters are 0-9, * and #. Example: `90476159`	E.164 is an ITU-T recommendation which defines the international public telecommunication numbering plan used in the public switched telephone networks and some other data networks.	
Control Panel > Network > LAN Settings > H.323 Settings > GATEKEEPER SETTINGS	**H.323 ID** When using a Gatekeeper, the system will send a message to the Gatekeeper containing both the E.164 Alias and the H.323 ID of the system. The H.323 ID of the system may be specified here. The System Name is used if no H.323 ID is entered. Example: "`Alice Wonderland`", "`System 01`"	H.323 is an umbrella recommendation from the ITU-T, that defines the protocols to provide audio-visual communication sessions on any packet network.	
Control Panel > Network > LAN Settings > H.323 Settings > GATEKEEPER SETTINGS	**DISCOVERY** **AUTO:** The system will automatically try to register to any available Gatekeeper. If a Gatekeeper responds to the request sent from the codec within 30 seconds this specific Gatekeeper will be used. This requires auto discovery on the Gatekeeper as well. If no Gatekeeper responds, the system will not use a Gatekeeper for making H.323 calls and hence an IP-address must be specified manually. **MANUAL:** The system will use a specific Gatekeeper identified by the Gatekeeper's IP-address.		All

MENU ADDRESS	SETTINGS DESCRIPTION	INFORMATION	PRODUCT
Control Panel > Network > LAN Settings > H.323 Settings > GATEKEEPER SETTINGS	**IP ADDRESS** Defines the Gatekeeper IP-address. If your system is part of a TANDBERG Expressway™ firewall traversal solution and is placed outside the firewall, you should register the IP address of your Border Controller as the Gatekeeper IP address and set H.323 Call Setup to Gatekeeper. Requires the following configurations on the video system: ▪ H.323 Call Setup: Gatekeeper ▪ Gatekeeper Discovery: Manual		All
Control Panel > Network > LAN Settings > H.323 Settings > GATEKEEPER SETTINGS	**AUTHENTICATION MODE** **AUTO:** If Authentication Mode is set to Auto and the Gatekeeper indicates that it requires authentication, the endpoint will automatically try to authenticate itself to the Gatekeeper. **OFF:** If Authentication Mode is set to Off the system will not try to authenticate itself to a Gatekeeper, but will still try a normal registration.		All
Control Panel > Network > LAN Settings > H.323 Settings > GATEKEEPER SETTINGS	**AUTHENTICATION ID & AUTHENTICATION PASSWORD** The system sends the Authentication ID and the Authentication Password to a Gatekeeper for authentication. Requires that the Authentication Mode is set to Auto. The authentication is a one way authentication from the endpoint system to a Gatekeeper, i.e. the endpoint is authenticated to the Gatekeeper. If the Gatekeeper indicates that no authentication is required, the endpoint will still try to register.		All
Control Panel > Network > LAN Settings > H.323 Settings > CALL MANAGER SETTINGS	**CALL MANAGER EXTENSION** If Call Manager was enabled in the H.323 Call Setup, you may enter a call manager extention in this field. Example: `524036`		
Control Panel > Network > LAN Settings > H.323 Settings > CALL MANAGER SETTINGS	**CALL MANAGER IP** If Call Manager was enabled in the H.323 Call Setup, enter the IP Address to the Call Manager in this field. Example: `10.0.0.30`		All

MENU ADDRESS	SETTINGS DESCRIPTION	INFORMATION	PRODUCT
Control Panel > Network > LAN Settings > H.323 Settings > ADVANCED H.323 SETTINGS	**NAT** NAT support in the videoconferencing system enables proper exchange of audio/video data when connected to an external videoconferencing system (when the IP traffic goes through a NAT router). **OFF:** The system will signal the real IP Address. **ON:** The system will signal the configured "NAT Address" in place of its own IP-address within Q.931 and H.245. When NAT is On, the NAT Server Address will be shown in the startup-menu as: `My IP Address: 10.0.2.1` **AUTO:** The system will try to determine if the "NAT Address" or the real IP-address should be used within signaling. This is done to make it possible to place calls to endpoints on the LAN as well as endpoints on the WAN.	Note! The Advanced H.323 Settings only have effect if they are supported by your IP infrastructure.	All
Control Panel > Network > LAN Settings > H.323 Settings > ADVANCED H.323 SETTINGS	**NAT ADDRESS** This must be the external/global IP-address to the router with NAT support. Packets sent to the router will then be routed to the system. In the router, the following ports must be routed to the system's IP-address: ▪ Port 1720 ▪ Port 5555-5574 ▪ Port 2326-2485	Note! The Advanced H.323 Settings only have effect if they are supported by your IP infrastructure.	All
Control Panel > Network > LAN Settings > H.323 Settings > ADVANCED H.323 SETTINGS	**RSVP** **AUTO:** Resource Reservation Protocol enables the system to request the optimum amount of bandwidth for the duration of an IP video conference. **OFF:** Resource Reservation Protocol is switched Off.	Note! The Advanced H.323 Settings only have effect if they are supported by your IP infrastructure.	All
Control Panel > Network > LAN Settings > H.323 Settings > ADVANCED H.323 SETTINGS	**H.323 PORTS** **STATIC:** When selecting static H.323 ports for TCP connections the ports 5555 - 5574 will be used for Q.931 and H.245 respectively. **DYNAMIC:** The system will allocate which ports to use when opening a TCP connection. The reason for doing this is to avoid using the same ports for subsequent calls, as some firewalls consider this as a sign of attack. When Dynamic is selected, the H.323 ports used are from 11000 to 65535. Once 65535 is reached they restart again at 11000.	Note! The Advanced H.323 Settings only have effect if they are supported by your IP infrastructure. Save and Restart The system needs to be restarted after changing the H.323 ports.	All
Control Panel > Network > LAN Settings > SIP SETTINGS	**SIP MODE** SIP - Session Initiation Protocol. SIP is one of the leading signaling protocols for Voice over IP. **ON:** Setting the SIP mode to On will enable the system for incoming and outgoing SIP calls. **OFF:** Setting the SIP mode to Off will disable incoming and outgoing SIP calls from the system.	Save and Restart The system need to be restarted if SIP mode is turned On. Turning SIP Off will make the video system reject outgoing and incoming calls.	All
Control Panel > Network > LAN Settings > SIP SETTINGS	**DISPLAY NAME** The Display Name of the SIP Address (URI) is usually a full name or system name. Examples: `"Alice Wonderland", "System 01"`		All

MENU ADDRESS	SETTINGS DESCRIPTION	INFORMATION	PRODUCT
Control Panel > Network > LAN Settings > SIP SETTINGS	**SIP ADDRESS (URI)** The SIP URI or number is used to address the video system. This is the same URI that is registered and used by the SIP services to route inbound calls to the video system. An URI is a compact string of characters used to identify or name a resource. Example: "sip:alice@example.com", "1234", "1234@example.com"	URI - Uniform Resource Identifier	All
Control Panel > Network > LAN Settings > SIP Settings SIP SERVER SETTINGS	**SERVER DISCOVERY** The SIP Server helps the video system to route calls to the destination. It can also authenticate, authorize services for the video system. **AUTO:** The SIP Server address is retrieved from the DHCP service, if available. **MANUAL:** The manually configured SIP Server address will be used.	DHCP - Dynamic Host Configuration Protocol	All
Control Panel > Network > LAN Settings > SIP Settings SIP SERVER SETTINGS	**SERVER ADDRESS** The SIP Address is the manually configured outbound proxy for the signaling. It may also be the registrar, or it will route the registrations to the registrar. It is possible to use a fully qualified domain name, or an IP address. The default port is 5060 for TCP and UDP, but another one can be provided. Examples: "**sipserver.example.com**", "sipserver.example.com:5060", "**10.0.0.2**", "10.0.0.2:5061"		All
Control Panel > Network > LAN Settings > SIP Settings SIP SERVER SETTINGS	**SERVER TYPE** Select the SIP Server type. **AUTO:** Should be used when registering to standard SIP servers like OpenSer. **NORTEL:** Must be used when registering to a Nortel MCS 5100 or MCS 5200 PBX. **MICROSOFT:** Must be used when registering to a Microsoft LCS or OCS server. **CISCO:** Must be used when registering to a Cisco CallManager version 5 or later. **ALCATEL:** Must be used when registering to a Alcatel-Lucent OmniPCX Enterprise R7 or later. **SIEMENS:** Must be used when registering to a Siemens HiPath 8000. **TELIO:** Must be used in combination with a Telio subscription (www.telio.no). **EXPERIMENTAL:** Can be used if auto is not working **NOTE!** This mode is for testing purposes only.		All
Control Panel > Network > LAN Settings > SIP Settings SIP SERVER SETTINGS	**TRANSPORT** Select the transport protocol to be used over the LAN. **AUTO:** The system will try to connect using transport protocols in the following order: TLS, TCP, UDP. **TCP:** The system will always use TCP as the default transport method. **UDP:** The system will always use UDP as the default transport method. **TLS:** The system will always use TLS as the default transport method. For TLS connections a SIP CA-list can be uploaded using the web interface. If no such CA-list is available on the system then anonymous Diffie Hellman will be used.	TCP - Transmission Control Protocol UDP - User Datagram Protocol TLS - Transport Layer Security SIP CA List - SIP Proxy CA List (PEM format)	All

MENU ADDRESS	SETTINGS DESCRIPTION	INFORMATION	PRODUCT
Control Panel > Network > LAN Settings > SIP Settings SIP SERVER SETTINGS	**SIP VERIFY TLS** For TLS connections a CA-list can be uploaded from the web interface. **ON:** Set to On to verify TLS connections. Only TLS connections to servers, whom x.509 certificate is validated against the CA-list, will be allowed. **OFF:** Set to Off to allow TLS connections without verifying them. The TLS connections are allowed to be set up without verifying the x.509 certificate received from the server against the local CA-list. This should typically be selected if no SIP CA-list has been uploaded.	TLS (Transport Layer Security) - is a transport protocol used over LAN. CA - Certificate authority, issuer of (root) certificates.	All
Control Panel > Network > LAN Settings > SIP Settings AUTHENTICATION	**AUTHENTICATION SETTINGS** Currently NTLM authentication is supported for Microsoft LCS server. Standard digest authenication is supported. For Microsoft LCS support NTLM authication is also provided **USER NAME:** This is the user name part of the credentials used to authenticate toward the SIP Server. **PASSWORD:** This is the password part of the credentials used to authenticate toward the SIP Server.	Read about Current RFC's and Drafts Supported in the Appendices section.	All
Control Panel > Network > LAN Settings > SIP Settings SIP NAT TRAVERSAL	**ICE MODE** The system support ICE ("Interactive Connectivity Establishment") NAT traversal, and TURN ("Traversal Using Relays around NAT") media relays. **ON:** The system will choose between the available servers in the following order: 3. Local 4. STUN / public IP 5. TURN / Media redirection **OFF:** Set to Off to disable ICE.		
Control Panel > Network > LAN Settings > SIP Settings SIP NAT TRAVERSAL	**MNS MODE** The MNS ("Media Network Services") mode operates similarly to the ICE mode, but the system will prioritize use of the TURN server: 6. Local 7. TURN / Media redirection Media packets will be sent directly only to endpoints determined to be on the local LAN. Media packets to all other destinations will be sent through the TURN server. The MNS mode is typically used to improve the network transport quality. There are commercial services available providing dedicated wide-area video networks, see e.g. "http://www.medianetworkservices.com" **ON:** Setting the MNS mode to On will enable and prioritize media redirection through the dedicated network identified by the TURN server. **OFF:** Normal operation mode (standard ICE)	**NOTE!** The MNS Mode requires that the ICE Mode is set on. It also requires a valid TURN server address and authentication.	

MENU ADDRESS	SETTINGS DESCRIPTION	INFORMATION	PRODUCT
Control Panel > Network > LAN Settings > SIP Settings SIP NAT TRAVERSAL	**FORCE TURN** In this mode media is always sent using the TURN relay. One usage for this mode is media relaying from installations on a public IP network. **ON:** Setting the Force TURN mode to On will force media redirection through the dedicated network identified by the TURN server. **OFF:** Normal operation mode (standard ICE or MNS)	NOTE! The Force TURN mode requires that the ICE Mode is set on. It also requires a valid TURN server address and authentication.	
Control Panel > Network > LAN Settings > SIP Settings SIP NAT TRAVERSAL	**TURN SERVER** Address of the TURN server for data redirection. A fully qualified domain name or an IP address can be used. Default port 3478 is assumed. Optional port can be provided using ":nnnnn" notation. Examples: "`93.93.102.102:7000`", "`turn.mnsbone.net`".		
Control Panel > Network > LAN Settings > SIP Settings SIP NAT TRAVERSAL	**SIP AUTHENTICATION FOR TURN** If your TURN user credentials are the same as for the SIP authentication (Network > LAN Settings > SIP Settings > Authentication), you can check mark this box to use the same user name and password. If your TURN user credentials are different you must enter your TURN user name and TURN password. **USER NAME:** This is the user name part of the credentials used to authenticate toward the TURN Server. **PASSWORD:** This is the password part of the credentials used to authenticate toward the TURN Server.		
Control Panel > Network > LAN Settings > WIRELESS LAN SETTINGS	**SSID** SSID* - Service Set Identification. Defines a local network ID for this wireless region. The SSID must be the same for all endpoints and the access point. An endpoint will find the access point if the SSID is correct, however if the encryption key is faulty it will not transmit any data. Example: "`WLANNETWORK`" NOTE! The PC card/PCMCIA-card used must comply with the relevant regulations for such cards in the country where it is used. The unit must be supplied by power supply (AC-DC adaptor) powerbox SPN-270-12, which complies with the requirements for limited power source according to IEC/EN 60950.	Read more about Wireless Network Adapters in the section Using the system. * The wireless card option is not supported in the current version of the Compass/Utility MXP.	All with WLAN
Control Panel > Network > LAN Settings > WIRELESS LAN SETTINGS	**COMMUNITY** Community* (optional) can be used when connecting to an access point where the SSID is the same. The Community name can be up to 32 characters long. Example: "`Unit2`"	* The wireless card option is not supported in the current version of the Compass/Utility MXP.	All with WLAN
Control Panel > Network > LAN Settings > WIRELESS LAN SETTINGS	**WLAN MODE** Defines the WLAN Mode*. Make sure the corresponding settings are programmed into the access point. **ADHOC:** Used when not communicating with an access point. **MANAGED:** Used when communication is made through an access point.	* The wireless card option is not supported in the current version of the Compass/Utility MXP.	All with WLAN

MENU ADDRESS	SETTINGS DESCRIPTION	INFORMATION	PRODUCT
Control Panel > Network > LAN Settings > Wireless LAN Settings > ENCRYPTION	**ENCRYPTION** Select Encryption if you want to use WEP encryption on your Wireless LAN connection. Increased encryption level will decrease performance. NOTE: An endpoint will find the access point if the SSID is correct, however if the encryption key is faulty it will not transmit any data. **OFF:** Select Off to disable WEP encryption on your Wireless LAN connection **64 BIT:** Select 64 bit to enable 64 bit WEP encryption on your Wireless LAN connection **128 BIT:** Select 128 bit to enable 128 bit WEP encryption on your Wireless LAN connection		All with WLAN
Control Panel > Network > LAN Settings > Wireless LAN Settings > ENCRYPTION	**USE KEY** Select which of the keys shown below you want to use. The key you select must have a valid Encryption Key, or no data will be transmitted. Contact your network administrator to get a valid encryption key.	NOTE: An endpoint will find the access point if the SSID is correct, however if the encryption key is faulty it will not transmit any data.	All with WLAN
Control Panel > Network > LAN Settings > Wireless LAN Settings > ENCRYPTION	**KEY 1-4** Enter the WEP encryption keys for your Wireless LAN connection. Encryption using characters The 64-bit keys can consist of a leading star (*) and 5 characters. Example: "`*mykey`" The 128-bit key can consist of a leading star (*) and 13 characters. Start with a * and then the text. Example: "`*secretkeyhome`" Encryption using Hexadecimal Numbers The 64-bit keys can consist of 10 hexadecimal digits. Example: "`de01ad4dbe`" The 128-bit key can consist of 26 hexadecimal digits. Example: "`de01ad4dbede01ad4dbede01ad`"	NOTE: An endpoint will find the access point if the SSID is correct, however if the encryption key is faulty it will not transmit any data.	All with WLAN
Control Panel > Network > LAN Settings > SNMP SETTINGS	**SNMP TRAP HOST** Identifies the IP-address of the SNMP Manager. SNMP is used to monitor and configure different entities in a network, like routers, servers, switches, projectors, etc. The system's SNMP Agent (in the codec) responds to requests from SNMP Managers (a PC program etc.). SNMP Traps are generated by the SNMP Agent to inform the SNMP Manager about important events. Can be used to send event created messages to the SNMP agent about different events like: system reboot, system dialing, system disconnecting, MCU call, packet loss etc. Traps can be sent to multiple SNMP Trap Hosts. Enter the IP address of up to three SNMP Managers. All traps will then be sent to the hosts listed. To monitor you can use TMS, or other types of SNMP agents like HP OpenView. By using the SNMP agent, you can send SNMP packets to the unit to configure the system. However TANDBERG will only allow a couple of things to be configured like: Contact name, location and system name.	SNMP - Simple Network Management Protocol, SNMP Ver 1.	All

MENU ADDRESS	SETTINGS DESCRIPTION	INFORMATION	PRODUCT
Control Panel > Network > LAN Settings > SNMP SETTINGS	**SNMP COMMUNITY** SNMP Community names are used to authenticate SNMP requests. SNMP requests must have a 'password' (case sensitive) in order to receive a response from the SNMP Agent in the codec. The default password is "`public`"	If you have the Cisco TelePresence Management Suite (TMS) you must make sure the same SNMP Community is configured there too. **NOTE!** The SNMP Community ('password') is case sensitive.	All
Control Panel > Network > LAN Settings > IP SERVICES	**HTTP** HTTP (Hypertext Transfer Protocol) is a web-interface for system management, call management such as call transfer, diagnostics and software uploads **ON:** The HTTP protocol is enabled. **OFF:** The HTTP protocol is disabled.	HTTP - Hypertext Transfer Protocol	All
Control Panel > Network > LAN Settings > IP SERVICES	**HTTPS** HTTPS (Hypertext Transfer Protocol over Secure Socket Layer) is a Web protocol that encrypts and decrypts user page requests as well as the pages that are returned by the Web server **ON:** The HTTPS protocol is enabled. **OFF:** The HTTPS protocol is disabled.	HTTPS - Hypertext Transfer Protocol Secure over Socket Layer	All
Control Panel > Network > LAN Settings > IP SERVICES	**DDDP** Turns support for AMX's Dynamic Device Discovery Protocol (DDDP) On or Off. **ON:** If set to On the system will transmit a Beacon string identifying the system in random intervals between 30 and 60 seconds. The Beacon is transmitted as a UDP packet to 239.255.250.250 on port 9131. **OFF:** The DDDP is disabled.	DDDP - Dynamic Device Discovery Protocol from AMX	6000 3000
Control Panel > Network > LAN Settings > IP SERVICES	**NTP IP** The NTP (Network Time Protocol) is used to synchronize the time of the system to a reference time server (the NTP time server). This is a requirement for proper operation if the H.235 authentication is implemented. The system will use the time to timestamp messages transmitted to Gatekeepers or Border Controllers that requires H.235 authentication. It is also used for timestamping Placed Calls, Missed Calls and Received Calls. **AUTO:** When set to Auto, the video system will use the NTP address provided by the DHCP server. The server will be queried every 24th hour. **MANUAL:** When set to manual, you will have to enter the IP address of the NTP server manually. The server will be queried every 24th hour.	**NOTE!** The NTP time server synconization is a requirement for proper operation if the H.235 authentication is implemented. NTP - Network Time Protocol H.235 - Provides authentication, privacy and integrity for H.323 based systems.	All
Control Panel > Network > LAN Settings > IP SERVICES	**IP ADDRESS** If the NTP IP mode is set to Manual; enter the IP Address or DNS name for obtaining the date and time information from the NTP time server.	Example: IP Address: 10.0.0.1 DNS Name: time.eu.company.int	All

MENU ADDRESS	SETTINGS DESCRIPTION	INFORMATION	PRODUCT
Control Panel > Network > LAN Settings > QUALITY OF SERVICE	**QOS TYPE** Select a method and configure the settings for that method. The QoS settings must be supported by the infrastructure. This is a one time configuration by the network administrator, if the network supports QoS. **OFF:** When set to Off no QoS method is used. **IP PRECEDENCE:** Select IP Precedence and then go to IP Precedence Video and IP Precedence Telephony sub-menus to configure the settings. **DIFFSERV:** Select Diffserv and then go to Diffserv Video and Diffserv Telephony sub-menus to configure the settings.	QoS - Quality of Service - Defines the QoS method which handles the priority of audio, video and data in the network. IP Precedence - With IP Precedence a value (0-7) can be set to allow certain traffic to gain priority over other types of traffic in a network. DiffServ - Differentiated Services is a computer networking architecture that specifies a simple, scalable and coarse-grained mechanism for classifying, managing network traffic and providing quality of service (QoS) guarantees on modern IP networks.	All
Control Panel > Network > LAN Settings > Quality Of Service > IP PRECEDENCE VIDEO	**AUDIO, VIDEO, DATA, SIGNALING** The IP Precedence Video settings are used to define which priority audio, video, data and signaling should have in the network. Select a priority for each type of packet. The higher the number, the higher the priority. **OFF:** No priority is selected. **AUTO:** will provide the following priority: Audio 4 Video 4 Data 3 Signaling 6 **CUSTOM:** Select the preferred priority for the Audio, Video, Data and Signaling. Values from 1 - 7.		All
Control Panel > Network > LAN Settings > Quality Of Service > IP PRECEDENCE VIDEO	**IP TYPE OF SERVICE (TOS)** Select the preferred routing path in the network. **DELAY:** The router will select a routing path in the network to minimize the delay. **THROUGHPUT:** The router will select a routing path in the network to maximize the throughput. **RELIABILITY:** The router will select a routing path in the network to maximize the reliability. **COST:** The router will select a routing path in the network to minimize the cost. **OFF:** Routing path not used.	The Quality of Service settings helps a router select a routing path in the network, for the audio, video, data and signaling, when multiple paths are available.	All
Control Panel > Network > LAN Settings > Quality Of Service > IP PRECEDENCE TELEPHONE	**AUDIO** The IP Precedence Telephone setting is used to define which priority audio should have in the network for telephone calls. Select a priority for each type of packet. The higher the number, the higher the priority. **OFF:** No priority is selected. **AUTO:** will provide the following priority 4 to Audio packets. **CUSTOM:** Select the preferred priority for the Audio, Video, Data and Signaling. Values from 1 - 7.		All

MENU ADDRESS	SETTINGS DESCRIPTION	INFORMATION	PRODUCT
Control Panel > Network > LAN Settings > Quality Of Service > DIFFSERV VIDEO	**AUDIO, VIDEO, DATA, SIGNALING** Enter a priority, which ranges from 0 to 63 for each type of packets. The higher the number, the higher the priority. **AUDIO:** Recommended value is DiffServ Code Point (DSCP) AF41, which equals the value 34 **VIDEO:** Recommended value is DiffServ Code Point (DSCP) AF41, which equals the value 34 **DATA:** Recommended value is DiffServ Code Point (DSCP AF23), which equals the value 22 **SIGNALING:** Recommended value is DiffServ Code Point (DSCP AF31) which equals the value 26	The DiffServ Video settings are used to define which priority Audio, Video, Data and Signaling packets should have in an IP network.	All
Control Panel > Network > LAN Settings > Quality Of Service > DIFFSERV TELEPHONE	**AUDIO** Enter a priority, which ranges from 0 to 63 for each type of packets. The higher the number, the higher the priority. **AUDIO:** Recommended value is DiffServ Code Point (DSCP) EF, which equals the value 46.	The DiffServ Telephone setting is used to define which priority Audio packets should have in an IP network for telephone calls.	All
Control Panel > Network > LAN Settings > IEEE 802.1X SETTINGS	**MODE** The system may be connected to an IEEE 802.1X LAN network with a port-based network access control that is used to provide authenticated network access for Ethernet networks. **ON:** The 802.1X authentication is enabled **OFF:** The 802.1X authentication is disabled. Default mode is Off.	The IEEE 802.1X standard defines port-based, network access control that is used to provide authenticated network access for Ethernet networks.	All
Control Panel > Network > LAN Settings > IEEE 802.1X SETTINGS	**ANONYMOUS IDENTITY** The 802.1X Anonymous ID string is to be used as unencrypted identity with EAP types that support different tunneled identity, like EAP-PEAP and EAP-TTLS. If set, the anonymous ID will be used for the initial (unencrypted) EAP Identity Request. Example: "`System1234`"		All
Control Panel > Network > LAN Settings > IEEE 802.1X SETTINGS	**IDENTITY** The 802.1X Identity is the user name needed for 802.1X authentication. Example: "`MyMeetingRoom`"		All
Control Panel > Network > LAN Settings > IEEE 802.1X SETTINGS	**PASSWORD** The 802.1X Password is the password needed for 802.1X authentication. Example: "MyPassword"		All
Control Panel > Network > LAN Settings > IEEE 802.1X SETTINGS	**EAP-MD5** **ON:** The EAP-MD5 protocol is enabled. Default mode is On. **OFF:** The EAP-MD5 protocol is disabled	EAP - Extensible Authentication Protocol MD5 - Message Digest Algorithm 5	All

MENU ADDRESS	SETTINGS DESCRIPTION	INFORMATION	PRODUCT
Control Panel > Network > LAN Settings > IEEE 802.1X SETTINGS	**EAP-TTLS** **ON:** The EAP-TTLS protocol is enabled. Default mode is On. **OFF:** The EAP-TTLS protocol is disabled	EAP - Extensible Authentication Protocol TTLS - Tunneled Transport Layer Security	All
Control Panel > Network > LAN Settings > IEEE 802.1X SETTINGS	**EAP-PEAP** **ON:** The EAP-PEAP protocol is enabled. Default mode is On. **OFF:** The EAP-PEAP protocol is disabled	EAP - Extensible Authentication Protocol PEAP - Protected Extensible Authentication Protocol	All
Control Panel > Network > NETWORK PROFILES	**NAME** There are 7 network profiles. The first 4 are predefined and the next 3 are user defined. If applicable, add a Call Prefix and/or Call Suffix. The prefix or suffix to a profile it will automatically be added to the number being dialled. Enter the Name and Network type for the Network Profiles 5, 6 or 7. Example: "`System`"		All
Control Panel > Network > NETWORK PROFILES	**CALL PREFIX** A Call Prefix can be added for each profile. Using Call Prefix is convenient if you have a fixed prefix for your service provider. If you add a prefix to a profile, this prefix will automatically be added in front of the number being dialled. Example: Add "`0`" as a Call Prefix to the 2nd profile, ISDN. If you enter "`12345678`" in the dial menu and select ISDN, the number dialed will be "`012345678`".	Using * (asterisk) in the dial string. When dialing with MXP, a single * is used by the system to indicate the following sub number. In this case the * will not be part of the dial string. It is possible to insert a * in the dial string by using the escape sequence * (backslash asterisk) needed by some switches. A single * will work like before indicating a sub number. The new escape sequence can be used directly in the dial string in the 'Call Prefix' or 'Call Suffix'. The escape sequence will not work for the second number and sub number.	All
Control Panel > Network > NETWORK PROFILES	**CALL SUFFIX** A Call Suffix can be added for each profile. If you add a suffix to a profile, this suffix will automatically be added in the end of the number being dialled. Example for usage with a Border Controller: You want to dial someone at `company.com`, then you can set the suffix: `@company.com`. When you dial a person, the actual dial string will be `person@company.com`		All
Control Panel > Network > NETWORK PROFILES	**NETWORK** When using the Network Profiles 5, 6 and 7 you can make a Network selection for the profile. **AUTO:** When set to Auto the system will parse (analyze) the number to dial and decide what network to use based on this **H.320:** Select H.320 for an ISDN network **H.323:** Select H.323 for an IP network **SIP:** Select SIP for a SIP network	Some systems do not have ISDN (H.320). This applies to the 1700 MXP and NET versions of 3000/990/880 MXP.	All

MENU ADDRESS	SETTINGS DESCRIPTION	INFORMATION	PRODUCT
Control Panel > Network > DATA PORT	**BAUD RATE, PARITY, DATA BITS, STOP BITS** The system provides 1 - 2 standard RS232 serial ports to allow a computer to be connected for data transfer and control purposes. Note! When connecting to a PC, the connecting cable must be a straight through RS232 cable. Configure the settings as required for your application: Baud Rate (bps): 1200 - 115200 Parity: None, Odd, Even Databits: 7, 8 Stopbits: 1, 2	A successfully connection of a PC to Data Port 1 requires that the PC and the system are identically configured. The control interface provided by the Data Port supports a subset of the Hayes command set, as well as a comprehensive set of system specific commands. It maintains communication with the Data Port's command interpreter at all times. All features available from the hand-held remote control can be accessed through the Data Port.	6000 3000 1700 95/75
Control Panel > Network > DATA PORT	**DATA PORT MODE** **CONTROL:** Gives command access, with the same interface as telnet or ssh. This is the default mode. **TRANSPARENT:** Line based text interface to far end in point to point call. The far end must also have transparent mode enabled. **DIRECT:** Raw data interface to far end in point to point call. The far end must also have direct mode enabled. Any data received on the local serial port is transmitted without change to the far end serial port. **OFF:** Turns the data port Off.		
Control Panel > Network > DATA PORT 2	**DATA PORT 2 SETTINGS AND MODE** Data port 2 is dedicated to the main camera and will not be available in standard configuration. The system will automatically detect PrecisionHD Camera and WAVE camera. At least one of the cameras must be connected to the data port 2. All communications settings, except the Mode setting, are automatically configured. Exception: If Mode is Auto and no camera is connected to the Data port 2, the Baud rate, Parity, Data bits and Stop bits settings will be enabled. **VISCA:** Select VISCA mode if the camera support the VISCA protocol. **AUTO:** Select Auto and the system will automatically detect the PrecisionHD Camera or WAVE cameras.	VISCA™ is a trademark of Sony Corporation	6000
Control Panel > Network > CAMERA PORT	**CAMERA PORT MODE** The Camera Port can be used by both PrecisionHD Camera and Wave II Camera. **VISCA:** Select VISCA mode if the camera support the VISCA protocol. **AUTO:** Select Auto and the system will automatically detect the PrecisionHD Camera or WAVE cameras.	VISCA™ is a trademark of Sony Corporation	3000
Control Panel > Installation >	**VIEW DEFAULT SETTINGS** When you press "View Default Settings" you will see an overview of all default system setting values. Use arrow up/down on the remote control to move up/down in the list.		All

MENU ADDRESS	SETTINGS DESCRIPTION	INFORMATION	PRODUCT
Control Panel > Installation > VIEW DEFAULT SETTINGS	RESTORE DEFAULT SETTINGS In the “View Default Settings” menu you can select “Restore Defaults”. When you select “Restore Defaults” you be prompted to confirm your intentions: **CANCEL:** If you press Cancel you will return to view the default settings. **OK:** If you press OK the system settings will be restored to the default system settings.	When you restore the default settings the following system settings are not affected: Network settings Option Keys Directories System Name Call Quality settings The ISDN-PRI Switch Type	All

Control Panel > Installation > PROFILES	INSTALLATION PROFILES
	Several user profiles can be saved on the video system. This makes it easy to pre-configure the video system and switch between the different configurations.
	Save Current Settings to Profile
	▪ Open the Installation Profiles menu and press the Save Current Settings to Profile button.
	▪ A sub menu will appear. Enter a name for the profile and press the Save button.
	Activate Selected Profile
	▪ Open the Installation Profiles menu and select a profile from the list. Press Arrow key up/down to scroll and OK button to select a profile.
	▪ Press the Activate Selected Profile button. You will be prompted to confirm your intentions:
	  ▪ Cancel Press Cancel to return to the Installation menu.
	  ▪ OK The video system will automatically be configured according to the profile.
	Delete Selected Profile
	▪ Open the Installation Profiles menu and select a profile from the list. Press Arrow key up/down to scroll and OK button to select a profile.
	▪ Press the Delete Selected Profile button. You will be prompted to confirm your intentions:
	  ▪ Cancel Press Cancel to return to the Installation menu.
	  ▪ OK The selected profile will be deleted.
			All

MENU ADDRESS	SETTINGS DESCRIPTION	INFORMATION	PRODUCT
Control Panel > Installation > WIZARD	**INSTALLATION WIZARD** The Installation Wizard runs automatically when you install the system and you can start it anytime from the Installation menu in the Control Panel. Using the Installation Wizard is convenient when installing video systems when you have both Border Controller and TMS (Cisco TelePresence Management Suite) available. You only have to register to the TMS Server and the rest is configured by the network. The Installation Wizard takes you through the following steps: 8. Welcome page 9. Select Language 10. Enter System Name 11. Enter Software Option Keys 12. Enter IP Settings ▪ Obtain IP Address Automatically ▪ Static IP Address (address, subnet, gateway) 13. Enter SIP Settings 14. Enter External Management settings ▪ On: Enter information for your TMS server (address, path) ▪ Off: Select from the list: ▪ Gatekeeper and enter the gatekeeper settings ▪ Call Manager and enter the call manager settings ▪ Direct 15. Finish the wizard. The system will automatically restart the system. **FINISH:** Press the Finish button to save the changes and restart the system. A message will appear: "`Attention: The settings are now saved. A restart of the system is required. Do you want to restart now?`" Press OK to restart or press Cancel to return to the Installation menu without restarting. **CANCEL:** Press the Cancel button to exit the Installation Wizard without saving any changes. A message will appear: "`Attention: The settings are not saved. Do you want to exit the installation wizard without saving?`" Press OK to exit or press Cancel to return to the Installation wizard.	About the wizard Press Next to continue; Cancel to exit; Previous to go back; Finish to finish the wizard. All the settings in the Installation Wizard are also found in the Control Panel Library. To make the changes take effect the video system needs to be restarted.	All

MENU ADDRESS	SETTINGS DESCRIPTION	INFORMATION	PRODUCT
Control Panel > Buttons > USER GUIDE	**USER GUIDE** The on-system User Guide serves to help you when you feel stuck and time is short. It is not an exhaustive presentation of the system's features, but it comes in handy whenever you need to get yourself up and going. The User Guide Menu ▪ Using the Remote Control ▪ Making a Call ▪ Using the Phone Book ▪ Moving the Camera ▪ Making Multisite Calls ▪ Showing a Presentation ▪ Using Services ▪ Using Camera Presets * ▪ About MXP	* Applies to systems with controllable cameras only.	All
Control Panel > Buttons > DIAGNOSTICS	**SYSTEM INFORMATION** The content of System Information will differ depending on which product you have and which optional features are installed and activated. ▪ System Name ▪ Active IP Address ▪ Ethernet Speed ▪ My IP Number ▪ My ISDN Number ▪ H.323 ID ▪ Gatekeeper ▪ SIP Address (URI) ▪ SIP Server ▪ MultiSite number 2 ▪ MultiSite number 3 ▪ Software Version ▪ Internal Test Software ▪ Options Installed ▪ Serial Number ▪ MAC Address ▪ Network ▪ Lines Active ▪ Lines not Active Use the remote control and press arrow key up and down to scroll in the System Information list.	The Diagnostics menus allows testing of individual system components and displays the current system settings. NOTE: The Serial Number is also found on a sticker on the system. It is essential for identifying the system when it comes to service contracts or other support activities. The Serial Number format is xx.xxxxx or xxAxxxxx.	All

MENU ADDRESS	SETTINGS DESCRIPTION	INFORMATION	PRODUCT
Control Panel > Buttons > DIAGNOSTICS	**CHANNEL STATUS ISDN-PRI AND ISDN-PRI** Channel Status gives information about the call progress. The information indicates the various stages each ISDN B-channel goes through whilst establishing a connection. **BRI STATUS:** Idle - The channel is idle. Calling - When calling, the network has acknowledged the call. Connected - When connection is established. Sync - When the channels are synchronized. Active - When all available channels are connected. Releasing - Waiting for the network to confirm a release of the call. Released - When disconnected - the network has acknowledged the disconnection. **PRI ALARMS:** **PRI RED ALARM:** Red alarm or Loss of signal (LOS) means that there is no signal and thus no framing information received (this has the same effect as pulling out the PRI cable). **PRI YELLOW ALARM:** Yellow alarm or Remote Alarm Indicator (RAI) means that the system is receiving framing info, but in this framing info the other side tells the system that it is not reading the system's transmitted framing info. Typically, this may be a broken connector in the TX part of the system PRI cable. This could also indicate weak or noisy signal in the TX part of the system PRI cable. **PRI BLUE ALARM:** Blue alarm means that the network on the far side of the CSU is unavailable. PRI Blue Alarm Example: The system is connected via a CSU (Channel Services Unit) as follows: System-CableA-CSU-CableB-Network. If a CSU loses framing/sync from the network (example: a bad CableB), it will no longer send valid framing out on CableA towards the system. Instead it transmits "Blue Alarm". Seen from the system receiving the blue alarm, this means that the network on the far side of the CSU is unavailable.	The Diagnostics menus allows testing of individual system components and displays the current system settings. The most common Cause Codes for ISDN: 1 Unallocated (unassigned) number 2 No route to specified transit network (WAN) 16 Normal clearing 17 User busy 18 No user responding 21 Call rejected 28 Invalid number format (incomplete number) 29 Facility rejected 31 Normal, unspecified 34 No circuit/channel available 41 Temporary failure 58 Bearer capability not presently available 65 Bearer service not implemented 69 Requested facility not implemented 81 Invalid call reference value 88 Incompatible destination 100 Invalid information element contents 102 Recovery on timer expiry 127 Internet working, unspecified 255 TANDBERG specific undefined cause code	All with ISDN-BRI or ISDN-PRI
Control Panel > Buttons > DIAGNOSTICS	**CALL STATUS** The Call status page gives information about the on-going calls. The menu has two columns, one for transmitted and one for received audio/video/data information. If Dual Stream or MultiSite is available on your system, and in use, pressing the Up/Down keys on remote control will show one page per connected site. Information will vary depending on whether H.320 (ISDN) calls or H.323 (IP) calls are made.	The Diagnostics menus allows testing of individual system components and displays the current system settings.	All

MENU ADDRESS	SETTINGS DESCRIPTION	INFORMATION	PRODUCT
Control Panel > Buttons > DIAGNOSTICS	DETAILED CALL STATUS The Detailed Call Status menu provides detailed information on Audio, Video and DuoVideo in regards to Packet Loss, Jitter and Packets dropped. The menu has two columns, one for transmitted and one for received audio/video/data information.	The Diagnostics menus allows testing of individual system components and displays the current system settings.	All
Control Panel > Buttons > DIAGNOSTICS	SYSTEM SELFTEST The system performs a check to determine internal hardware integrity. System Selftest is useful when you want to check if your network connection is active.	The Diagnostics menus allows testing of individual system components and displays the current system settings.	All
Control Panel > Buttons > DIAGNOSTICS	VIEW ADMINISTRATOR SETTINGS This window displays all the system settings. The system settings available will vary depending on what software options are installed. Use the Arrow keys on the remote control to scroll through the list.	The Diagnostics menus allows testing of individual system components and displays the current system settings.	All
Control Panel > Buttons > DIAGNOSTICS	IP ADDRESS CONFLICT CHECK The system will give a warning if there is an IP conflict. To initiate the check you select IP Address Conflict Check from the Diagnostics menu.	The Diagnostics menus allows testing of individual system components and displays the current system settings.	All
Control Panel > Buttons > Diagnostics > WARNINGS	IP NETWORK QUALITY WARNINGS ▪ The system is experiencing 5% or higher, packet loss in the IP network. This will affect the quality of the call. ▪ The system is experiencing high jitter (i.e. 200 ms or higher) in the IP network. This may affect the quality of the call. ▪ The system is dropping IP packets due to latency in the network. This may affect the quality of the call.	Any warnings registered by the system will be displayed in the Warnings menu in the bottom of the screen. Go to the Diagnostics menu and open a warning in the list to get more information about the warning.	All
Control Panel > Buttons > Diagnostics > WARNINGS	H.323 GATEKEEPER WARNINGS ▪ Could not register to the Gatekeeper. ▪ The Gatekeeper rejected the registration attempt. Another system is already registered with the same alias or H.323 ID. ▪ The max capacity on the Gatekeeper is reached. Registration failed. ▪ Tried to register to the Gatekeeper without a valid alias. Registration failed. ▪ The system is not allowed to register with this Gatekeeper. ▪ Can not find the Gatekeeper. Check the Gatekeeper configurations on the system.	Any warnings registered by the system will be displayed in the Warnings menu in the bottom of the screen. Go to the Diagnostics menu and open a warning in the list to get more information about the warning.	All using a Gatekeeper
Control Panel > Buttons > Diagnostics > WARNINGS	ISDN-BRI WARNINGS ▪ ISDN is enabled on BRI line x, but the line is not connected. Please check your network connection or disable the line. (101) ▪ There is something wrong with ISDN-BRI line x. Please check your network connection. (102)	Any warnings registered by the system will be displayed in the Warnings menu in the bottom of the screen. Go to the Diagnostics menu and open a warning in the list to get more information about the warning.	All with ISDN-BRI

MENU ADDRESS	SETTINGS DESCRIPTION	INFORMATION	PRODUCT
Control Panel > Buttons > Diagnostics > WARNINGS	ISDN-PRI WARNINGS ▪ ISDN-PRI is configured for this system, but the line is not connected. Please check your network connection or disable the network. (131) ▪ There is something wrong with the ISDN-PRI line (Blue alarm). Please check your network connection. (132) ▪ There is something wrong with the ISDN-PRI line (Yellow alarm). Please check your network connection. (133) ▪ There is something wrong with the ISDN-PRI line (D-Channel not active). Please check your network connection. (134)	Any warnings registered by the system will be displayed in the Warnings menu in the bottom of the screen. Go to the Diagnostics menu and open a warning in the list to get more information about the warning.	All with ISDN-PRI
Control Panel > Buttons > Diagnostics > WARNINGS	EXTERNAL NETWORK WARNINGS ▪ External Network is configured for this system, but the line is not connected. Please check your network connection or disable the network. (161)	Any warnings registered by the system will be displayed in the Warnings menu in the bottom of the screen. Go to the Diagnostics menu and open a warning in the list to get more information about the warning.	All with External Network
Control Panel > Buttons > Diagnostics > WARNINGS	LEASED E1/T1 WARNINGS ▪ Leased E1/T1 is configured for this system, but the line is not connected. Please check your network connection or disable the network. (191) ▪ There is something wrong with the Leased E1/T1 line (Blue alarm). Please check your network connection. (192) ▪ There is something wrong with the Leased E1/T1 line (Yellow alarm). Please check your network connection. (193)	Any warnings registered by the system will be displayed in the Warnings menu in the bottom of the screen. Go to the Diagnostics menu and open a warning in the list to get more information about the warning.	All with Leased E1/T1
Control Panel > Buttons > AUDIO DEMO	AUDIO DEMO Cisco systems are designed to improve audio quality during a video conference – as if the person is in the same room! Demonstrate the high quality Audio of your system by pressing the Audio Demo button at the Control Panel Menu.		All
Control Panel > Buttons > RESTART	RESTART THE SYSTEM You will find the Restart button at the bottom of the Control Panel menu. Select the Restart button and press OK on the remote control. You are prompted with a dialog box saying: Do you want to restart? **OK:** Press OK to restart the system. **CANCEL:** Press Cancel (X) to abort the restart.	Some Control Panel Settings require a restart of the system to put changes into effect. In these cases you will find a Save & Restart button in the respective menus. Example: Both IP Settings and SIP settings in the Network menu requires restart of the system to put changes into effect.	All

Chapter 5

Appendices

Learn about room guidelines, how to apply your own logo, ISDN connections and how to set up your video system for different areas of utilization.

Stay up-to-date

We recommend you visit the TANDBERG web site regularly for an updated version of this guide. Go to: ▶ http://www.cisco.com/go/telepresence/docs

In this chapter...

Password Protection of the Control Panel

About administrator password

All settings of the Control Panel may be password protected by entering a pin code consisting of up to five digits in the Administrator Password field.

Whenever you click the Settings icon in the Control Panel, you will prompted to key in this pin code in order to gain access to the Control Panel Settings.

Setting the administrator password

- Use the Arrow keys of the remote control to navigate to the Control Panel icon and press OK
- Navigate to the Security icon and press OK
- Navigate to the Administrator Password and key in a password (pin code)
- Navigate to the Save icon and press Ok to leave menu, putting changes into effect

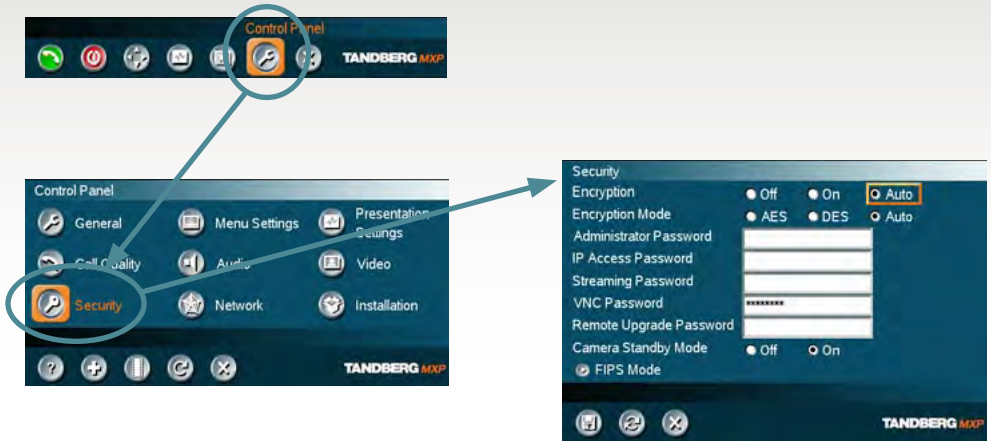

Gain Access to a Password Protected Control Panel Menu

- Use the Arrow keys of the remote control to navigate to the Control Panel icon and press OK
- In the Control Panel navigate to the Administrator Settings and press OK
- You will now be prompted for a menu password
- Key in the Administrator Password and press OK.
- If the wrong pin code is entered, the message:

  Attention
  Wrong menu password

  – will appear on the screen.

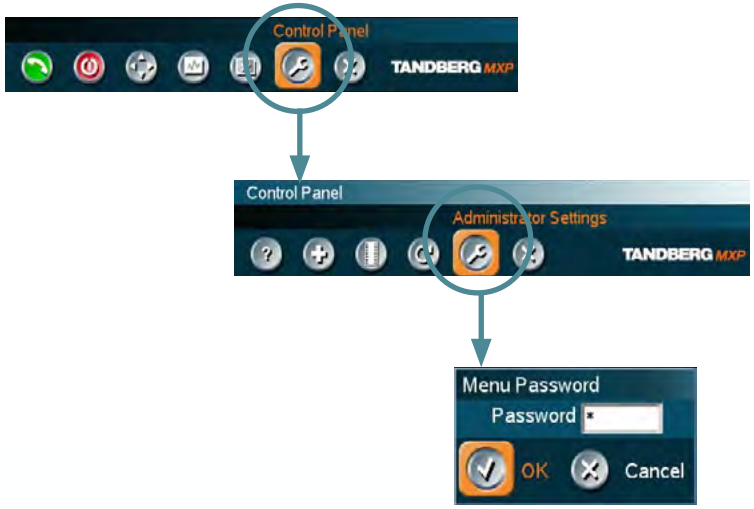

Clear the administrator password

Log in the same way as when gaining access to a password protected Control Panel Settings menu.

- Navigate to the Security Settings menu, in the same way as setting the Administrator Password.
- In the Administrator Password parameter field, use the Cancel key to clear the password and navigate down to the Save icon to leave menu putting changes into e

Using Access Codes for call control

Your Cisco system may, or may not, be set up to require Access Codes to be typed in before a call can be made. Access Codes are used for two things; call restrictions and billing opportunities.

Call restrictions may be applied by installing a file of valid access codes that must be entered to permit calls to be made. This installation is typically made from TMS (Cisco TelePresence Management Suite – available separately).

Billing opportunities. Assume that an access code is needed whenever you make a call. Your company may have different access codes for the different clients of your company. Then, the access code used may be picked up by TMS to generate statistics on who is calling whom, when, and for how long time.

This information may later form the basis for billing clients or departments. Observe that in this case there will be no strict need for installing an Access Code file on your system – TMS will still have access to the codes you have assigned to the calls. In this case any code entered will be considered valid.

Of course, the two may be combined to form a This will then become a system that acts as forced billing.

Access Codes can be up to 16 characters long.

How to activate access codes

The Access Codes feature is activated from the Security settings menu of the Control Panel. The activation/deactivation of the feature may be password protected by your System Administrator. If in doubt, consult your System Administrator.

In addition an Access Code File can be used to restrict the valid code to a set of predefined codes. If no such file exists in your local video system and Access Code still is set to On, the system will prompt you to key in a code, but any code will do.

To skip the use of Access Codes, set Access Code to Off and no prompt for code will be produced by the video system.

How to create an access code file and upload the file

On your PC create the file to be used as a list of valid Access Codes and save it as `access.txt.` The `access.txt` file is a plain text file with one line per Access Code. As an example of an `access.txt` file, consider the following:

```
1234
1250
A1
B2
ABC
```

Maximum length of each Access Code is 16 characters, and you can have as many Access Codes as you want. You may use any combination of the alphanumeric characters available by means of your Remote Control, including the space character.

Uploading access codes to the system

The Access Code text file must uploaded to your local video system.

Make sure your PC and your video system can communicate via IP

Open a DOS-window and go to the folder where the `access.txt` file is located

Type `ftp` <IP-address of your local video system>. To locate the IP Address of your system, go to System Information in the Diagnostics menu. Use Arrow down key on remote control to scroll down.

When system prompts for `User:` press Enter or key in the IP Access Password of your video system

Type `bin` and press Enter

Go to the user folder: type `cd user`

Upload the `access.txt` file: type `put access.txt`

Exit from ftp: type `bye`

Your video system will check if the entered Access Code is valid by comparing the code with the allowed codes listed in the `access.txt` file located on the ftp-server in your local video system.

If no `access.txt` file has been uploaded to the Codec of your local video system, the code entered will be registered, but no validation will take place. Therefore you can enter whatever code you want and still have access to the system.

Access codes activated

Whenever the Access Code feature has been set to On, in the Control Panel > Security Settings, you will be prompted to enter a code when starting a call.

The following dialogue box appears on the screen:

The remote control keypad will be in ABC mode.

Key in the code and press OK. Then dial your number.

Cisco TelePresence Management Suite

Access Codes can also be controlled from the Cisco TelePresence Management Suite (TMS). If you run a TMS, you can set and maintain Access Codes from within the TMS.

Statistics and billing

Your system may have been configured to work in a setup involving a Cisco TelePresence Management Suite (TMS) system. If so, as default your system will transmit call information to TMS. This information also includes the Access Codes applied to the calls. Hence, the TMS system may always utilize any Access Code information available, for statistics and for billing.

About Sub-address

A Sub-address is used to differentiate between systems on the same ISDN line and is primarily used in European Countries.

How to Specify a Sub-address

To specify an ISDN sub-address or its LAN equivalent extension address (TCS-4), add a star (*) after the number and then enter the sub-address/extension address.

```
Examples:
12345678*10
12345678*abcd

Syntax:
<number>*<Sub-address/extension address/MCU
password>
```

NOTE: When dialing IP via a gateway, the number behind the star (*) on IP might be interpreted as an extension address.

About Extension Address

When dialing via a gateway, a LAN equivalent extension address (or TCS-4) is used to differentiate between systems on the LAN.

About MCU Password

When calling an external MCU (Multipoint Conference Unit) which requires a password (TSC-1), the password can be added after the star (*). If no password is specified at the time of dialing, the user will be asked to enter the password after connecting to the MCU.

PC presentations

PC Presenter is used for displaying PC images on your video system using a VGA-DVI cable between the PC and video system.

Plugging a PC into the system is made extremely simple through the PC Presenter, avoiding the need for any additional hardware such as a projector, PC/Video converter or extra cables.

Using PC Presenter

Users can have their presentations on a laptop that is brought into the meeting room.

- Remember to connect the PC to the codec before pressing the Presentation button.
- Note that the image will appear smoother on the system if the presentation is already displaying in full screen on the PC prior to connecting the PC to the video system.
- If no PC image is displayed on your monitor, make sure that your PC is set to activate your VGA output. On most laptop PCs you must press a special key combination to switch the PC image from the PC screen to the video screen
- Note that the DVI/VGA input is compliant with VESA Extended Display Identification Data (EDID) and will be able to reconfigure the PC's screen settings if it is currently configured to a VGA format that the system doesn't support.
- Also note that you can use the DVI input to transmit high resolution images from document cameras or other sources supporting the HD format 720p.

For details on formats supported on DVI-I in, please refer to Interfaces.

Configuration

Connect a PC to the codec with the DVI/VGA cable:

- Connect the VGA-DVI cable to the PC Presenter (PC DVI-I in) connector on the codec.
- Connect the VGA-DVI cable to your PC.

If you would like to use audio as part of the presentation, connect the headset jack on your PC to the audio input on the PC presenter VGA cable.

INFO: On most laptop PCs you must press a special key combination to switch the PC image from the PC screen to the video screen.

When the PC is connected to the codec, press the Presentation key on the remote control to display the PC image on the video system.

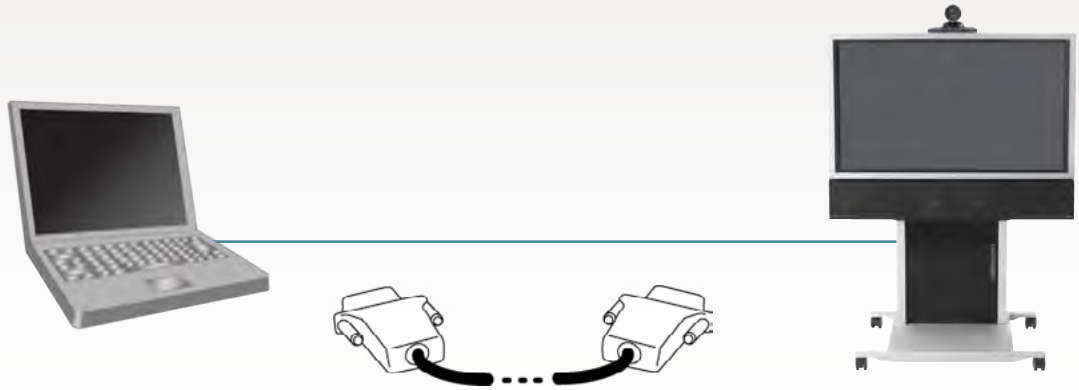

* The PC Presenter is a part of the optional feature NPP (Natural Presenter Package) and PP (Presenter Package) – Please contact your TANDBERG Representative for details.

PC presentations, *continued..*

Using PC SoftPresenter and VNC

PC SoftPresenter is used when you want to display PC images on your video system using a common network.

- The video system and your PC must be connected to the same LAN.
- The VNC (Virtual Network Computing) server software must be running on the PC.
- The PC SoftPresenter is an optional feature – Please contact your Cisco Representative for details.

VNC Server Software

There is more than one supplier of VNC server software. The one explained in this guide is from TightVNC.

The VNC (Virtual Network Computing) server software must be installed on the PC. Free software can be downloaded from http://www.tightvnc.com. Install the software by running the downloaded file.

VNC Server Software Configuration

1. Install the VNC server software
2. On your PC, select the following to setup VNC: Start > All Programs > TightVNC > Show User Settings
3. Select Accept Socket Connections.
4. Select Auto for Display Number. Display Number in the video system must then have the value 0.
5. Enter a password in the Password-field. This must correspond with the VNC password on your video system. The VNC Settings are found in the Control Panel > Presentation Settings > VNC Settings.
6. Save and close.

Showing PC contents on the video system

- Start the VNC software on your PC.
- Make sure the VNC Settings are configured on your video system.
- Select VNC as Presentation Source, in the Presentation menu on your video system, to make your PC use VNC.

INFO: On most laptop PCs you must press a special key combination to switch the PC image from the PC screen to the video screen.

When the PC is connected to the codec, press the Presentation key on the remote control to display the PC image on the video system.

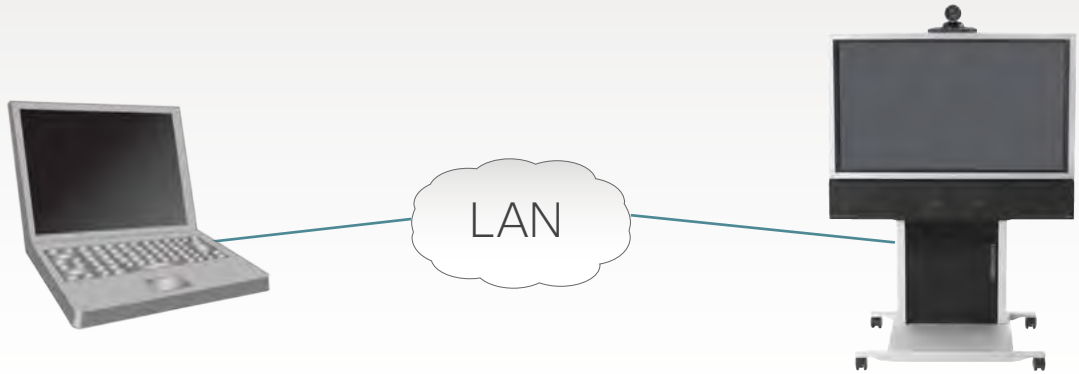

The VNC Software must be running on the PC and be configured to correspond to the VNC Settings on the Video System.

PC and video system must be connected to a common network.

The optional feature PC SoftPresenter must be enabled and VNC Settings must be configured.

NOTE: The VNC settings will reset to default when the system goes into standby. To prevent the system from going into Standby Mode see Camera Standby Mode settings in the settings library.

PC presentations, *continued..*

Dual Video Stream (DuoVideo[TF]/H.239/BFCP)

With Dual Video Stream you have the opportunity to show two different live video streams simultaneously, main video and one additional source.

This is handy when showing a presentation. You see the live presentation and the live video of the presenter simultaneously.

When you start a presentation, Dual Video Stream starts automatically if both local and remote system supports Dual Video Stream.

If one of the systems does not support Dual Video Stream, no second video stream will be established and your presentation will be shown as your main video.

Dual Video Stream is available on all systems with Natural Presenter Package installed.

In Presentation Settings, you can set Presentation Start to Manual. That means that Dual Video Stream will not start automatically.

Dual Video Stream and Bandwidth

Using Dual Video Stream, the quality automatically downspeeds to the optimal bandwidth.

This means that you need higher quality to allocate enough bandwidth for the two video streams.

Dual Video Stream borrows bandwidth from main video stream.

When Dual Video Stream is closed, the bandwidth is returned to the main video.

DuoVideo[TF] allows participants at the far end to simultaneously watch a presenter on one screen and a live presentation on the adjoining screen.

H.239 is an ITU standard defining how to send two video sources simultaneously.

BFCP (Binary Floor Control Protocol) is a protocol to coordinate access to shared resources in a conference.

Presentation Settings and Dual Video Stream

The Presentation Settings are found in Control Panel > Presentation Settings.

- Set Presentation Start to Auto or Manual.

The Presentation Sources are found in the Call Menu > Presentation.

- Select Presentation Source to: Main Video, DuoVideo, Snapshot and Far End Video
- Within the categories above you can select between the video sources available for your video system: MainCam, PC, DocCam, VCR, AUX and VNC.

Example with Presentation Start set to Auto

With Presentation Start set to Auto the Dual Video Stream will start automatically.

1. Start a meeting with main camera as video source.
2. Press the Presentation key on the remote control to start a PC presentation.
3. PC will appear as a Dual Video Stream in addition to main camera.
4. End the Dual Video Stream presentation by pressing the Presentation key again

Example with Presentation Start set to Manual

With Presentation Start set to Manual the Dual Video Stream must be started manually. Set to Manual when you do not always want to use Dual Video Stream.

5. Start a meeting with main camera as video source.
6. Press the Presentation key on the remote control to start a PC presentation.
7. A dialog box appears where you can choose to show PC as Dual Video Stream or not.
8. End the Dual Video Stream presentation by pressing the Presentation key again.

Call Rate with DuoVideoTF/H.239/BFCP

When network is H.323

The system will use the available call rate for audio, data, main video, and DuoVideoTF/H.239 if opened. When the network is H.323 the DuoVideoTF/H.239 rate will approximately be the same as the main video rate.

When network is SIP

The system will use the available call rate for audio, data, main video, and DuoVideoTF/BFCP if opened. When the network is SIP the DuoVideoTF/BFCP rate will approximately be the same as the main video rate.

When network is ISDN

When the network is ISDN/H.320 the following table applies for DuoVideo Bandwidths*:

Call Rate with DuoVideo over ISDN	
Call Rate (kbps)	*DuoVideo Rate (kbps)*
128	64
192	64
256	64
320	128
384	128
512	128
768	384
1152	384
1472	320
1536	384
1920	384

* If Restrict (56k) is set to On, use 56k multiples: E.g. 112 -> 56, 168 -> 56, etc

Wireless Network Adapters

Many of the endpoints comes with a PCMCIA port where a wireless card can be plugged in to make the system interface with a few selected 802.11b wireless network cards.

The major drawback by using the PCMCIA interface to get a system onto a wireless network is that the choice of usable cards is very limited, this because of the inconvenience of having a wide specter of software drivers installed or available for installation.

It has been a challenge to get support for the newer wireless cards on the market because many of the chipset manufacturers for the cards do not make their development code available in a format we can use. Most offer Windows based development code and as many of you are aware, we do not run Windows on our products.

An easy work-around for this limitation is to use a wireless network adapter which makes the system believe it is connected by wire, as normal.

Recommended cards

- Compaq WL110 11 Mbps Wireless LAN
- Lucent Orinoco 11 Mbit/s SILVER
- Lucent Orinoco 11 Mbit/s GOLD
- Cisco Aironet 350 series (AIR-PCM 350 series)
- Enterasys Networks RoamAbout 802.11 DS High Rate
- Melco Buffalo WLI-PCM-L11G

Recommended access points

- Compaq WL410 base station
- ASUS WL-330g Pocket Wireless Access Point
- Macsense AeroPad Mini WUA-800 Network Adapter
- D-Link DWL-G810

Recommended Wireless Network Adapters

TANDBERG has tested some wireless network adapters.

A wireless network adapter is typically a small box connected to the endpoint (in this case) by a regular network cable, and powered either from a USB connector or from the net by an AC/DC-adapter.

An option is using an ASUS Pocket Wireless Access Point WL-330g, which has been tested by TANDBERG. This device will work as an Ethernet bridge by plugging the RJ45 from the codec into the device. You can then power it from the USB port of the TANDBERG codec or from a separate power brick.

ASUS WL-330g Pocket Wireless Access Point

- Dimensions: 3.3in x 2.45in x 0.67in
- Supports both 802.11b and 802.11g.

Models tested by TANDBERG includes

- Aeropad Mini WUA-800
- D-link DWL-G810

The adapters have basically exactly the same characteristics and functions. The main difference is the size. The D-Link adapter is about twice the size of the other two adapters which are more or less identical. The D-Link adapter also comes only with a net-adapter for power, whereas the other two have USB-adapters. The D-Link adapter provides better coverage.

Configuration

The adapter has to be configured from a PC to match the settings of the wireless network it is supposed to connect to.

The wireless network adapters can usually be set as either an adapter or as an access point.

The adapter is configured via a conventional html user interface from a PC.

The PC NIC has to be set to a static IP-address in accordance to the settings of the adapter.

Below you will find some typical settings for configuring a wireless network adapter (the ones marked with '*' are mandatory):

- AP Name: Unit Name
- SSID*: Name on wireless network
- Channel: Is provided automatically in adapter mode
- Wireless Mode: (is usually infrastructure)
- Authenthication*: Type of encryption
- WEP Key*: WEP encryption On/Off for open systems
- Mode*: Type of key (hex/ASCII)
- Key(s)*: 1 - 4 keys

Services for Multipoint Calls

A Multipoint Control Unit (MCU) enables several sites to articipate in the same conference. During an MCU conference, the status line will provide information about the conference.

Embedded or external MCU

The MCU can be embedded or external (MPS), but when making a call the user will not see any difference. The system administrator may want to configure the Multipoint Call Options. See the Control Panel > General > Multipoint Call Options.

External services from TMS

The External Services lets you obtain information from the Cisco TelePresence Management Suite (TMS).

About the External Services Menu

The External Services menu lets you see information obtained from the Cisco TelePresence Management Suite (TMS)

- Today's Bookings
- System Contact Information

How to Enable the External Services Menu

The External Services menu is available only when the External Services settings are configured (enter the Address and Path to the TMS and set the External Services to On). Go to Control Panel > General > External Server > External Services.

External services features

- External Services (from TMS)
- Request Floor and Release Floor
- Conference Layout
- Terminal Names
- Chair Control
- Assign Floor and Release Floor from Participant
- View Site and End View
- Disconnect Participant
- Terminate Meeting
- More about Multisite (embedded MCU)
- More about MultiWay™
- Text Chat

The MultiSite and Multiway features are explained in The setting library section.

All other issues from the list above are explained in the MXP User Guide, see the http://www.tandberg.com/docs

Intelligent Video Management (IVM)

You may configure the picture sent from your Cisco system to reflect your specific requirements and the applications being used adding an additional level of flexibility and adaptability to your system.

Generally, the IVM will always try to transmit the format closest to the video input format. Each video input can be configured to either motion or sharpness:

Video input configured to Motion

Motion* is used when there is a need for higher frame rates, typically when a large number of participants are present or when there is a lot of motion in the picture.

At low bit rate:

- CIF will be used from a PAL video input
- SIF will be used from a NTSC video input
- w288p from wide format (HD720p) input
- VGA/SVGA/XGA from PC, Digital Clarity
- WXGA /1280x768), Digital Clarity

At high bit rate:

- 448p will be used from a PAL video input if Natural Video is Off or Auto or if Natural Video is x kbps and the bit rate is lower than x kbps
- 400p will be used from a NTSC video input if Natural Video is Off or Auto or if Natural Video is x kbps and the bit rate is lower than x kbps
- iCIF will be used from a PAL video input, if Natural Video is x kbps and the bit rate is higher than or equal to x kbps
- iSIF will be used from a NTSC video input, if Natural Video is x kbps and the bit rate is higher than or equal to x kbps
- w720p or w448p will be used from a wide format (HD720p) input
- VGA/SVGA/XGA from PC, Digital Clarity

Video input configured to Sharpness

Sharpness* gives improved quality of detailed images and graphics and lower frame rate. Sharpness is ideal for enhancing quality at lower bandwidths.

- 4CIF will be used from a PAL video input, Digital Clarity
- 4SIF will be used from a NTSC video input, Digital Clarity
- w720p will be used from a wide format (HD720p) input
- VGA/SVGA/XGA from PC, Digital ClarityIVM Resolution

The table below shows the relationship between the video input and the Transmission modes selected by the system when either Motion or Sharpness is selected in the Call Quality menu. IVM will work in accordance with this table to optimize the Video quality, according to the capabilities of the remote system(s):

Basic Video Quality	Video Input	Transmission Mode Selection Rules*
MOTION	PAL	448p -> iCIF@50 -> CIF -> QCIF
MOTION	NTSC	400p -> 448p -> iSIF@60 -> iCIF@60 -> SIF -> CIF -> QCIF
MOTION	VGA	448p -> CIF -> QCIF
MOTION	SVGA	448p -> CIF -> QCIF
MOTION	XGA	448p -> CIF -> QCIF
MOTION	Wide	w720p -> w448p -> w288p -> CIF -> QCIF
SHARPNESS	PAL	4CIF -> VGA -> CIF -> QCIF
SHARPNESS	NTSC	4SIF -> 4CIF -> VGA -> SIF -> CIF -> QCIF
SHARPNESS	VGA	VGA -> 4CIF -> CIF -> QCIF
SHARPNESS	SVGA	SVGA -> XGA -> 4CIF -> VGA -> CIF -> QCIF
SHARPNESS	XGA	XGA -> SVGA -> 4CIF -> VGA -> CIF -> QCIF
SHARPNESS	Wide	w720p -> w576p -> w448p -> w288p -> CIF -> QCIF

NATIVE RESOLUTIONS

The following live video resolutions are supported on the system*:

Native NTSC:

- 4SIF (704 × 480 pixels), Digital Clarity
- 400p (528 × 400 pixels)
- iSIF (352 × 480 pixels), Natural Video
- SIF (352 × 240 pixels)

Native PAL:

- 4CIF (704 × 576 pixels), Digital Clarity
- 448p (576 × 448)
- iCIF (352 × 576 pixels), Natural Video
- CIF (352 × 288 pixels)
- QCIF (176 × 144 pixels)
- SQCIF (128 × 96 pixels)

Native PC Resolutions:

- XGA (1024 × 768 pixels), Digital Clarity
- SVGA (800 × 600 pixels), Digital Clarity
- VGA (640 × 480 pixels), Digital Clarity

Wide (16:9) Resolutions:

- w720p (1280 × 720 pixels)
- w576p (1024 × 576 pixels)
- w448p (768 × 448 pixels)
- w288p (512 × 288 pixels)

* Note that 1000MXP do not transmit the following video formats: 448p, 400p, iCIF, iSIF, w288p, w448p, w576p and w720p.

Dialing in From Outside the Enterprise

Dialing in without being registered to a Cisco Gatekeeper

The feature enables dialing through a TANDBERG Gatekeeper without being registered to it. This makes it easy to call in from a video system outside the enterprise.

It's done by dialing:

`EndPointAlias@GatekeeperAddress[:Port]`

where:

- `EndPointAlias`: is the alias of the endpoint you want to call, the endpoint you call must be registered with this alias on the gatekeeper
- `GatekeeperAddress`: is either the IP-address of the gatekeeper in the form a.b.c.d (or IPv6 a:b:c:d:a:b:c:d) or the DNS name (A/AAAA or SRV record) of the gatekeeper.
- `Port`: is optional and gives the Q.931 port to initiate the call. The port default is 1720 and can in most cases be left out.

If using an IP-address, or if not specifying the port, the default is using the normal Q.931 with port 1720.

NOTE! To be able to make such a call, this feature must be enabled in your gatekeeper or border controller, and the called endpoint must be registered with the enterprise gatekeeper or border controller.

Connecting the System

Connecting to ISDN using NT1 Network Adapter

Placing the NT1 Adapter

For convenience the NT1 adapters could be placed inside the video systems cabinet.

Connecting Cables

- Connect the first ISDN cable from ISDN1 on the video system (codec) to the S-interface on your first NT1 network adapter.
- Connect the other ISDN cables to the appropriate NT1 network adapters.
- Connect the U-interface of your NT1 adapter to the line provided from your network provider.

ISDN Cables

- Connect the shorter ISDN cable (RJ45 connectors) delivered with the NT1 between the video system (codec) and the NT1 adapter.
- Connect the longer ISDN cable between the NT1 and the connector (RJ45) at the wall socket.

Configure the Video System

To configure the video system go to Control Panel > Network > ISDN/External/Leased E1/T1 and:

- Set Network Type to ISDN-BRI
- Go to ISDN-BRI Settings and select ISDN Switch Type
- Go to Line 1 Setup:
  - Enable Line 1
  - Enter ISDN Line Numbers (+ SPIDs if required).
- Configure the other lines to be used.
  Some software versions do not support 6 ISDN lines, therefore some of the Line # Setup entries may be grayed out.
- Disable unused lines.
- Check if you need to configure the Advanced ISDN Settings.

Setting up a call

- Go to the Call Menu and select Make a Call
- In the Call Menu, open Default Call Settings
- Set Net to ISDN
- To use these settings for this call only, select the OK button.
  To save the settings as your new Default Call Settings select Set as Default before pressing the OK button.
- Go on with your call and enter the number to be dialed.

Connecting the System, *continued..*

Connecting to PRI/T1

(ISDN-PRI is not available on all Cisco systems)

Using a CSU (Channel Service Unit) adapter

Connecting the system to the ISDN network via the E1/T1-interface using an Adtran T1 ESF CSU ACE or equivalent CSU, will allow up to 1.54 Mbps connection.

The E1/T1-interface must be connected to a CSU approved according to IEC 60950, UL 1950 or equivalent standard.

The PRI-line will run the AT&T 4ESS, 5ESS and National ISDN protocols in addition to Euro ISDN (E1).

Connecting to Adtran T1 ESF CSU ACE

Connect the PRI cable from the video system (codec) to the input marked CPE (Customer Provided Equipment) on the Adtran CSU (a straight through category 5 cable is recommended).

Connect to the network via the NET connector on the Adtran CSU.

Configure the Video system

To configure the video system go to Control Panel > Network > ISDN/External/Leased E1/T1 and:

- Set Network Type to ISDN-PRI

Then go to ISDN-PRI Settings:

- Specify Number Range
- Specify ISDN-PRI Switch Type
- Configure the Channel Hunting settings.
- Configure the Line Settings. (should correspond to the Cable Length setting on the Adtran system).
- Configure the Advanced ISDN Settings
- Configure the Advanced ISDN-PRI Settings

Configure the Adtran T1 ESF CSU ACE

From the display on the unit:

- Enter 2)CONFIG menu using SCROLL and ENTER buttons.
- Enter 3)TERMINAL menu and check 1)FORMAT:ESF, 2)CODE: B8ZS , 3)SET LBO: 0-133 (should correspond to the Cable Length setting on the video system).

Go to Menu and enter 1)NETWORK menu. Set 7)SET LBO: 0.0 (according to information from Telco).

Also, other network parameters should be set, according to information from your Telco.

Setting up a call

Go to the Call Menu and select Make a Call

- In the Call Menu, open Default Call Settings
- Set Net to ISDN
- To use these settings for this call only, select the OK button. To save the settings as your new Default Call Settings select Set as Default before pressing the OK button.
- Go on with your call and enter the number to be dialed.

Connecting the System, *continued..*

Connecting to Switched 56k Network

Using Telesync TS-256 SW56/ISDN adapter

This page describes how to connect the system to a SW56 network using a Telesync Adapter.

There are different Telesync Adapters for different configurations of SW56 networks.

The network types tested with the system are SW56 2Wire and 4Wire.

Connecting Cables

Connect the video system ISDN1 cable to the BRI S/T interface on the Telesync Adapter.

Connect the two SW56 cables from the Telesync adapter Line 1 and Line 2 to the SW56 network.

Configure the Video system

To configure the video system go to Control Panel > Network > ISDN/External/Leased E1/T1 and:

- Set Network Type to ISDN-BRI
- Set the ISDN Switch Type to National ISDN

Go to Line 1 Setup:

- Enable Line 1, set to On
- NUMBER1: enter the number from the first SW56 line
- NUMBER2: enter the number from the second SW56 line
- SPID1: enter the number from the first SW56 line
- SPID2: Leave blank
- Disable unused lines.

Check if you need to configure the Advanced ISDN Settings.

Setting up a call

Go to the Call Menu and select Make a Call

- In the Call Menu, open Default Call Settings
- Set Net to ISDN
- Set Bandwidth to 128 kbps
- A field for the 2nd ISDN number will pop up in Call Settings. Enter the second ISDN number in the Number2 field.
- Set Restrict (56k) to On.
- To use these settings for this call only, select the OK button. To save the settings as your new Default Call Settings select Set as Default before pressing the OK button.
- Go on with your call and enter the number to be dialed.

Setting up Bonded ISDN Calls

H.221 or 2x64 (2x56) Calling

Bonded ISDN calls are used when bridging of two or more ISDN channels to achieve higher data rates.

Some older or low end video systems do not have the ability to make bonded ISDN calls. In these cases it is necessary to dial both ISDN numbers separately to call those systems.

These types of calls are often referred to as

- H.221 calls
- 2 x 64 calls
- 2 x 56 calls

– as making 2 x 64 kbps or 2 x 56 kbps calls to the same system.

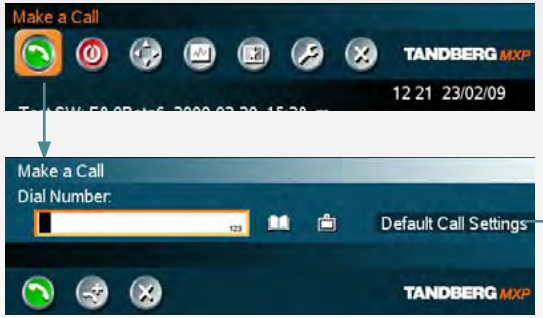

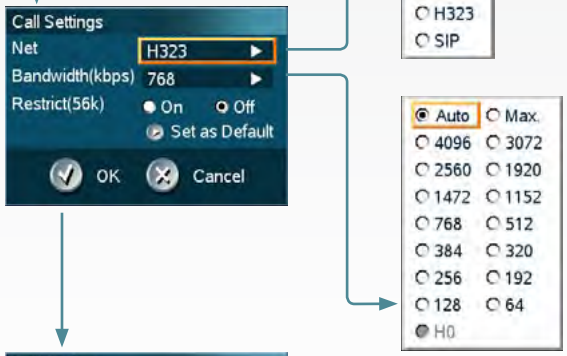

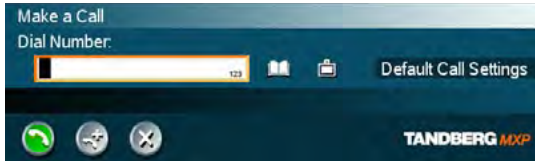

Setting up a call

1. Go to the Call Menu and select Make a Call.
2. In the Call Menu, open Default Call Settings.
3. Set Net to H.320 (ISDN).
4. Set Bandwidth to 128 kbps.
5. A field for the 2nd ISDN number will pop up in Call Settings. Enter the second ISDN number in the Number2 field. For 128 kbps calls that uses bonding, just ignore the second number field.
6. Save
   - To save the settings as your new Default Call Settings select Set as Default before pressing the OK button.
   - To use these settings for this call only, select the OK button.
7. In the Make a Call menu, enter the number to be dialed.

Using the file system

It is possible to access a file directory within the TANDBERG video system by means of ftp or http:

Using a DOS window: `ftp <IP-address of system>`

Using a Web browser: `ftp://<IP-address of system>` or `http://<IP-address of system>`

Description of files

`all.prm` - Includes all settings in the system (including directory)

`dir.prm` - Directory entries (up to 200 entries)

`event.log` - An event log that logs fault situations etc.

`sw.pkg` - An overview of the system software

`globdir.prm` - Contains up to 400 global directory entries. These entries can not be edited from the system, but can be edited as a text-file.

Snapshot files

Web Snapshot files are accessible by ftp or http. Web snapshots are not generated if the conference is encrypted.

`site0.jpg` - Snapshot of current stream if MultiSite.

`main.jpg` - Snapshot of selfview.

`site1.jpg` - Snapshot of decoded stream if point-to-point.

`duo.jpg` - Snapshot of the encoded stream if transmitting DuoVideo and the decoded stream if receiving DuoVideo.

Configure the video system for snapshots

To enable the system to generate JPEG snapshots and provide them when requested via a web interface (as http or via ftp get), go to Control Panel > Video and set the Web snapshot to On.

NOTE: The IP addresses used in the examples to the right are for educational purpose. To find the IP Address of your system check the System Information in the Diagnostics menu.

Using a DOS window to access a JPG-file

Open a DOS window and go to the folder where the file is saved. For example type:

```
cd pictures
```

```
ftp <IP-address of system>
bin
get /tmp/snapshots/xxx.jpg
```

INFO: Before issuing the `get` command the `bin` command must be executed to enable binary transmission of jpg-files. If not, the jpg-files will be corrupted.

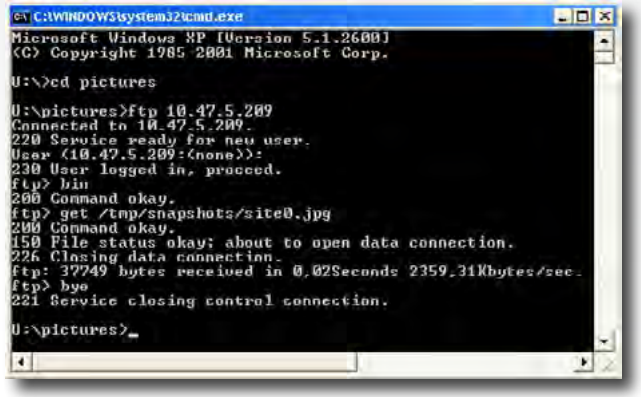

Using a Web browser to access a JPG-file

`http://<IP-address of system>/tmp/snapshots/site0.jpg`

Enter the address, as described above to generate a snapshot, and the picture `<site0.jpg>` will appear in your browser.

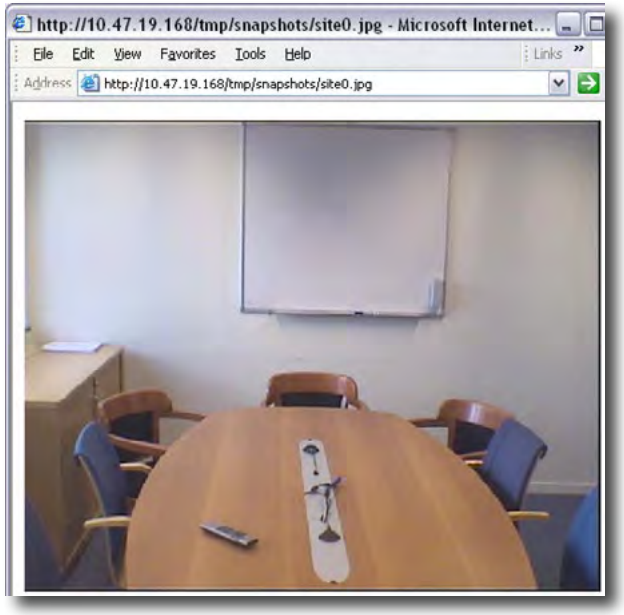

Apply your own logo

You can apply your own logo to be displayed on the video system. The new logo will be displayed the next time you restart your system.

Recommended maximum size is: 704 × 576 pixels and the file format is JPG.

NOTE! If the file is too large, the logo will not be displayed.

NOTE: The IP addresses used in the examples are for educational purpose. To find the IP Address of your system check the System Information in the Diagnostics menu.

Apply your own logo using a DOS window

Open a DOS window and go to the folder where your logo is located.

- Type: `ftp <IP-address of your local system>`
- Go to the user folder: type `cd user`
- Upload your logo: type `put <logo.jpg>`.
- Restart the system

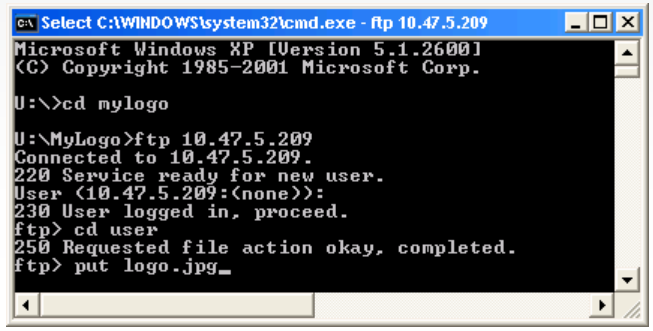

Apply your own logo using a web browser

Open a Web Browser and type `http://<IP-address of your local system>`

- Select Endpoint Configuration > `Files`
- Locate your <logo.jpg> file and press Upload
- Restart the system

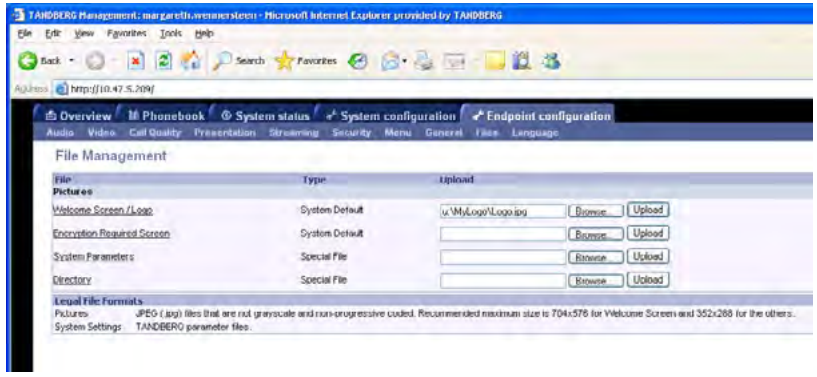

Interfaces and sockets

Codec 3000 MXP/3000 MXP Net Interfaces and sockets

NOTE! For a complete description of the sockets, pin-outs and interface groups, see the Physical Interface Guide for the Cisco TelePresence MXP Series Codecs.

Codec 3000 MXP

DC power socket and On/Off switch | Network interface sockets | Video sockets | Audio sockets | Ethernet | ISDN BRI

The Codec 3000 MXP comes in two flavours – with ISDN BRI sockets (upper) or with Net socket (lower).

Codec 3000 MXP Net

DC power socket and On/Off switch | Network interface sockets | Video sockets | Audio sockets | Ethernet | Net socket

Interfaces and sockets, *continued..*

Codec 6000 MXP interfaces and sockets

NOTE! For a complete description of the sockets, pin-outs and interface groups, see the Physical Interface Guide for the Cisco TelePresence MXP Series Codecs.

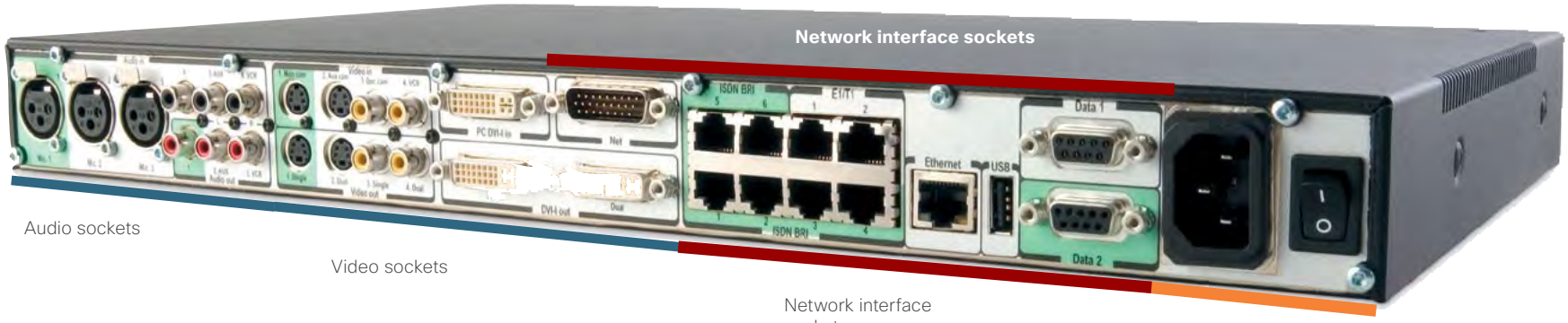

Interfaces and sockets, *continued..*

1700 MXP interfaces and sockets

Rear Panel Sockets

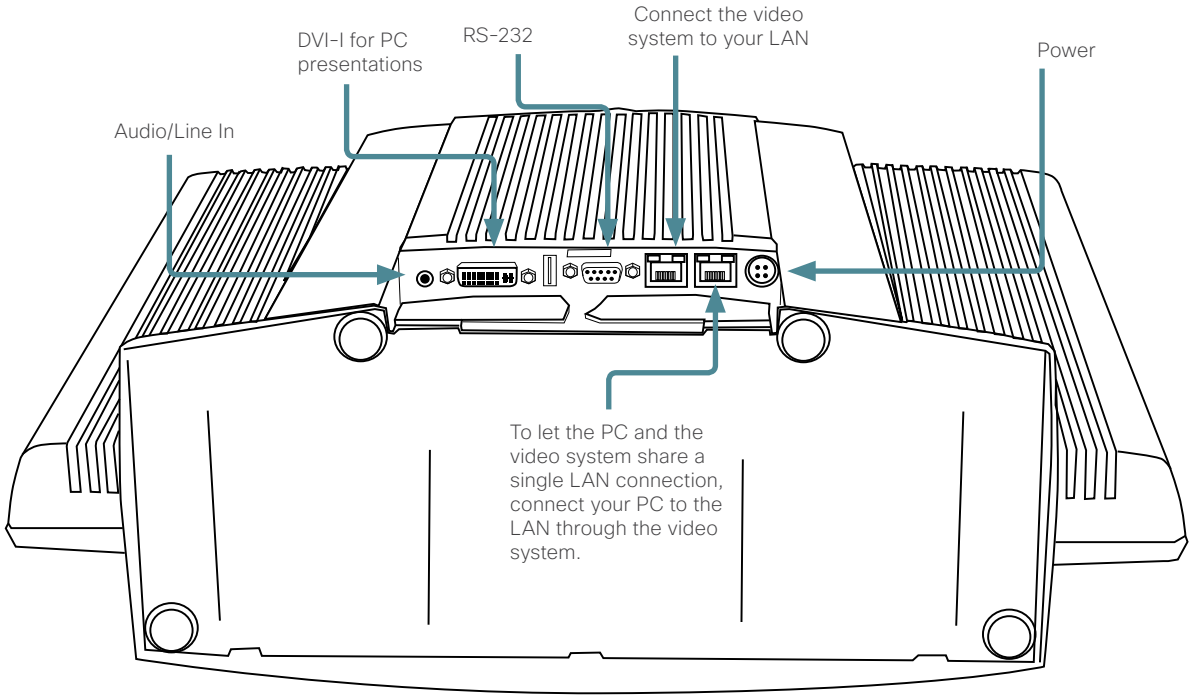

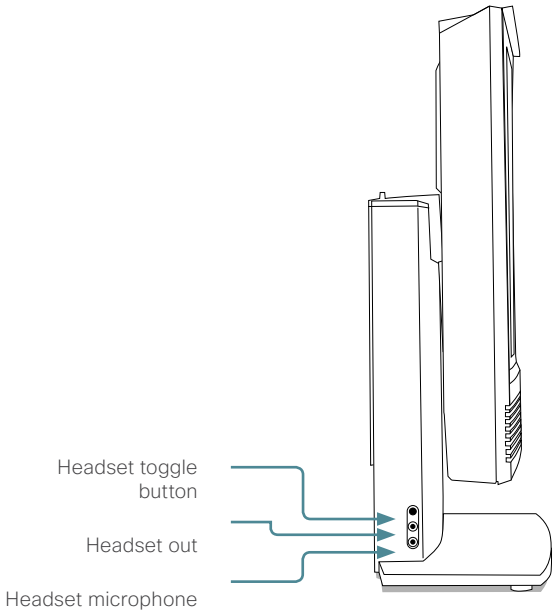

1700 MXP Interfaces and sockets, cont...

Video, Audio and Network

Video Input

- 1 x VGA/DVI-I (DVI = Digital Visual Interface, I = Integrated Digital & Analog) input, analog or digital.

VGA formats supported on DVI-I in

SVGA (800x600) 60Hz, 72Hz, 75Hz, 85Hz
XGA (1024x768) 60 Hz, 70Hz, 75Hz
SXGA (1280x1024) 60Hz
HD720p (1280x720) 50 Hz, 60 Hz
WXGA (1280x768, 1280x800, 1360x768, 1366x768 (@60 Hz))

More information

Read more about the DVI (Digital Visual Interface) and DVI Cables in the beginning of the Peripheral Equipment section.

Go to The Digital Visual Interface (DVI)
Go to DVI Cables - The VGA to DVI
Go to DVI Cables - The VGA to DVI-A

Headset

- 1 x Headset Toggle button
- 1 x Headset Input
- 1 x Headset Output
- 1 x Audio/Line In connector

Audio Line In Connector

- Signal type: Unbalanced
- Connector (codec): 3.5mm stereo jack, sleeve-gnd, tip-left, ring-right
- Input impedance: 56K ohms
- Signal levels: See table overleaf

Go to the next page to see all audio level settings tables for the 1700 MXP.

All audio inputs are active by default. For further information, refer to chapter Audio.

Ethernet

- 1 x Ethernet (RJ-45 Jack) LAN interface (10/100 Mb) up to 768kbps. To connect the video system to your LAN.
- 1 x Ethernet (RJ-45 Jack) LAN interface (10/100 Mb) up to 768kbps. To let the PC and the video system share a single LAN connection, connect your PC to the LAN through the video system.

To connect the system to a LAN, use the Ethernet cable provided by Cisco (or a standard Ethernet cable). If no LAN is available and the codec is connected directly to a computer, use a crossover cable.

Ethernet cable

Wiring diagram standard cable

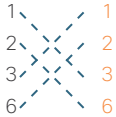

Wiring diagram crossover cable

RJ-45 Connector pin-out

If no DHCP server is controlling the small LAN, which has been created between the computer and the video system, then static TCP/IP settings must be used. When configuring a back-to-back connection between the PC and the video system, make sure both static IP addresses exist on the same subnet.

1700 MXP Interfaces and sockets, cont...

Audio level settings table

The level settings can be adjusted independently for Line in Left, Line in Right, Headset Mic and Headset Out.

Go to the Control Panel Library to see a full description of the Audio Level Settings for the 1700 MXP.

TIP! Since the unit has built-in microphones and loudspeakers, the level settings apply to Line Inputs level and the headset loudspeakers/microphone only.

	Headset input	Headset Output
Signal type	Unbalanced	Unbalanced
Connector (codec)	3.5mm jack, sleeve-gnd, tip-microphone	3.5mm stereo jack, sleeve-gnd, tip-left, ring-right
Impedance	2200 ohms	Low

Input is System Input (from Headset), Output is System Output (to Headset)

Audio Line In Connector Specification			
Signal Levels	*Clipping Level*		*Nominal Level*
Input menu level setting	*Vpp*	*dBu*	*dBu*
0,0 dB	15,5 Vpp	17,0 dBu	-1,0 dBu
1,5 dB	13,0 Vpp	15,5 dBu	-2,5 dBu
3,0 dB	11,0 Vpp	14,0 dBu	-4,0 dBu
4,5 dB	9,2 Vpp	12,5 dBu	-5,5 dBu
6,0 dB	7,8 Vpp	11,0 dBu	-7,0 dBu
7,5 dB	6,5 Vpp	9,5 dBu	-8,5dBu
9,0 dB	5,5 Vpp	8,0 dBu	-10,0 dBu
10,5 dB	4,6 Vpp	6,5 dBu	-11,5 dBu
12,0 dB	3,9 Vpp	5,0 dBu	-13,0 dBu
13,5 dB	3,3 Vpp	3,5 dBu	-14,5 dBu
15,0 dB	2,8 Vpp	2,0 dBu	-16,0 dBu
16,5 dB	2,3 Vpp	0,5 dBu	-17,5 dBu
18,0 dB	2,0 Vpp	-1,0 dBu	-19,0 dBu
19,5 dB	1,6 Vpp	-2,5 dBu	-20,5 dBu
21,0 dB	1,4 Vpp	-4,0 dBu	-22,0 dBu
22,5 dB	1,2 Vpp	-5,5 dBu	-23,5 dBu

Figures shown INVERTED denote default values.

Headset Output Levels (from System)				Headset Input Levels (to System)			
Signal levels	*Abs. max output level*		*Nominal level*	*Signal Levels*	*Clipping Level*		*Nominal Level*
Output menu level setting	*Vpp*	*dBu*	*dBu*	*Input menu level setting*	*mVpp*	*dBu*	*dBu*
0,0 dB	0,2 Vpp	-20,4 dBu	-38,4 dBu	0,0 dB	80 mVpp	-28,8 dBu	-46,8 dBu
1,5 dB	0,2 Vpp	-18,9 dBu	-36,9 dBu	1,5 dB	67 mVpp	-30,3 dBu	-48,3 dBu
3,0 dB	0,3 Vpp	-17,4 dBu	-35,4 dBu	3,0 dB	57 mVpp	-31,8 dBu	-49,8 dBu
4,5 dB	0,4 Vpp	-15,9 dBu	-33,9 dBu	4,5 dB	48 mVpp	-33,3 dBu	-51,3 dBu
6,0 dB	0,4 Vpp	-14,4 dBu	-32,4 dBu	6,0 dB	40 mVpp	-34,8 dBu	-52,8 dBu
7,5 dB	0,5 Vpp	-12,9 dBu	-30,9 dBu	7,5 dB	34 mVpp	-36,3 dBu	-54,3 dBu
9,0 dB	0,6 Vpp	-11,4 dBu	-29,4 dBu	9,0 dB	28 mVpp	-37,8 dBu	-55,8 dBu
10,5 dB	0,7 Vpp	-9,9 dBu	-27,9 dBu	10,5 dB	24 mVpp	-39,3 dBu	-57,3 dBu
12,0 dB	0,8 Vpp	-8,4 dBu	-26,4 dBu	12,0 dB	20 mVpp	-40,8 dBu	-58,8 dBu
13,5 dB	1,0 Vpp	-6,9 dBu	-24,9 dBu	13,5 dB	17 mVpp	-42,3 dBu	-60,3 dBu
15,0 dB	1,2 Vpp	-5,4 dBu	-23,4 dBu	15,0 dB	14 mVpp	-43,8 dBu	-61,8 dBu
16,5 dB	1,4 Vpp	-3,9 dBu	-21,9 dBu	16,5 dB	12 mVpp	-45,3 dBu	-63,3 dBu
18,0 dB	1,7 Vpp	-2,4 dBu	-20,4 dBu	18,0 dB	10 mVpp	-46,8 dBu	-64,8 dBu
19,5 dB	2,0 Vpp	-0,9 dBu	-18,9 dBu	19,5 dB	8 mVpp	-48,3 dBu	-66,3 dBu
21,0 dB	2,4 Vpp	0,6 dBu	-17,4 dBu	21,0 dB	7 mVpp	-49,8 dBu	-67,8 dBu
22,5 dB	2,8 Vpp	2,1 dBu	-15,9 dBu	22,5 dB	6 mVpp	-51,3 dBu	-69,3 dBu

Figures shown INVERTED denote default values.

1700 MXP Interfaces and sockets, cont...

Data port

The data port(s) are implemented as Data Communications Equipment (DCE). The connectors used are female 9-pin D-subs.

Data Port - Pin Specification

Signal Name	*Direction*	*Pin Number*
Carrier detect, CD	From DCE	1
Receive data, RXD	From DCE	2
Transmit data, TXD	To DCE	3
Data terminal ready, DTR	From DCE	4
Signal ground, GND	-	5
Data set ready, DSR	From DCE	6
Ready to send, RTS	To DCE	7
Clear to send, CTS	From DCE	8
Ring indicator, RI	From DCE	9

Interfaces and sockets, *continued..*

1000 MXP interfaces and sockets

Rear Panel Sockets

Rear Panel Sockets

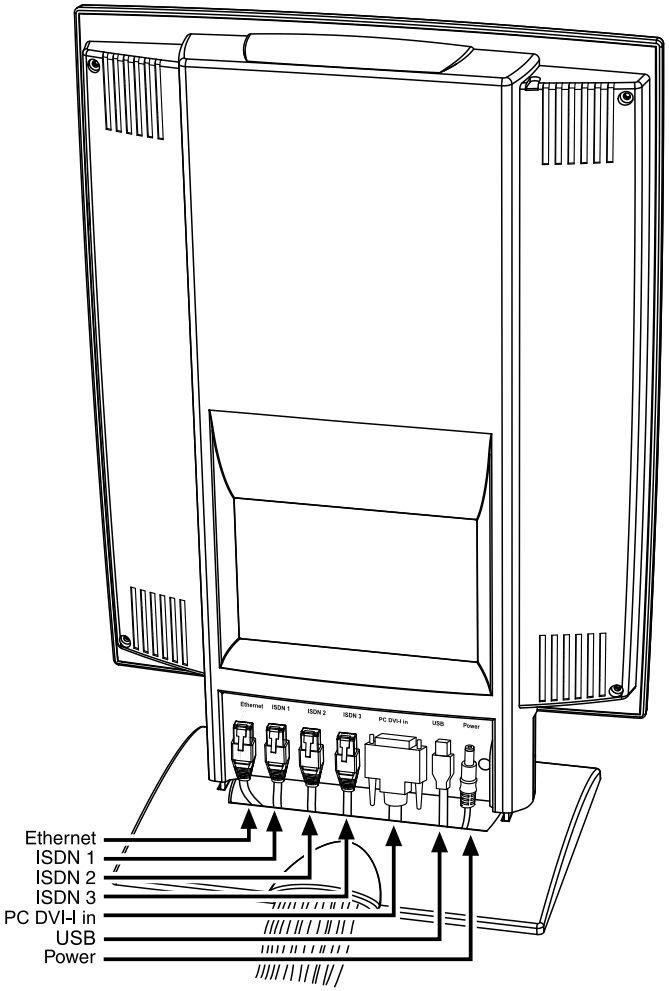

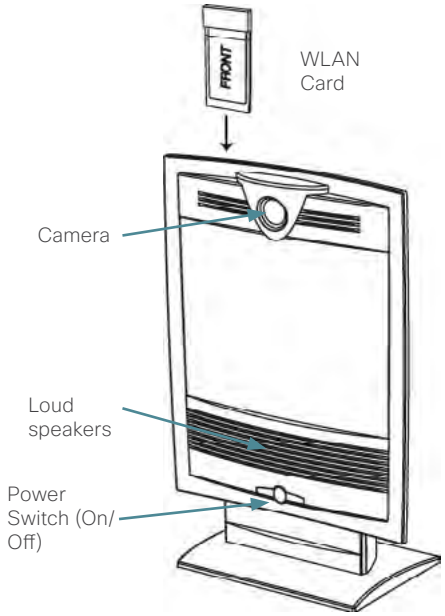

Kensington Lock

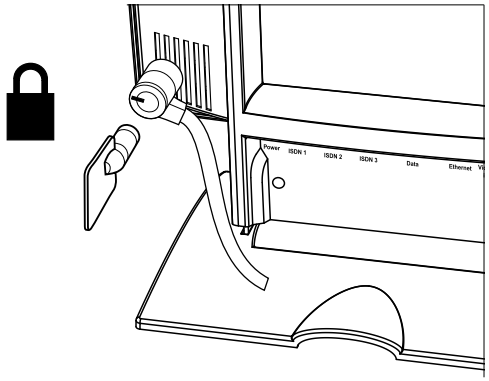

1000 MXP, Compass/Utility MXP Interfaces and sockets, cont...

Video, Audio and Network

Video Input

- 1 x VGA/DVI-I (DVI = Digital Visual Interface, I = Integrated Digital & Analog) input, analog or digital.

VGA formats supported on DVI-I in

- SVGA (800x600) 60Hz, 72Hz, 75Hz, 85Hz
- XGA (1024x768) 60 Hz, 70Hz, 75Hz
- SXGA (1280x1024) 60Hz
- HD720p (1280x720) 50 Hz, 60 Hz

Read more

Read more about the DVI (Digital Visual Interface) and DVI Cables in the beginning of the Peripheral Equipment section.

Go to The Digital Visual Interface (DVI)

Go to DVI Cables - The VGA to DVI

Go to DVI Cables - The VGA to DVI-A

Headset

The unit has a built-in headset connector, 2.5mm 3-pole mini-jack.

The headset plug must have the following configuration:

- Tip: microphone output
- Ring: earphone (receiver input)
- Sleeve: common/ground

All audio inputs are active by default. For further information, refer to chapter Audio.

INFO: Headsets with the microphone positioned in front of the user's mouth, connected to the earphone through a rod, tend to give more echo than earbud headsets with the microphone attached to the cord. The Plantronics MX100 headset can be used (http://www.plantronics.com, products mobile).

Activate the headset by pressing the button in front, located below of the TANDBERG logo. Deactivate the headset by pressing the button once more.

Microphone

The microphone is integrated and located at the edge on the left hand side of the unit.

Ethernet

The unit has 1 x Ethernet (RJ-45 Jack) LAN interface (10/100 Mb) up to 768kbps

To connect the system to a LAN, use the Ethernet cable provided by Cisco (or a standard Ethernet cable). If no LAN is available and the codec is connected directly to a computer, use a crossover cable.

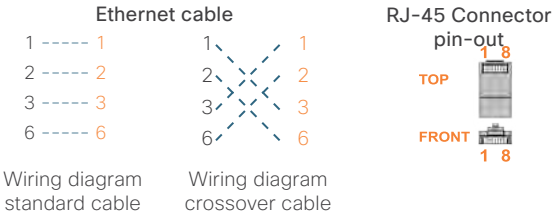

Wiring diagram standard cable

Wiring diagram crossover cable

If no DHCP server is controlling the small LAN, which has been created between the computer and the video system, then static TCP/IP settings must be used. When configuring a back-to-back connection between the PC and the video system, make sure both static IP addresses exist on the same subnet.

ISDN BRI Interface:

The unit has 3 x ISDN I.420 (RJ-45 Jack) Basic Rate Interface S/T (2B+D), 128 kbps per ISDN I/F

To connect the system to BRI, use the ISDN cable provided by Cisco (or a standard BRI cable). The pinout of the S/T interface is:

S/T Interface	
BRI	*Pin out*
Pin 3	TX+
Pin 4	RX+
Pin 5	RX–
Pin 6	TX–

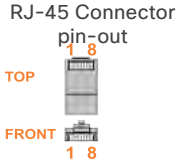

Interfaces and sockets, *continued..*

Edge 95/75 MXP interfaces and sockets

Rear Panel Sockets

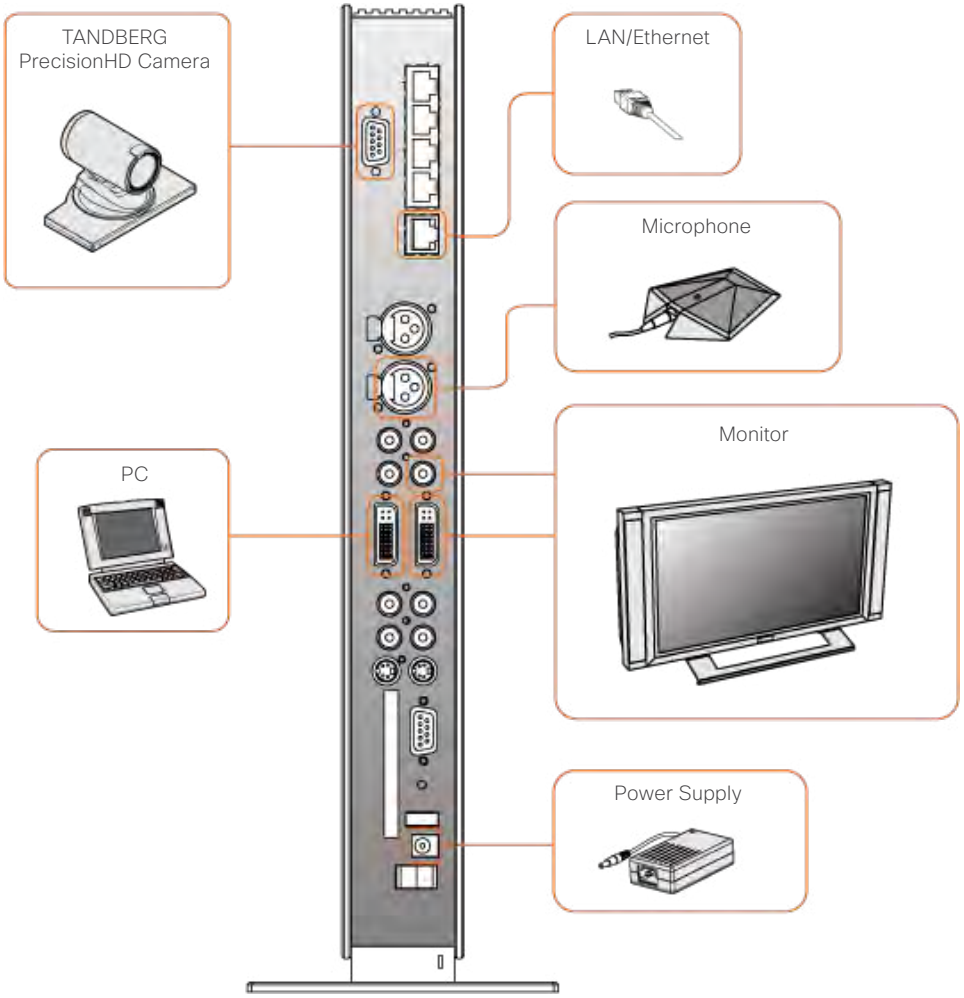

Edge 95/75 MXP Interfaces and sockets, cont...

Video input/output and Audio input

5 Video Inputs

- 1 (one) 9 Pin DSUB is used for connecting the PrecisionHD Camera.
- 1 video inputs supporting S-Video through Mini-DIN connectors.
- 2 video inputs supporting composite signals through RCA connectors.
- 1 VGA/DVI-I (DVI = Digital Visual Interface, I = Integrated Digital & Analog) input, analog or digital.

Levels

Composite: 1 Vpp, 75 ohm

S-Video (Y/C):

Y: 1 Vpp, 75 ohm

C (PAL): 0.3 Vpp, 75 ohm

C (NTSC): 0.28 Vpp, 75 ohm

The system will automatically adapt to a PAL or NTSC input.

VGA formats supported on DVI-I in

SVGA (800x600) 60Hz, 72Hz, 75Hz, 85Hz

XGA (1024x768) 60 Hz, 70Hz, 75Hz

SXGA (1280x1024) 60Hz

HD720p (1280x720) 50 Hz, 60 Hz

WXGA (1280x768, 1280x800, 1360x768, 1366x768 (@60 Hz))

Read More

Read more about the DVI (Digital Visual Interface) and DVI Cables in the beginning of the Peripheral Equipment section.

Go to The Digital Visual Interface (DVI)

Go to DVI Cables - The VGA to DVI

Go to DVI Cables - The VGA to DVI-A

4 Video Outputs

- 1 S-Video output, Mini-DIN connector.
- 2 composite video outputs, RCA connectors.
- 1 VGA/DVI-I (DVI = Digital Visual Interface, I = Integrated Digital & Analog) output, analog or digital.

The first Mini-DIN connector and the first RCA connector provide main video (incoming/outgoing video and menus). The other connector provides selfview/still image/DuoVideo. The outputs are always active. The format of the output will be either PAL or NTSC depending on your country's standard video format. The VGA/DVI output provides either main monitor video or second monitor video depending on menu configuration.

Levels

Composite: 1 Vpp, 75 ohm

S-Video (Y/C):

Y: 1 Vpp, 75 ohm

C (PAL): 0.3 Vpp, 75 ohm

C (NTSC): 0.28 Vpp, 75 ohm

VGA formats supported on DVI-I out

SVGA (800x600) 75Hz

XGA (1024x768) 60Hz

WXGA (1280x768) 60Hz

HD720p (1280x720) 50 Hz, 60 Hz

Read more

Read more about the DVI (Digital Visual Interface) and DVI Cables in the beginning of the Peripheral Equipment section.

Go to The Digital Visual Interface (DVI)

Go to DVI Cables - The VGA to DVI

Go to DVI Cables - The VGA to DVI-A

4 Audio Inputs

- 2 microphone inputs (balanced, 24V phantom powered) via XLR connectors.
- 2 audio inputs (line level) via RCA connectors.

All audio inputs are active by default. For further information, refer to the description of Audio in the Control Panel Library.

Audio Input Connector Specification

Connector Label	*Microphone(s)*	*Audio Input(s)*
Signal type	Balanced	Unbalanced
Copnnector (codec)	XLR-F, pin 1-gnd, pin 2 hot, pin 3-cold/neutral	Female RCA/ phono, sleeve-ground, centre-signal
Input Impedance	2400 ohms (pin 2-3)	10K ohms
Max input level when set to minimum input level	83 mVpp	15.5 Vpp
Max input level when set to maximum input level	6.2 mVpp	1.2 Vpp
Range, menu adjustable input gain	22.5 dB (16 steps of 1.5 dB)	22.5 dB (16 steps of 1.5 dB)
Phantom power voltage	24 V +/- 5%	-
Phantom power resistor, pin 2	1200 ohms	-
Phantom power resistor, pin 2	1200 ohms	-
Max phantom power current pr mic	12 mA	-

Edge 95/75 MXP Interfaces and sockets, cont...

Audio output, Network and ISDN BRI

2 Audio Outputs

- 1 output (line level) via RCA connector providing audio from far end in addition to dial tones. This output is used by the monitor. This output also supports S/PDIF.
- 1 VCR output (line level) via RCA connector providing a mixed signal between audio from the local side (except from the VCR input) and audio from the far end. This output is intended for connection to a VCR.

SPDIF - Sony/Philips Digital Interface

Audio Output Connector Specification	
Connector Label	*Audio Output(s)*
Signal type	Unbalanced
Copnnector (codec)	Female RCA/phono, sleeve-ground, centre-signal
Output Impedance	680 ohms
Max output level when set to maximum output level and volume control set to max	15.5 Vpp
Max output level when set to minimum output level and volume control set to max	1.2 Vpp
Range, menu adjustable output gain	22.5 dB (16 steps of 1.5 dB)*
Volume control attenuation (audio out 1)	0 to 21 dB + mute (steps of 1.5 dB)

* Additional attenuation is possible on room/loudspeaker audio output using the volume control setting

Ethernet

- Edge 75 MXP: 1 x Ethernet (RJ-45 Jack) LAN interface (10/100 Mb) up to 768kbps
- Edge 95 MXP: 1 x Ethernet (RJ-45 Jack) LAN interface (10/100 Mb) up to 2.3 Mbps, depending on the bandwidth option installed.

To connect the system to a LAN, use the Ethernet cable provided by Cisco (or a standard Ethernet cable). If no LAN is available and the codec is connected directly to a computer, use a crossover cable.

Ethernet cable

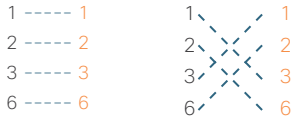

Wiring diagram standard cable

Wiring diagram crossover cable

RJ-45 Connector pin-out

If no DHCP server is controlling the small LAN, which has been created between the computer and the video system, then static TCP/IP settings must be used.

When configuring a back-to-back connection between the PC and the video system, make sure both static IP addresses exist on the same subnet.

ISDN-BRI Interface

- 4 x ISDN I.420 (RJ-45 Jack) Basic Rate Interface S/T (2B+D), 128 kbps per ISDN I/F

To connect the system to BRI, use the ISDN cable provided by Cisco (or a standard BRI cable). The pinout of the S/T interface is:

S/T Interface	
BRI	*Pin out*
Pin 3	TX+
Pin 4	RX+
Pin 5	RX-
Pin 6	TX-

RJ-45 Connector pin-out

Edge 95/75 MXP Interfaces and sockets, cont...

Data port and Camera port

Data port

The data port(s) are implemented as Data Communications Equipment (DCE). The connectors used are female 9-pin D-subs.

Data Port - Pin Specification		
Signal Name	*Direction*	*Pin Number*
Carrier detect, CD	From DCE	1
Receive data, RXD	From DCE	2
Transmit data, TXD	To DCE	3
Data terminal ready, DTR	From DCE	4
Signal ground, GND	-	5
Data set ready, DSR	From DCE	6
Ready to send, RTS	To DCE	7
Clear to send, CTS	From DCE	8
Ring indicator, RI	From DCE	9

Camera Port

Pin-outs for the camera port when using the PrecisionHD Camera.

Pinouts when using PrecisionHD Camera	
PRI	*Pinout*
Pin 8	+ 12 V (presence 2.8 mA current source when connected in daisy chain)
Pin 7	GND
Pin 6	TXD (out)
Pin 5	Video LVDS-
Pin 4	Video LVDS+
Pin 3	RXD (in)
Pin 2	GND
Pin 1	+ 12 V

Camera Cable

The Edge 75/85/95 MXP system is shipped with a PC cable with integrated audio.

The enclosed Cisco Camera Cables must be used! Do not use other camera cables as this might cause problems with the transfer of video signals from the PrecisionHD Camera.

Read more

Read more about the DVI (Digital Visual Interface) and DVI Cables in the beginning of the Peripheral Equipment section.

Go to The Digital Visual Interface (DVI)

Go to DVI Cables - The VGA to DVI

Go to DVI Cables - The VGA to DVI-A

Cable specifications

The Digital Visual Interface (DVI)

The Digital Visual Interface (DVI) is a video interface standard designed to maximize the visual quality of digital display devices such as flat panel LCD monitors, digital projectors and high-end video graphics cards.

The Cisco codec contains a DVI-I plug that can transmit either digital DVI signals or standard analog VGA signals, depending on what type of monitor is connected.

DVI Specifications

Cisco DVI-I follows the VESA Monitor Timing Standard v1.08, also knows as Display Monitor Timing (DMT).

VGA formats supported on DVI-I in

- SVGA (800x600) 60Hz, 72Hz, 75Hz, 85Hz
- XGA (1024x768) 60Hz, 70Hz, 75Hz
- SXGA (1280x1024) 60Hz
- HD720p (1280x720) 50Hz, 60Hz
- WXGA (1280x768, 1280x800, 1360x768, 1366x768 (@60 Hz))

Supported DVI Cables

Cisco supports the DVI-D (digital only), DVI-A (analog only) and DVI-I (digital & analog) cables:

- DVI-D Single-Link - Transmits digital TMDS signals
- DVI-A - Transmits analog VGA signals
- DVI-I Single-Link - Transmits either digital or analog signals.

TMDS - Transition Minimized Differential Signaling is a technology for transmitting high-speed serial data and is used by the DVI and HDMI video interfaces.

DVI Cable Length

It is possible to extend existing DVI cables by the use of extension cables. The maximum cable length however is 5 meters. Going beyond that may result in quality loss.

The DVI-I Connector

The illustration shows a female DVI socket from the front.

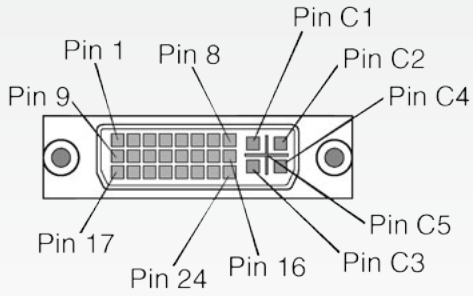

The DVI-I Pin-Out table

The table shows the DVI-I combined analog and digital connector pin assignments

DVI-I Combined Analog and Digital Connector Pin Assignments

PIN	*Signal Assignment*	*PIN*	*Signal Assignment*
1	TMDS Data2-	16	Hot Plug Detect
2	TMDS Data2+	17	TMDS Data0-
3	TMDS Data2/4 Shield	18	TMDS Data0+
4	TMDS Data4-	19	TMDS Data0/5 Shield
5	TMDS Data4+	20	TMDS Data5-
6	DDC Clock	21	TMDS Data5+
7	DDC Data	22	TMDS Clock Shield
8	Analog Vertical Sync	23	TMDS Clock+
9	TMDS Data1-	24	TMDS Clock-
10	TMDS Data1+	C1	Analog Red
11	TMDS Data1/3 Shield	C2	Analog Green
12	TMDS Data3-	C3	Analog Blue
13	TMDS Data3+	C4	Analog Horizontal Sync
14	+5V Power	C5	Analog Ground (return for R, G and B signals)
15	Ground (return for +5V, HSync and VSync)		

Cable specification, *continued..*

The VGA to DVI Cable

The following systems are shipped with the VGA to DVI PC cable with integrated audio:

- Cisco TelePresence Codec 6000 MXP
- Cisco TelePresence Codec 3000 MXP
- Cisco TelePresence Edge 75/95 MXP

VGA - DVI Connector with audio

Cable: 5 coax*30#1P*28#*5C*28#

UL Style: UL 20276

75 Ohm, Coax

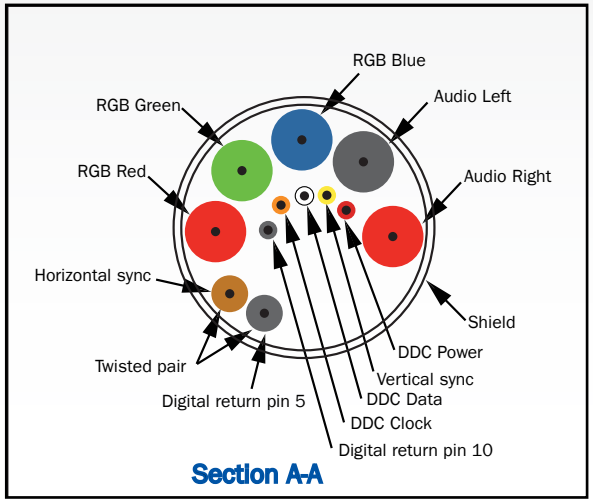

PC cable, VGA - DVI with integrated audio

DVI-A Plug + 2xRCA Plug to VGA Plug + 3.5mm Stereo Plug, length 6m.

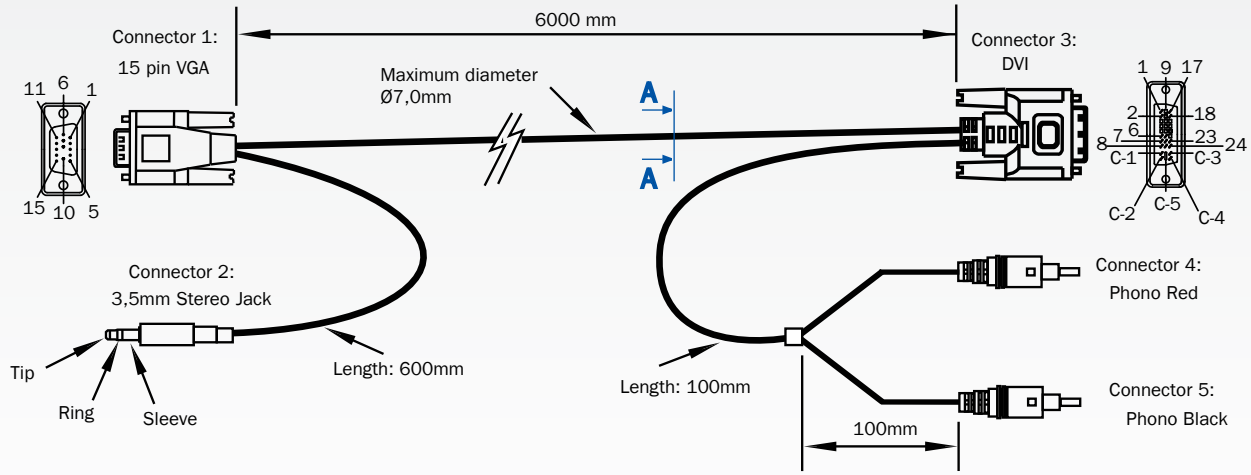

PC Cable, VGA - DVI with Integrated Audio						
Signal Name	*CON1 Pin*	*CON2 Pin*	*CON3 Pin*	*CON4 Pin*	*CON5 Pin*	*Cable Color*
DDC Clock	15		6			Orange
DDC Data	12		7			White
Vertical Sync	14		8			Yellow
DDC Power (+5V)	9		14, 16			Red
Digital Return	5, 10		15			Black
RGB Red	1		C1			Red Coax
RGB Green	2		C2			Green Coax
RGB Blue	3		C3			Blue Coax
Horisontal Sync	13		C4			Brown
RGB Return	6, 7, 8		C5			RGB Coax Shield
Outer Shield Ground	Shell		Shell			Outer Shield
Audio Left		Tip			Centre	Audio Black
Audio Right		Ring		Centre		Audio Red
Audio GND		Sleeve		GND	GND	Audio Shield

Cable specification, *continued..*

The VGA to DVI-A Cable

VGA to DVI-A Cable Pin Assignments

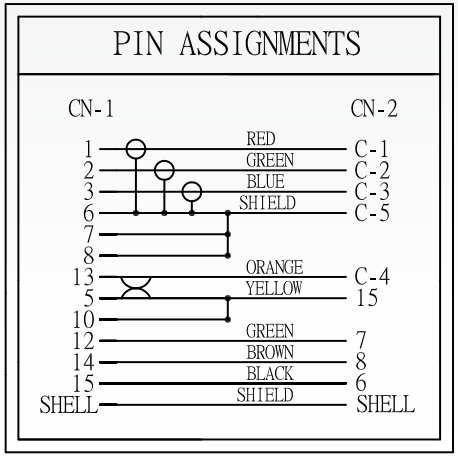

VGA to DVI-A Cable Pinouts

VGA to DVI-A cable male-male 5m black, maximum length 5m.

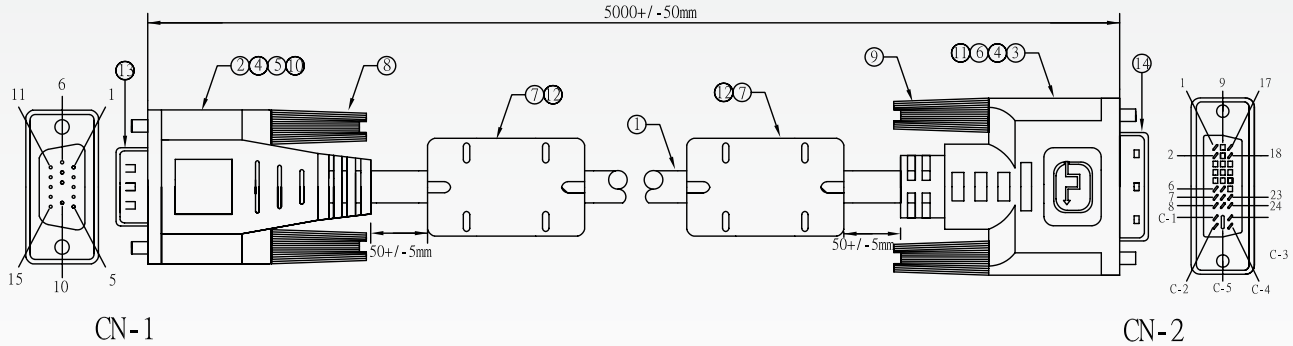

PC Cable, VGA - DVI with Integrated Audio		
No	*Item*	*Description*
1	Cable	UL20276 3Coax*30#+IP*28#+5C*28#+AEB Black OD:7.0mm L-5000mm
2	Connector	HDD 15P Male Black
3	Connector	HDD 17P Male Black
4	Tube	PE Tube Black OD:1.5*10 / 1.0*15 / 1.5*8 / 2.5*10 / 1.5*15 / 5.0*10 mm
5	Metal Can	HDD 15P Male OD:8.5mm
6	Metal Can	HDD 17P Male OD:8.5mm
7	Ferrite	RH 16*28.5*8.0mm
8	Screw	4-40UNC 4*47mm Molded PVC 30P Black
9	Screw	4-40UNC 4*47mm Molded PVC 30P Black
10	Molded	PVC Over mold 45P Black [A991826]
11	Molded	PVC Over mold 45P Black [A2K1188]
12	Molded	PVC Over mold 45P Black [A2K1017]
13	Dust Cover	HDD 15P Dust Cover PE Mold [A2T0225]
14	Dust Cover	DVI Dust Cover PE Mold [A2E1544]

Cable specification, *continued..*

Applies to Cisco TelePresence MXP and TANDBERG Classic Endpoints that supports External Network

External Network Pinout

With respect to signals on the NET port:

- For balanced signals a “0”=low voltage is defined as terminal A positive with respect to terminal B.
- For unbalanced signals a “0”= low voltage is defined as terminal positive with respect to GND.

Pin-Out on 26-pin HD Connector J5

Pin No	*Standard*				*Signal Dir.*	*Call Control (menu settings)*			*Mnemonics*
	V35	*RS449*	*RS366*	*X21*		*RS366*	*Leased Line*	*Data Trig. Manual*	
1	GND	GND	GND	GND					Frame Ground (connected to GND)
2			DPR		Output	x			Digit present
3			ACR		Input	x			Abandon Call & Retry
4			CRQ		Output	x			Call Request
5			PND		Input	x			Present Next Digit
6			DLO		Input	x			Data Line Occupied
7			NB1		Output	x			Digit bit 1
8			NB2		Output	x			Digit bit 2
9			NB4		Output	x			Digit bit 3
10			NB8		Output	x			Digit bit 4
11	SD (A)	SD (A)		T (A)	Output	x	x	x	Send Data / Transmit
12	SD (B)	SD (B)		T (B)	Output	x	x	x	Send Data / Transmit
13	RD (A)	RD (A)		R (A)	Input	x	x	x	Receive Data
14	RD (B)	RD (B)		R (B)	Input	x	x	x	Receive Data
15	SCR (A)	SCR (A)		S (A)	Input	x	x	x	Signal Clock Receive / Receive Timing
16	SCR (B)	SCR (B)		S (B)	Input	x	x	x	Signal Clock Receive / Receive Timing
17	SCT (A)	SCT (A)			Input	x	x	x	Signal Clock Transmit / Send Timing
18	SCT (B)	SCT (B)			Input	x	x	x	Signal Clock Transmit / Send Timing
19	GND	GND							GND
20		TR (A)		C (A)	Output	x	x		Terminal Ready / Control
21		TR (B)		C (B)	Output	x	x		Terminal Ready / Control
22	RLSD (CD)	RR (A)		I (A)	Input	x	x		Received Line Signal Detector / Carrier Detect / Receiver Ready / Indication
23	GND (RLSD)	RR (B)		I (B)	Input	x	x		Received Line Signal Detector / Carrier Detect / Receiver Ready / Indication
24	RI	IC			Input	x			Ring Indicator / Incoming Call
25	LOS	LOS			Output	x	x		Loss Of Signal
26	DTR				Output	x	x		(Data) Terminal Ready

Cable specification, *continued..*

Applies to Cisco TelePresence MXP and TANDBERG Classic Endpoints that supports External Network

External network V.35 cable

Connector on cable at the Codec end:

- Female 26 pin high-density DSUB with thumbscrews.

Connectors on cable at V.35-adapter end:

- Male 34 pin Winchester (AMP part number 201357-1 or equivalent).

Cable length:

- Maximum 20 meters (65 feet) for cables using DTR, RI, or RLSD.
- Maximum 50 meters (170 feet) for cables not using DTR, RI or RLSD (data-triggered applications).

Cable type:

- Shielded.

Connector housing:

- Metal, with cable shield connected to metal housing at 26 pin connector end.

NOTE: For “Data-Triggered” leased-line applications, signals DTR, RI and RLSD are not used.

Pin-Out on V.35 Cable

Signal Name	*Female 26 pin DSUB Pin Number*	*Male 34 pin Wincester Pin Number*	*Comments*
Frame Ground	1	A	
Signal Ground	19, 23	B	
TX (A), Transmit data	11	P	Twisted pair
TX (B)	12	S	
RX (A), Receive data	13	R	Twisted pair
RX (B)	14	T	
RCLK (A), Receive clock	15	V	Twisted pair
RCLK (B)	16	X	
TCLK (A), Transmit clock	17	Y	Twisted pair
TCLK (B)	18	AA	
DTR	26	H, C	
RI	24	L, J	
RLSD	22	F	

Cable specification, *continued..*

Applies to Cisco TelePresence MXP and TANDBERG Classic Endpoints that supports External Network

External Network V.35/RS-366 Cable

Connector on cable at the Codec end:

- Female 26 pin high-density DSUB with thumbscrews.

Connectors on cable at V.35-adapter end:

- Male 34 pin Winchester (AMP part number 201357-1 or equivalent) and
- Male 25 pin DSUB with thumbscrews.

Cable length:

- Maximum 20 meters (60 feet).

Cable type:

- Shielded.

Connector housing:

- Metal, with cable shield connected to metal housing at 26 pin connector end.

Pin-Out on V.35 Cable and RS-366 Cable

Signal Name	*Female 26 pin DSUB Pin Number*	*Male 34 pin Wincester Pin Number*	*Male 25 pin DSUB Pin Number*	*Comments*
Frame Ground	1	A		
Signal Ground	19, 23	B		
TX (A), Transmit data	11	P		Twisted pair
TX (B)	12	S		
RX (A), Receive data	13	R		Twisted pair
RX (B)	14	T		
RCLK (A), Receive clock	15	V		Twisted pair
RCLK (B)	16	X		
TCLK (A), Transmit clock	17	Y		Twisted pair
TCLK (B)	18	AA		
DTR	26	H, C		
RI	24	L, J		
RLSD	22	F		
RS366 DPR	2		2	
RS366 ACR	3		3	
RS366 CRQ	4		4	
RS366 PND	5		5	
RS366 DLO	6		22	
RS366 NB1	7		14	
RS366 NB2	8		15	
RS366 NB4	9		16	
RS366 NB8	10		17	
RS366 GND	19		7	

Cable specification, *continued..*

Applies to Cisco TelePresence MXP and TANDBERG Classic Endpoints that supports External Network

External Network RS-449 Cable

Connector at the Tandberg end:

- Female 26pin High Density DSUB Newark P/N 50F2055 or Equivalent

Connector on RS-449:

- DSUB 37 pin Male

Pin-Out on RS-449 Cable

Signal Name	*Female 26 pin DSUB (Tandberg End) Pin Number*	*Male 37 pin DSUB (DCE End) Pin Number*	*Comments*
Frame Ground	1	1	
Signal Ground	19, 23	19, 30	
Send Data (A)	11	4	Twisted pair
Send Data (B)	12	22	
Send Timing (A)	17	5	Twisted pair
Send Timing (B)	18	23	
Receive Data (A)	13	6	Twisted pair
Receive Data (B)	14	24	
Receive Timing (A)	15	8	Twisted pair
Receive Timing (B)	16	26	
Terminal Ready (A)	26	12	
Receiver Ready (A)	22	13	Twisted pair
Receiver Ready (B)	23	31	
Incoming Call (A)	24	15	
LOS KG Resync	25	36	
Cable Labels	NET 1	RS449	

Cable specification, *continued..*

Applies to Cisco TelePresence MXP and TANDBERG Classic Endpoints that supports External Network

External Network RS-449/RS-366 Cable

Connector at the Tandberg end:

- Female 26pin High Density DSUB Newark P/N 50F2055 or Equivalent

Connector on RS-449:

- DSUB 37 pin Male

Connector on RS-366:

- DSUB 25 pin Male

Pin-Out on RS-449 Cable and RS-366 Cable

Signal Name	*Female 26 pin DSUB (Tandberg End) Pin Number*	*Male 37 pin DSUB (DCE End) Pin Number*	*Male 25 pin DSUB RS-366 Pin Number*	*Comments*
Frame Ground	1	1		Do not connect shield to FGND
Signal Ground	19	19, 30		
Send Data (A)	11	4		Twisted pair
Send Data (B)	12	22		
Send Timing (A)	17	5		Twisted pair
Send Timing (B)	18	23		
Receive Data (A)	13	6		Twisted pair
Receive Data (B)	14	24		
Receive Timing (A)	15	8		Twisted pair
Receive Timing (B)	16	26		
Terminal Ready (A)	26	12		
Receiver Ready (A)	22	13		Twisted pair
Receiver Ready (B)	23	31		
Incoming Call (A)	24	15		
LOS A	25	36		LOS A Unbalanced
RS366 DPR	2		2	
RS366 ACR	3		3	
RS366 CRQ	4		4	
RS366 PND	5		5	
RS366 DLO	6		22	
RS366 NB1	7		14	
RS366 NB2	8		15	
RS366 NB4	9		16	
RS366 NB8	10		17	
RS366 DSC	20		13	
RS366 PWI	20		6	
RS366 GND	1		7	

Cable specification, *continued..*

Applies to Cisco TelePresence MXP and TANDBERG Classic Endpoints that supports External Network

External Network RS-530 Cable

Connector at the Tandberg end:

- Female 26pin High Density DSUB Newark P/N 50F2055 or Equivalent

Connector on RS-530:

- DSUB 25 pin Male

Cable length:

- 1 meter

Pin-Out on RS-530 Cable

Signal Name	*Female 26 pin DSUB (Tandberg End) Pin Number*	*Male 25 pin DSUB RS-530 (DCE End) Pin Number*	*Comments*
Frame Ground	1	1	Do not connect shield to FGND
Signal Ground	19	7	
Send Data (A)	11	2	Twisted pair
Send Data (B)	12	14	
Send Timing (A)	17	15	Twisted pair
Send Timing (B)	18	12	
Receive Data (A)	13	3	Twisted pair
Receive Data (B)	14	16	
Receive Timing (A)	15	17	Twisted pair
Receive Timing (B)	16	9	
Terminal Ready (A)	20	20	
Terminal Ready (B)	21	23	
Receiver Ready (A)	22	8	Twisted pair
Receiver Ready (B)	23	10	
LOS A	25	18	LOS A Unbalanced

Cable specification, *continued..*

Applies to Cisco TelePresence MXP and TANDBERG Classic Endpoints that supports External Network

External Network RS-530/RS-366 Cable

Connector at the Tandberg end:

- Female 26pin High Density DSUB Newark P/N 50F2055 or Equivalent

Connector on RS-530:

- DSUB 25 pin Male

Connector on RS-366:

- DSUB 25 pin Male

Cable length:

- 1 meter

Pin-Out on RS-530 Cable and RS-366 Cable

Signal Name	*Female 26 pin DSUB (Tandberg End) Pin Number*	*Male 25 pin DSUB RS530 (DCE End) Pin Number*	*Male 25 pin DSUB RS-366 Pin Number*	*Comments*
Frame Ground	1	1		Do not connect shield to FGND
Signal Ground	19	7		
Send Data (A)	11	2		Twisted pair
Send Data (B)	12	14		
Send Timing (A)	17	15		Twisted pair
Send Timing (B)	18	12		
Receive Data (A)	13	3		Twisted pair
Receive Data (B)	14	16		
Receive Timing (A)	15	17		Twisted pair
Receive Timing (B)	16	9		
Terminal Ready (A)	20	20		
Terminal Ready (B)	21	23		
Receiver Ready (A)	22	8		Twisted pair
Receiver Ready (B)	23	10		
LOS A	25	18		LOS A Unbalanced
RS366 DPR	2		2	
RS366 ACR	3		3	
RS366 CRQ	4		4	
RS366 PND	5		5	
RS366 DLO	6		22	
RS366 NB1	7		14	
RS366 NB2	8		15	
RS366 NB4	9		16	
RS366 NB8	10		17	
RS366 GND	1		7	

Cable specification, *continued..*

Applies to Cisco TelePresence MXP and TANDBERG Classic Endpoints that supports External Network

External Network RS-449 Cable to KIV-7

Connector at the Tandberg end:

- Female 26pin High Density DSUB Newark P/N 50F2055 or Equivalent

Connector on RS-449:

- DSUB 37 pin Male

Pin-Out on RS-449 Cable to KIV-7

Signal Name	*Female 26 pin DSUB (Tandberg End) Pin Number*	*Male 37 pin DSUB (DCE End) Pin Number*	*Comments*
Frame Ground	1	1	Do not connect shield to FGND
Send Data (A)	11	4	Twisted pair
Send Data (B)	12	14	
Send Timing (A)	17	15	Twisted pair
Send Timing (B)	18	12	
Receive Data (A)	13	3	Twisted pair
Receive Data (B)	14	16	
Receive Timing (A)	15	17	Twisted pair
Receive Timing (B)	16	9	
LOS	25	31	
Signal Ground	19	1	
		4, 20, 28	Jumpers
		19, 23, 27	Jumpers

PrecisionHD camera

Multiple Camera support

The system is able to control a total of 4 cameras.

See the Cisco Video Switch User Guide for information about multiple camera configurations.

The Video Swtcch is a rack-mountable hardware option for Ciso TelePresence MXP Series codecs (6000 MXP and 3000 MXP). The Video Switch delivers the ability to daisy chain multiple HD cameras and provides support for third party HD cameras. Supports up to six HD camera inputs. Allows the DVI input on the codec to be reserved for PC presentations.

Use the Enclosed Camera Cables

Please note that the enclosed Camera Cables must be used!

Do not use other camera cables as this might cause problems with the transfer of video signals from the PrecisionHD Camera.

HD Video Out, HDMI, Connector

The HD Video Out, HDMI, connector is disabled when connected to a Cisco system using the Cisco Camera Cable. This output does not support HDCP (High Bandwidth Digital Content Protection).

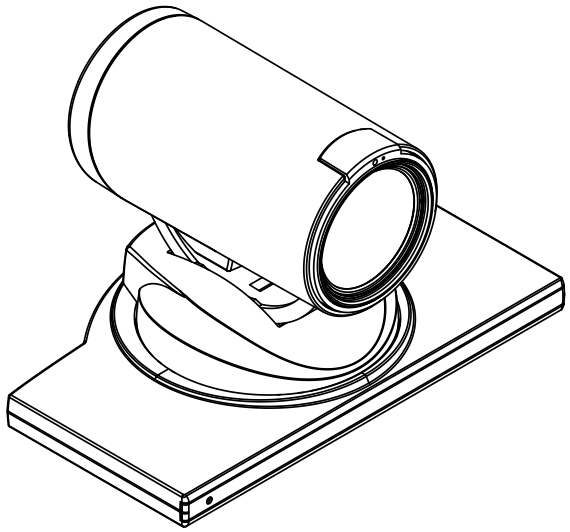

Cico TelePresence PrecisionHD 720p Camera

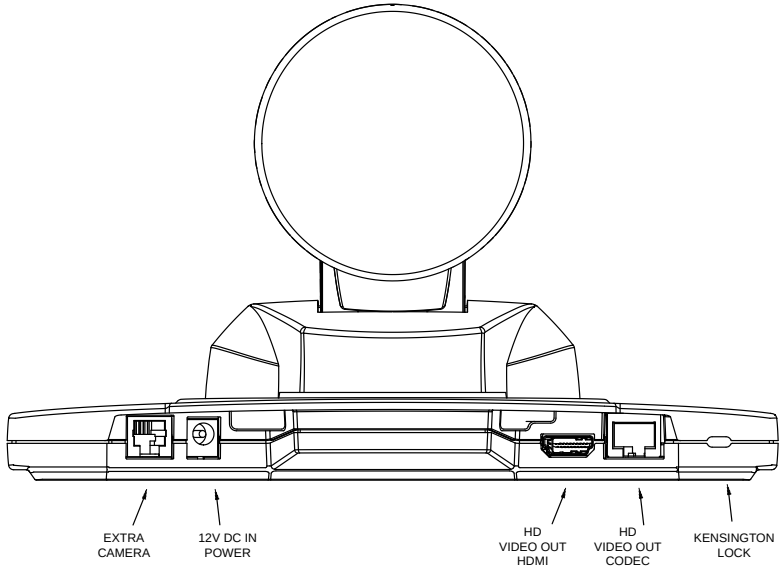

Extra Camera Pin-Out on 6 pin RJ (modular jack)	
Signal Name	*Pin Number*
GND	6
GND	5
RXD (in)	4
TXD (out)	3
Presence (12 V in daisy chain)	2
GND	1

This connector is used when cascading cameras: Control (out) signal and external camera detection. NOTE: It does not provide power for cascaded camera.

HD Video Out Codec Pin-Out on 8 pin RJ (shielded modular jack)	
Signal Name	*Pin Number*
+12V (presence 2.8mA current source when connected in daisy chain)	8
GND	7
TXD (out)	6
Video LVDS -	5
Video LVDS +	4
RXD (in)	3
GND	2
+12 V	1

This connector is used for the power, video and control signals to the main camera.

Document camera

A document camera can be used for showing text, diagrams and a variety of graphical material as well as small three-dimensional objects.

How to use a document camera with your system:

1. Connect the document camera to the Doc Cam video input, if available, on the system. This requires a system with an additional video input.
2. Open the Presentation menu from the Menu and choose Doc Cam.
3. You can also program the Presentation key on the remote to activate the document camera.

If you want to use S-Video from the document camera, you can connect the document camera to the AUX input on the system.

NOTE! This requires a system with an additional video input.

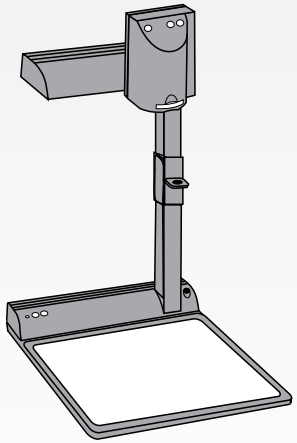

Remote Controls Key Map

The Remote controls (TRC3, TRC4 and Tracker) transmit IR-signals using the following parameters:

IR Signal Parametres	
Name	*Description*
Protocol	Siemens SDA2208
Reference frequency	485 kHz
Address	4 & 7
IR wavelength	940 nm
IR carrier frequency	30 kHz

Remote Control TRC3:

Remote Control TRC4:

Tracker:

Codes		TRC3		TRC4	
Dec	*Hex*	*Address*	*Button Name*	*Address*	*Button Name*
0	0				
1	1	0	Number 1	0	Number 1
2	2	0	Number 2	0	Number 2
3	3	0	Number 3	0	Number 3
4	4	0	Number 4	0	Number 4
5	5	0	Number 5	0	Number 5
6	6	0	Number 6	0	Number 6
7	7	0	Number 7	0	Number 7
8	8	0	Number 8	0	Number 8
9	9	0	Number 9	0	Number 9
10	0A	0	Number 0	0	Number 0
11	0B	0	*	0	*
12	0C	0	#	0	#
13	0D				
14	0E				
15	0F				
16	10				
17	11		PRESENTER		PRESENTER
18	12	0		0	
19	13				
20	14				
21	15				
22	16	0	ZOOM OUT	0	ZOOM OUT
23	17	0	ZOOM IN	0	ZOOM IN
24	18				
25	19	0	VOLUME DWN	0	VOLUME DWN
26	1A	0	VOLUME UP	0	VOLUME UP
27	1B	0	MIC OFF	0	MIC OFF
28	1C				
29	1D	0	UP	0	UP
30	1E	0	DOWN	0	DOWN
31	1F	0	LEFT	0	LEFT
32	20	0	RIGHT	0	RIGHT

Codes		TRC3		TRC4		Tracker	
Dec	*Hex*	*Address*	*Button Name*	*Address*	*Button Name*	*Address*	*Button Name*
33	21	0	OK	0	OK		
34	22	0	CALL	0	CALL		
35	23	0	END CALL	0	END CALL		
36	24	0	PHONE BOOK	0	PHONE BOOK		
37	25	0	MENU	0	MENU		
38	26	0	CANCEL	0	CANCEL		
39	27						
40	28	0	LAYOUT	0	LAUOUT		
41	29						
42	2A			0	MAIN CAM		
43	2B			0	PC		
44	2C			0	DOC CAM		
45	2D			0	DVD		
46	2E			0	AUX		
47	2F			0	HELP	4	P0
48	30			0	FAR END	4	P1
49	31			0	PRESETS	4	P2
50	32			0	SERVICES	4	P3
51	33					4	P4
52	34					4	P5
53	35					4	P6
54	36					4	P7
55	37					4	P8
56	38					4	P9
57	39					4	P10
58	3A					4	P11
59	3B					4	P12
60	3C					4	P13
61	3D					4	P14
62	3E						
63	3F	0	WAKE UP	0	WAKE UP		
25	19	3	LOW BATTERY	3	LOW BATTERY		
XX		3	PROG VER	3	PROG VER		

DVD/VCR Recording and Playback

DVD/VCR Recording

When recording a conference in stereo, the VCR will record the video as it appears on the main monitor, the local audio and the remote audio.

The VCR will record the conference in stereo if stereo audio is used in the conference.

Recording a video conference

- Connect a cable between Video Out 2 on the video system and Video In on the VCR.
- Connect a cable between Audio Out 2 on the video system and Audio In on the VCR.

Stereo recording

- Connect a video cable between Video Out 2 on the video system to Video In on the VCR
- Connect an audio cable between Audio Out 2 (VCR L) on the video system to VCR/DVD Audio In (L)
- Connect an audio cable between Audio Out 3 (VCR R) on the video system to VCR/DVD Audio In (R)

Configurations

Make sure the following configurations are done:

- Stereo I/O Mode is set to On
- 128 AAC-LD is enabled
- AAC-LD is enabled
- To enable VCR/DVD ducking (reduce volume when speaking), check that VCR Ducking under Audio Settings is set to On.

When recording the VCR will record the video as it appears on the main monitor, the local audio and the audio from the far end.

A system with one video output and one mixed (local and far end) audio output is required for recording.

DVD/VCR Playback, Mono

For playback

- Connect a cable between Video Out on the VCR and Video In (VCR) on the video system.
- Connect a cable between Audio Out on the VCR and the Audio In (VCR) on the system.
- Choose VCR from the Presentation menu in the Menu to activate the VCR input.

Configurations

- Make sure that Audio In (VCR) is On. See the Control Panel > Audio menu.
- If audio from VCR is too low, this level can be adjusted in Audio Settings, Inputs and Level Settings. See the Control Panel > Audio menu.
- To enable VCR/DVD ducking (reduce volume when speaking), check that VCR Ducking is set to On. See the Control Panel > Audio menu.

The audio from the VCR will be audible in the local speaker system.

The audio from the VCR and your microphone(s) will be mixed and sent to the far end.

When a person talks on either local or far end, the VCR audio level can be reduced to make it easier to comment on a video recording.

For playback, a system with one video input and one audio input without integrated echo cancellation is required.

Additional Microphones

If your environment is such that you require more than one microphone for your room, e.g. you have a whiteboard at a distance from your table microphone, it is possible to connect additional microphones to your system.

NOTE! Additional microphones require a system with more than one XLR input.

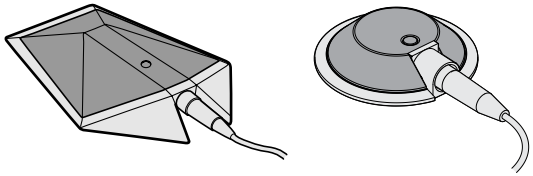

Voice Activated Camera Tracking

When more than one microphone is connected, you have the option to use the Voice Activated Camera Positioning feature.

Through Camera Tracking and the use of two or three microphones, the camera can automatically position itself on the current speaker.

Before using camera tracking, the camera positions used must be stored at Preset 7 (Mic1), Preset 8 (Mic2) and/or Preset 9 (Mic3).

Audio Science Microphone

The Cisco TelePresence Audio Science microphone is a ceiling-mounted, wide coverage, boundary microphone, which can eliminate the need for table microphones.

User documentation is found here: http://www.cisco.com/en/US/partner/products/ps11387/prod_installation_guides_list.html.

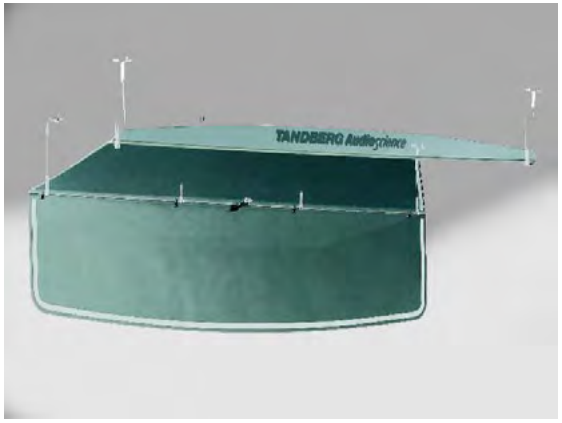

Audio Crown PZM-6D

Audio Technica AT-861PZ

Telephone Add-On

The video system has a built in audio bridge* that can bring in Voice over IP (VoIP) telephony or normal telephone sites using ISDN.

A built in audio bridge is an audio MCU (Multipoint Conference Unit).

Note that this requires a system with mixed audio output (audio from local and far end) and one audio input without integrated echo cancelling.

In addition to using ISDN and IP for your telephone sites, it is possible to connect a telephone using normal POTS line** by:

Connect the audio out from the conference telephone to the AUX input.

Connect the audio input from the conference telephone to the AUX output, which provides a mixed signal between local and far end.

* Optional MultiSite package available

** Require a conference phone with external audio input and output

Security

Access Code

When Access Code is enabled, the user will be asked to enter an access code before he/she can make a call. The system will verify if the entered access code is valid by checking the code with the allowed codes listed in the access.txt file on the ftp-server in the system. If no access.txt file is uploaded, registration of the code will be done without validation. Read more about Access Codes in Call Control with Access Codes.

Administrator Password

Access to the Control Panel menus on the video system can be controlled by using password protection. An Administrator Password can be set in Menu Settings, in Security or from the dataport: `menupassword set <pin-code>`. The pin-code should be maximum 5 - five digits. To erase the password, enter an empty pin-code.

Codec Password

To set or change the password that controls the access to the codec, you need to log into the Command Line Interface. Type `xConfiguration SystemUnit Password: <S: 0, 16>`, where <S: 0,16> is a password with zero to 16 characters.

Streaming password

By setting a streaming password in the streaming menu on the system, a password has to be entered on the streaming client to be able to see the video stream from the system.

IP Password

By setting an IP Access Password on the system, all access to the system using IP (Telnet, FTP and WEB) requires a password. This password can be enabled from telnet or dataport using the command: `ippassword <ip-password>`. The default IP user name and password is "TANDBERG". To remove this password, use the command: "`ippassword `". From telnet, this is only possible by first entering the correct password.

IP Services

The different IP services on the system - FTP, Telnet, Telnet Challenge, HTTP, HTTPS, SNMP, SSH, H.323 and SIP can be disabled to prevent access to the system. By using the commands below, the services can be independently enabled/disabled:

```
xconfiguration Telnet/TelnetChallenge/FTP/HTTP/HTTPS/
SSH/H323 Mode: <On/Off>
```

```
xconfiguration TelnetChallenge Mode: <On/Off> [port]
```

```
xconfiguration SNMP Mode: <On/Off/ReadOnly/
TrapsOnly>
```

SNMP Security alert

This function will notify any Management Application (such as TMS - Cisco TelePresence Management Suite) if anyone tries to perform Remote Management on the system using an illegal password.

The Security alert that is sent to the Management Application will contain information about the IP address and the service (WEB, Telnet, FTP) being used for the attempt. If TMS is used, email notifications or alarms about the attempt can be sent to specified persons.

Encryption

All Cisco systems support both AES and DES encryption. By default this feature is enabled such that when connecting with any other video system or MCU, a Cisco system will attempt to establish a secure conference using AES or DES encryption. The Cisco system will attempt this for both IP and ISDN connections. Where a remote system or MCU supports encryption, the highest common encryption algorithm will be selected on a port-by-port basis.

The type and status of the encryption negotiated is indicated by padlock symbols and on-screen messages. Encryption on the Cisco systems is fully automatic, and provides clear security status indicators;

- An open padlock indicates that encryption is being initialized, but the conference is not yet encrypted.
- Single padlock indicates DES encryption.
- Double padlock indicates AES encryption.

In addition to on-screen indicators the Call Status menu provides two information fields regarding call encryption. The first field is the Encryption Code, which will identify either AES or DES. The second field is the Encryption Check Code and is comprised of an alphanumeric string. This string will be the same for systems on either side of an encrypted conference. If the Check Codes do not match, this would indicate that the call has been exposed to a "Man In The Middle" attack.

When a system with MultiSite functionality hosts a conference, the highest possible encryption algorithm will be negotiated on a site-by-site basis. MultiSite conferences can therefore support a mix of AES and DES encrypted endpoints in the same conference. A conference will be as secure as its weakest link.

All systems supporting DES encryption can upgrade to AES encryption. Please contact your Cisco representative for more information.

The standards supporting the encryption mechanisms are: AES, DES, H.233, H234 and H.235 (H235v3 & v2 for backwards compatibility) with extended Diffie Hellman key distribution via H.320, H.323 and Leased Line connections.

The AES implementation is validated as conforming to the Advanced Encryption Standard (AES) Algorithm, as specified in Federal Information Processing Standard Publication 197, Advanced Encryption Standard, by The National Institute of Standards and Technology (NIST).

IEEE 802.1x /EAP (Extensible Authentication Protocol)

This is a standard for authentication and authorization of units/systems onto the network.

Static configuration

- System ID and Password
- Anonymous ID for encryption challenge
- Enable methods

Supported methods

- MD5 (simple challenge)
- PEAP (encrypted channel)
- TTLS

Note that 802.1x wireless LAN is not supported.

The Web Interface

You can easily access and maintain the video system remotely via a local area network (LAN) using a standard Web-browser.

NOTE! The access to the web interface may be password protected by the IP Access Password.

Open the web interface

1. In the address field type the IP-address of your video system.
2. If the video system is setup with an IP Access Password you must enter the password:
   - Password (IP Access Password). The default IP Access Password is TANDBERG.
   - and the Web-page from the system will be shown.

The example below shows the System Configuration > H.323 Configuration page.

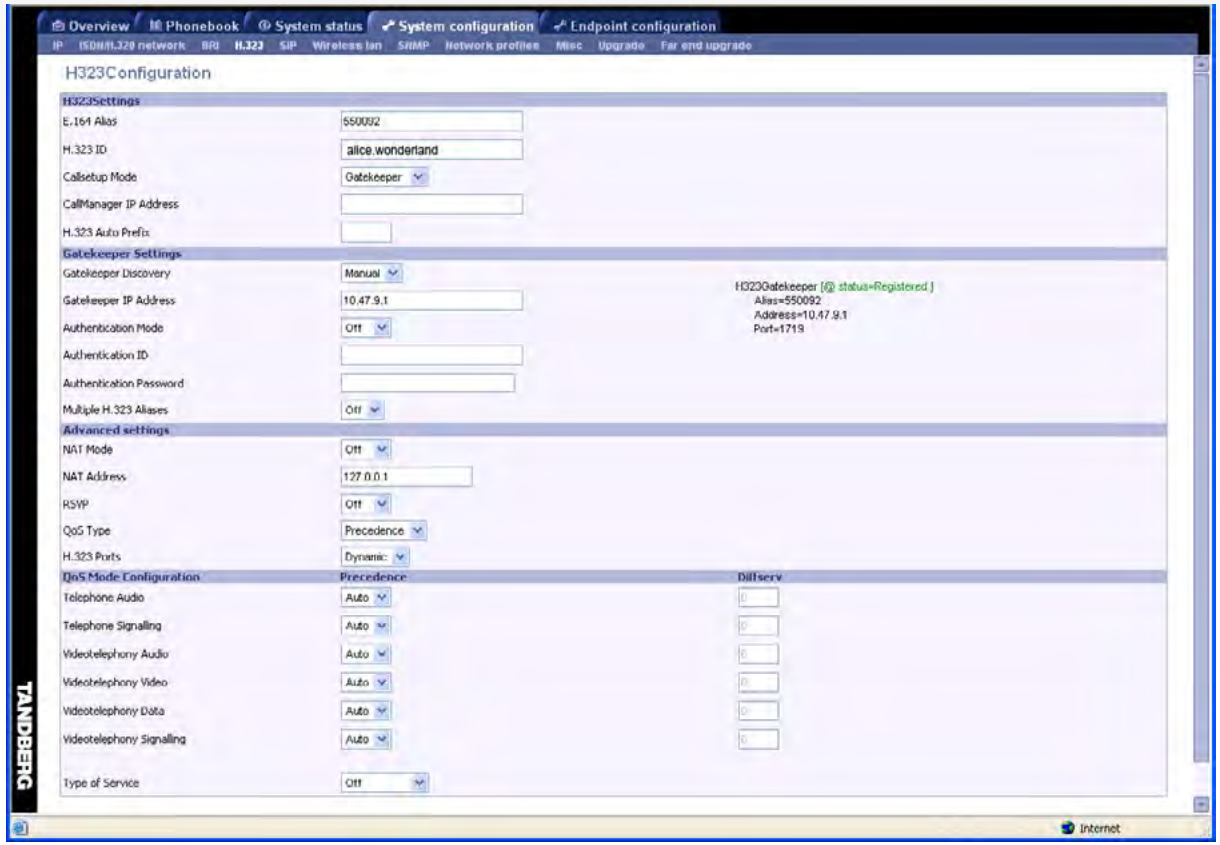

System upgrade

Using the web interface

The TANDBERG MXP systems can be software upgraded in three different ways:

- Using Web Interface
- Using FTP
- Using ISDN

Software File

Before starting the software upgrade of the TANDBERG MXP system, please make sure to have the new Software File, (for instance s050000F30.pkg).

Your TANDBERG Partner will provide this for you.

Release Key

Before starting the software upgrade of the TANDBERG MXP system, please make sure to have the Release Key for this software available.

Your TANDBERG Partner will provide this for you.

Backup

All options and settings will automatically be stored when upgrading, so no backup is necessary.

What happens If the upgrade is interrupted

If the system upgrade process is aborted before it's complete, the system will work as normal with the original software.

The system upgrade procedure

To upgrade using the web interface, please do the following steps

1. Type the IP address of the TANDBERG MXP system that shall be upgraded (for instance 10.0.8.77) in a standard browser, such as Internet Explorer 6.0.
2. The web interface of the codec will then be displayed. Select the 'System Configuration' tab on top of the page, and then the sub-tab 'Upgrade'.
3. Enter the Release key in the 'Release Key' field and press the 'Install Software' button.
4. Type in the path to where the new software file is stored, or select the file by using the 'Browse' button.
5. The progress for the sw upgrade can be tracked by pressing the 'telnet' link in the help text box BEFORE pressing the install button. Please note that this is not a necessary action for a successful software upgrade. An indication of the software upgrade progress will also be shown on the display of the system
6. Press the 'Install' button to start the software upgrade.
7. When the software upgrade is complete, you need to click on the restart button and press OK to restart the system in order to activate the new software. Once verified, the system will reboot once more to complete the upload of all systems parameters kept from the old software revision.
8. To verify that the new sw is installed, refresh the page shown in figure1 after restart. The 'Software Version' should now show the new software version uploaded to the system. The same information can also be found in the menu on the system under 'Control Panel/System Information'.

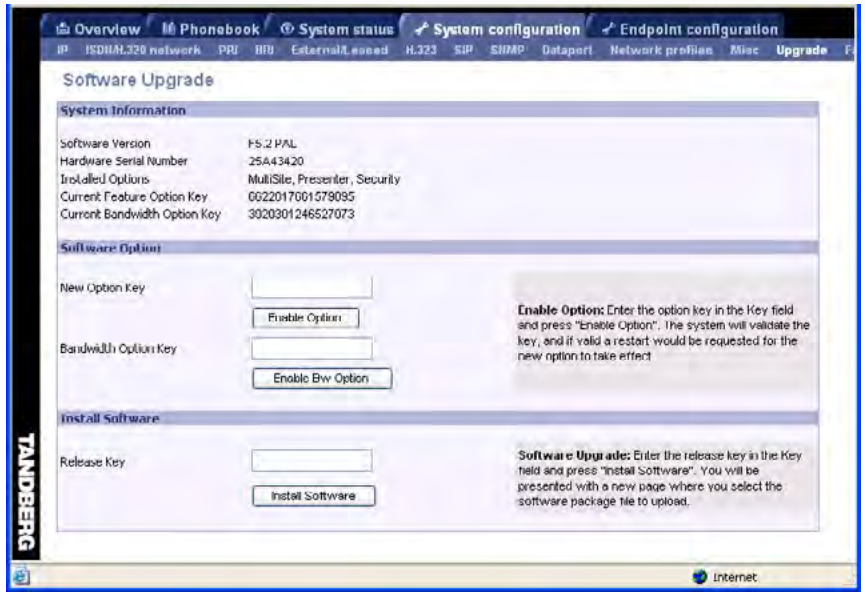

System upgrade, *continued..*

Using FTP

The TANDBERG MXP systems can be software upgraded in three different ways:

- Using Web Interface
- Using FTP
- Using ISDN

Software File

Before starting the software upgrade of the TANDBERG MXP system, please make sure to have the new Software File, (for instance s050000F30.pkg).

Your TANDBERG Partner will provide this for you.

Release Key

Before starting the software upgrade of the TANDBERG MXP system, please make sure to have the Release Key for this software available.

Your TANDBERG Partner will provide this for you.

Backup

All options and settings will automatically be stored when upgrading, so no backup is necessary.

What happens If the upgrade is interrupted

If the system upgrade process is aborted before it's complete, the system will work as normal with the original software.

The system upgrade procedure

To upgrade using the web interface, please do the following steps

1. Copy the new software file to a folder on your harddisk, for instance `c:\software`.
2. Open a DOS window, and go to the folder where the new software is stored.
3. Type ftp `<ip address of the TANDBERG MXP system>` for example '`ftp 10.0.8.77`'
4. Type in the supplied '`Release Key`' as provided from your TANDBERG Partner.
5. Type in your IP password (default is "`TANDBERG`") as password.
6. Type '`put <software file name>`' and press Enter. The new software file will now be uploaded to the TANDBERG MXP system. Example: '`put s050000F30.pkg`'
7. When the software upload is complete, end the ftp connection to the TANDBERG MXP system by typing '`bye`' in the DOS prompt.
8. To exit the DOS window completely, type '`exit`'
9. Restart the video system to activate the new software.

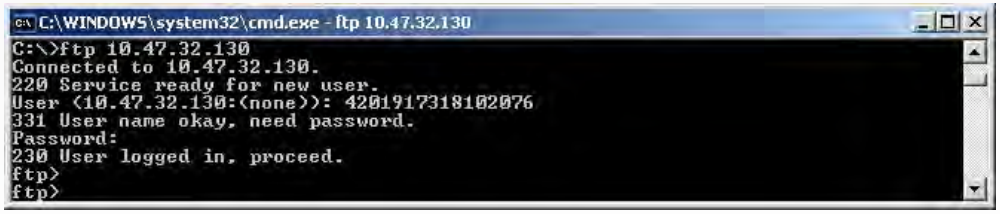

System upgrade, *continued..*

Using ISDN

The TANDBERG MXP systems can be software upgraded in three different ways:

- Using Web Interface
- Using FTP
- Using ISDN

Software File

Before starting the software upgrade of the TANDBERG MXP system, please make sure to have the new Software File, (for instance s050000F30.pkg).

Your TANDBERG Partner will provide this for you.

Release Key

Before starting the software upgrade of the TANDBERG MXP system, please make sure to have the Release Key for this software available.

Your TANDBERG Partner will provide this for you.

Backup

All options and settings will automatically be stored when upgrading, so no backup is necessary.

What happens If the upgrade is interrupted

If the system upgrade process is aborted before it's complete, the system will work as normal with the original software.

About far end ISDN system upgrade

NOTE! Far end software upgrade is only possible when in an ISDN conference with one other far end endpoint. Both systems must be on software version F3.0 or newer for this functionality.

The system upgrade procedure

To upgrade using the web interface, please do the following steps

1. Connect to the system that shall be upgraded using ISDN
2. Copy the new software file to a folder on your computer, for instance `c:\software`.
3. Type the IP address of the TANDBERG MXP system that the software upgrade is going to be done from (for instance 10.0.8.77) in a standard browser, such as Internet Explorer 6.0. The web interface of the codec will then be displayed.
4. Select the System Configuration tab on top of the page, and then the sub-tab Far end upgrade.
5. Enter the release key for the system to be upgraded in the 'Release Key' field. If no release key is given, the Far End System will use the previously stored release key if possible. This will work when upgrading from a main release to a dot release.
6. Make sure the setting "Far End System Upgrade" is set to "On" at the remote site. This setting can be found in the Settings/ General/Permissions menu.
7. Enter the password set at the far end for remote upgrade (default password is "TANDBERG")
8. Press 'Install Software' .The system will now use about 90% of the call capacity to transfer the software file across. During this time, audio and video will be turned off.
9. Once the software has been transferred and verified at the far end, you will get a new webpage with information that the upgrade of the far end was successful. At the same time, a message box will appear at the remote system asking if you want to reboot the system to activate the new software.
10. To activate the new software. The ISDN connection needs to be closed, and the TANDBERG MXP system must be rebooted. In the menu on the system under 'Control Panel/System Information', the installed software should now be displayed as the 'Software Version'.

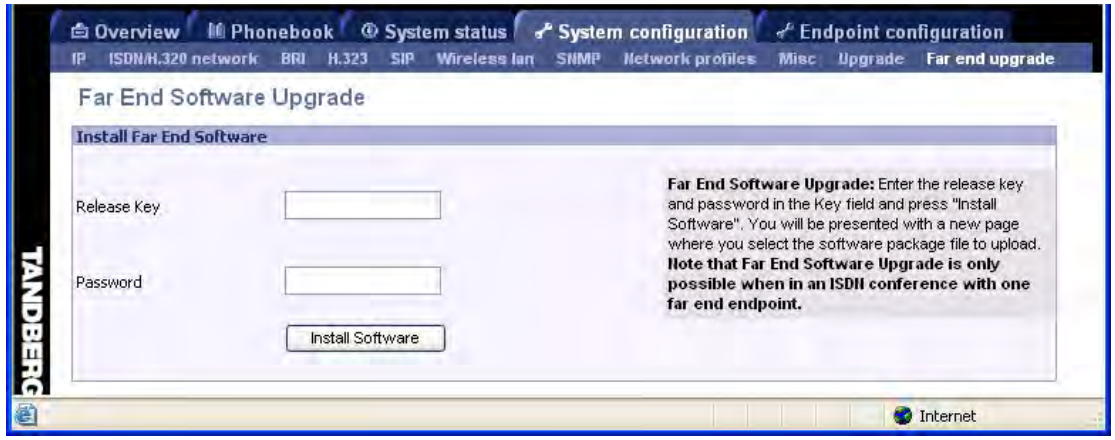

Diagnostics Tools for IP

Using Diagnostic Tools for IP (H.323)

Using the Diagnostics Tools for IP will require a PC and setting up a telnet session towards the PC and the video system.

Q.931

To show Q.931 trace during a call you need to issue the command '`syslog on`'. One can get traces for RAS, Q.931 and H.245 with this command. It is a complex trace and requires an extensive knowledge in H.323 signaling to be understood.

Ping

Ping is used to see if the system is able to reach a specific IP-address, using a mechanism in IP called ICMP. If the system is unable to register to its Gatekeeper, or if it is unable to dial a specific endpoint, one can use ping to see if there is at least an IP-route to the Gatekeeper or to the endpoint. In case you have problems, one would first ping the default gateway, then the Gatekeeper, and then the other endpoint.

Traceroute

Traceroute does exactly that; it traces the route an IP-packet takes to reach its destination and displays all router hops. Traceroute is very useful for seeing exactly where there is a routing-problem in the IP-network, and for checking where transport-delay is introduced.

Layer 4 Ports used in H.323 calls

The layer 4 ports used by the system in a H.323 call can be defined as follows:

- Dynamic: The ports are allocated at random from 2048 to 65535.
- Dynamic H323 ports are allocated at random from 11000 to 65535.
- Static: Will use the predefined layer 4 ports listed in the tables to the right.

More Commands to be found...

The diagnostics commands are explained in the TANDBERG MXP System Integrators Guide.

Go to: http://www.tandberg.com/docs and see the Application Programmer Interface section.

Point-to-Point + DuoVideo		
Function	*Port*	*Type*
Gatekeeper Discovery (RAS)	1719	UDP
Q.931 Call Setup	1720	TCP
H.245	Range 5555-5574	TCP
Video	Range 2326-2385	UDP
Audio	Range 2326-2385	UDP
Data/FECC	Range 2326-2385	UDP

MultiSite + DuoVideo		
Function	*Port*	*Type*
Gatekeeper Discovery (RAS)	1719	UDP
Q.931 Call Setup	1720	TCP
H.245*	Range 5555-5574	TCP
Video	Range 2326-2485	UDP
Audio	Range 2326-2485	UDP
Data/FECC	Range 2326-2485	UDP

* While using MultiSite, if a site is disconnected and reconnected without terminating the entire conference, the next site to be connected will have a H.245 port outside of the specified range. If this functionality is required through a firewall, the range of TCP ports can be extended past 5564. However, if a site is disconnected and reconnected, without ending the conference enough times one can quickly end up outside of this range again.

Monitors

Power Management Systems

VESA Display Power Management

Because of the tremendous amount of energy consumed by monitors when operating, the system will reduce power consumption and extend monitor lifecycle by suspending the (switch off) monitors and projectors when the system goes into sleep/standby.

This applies for all VESA Display Power Management compliant displays that are connected to the VGA/DVI output of the system.

The display device needs to comply with VESA Display Power Management System (DPMS).

NOTE This requires a system supplied with a VGA/DVI output.

VESA DPMS Standard

The VESA DPMS standard consists of 4 modes, Normal, Standby, Suspend and Off, and applies to all Sync formats (e.g. VGA).

DPMS Standard

	Normal	*Standby*	*Suspend*	*Off*
Horisontal Sync	On	Off	On	Off
Vertical Sync	On	On	Off	Off
Power Savings	None	Minimal	Substantial	Maximum
Recovery Time	None	2-3 seconds	2-3 seconds	8-10 seconds

In Off mode some power may still be drawn in order to power indicator lights etc. EDID contains the information on which mode a specific monitor supports.

All four models are supported. However, in software version F1 and above, all monitors not listed below are automatically set to Off.

Monitor vs DPMS Mode

Monitor	*DPMS Mode*
Dell	Off

VESA - Video Electronic Standards Association
DPMS - Display Power Management System
EDID - Extended Display Identification Data
DMPM - Digital Monitor Power Management

Digital Monitor Power Management

DMPM - Digital Monitor Power Management is monitor power management applied over the digital DVI interface. DMPM is supported in software version F2 and above.

The following monitor power states are defined:

Monitor On Power state

Transmitter (Cisco codec) and receiver (Monitor) are powered and active. This power state is equivalent with the DPMS normal mode.

Intermediate Power state

When the codec goes from active to standby, it turns off the DVI transmitter and the monitor can go from Monitor On

Active-off Power state

The monitor can go from Intermediate Power state to Active-off Power state when the monitor timer expires.

Non-Link Recoverable Off Power State

The monitor can enter Non-Link Recoverable Off Power State when the codec is switched off or if the DVI cable is disconnected. This power state is equivalent to the DPMS “Off (with no DPMS recovery)” state.

Monitor Power Switch Off Power state

This state can be entered when the power switch on the monitor is toggled to its off position. This state has two sub-states dependent on if the codec is switched on or off.

Monitors, *continued..*

After Image Lagging

CAUTION! Avoid displaying the same images continuously over a long period of time on the monitors.

Displaying the same images such as still images for a long time may cause after-image lagging. This may occur in the cases described here.

After image lagging due to remaining electrical load

When image patterns with very high peak luminance are displayed for more than 1 minute, after-image lagging may occur due to the remaining electric load. The after-images remaining on the screen will disappear when moving images are displayed. The time for the after-images to disappear depends on the luminance of the still images and the time they had been displayed.

After-image lagging due to sticking

When images of the same pattern are displayed continuously for several hours or displayed for a short period of time every day, after-images may remain on the screen due to the sticking of the fluorescent materials. In this case, these images may decrease if moving images are displayed after them, but basically they will not disappear.

Solving after-image lagging problems

If you have got after-image lagging on your monitors, you can reduce the problem to an acceptable level by displaying a white image on the monitors for a few hours. This can be accomplished by focusing the camera towards a white paper and setting maximum brightness. See the 'User Manual' for details.

NOTE: Warranty may be invalidated if the precautions listed above are not followed.

Monitors, *continued..*

Extended Display Identification Data (EDID)

Extended Display Identification Data (EDID) is a VESA standard data format that will allow the system to communicate its capabilities, including vendor information like the supported VGA-formats and frequency range limits to a PC connected to the XGA/DVI input.

NOTE! This requires a system supplied with a XGA/DVI input.

This means that the PC always* will be able to output a valid VGA/DVI signal to the system with no manual reconfiguration of the PC screen settings.

The EDID structure v1.3 is supported, which adheres to the Microsoft Plug & Play definition.

This standard contains information on product ID, basic display parameters, timing identifications and detailed timing descriptions.

For TANDBERG video systems with software version F1 and above, TANDBERG will use the EDID information to decide which resolution to use, 800x600 @ 75Hz or 1024x768 @ 60Hz.

* Need to comply with the VESA EDID Standard.

Listed below are some of the monitors we have tested and verified against:

Tested and Verified Monitors	
EDID & Timing	
ADI A715	LG L3200A
Dell W1700	LG M3200C
Dell W1900	LG M3201C
EIZO L367	Löewe TAA112747
EIZO F730	MAG D700
ErgoScan 400S	MAG DJ707
Hitachi CM640ET	Panasonic SL75
FourSeason	Pioneer PDP-50MXE10
Hitachi CM769ET	Pioneer PDP-42MXE10-S
IBM 9494-HBO	Pioneer PDP-43MXE1-S
IBM G97	Pioneer PDP-50MXE11
IBM E74	Pioneer PDP-50MXE1-S
IBM 6743-60N	Pioneer PDP-50MXE20-S
JVC LT-23X475	Samsung 191T
JVC LT-23C50BU	Samsung 323T
JVC LT-23X576	

Listed below are results of an example using 1024x768@60Hz:

Example (1024x768@60Hz)	
Detailed timing description	*Value*
PixelClockDiv10000:	6500
Horizontal Active:	1024
Horizontal Blanking:	320
Vertical Active:	768
Vertical Blanking:	38
Horizontal Sync Offset:	24
Horizontal Sync Pulse Width:	136
Vertical Sync Offset:	3
Vertical Sync Pulse Width:	6
Horizontal Image Size:	Not available
Vertical Image Size:	Not available
Horizontal Border:	0
Vertical Border:	0

Monitors, *continued..*

Dual Monitor, XGA Monitors and Projectors

Systems with dual monitor video outputs can be used with dual monitors:

- Cisco TelePresence Codec 6000 MXP
- Cisco TelePresence Codec 3000 MXP

Dual monitor

The dual monitor configuration requires a system with dual monitor video output.

Control Panel Settings

The Dual Monitor setting must be set to On. Go to: General > Screen Settings > Dual Monitor.

The set-top systems (770/880/990 MXP) comes with dual monitor capability.

XGA Monitors and Projectors

Some Cisco systems can be delivered with optional single or dual TV/XGA monitors.

It can also be connected to any DVI/VGA/PAL or NTSC display.

NOTE! This requires a system with minimum one DVI-I output.

Control Panel Settings

To enable dual TV/XGA monitors, see the Video Out Settings. Go to: Control Panel > General Settings > Screen Settings > Video Out.

E1/T1 Networks - NSF Service Codes

AT&T offers several digital switched services. These include SDN with service code 1 and ACCUNET with service code 6.

To the right you will find a list of common service profiles. As these profiles may change, contact your service provider to get the correct profile.

AT&T Service Code (Ref.1)

Code	*Service*
0	Disable *
1	SDN (including GSDN)
2	Toll Free Megacom (800)
3	Megacom
6	ACCUNET Switched Digital Service (incl. Switched Digital International)
7	Long Distance Service (incl. AT&T World Connect)
8	International Toll Free Service (1800)
16	AT&T MultiQuest
23	Call Redirection Service

Sprint Service Code (Ref.2)

Code	*Service*
0	Reserved
1	Private
2	Inwatts
3	Outwatts
4	FX
5	TieTrunk

MCI Service Code (Ref.2)

Code	*Service*
1	VNET / Vision
2	800
3	PRISM1, PRISMII, WATS
4	900
5	DAL

* “0” will still send NSF in the Q931 setup, which may cause calls to fail. Set to mode “off” if not needed.

Ref. 1: AT&T TR 41459 Specification, June 1999, page 76

Ref. 2: Ascend Multiband Plus-T1/PRI, User Documentation, Page 6-8

About FIPS Mode

When FIPS mode is enabled, the video system will operate according to NIST FIPS 140-2 Level 1 requirements. This means that only services and cryptographic algorithms that are accepted according to this standard will be used. Options and menu items which is not approved will be grayed out and/or not be selectable in the menus.

Certificate management

NIST issues certificates to products that has been verified and tested to comply with this standard, as of this writing TANDBERG is in the process of obtaining such a certificate.

- FIPS - Federal Information Processing Standards.
- NIST - National Institute of Standards and Technology, the issuer of validation certificates.
- Certificate - Text file which indicates a trusted third party (issuer or CA) verifying the authenticity of the unit (in this context).
- CA - Certificate authority, issuer of (root) certificates.

How to activate FIPS Mode

1. Enter the Security Settings menu and set the FIPS mode to On.
2. A warning box will appear:
   `"You are about to activate FIPS mode. The system will be restarted when saving this page."`
   - Press the Cancel button to leave without any changes.
   - Press the Save and Restart button for the changes to take effect.

How to deactivate FIPS Mode

3. Enter the Security Settings menu and set the FIPS mode to Off.
4. A warning box will appear:
   `"You are about to deactivate FIPS mode. The system will be restarted when saving this page."`
   - Press the Cancel button to leave without any changes.
   - Press the OK button to proceed and press the Save and Restart button for the changes to take effect.

Menus disabled in FIPS mode

- Main Menu > Presentation > VNC
- Control Panel > Diagnostics > View Administrator Settings > Video quality > VNC
- Control Panel > Diagnostics > View Administrator Settings > Video name > VNC
- Control Panel > General > Permissions > Far End ISDN System Upgrade
- Control Panel > Call Quality > Video quality > VNC
- Control Panel > Security > Encryption Mode > DES
- Control Panel > Security > VNC Password
- Control Panel > Presentation Settings > Call Video Source > VNC
- Control Panel > Presentation Settings > Presentation Source > VNC
- Control Panel > Presentation Settings > Snapshot Source > VNC
- Control Panel > Video > Video Name > VNC
- Control Panel > Security > Streaming Password
- Control Panel > Menu Settings > Icons > Encryption (possible to turn off the security icon)
- Control Panel > Network > LAN Settings > SIP Settings > Autentication
- Control Panel > Network > LAN Settings > Wireless LAN Settings (and all sub menus)
- Control Panel > Network > LAN Settings > IEEE802.1x

About FIPS Mode, cont...

When FIPS mode is enabled, the video system will operate according to NIST FIPS 140-2 Level 1 requirements. This means that only services and cryptographic algorithms that are accepted according to this standard will be used. Options and menu items which is not approved will be grayed out and/or not be selectable in the menus.

Certificate management

NIST issues certificates to products that has been verified and tested to comply with this standard, as of this writing TANDBERG is in the process of obtaining such a certificate.

Uploading HTTPS certificate for FIPS Mode

When in FIPS mode, we recommend using HTTPS for web management instead of HTTP. HTTPS in FIPS mode requires a user installed certificate to operate.

Be sure to enable FIPS mode first (using either the remote control or the dataport interface, then in a secure environment, use the HTTP protocol to install the required certificates before doing a restart to the video system. See the previous page on how to enable FIPS Mode.

To ensure the authenticity of an endpoint, it is recommended that the administrator issues/obtains and installs unique certificates to each endpoint. This is done through the Web Interface.

To install a certificate, you need:

- HTTPS certificate (.PEM format)
- Private key (.PEM format)
- Passphrase (optional)
- The IP Address of the video system (see Control Panel > Diagnostics > System Information)

The software upload procedure

NOTE! The certificate must be installed AFTER enabling FIPS mode, using HTTP (not HTTPS) access to the codec. This must be done by an administrator in a secure environment, since the installation of the certificate must occur over an unsecure link (HTTP) and sensitive files (such as the private key) are being uploaded.

1. Start a Web-browser on your PC and type in the IP-address of your video system.
2. If the video system is setup with an IP Access Password you must enter the password. The default IP Access Password is TANDBERG.
3. Go to Endpoint Configuration > Certificate Management
4. Press Browse to locate the files for the HTTPS certificate and Private Key `<.pem format>`
5. Type in the Passphrase and press Upload to upload the certificate and private key

After having uploaded the Certificate

6. After the certificate installation, it is recommended to disable HTTP and use only HTTPS. Go to Control Panel > Network > LAN Settings > IP Services to disable HTTP (set to Off) and enable HTTPS (set to On).
7. Press the Save and Restart button for the changes to take effect.

Cisco CallManager Registration

The registration of a Cisco TelePresence MXP in Cisco CallManager is supported on the CallManager (CCM) 4.0 software and forward. The TANDBERG plug in for Cisco Call Manager must be installed. This example is valid for SCCP versions of the MXP.

Configuring MXP series endpoint on Cisco CallManager 4.1

Open a web browser and enter the address to the Cisco Callmanager Administration.

Example: `https://10.47.9.17/ccmadmin/`

1) Log on to CallManager:

2) Select Device > Add New Device:

3) Select Device Type > Phone and press Next:

4) Select Phone Type > TANDBERG Video Endpoint and press Next:

5) Fill in the Phone Configuration and press Insert.

The MAC Address is found on your TANDBERG video system.

a) Go to Control Panel > Diagnostics > System Information.

b) or use Telnet and the command: `xstat //mac`

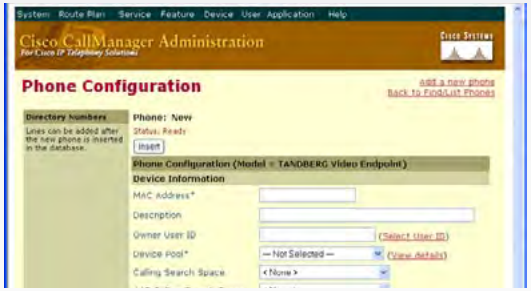

6) Fill in the Directory Number Configuration and press Add.

a) The Directory Number is the E.164 Alias and is found on your TANDBERG video system. Go to Control Panel > Network > LAN Settings > H.323 Settings > E.164 Alias.

b) In the Forward and Pickup Settings enter the time of No Answer Ring Duration. The time selected has to have a value from 1 to 300 seconds.

You have now successfully configured the Cisco CallManager with a TANDBERG MXP system!

When the TANDBERG MXP system is registered to a Cisco CallManager, it will be possible to place and receive calls from this system to any other video and voice systems that are registered on the same Cisco CallManager.

Bandwidth information

Bandwidth Information for MXP Endpoints							
Model	*Codec 6000 MXP*	*Codec 3000 MXP, 3000Net MXP*	*1700 MXP*	*1000 MXP*	*Edge 95MXP*	*Edge 75MXP*	*1000MXP*
Bandwidth Point to point ISDN / IP	Standard: 768 / 3072 Option: 1920 / 4096	Standard: 384 / 1536 Option: 512 / 1920 3000NET: 384 / 1536	Standard: 1920 (IP only) Options: 512 / 1920	Standard: 768 (IP only) Options: 128 / 768, 384 / 768	Standard: 1920 (IP only) Options: 512 / 1920, 768 / 1920	Standard: 768 (IP only) Option: 128 / 768	Standard: 768 (IP only) Options: 128 / 768, 384 / 768
MultiSite	Total: 3072kbps 4x768 video + 4 audio 3x1536 video + no audio Total: 6144kbps 6x1152 video + 5 audio 5x1536 video + no audio 4x1920 video + 5 audio 3x3072 video + no audio	Total: 1536kbps 4x512 video + no audio 4x384 video + 3 audio Total: 2304kbps 4x768 video + no audio 4x512 video + 3 audio	Total: 2304kbps 4x768 video + no audio 4x512 video + 3 audio	Not Available	Total: 2304kbps 4x768 video + no audio 4x512 video + 3 audio	Not Available	Not Available
Rate Matching	Yes	Yes	Yes	Not Available	Yes	Not Available	Not Available
Dual Stream (DuoVideo / H.239)	Yes	Yes	Yes	Yes	Yes	Yes	Yes
Secure Conference	All bandwidths	All bandwidths	All bandwidths	All bandwidths	All bandwidths	All bandwidths	All bandwidths
H.264	Up to 2 Mbps	Up to 2 Mbps	Up to 2 Mbps		Up to 2 Mbps	Up to 768 kbps	Up to 768 kbps
Picture Mode MultiSite	VS, CP4, CP5+1	VS, CP4, CP5+1	Not Available		Not Available	Not Available	Not Available

Dimensions

1700 MXP

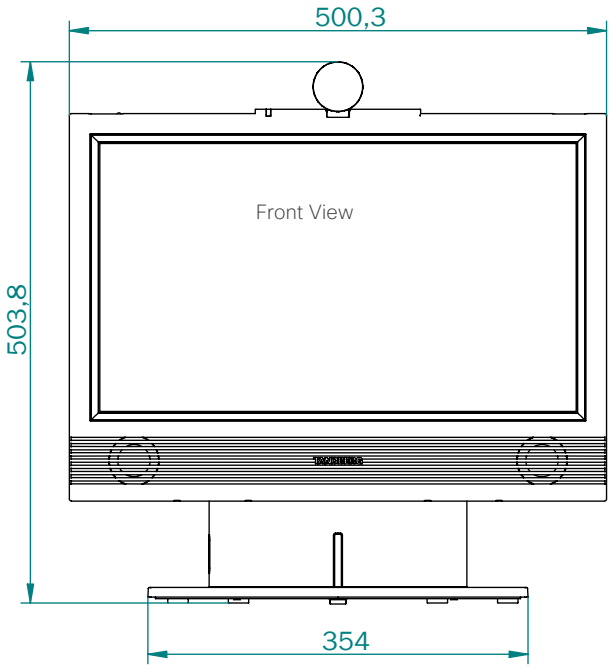

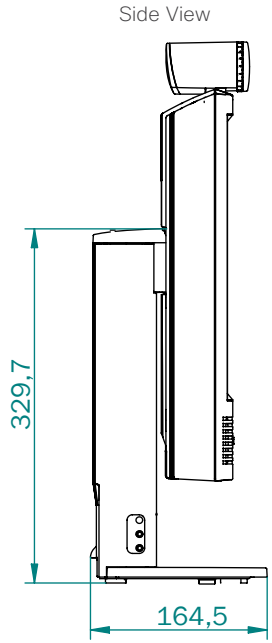

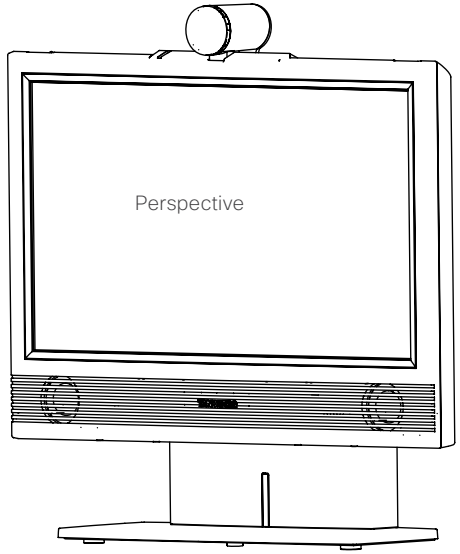

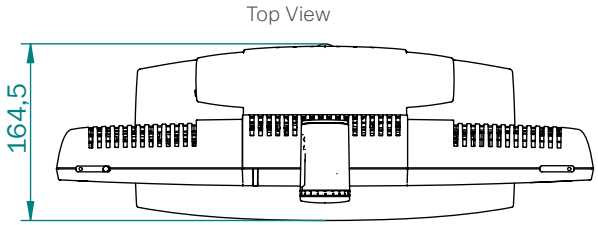

Dimensions

1000 MXP

Side View

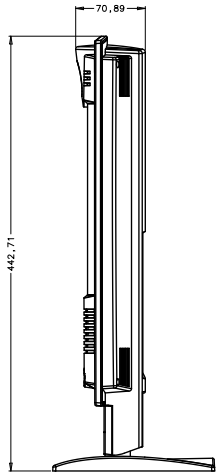

Front View

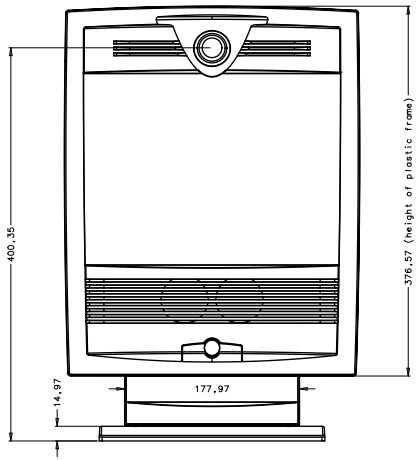

Perspective

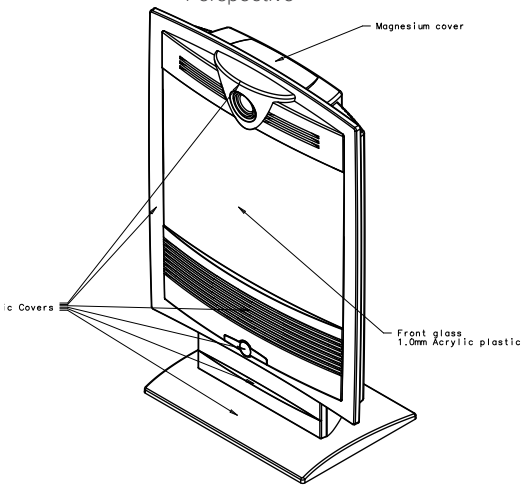

Top View

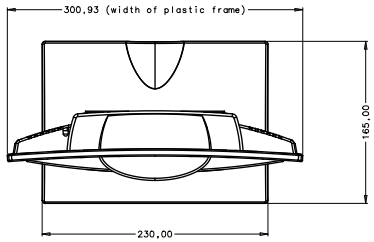

Dimensions

Edge 95/75 MXP

See dimensions for the Cisco TelePresence PrecisionHD 720p Camera overleaf.

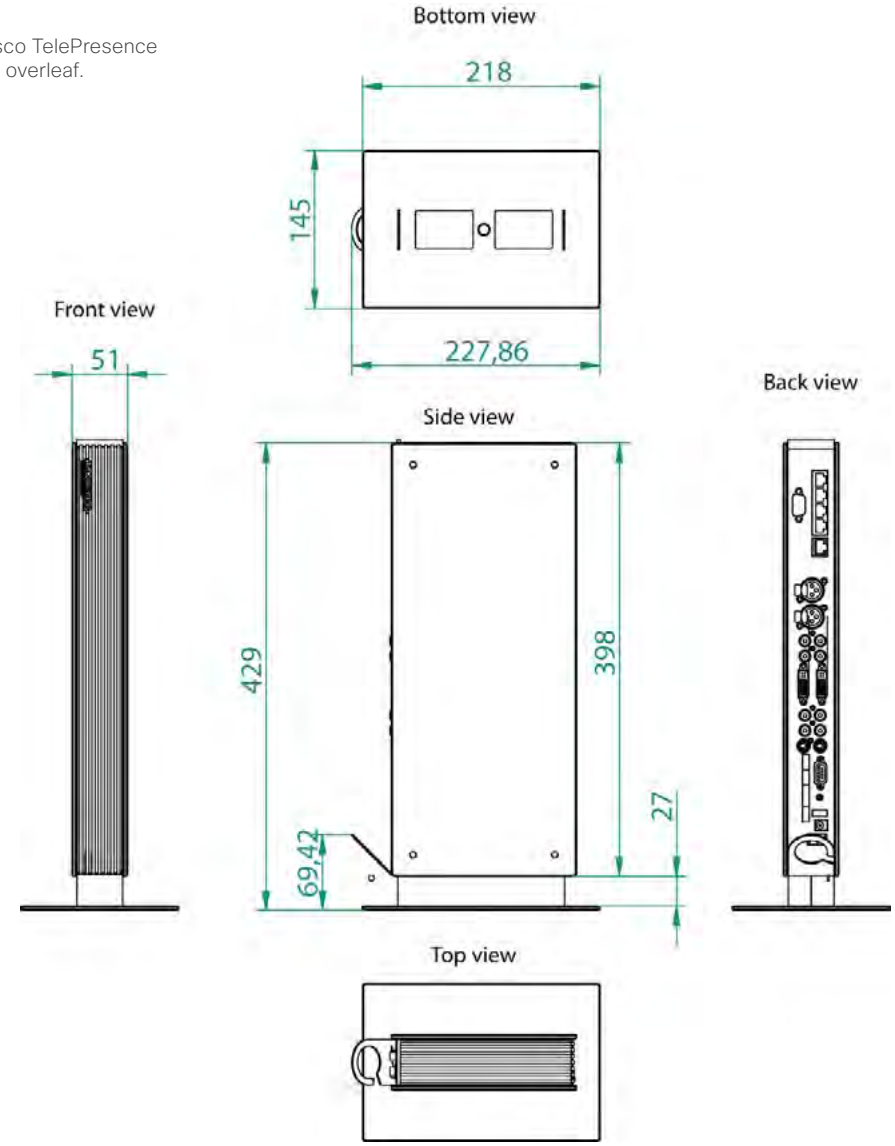

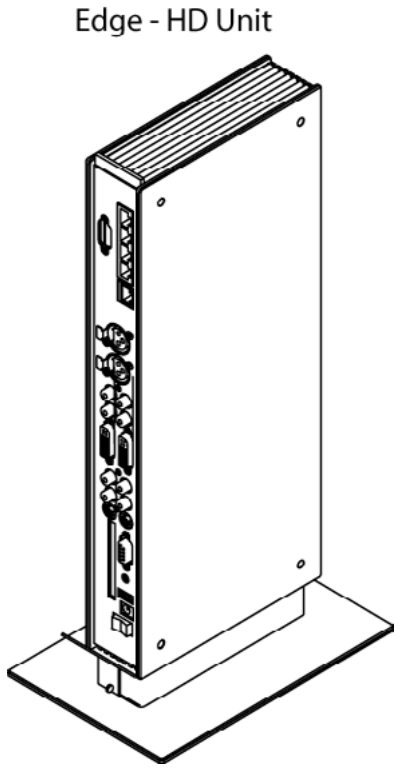

Dimensions

PrecisionHD 720p camera

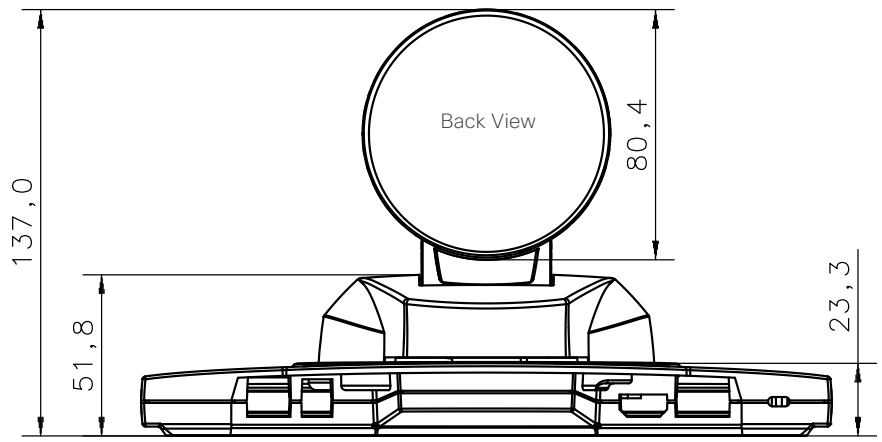

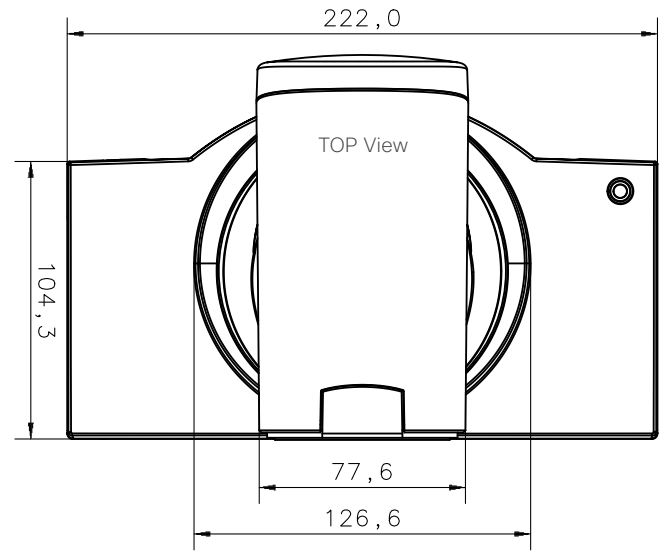

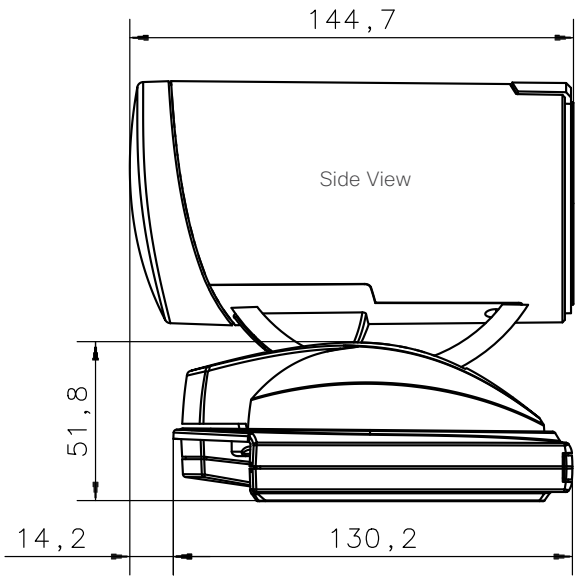

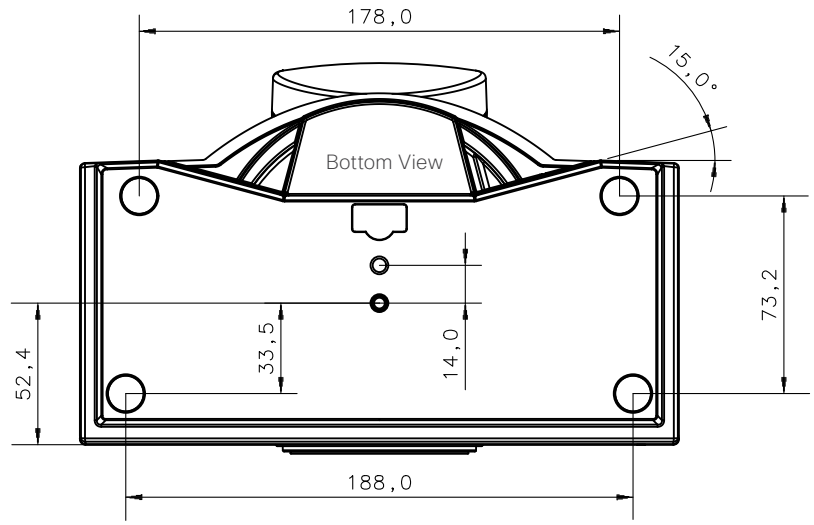

Technical specifications

Codec 6000 MXP

UNIT DELIVERED COMPLETE WITH:
Codec, PrecisionHD 720p camera, microphone, remote control.

BANDWIDTH
H.320 up to 2 Mbps
H.323 up to 4 Mbps point-to-point
SIP up to 4 Mbps
Up to 6 Mbps total MultiSite bandwidth

FIREWALL TRAVERSAL
TANDBERG ExpresswayTM Technology
Auto NAT
H.460.18, H.460.19 Firewall Traversal

VIDEO STANDARDS
H.261, H.263, H.263+, H.263++ (Natural Video), H.264, H.264 RCDO

VIDEO FEATURES
Native 16:9 Widescreen
Advanced Screen Layouts
Picture in Picture (PIP)
Picture outside Picture & Large POP
Side by Side
PC Zoom
Intelligent Video Management
Simultaneous videoconference & local PC mode
Local Auto Layout

VIDEO INPUTS (6 INPUTS)
1 x HD Main Camera or 1 x MiniDin, S-video: main camera
1 x MiniDin, S-video: auxiliary/document camera
1 x RCA/Phono, composite: document camera/aux
1 x RCA/Phono, composite: VCR
1 x DVI-I: PC
Input: 800 x 600 (@ 60, 72,75,85 hz), 1024 x 768 (@ 60,70,75 hz), 1280 x 720 (HD720P) (@ 50, 60 Hz), 1280 x 1024 @ 60 hz
Extended Display Identification Data (EDID)

VIDEO OUTPUTS (6 OUTPUTS)
1 x MiniDin, S-video: main monitor
1 x MiniDin, S-video: dual monitor
1 x RCA/Phono, composite: main monitor or VCR
1 x RCA/Phono, composite: dual monitor or VCR
2 x DVI-I/XGA: main and dual monitor
XGA OUTPUT
800 x 600 @ 75hz, 1024 x 768 @ 60 hz, 1280 x 768 (WXGA) @ 60 hz, 1280 x 720 (HD720p) @ 60 Hz
VESA Monitor Power Management

VIDEO FORMAT
NTSC, PAL, VGA, SVGA, XGA, W-XGA, SXGA and HD720p

LIVE VIDEO RESOLUTIONS
NATIVE NTSC:
400p (528 x 400 pixels)
4SIF (704 x 480 pixels), Digital Clarity
Interlaced SIF (iSIF 352 x 480 pixels), Natural Video
SIF (352 x 240 pixels)
NATIVE PAL:
448p (576 x 448 pixels)
4CIF (704 x 576 pixels), Digital Clarity
Interlaced CIF (iCIF 352 x 576 pixels), Natural Video
CIF (352 x 288 pixels)
QCIF (176 x 144 pixels)
SQCIF (128 x 96 pixels) decode only
NATIVE PC RESOLUTIONS:
XGA (1024 x 768)
SVGA (800 x 600 pixels)
VGA (640 x 480 pixels)
WIDE RESOLUTIONS:
w288p (512 x 288 pixels)
w448p (768 x 448 pixels)
w576p (1024 x 576 pixels)
w720p (1280 x 720 pixels)

STILL IMAGE TRANSFER
CIF, SIF, 4CIF (H.261 Annex D), 4SIF, VGA, SVGA, XGA

AUDIO STANDARDS
G.711, G.722, G.722.1, G.728 , 64 bit & 128 bit MPEG4 AAC-LD

AUDIO FEATURES
CD-Quality 20KHz Mono and Stereo
Telephone add-on via MultiSite
Four separate acoustic echo cancellers
Audio mixer
Automatic Gain Control (AGC)*
Automatic Noise Reduction
Audio level meters
VCR ducking
Optional Stereo Package
Packet loss management
Active lip synchronization
Digital Natural Audio Module (DNAM)
5*50 W output power
5 integrated speakers and 2 optional satellite speakers
GSM interference audio feature

AUDIO INPUTS (4 INPUTS)
3 x microphone, 24V phantom powered, XLR connector, each with separate echo cancellers, the third microphone can be set for line level
1 x RCA/Phono, Line Level: separate echo canceller
1 x RCA/Phono, Line Level: auxiliary (or VCR/DVD Stereo L)
1 x RCA/Phono, Line Level: VCR/DVD (Stereo R)

AUDIO OUTPUTS (3 OUTPUTS)
1 x RCA/Phono, S/PDIF (mono/stereo) or Analogue Line Level: main audio or Analogue Stereo L
1 x RCA/Phono, Line Level: auxiliary (or Analogue Stereo R or VCR Stereo L)
1 x RCA/Phono, Line Level: VCR (mono or Stereo R)

FRAME RATES
30 frames per second @ 168 kbps and above
60 fields per second @ 336 kbps and above (Point-to-point)

DUAL STREAM
DuoVideo
H.239 dual stream
Dynamic bandwidth adjustment (H.323)
Available on H.323 & H.320
Available in Multisite from any site

NETWORK FEATURES
Auto H.320/H.323 dialing
SIP
Downspeeding
Programmable network profiles
Intelligent Call Management
HO on ISDN-PRI Facility
Maximum call length timer
Automatic SPID and line number configuration
(National ISDN, GR-2941-CORE)
SoftMux
NATO standard KG194/KIV-7 encryptor support
H.331 Broadcast Mode
URI Dialing
Universal IMUX Support

MULTISITE FEATURES
Audio and Video Transcoding
Video rate matching from 56 kbps – maximum conference rate
CP4,CP 5 + 1 and Voice Switched
Best Impression (Automatic CP Layouts)
H.264, Encryption, Digital Clarity
Dual Stream from any site
ISDN & IP Downspeeding and IPLR
MultiSite (H.243) Cascading on ISDN & IP
Unicode h.243 Terminal Names
Dial in/Dial out
Chair control for host system
Snapshot of ongoing conference (JPEG)
Snapshot of ongoing DuoVideo/H.239 presentation (JPEG)
Separate welcome page for encrypted conferences
Conference rates up to 6 Mbps
Up to 6 video and 5 audio sites
4 sites @ 2 Mbps, 6 sites @ 768 (+telephone calls)
Mix ISDN (BRI or PRI), or Serial Interface (V.35) with IP up to maximum conference rate
Mulitway™

EMBEDDED ENCRYPTION
H.320 and H.323 point-to-point and multipoint calls
Standards-based: H.233, H.234, H.235 v2&v3, DES and AES
NIST-validated AES
NIST-validated DES
Automatic key generation and exchange
Supported in Dual Stream & MultiSite

IP NETWORK FEATURES
IEEE 802.1x/EAP Network Authentication
H.235 Gatekeeper Authentication
DNS lookup for service configuration
Differentiated Services (DiffServ)
Resource Reservation Protocol (RSVP)
IP precedence
IP type of service (ToS)
IP adaptive bandwidth management (including flow control)
Auto Gatekeeper discovery
Dynamic playout and lip-sync buffering
Intelligent Packet Loss Recovery (IPLR)
H.245 DTMF tones in H.323
Cisco CallManager integration using ECS
IP Address Conflict Warning
Date and Time support via NTP
Call Services

IPv6 NETWORK SUPPORT
Dual Stack IPv4 and IPv6 simultaneous support
Net service support on IPv6: Telnet, SSH, HTTP, HTTPS, ftp, SNMP, DNS, NTP, DHCP
Media support on IPv6: H.323, SIP, Streaming

SECURITY FEATURES

Technical specifications for Codec 6000 MXP, cont...

Management via HTTPS and SSH
IP Administration Password
Menu Administration Password
Dialing Access code
Streaming password
H.243 MCU Password
VNC password
SNMP security alerts
Disable IP services
MD-5 Challenge
Network Settings protection
SIP Authentication via NTLM
SIP Authentication via Digest
FIPS Mode

NETWORK INTERFACES

6 x ISDN BRI (RJ-45), S-interface
1 x E1/T1 G.703 (RJ-45) for ISDN PRI or Leased E1/T1 mode: Manual or Auto (Data Triggered)
1 x E1/T1 G.703 (RJ-45) for future usage
1 x LAN/Ethernet (RJ-45) 10/100 Mbit
(LAN/DSL/cable modem)
1 x X.21/V.35/RS-449 with RS-366 dialing, RS-366 Adtran IMUX, Leased Line, Data Triggered, and Manual
1 x USB for future use

ETHERNET/INTERNET/INTRANET CONNECTIVITY

TCP/IP, DHCP, ARP, FTP, Telnet, HTTP, HTTPS, SOAP and XML,
MD-5 Challenge
SNMP Enterprise Management
Internal web server
Internal streaming server

OTHER MAJOR STANDARDS SUPPORTED

H.231, H.233, H.234, H.235 v2&v3, H.239, H.241, H.243, H.281, BONDING (ISO 13871), H.320, H.323, H.331,
RFC 3261, RFC 2237, RFC 3264, RC 3311. RFC 3550, RFC 2032, RFC 2190, RFC 2429, RFC 3407

PRECISIONHD 720p CAMERA

7 x zoom 1/3" CMOS +10°/-20° tilt +/- 90° pan
42° vertical field of view
72° total vertical field of view
70° horizontal field of view
250° total horizontal field of view
Focus distance 0.3m–infinity
1280 x 720 pixels progressive @ 30fps
Automatic or manual focus/brightness/whitebalance
Far-end camera control
15 near and far-end camera presets
Voice-activated camera positioning
Daisy-chain support (Visca protocol camera)

CLOSED CAPTIONING/TEXT CHAT

T.140 text chat available from RS-232, Telnet, Web and User Interface

PRESENTATIONS AND COLLABORATION

Natural Presenter Package including:
PC Presenter (DVI-I, SXGA In)
PC SoftPresenter
Digital Clarity & Native Formats
Advanced Video Layouts
Streaming compatible with Cisco IP/TV,
Apple QuickTime®, RealPlayer® v8, VLC Media Player etc.
DuoVideo
H.239

SYSTEM MANAGEMENT

Support for the Cisco TelePresence Management Suite (TMS)
Total management via embedded web server, SNMP, Telnet, SSH, XML, SOAP and FTP
Remote software upload: via web server, ftp server or ISDN
1 x RS-232 local control and diagnostics
Remote control and on-screen menu system
External Services from TMS

DIRECTORY SERVICES

Support for Local Directory (My Contacts), Corporate Directory and Global Directory
Unlimited entries using Server Directory** supporting LDAP and H.350
Unlimited number of entries for Corporate directory (through TMS) within a maximum of 40 directories
400 number global directory
200 number local directory
16 dedicated MultiSite entries
Received Calls with Date and Time
Directories in Local Languages
Placed Calls with Date and Time
Missed Calls with Date and Time

19 SELECTABLE MENU LANGUAGES

Arabic, Chinese, Traditional Chinese, English, French, German, Italian, Japanese, Korean, Norwegian, Portuguese, Russian, Spanish, Suomi, Swedish, Thai Chinese, Korean, Japanese and Russian Input Method Editor

CUSTOMIZED WELCOME SCREEN AND COMPANY LOGO

Picture JPEG (logo.jpg): Recommended maximum size is 704x576 for Welcome Screen and 352x288 for Encryption Required Screen

POWER

100–120/200–240VAC, 60/50Hz, 6A

OPERATING TEMPERATURE AND HUMIDITY

0° C to 40° C (32° F to 104° F) ambient temperature
10% to 90% Relative Humidity (RH)

STORAGE AND TRANSPORT TEMPERATURE

-20° C to 60° C (-4° F to 140° F) at RH 10–90% (non-condensing)

APPROVALS

EU/EEC
Directive
1999/5/EC
Contact your Cisco representative for an official signed version of the EC Declaration of Conformity.
Product Safety
Standard EN 60950-1
EMC
Standard EN 55022, Class B
Standard EN 55024
Standard EN 61000-3-2/-3-3
Telecom Compliance
TBR3/TBR4
USA
Product Safety
Approved according to UL 60950-1
EMC
FCC CFR 47 Part 15 Class B
Class B Notice for FCC
Note: This equipment has been tested and found to comply with the limits for a Class B digital device, pursuant to part 15 of the FCC Rules. These limits are designed to provide reasonable protection against harmful interference in a residential installation. This equipment generates, uses and can radiate radio frequency energy and, if not installed and used in accordance with the instructions, may cause harmful interference to radio communications. However, there is no guarantee that interference will not occur in a particular installation. If this equipment does cause harmful interference to radio or television reception, which can be determined by turning the equipment off and on, the user is encouraged to try to correct the interference by one or more of the following measures:
Reorient or relocate the receiving antenna.
Increase the separation between the equipment and receiver.
Connect the equipment into an outlet on a circuit different from that to which the receiver is connected.
Consult the dealer or an experienced radio/TV technician for help.
Telecom Compliance
TIA-1096-A
TIA-986-B
Contact your Cisco representative for an official signed version of the Supplier's Declaration of Conformity according to telecom standards.
Canada
Product Safety
CAN/CSA C22.2 No. 60950-1
EMC
ICES-003 / NMB-003 Class B
This Class B digital apparatus complies with Canadian ICES-003.
Cet appareil numérique de la classe B est conforme à la norme NMB-003 du Canada.
Telecom Compliance
CS-03 Part I, VI
Contact your Cisco representative for an official signed version of the Supplier's Declaration of Conformity according to telecom standards.
Other Markets
For relevant compliance information/documentation for markets not mentioned above, contact your Cisco representative.

* According to TIA-968-B FCC Part 68, AGC must not be disabled when this product is used in the U.S and Canada.
** Requires TMS version 9.0 or newer.
All specifications subject to change without notice, system specifics may vary.
All images in these materials are for representational purposes only, actual products may d i f f e r.
TANDBERG and Expressway are registered trademarks or trademarks of TANDBERG in the U.S. and other countries. All other trademarks are property of their respective owners.

MTBF PRODUCT RELIABILITY/MTBF

The predicted reliability is expressed in the expected random Mean Time Between Failures (MTBF) for the electronic components based on the Power On Hours:
Power On Hours (POH) > 69 000 hours
Useful Life Cycle > 6 years
ISO 9001 cer tificate is available upon request

August 2011

Technical specifications

Codec 3000 MXP

UNIT DELIVERED COMPLETE WITH:
Ciodec, PrecisionHD 720p camera, microphone, remote control.

BANDWIDTH
H.320 up to 512 kbps
H.323 up to 2 Mbps
SIP up to 2 Mbps

FIREWALL TRAVERSAL
TANDBERG ExpresswayTM Technology
Auto NAT
H.460.18, H.460.19 Firewall Traversal

VIDEO STANDARDS
H.261, H.263, H.263+, H.263++ (Natural Video), H.264, H.264 RCDO

VIDEO FEATURES
Native 16:9 Widescreen
Advanced Screen Layouts
Picture in Picture (PIP)
Picture outside Picture & Large POP
Side by Side
PC Zoom
Intelligent Video Management
Simultaneous videoconference & local PC mode
Local Auto Layout

VIDEO INPUTS (5 INPUTS)
1 x 9 Pin DSUB:HD Main camera or S-video & control main camera
1 x MiniDin, S-video: auxiliary/document camera
1 x RCA/Phono, composite: document camera/aux
1 x RCA/Phono, composite: VCR
1 x DVI-I: PC
Input: 800 x 600 (@ 60, 72,75,85 hz), 1024 x 768 (@ 60, 70, 75 hz), 1280 x 720 (HD720P) (@ 50, 60 Hz), 1280 x 1024 @ 60hz
Extended Display Identification Data (EDID)

VIDEO OUTPUTS (4 OUTPUTS)
1 x MiniDin, S-video: main monitor
1 x RCA/Phono, composite: main monitor or VCR
1 x RCA/Phono, composite: dual monitor or VCR
1 x DVI-I/XGA: main or second monitor
XGA OUTPUT
800 x 600 @ 75hz, 1024 x 768 @ 60 hz, 1280 x 768 (WXGA)
@ 60 hz, 1280 x 720 (HD720p) @ 60 Hz
VESA Monitor Power Management

VIDEO FORMAT
NTSC, PAL, VGA, SVGA, XGA, W-XGA, SXGA and HD720p

LIVE VIDEO RESOLUTIONS
NATIVE NTSC:
400p (528 x 400 pixels)
4SIF (704 x 480 pixels), Digital Clarity
Interlaced SIF (iSIF 352 x 480 pixels), Natural Video
SIF (352 x 240 pixels)
NATIVE PAL:
448p (576 x 448 pixels)
4CIF (704 x 576 pixels), Digital Clarity
Interlaced CIF (iCIF 352 x 576 pixels), Natural Video
CIF (352 x 288 pixels)
QCIF (176 x 144 pixels)
SQCIF (128 x 96 pixels) decode only
NATIVE PC RESOLUTIONS:
XGA (1024 x 768)
SVGA (800 x 600 pixels)
VGA (640 x 480 pixels)
WIDE RESOLUTIONS:
w288p (512 x 288 pixels)
w448p (768 x 448 pixels)
w576p (1024 x 576 pixels)
w720p (1280 x 720 pixels)

STILL IMAGE TRANSFER
CIF, SIF, 4CIF (H.261 Annex D), 4SIF, VGA, SVGA, XGA

AUDIO STANDARDS
G.711, G.722, G.722.1, G.728 , 64 bit & 128 bit MPEG4 AAC-LD

AUDIO FEATURES
CD-Quality 20KHz Mono and Stereo
Telephone add-on via MultiSite
Two separate acoustic echo cancellers
Audio mixer
Automatic Gain Control (AGC)*
Automatic Noise Reduction
Audio level meters
VCR ducking
Packet loss management
Active lip synchronization
Digital Natural Audio Module (DNAM)
2*30 W output power
2 integrated speakers
GSM interference audio feature

AUDIO INPUTS (4 INPUTS)
2 x microphone, 24V phantom powered, XLR connector
1 x RCA/Phono, Line Level: auxiliary (or VCR Stereo L)
1 x RCA/Phono, Line Level: VCR/DVD (Stereo R)

AUDIO OUTPUTS (2 OUTPUTS)
1 x RCA/Phono, S/PDIF (mono/stereo) or Analogue Line Level: main audio or Analogue Stereo L
1 x RCA/Phono, Line Level: VCR or Analogue Stereo R

FRAME RATES
30 frames per second @ 168 kbps and above
60 fields per second @ 336 kbps and above (Point-to-point)

DUAL STREAM
DuoVideo
H.239 dual stream
Dynamic bandwidth adjustment (H.323)
Available on H.323 & H.320
Available in Multisite from any site

NETWORK FEATURES
Auto H.320/H.323 dialing
SIP
Downspeeding
Programmable network profiles
Intelligent Call Management
Maximum call length timer
Automatic SPID and line number configuration (National ISDN, GR-2941-CORE)
SoftMux
H.331 Broadcast Mode
NATO standard KG194/KIV-7 encryptor support***
URI Dialing
Universal IMUX Support (3000 Net)

MULTISITE FEATURES
H.323/H.320/SIP/Telephony/VoIP in the same conference
Audio and Video Transcoding
Video rate matching from 56 kbps – maximum conference rate
CP4 and Voice Switched
Best Impression (Automatic CP Layouts)
H.264, Encryption, Digital Clarity
Dual Stream from any site
ISDN & IP Downspeeding and IPLR
MultiSite (H.243) Cascading on H,320 & H.323
Unicode h.243 Terminal Names
Dial in/Dial out
Chair control for host system
Snapshot of ongoing conference (JPEG)
Snapshot of ongoing DuoVideo/H.239 presentation (JPEG)
Separate welcome page for encrypted conferences
Conference rates up to 2.3 Mbps with optional bandwidth upgrade (1.5 Mbps is standard conference rate)
Up to 4 video and 3 audio sites
4 sites @ 768 kbps (+telephone calls)
Mix ISDN-BRI and IP up to maximum conference rate
Mulitway™

EMBEDDED ENCRYPTION
H.320 and H.323 point-to-point calls
Standards-based: H.233, H.234, H.235 v2&v3, DES and AES
NIST-validated AES
NIST-validated DES
Automatic key generation and exchange
Supported in Dual Stream

IP NETWORK FEATURES
IEEE 802.1x/EAP Network Authentication
H.235 Gatekeeper Authentication
DNS lookup for service configuration
Differentiated Services (DiffServ)
Resource Reservation Protocol (RSVP)
IP precedence
IP type of service (ToS)
IP adaptive bandwidth management (including flow control)
Auto Gatekeeper discovery
Dynamic playout and lip-sync buffering
Intelligent Packet Loss Recovery (IPLR)
H.245 DTMF tones in H.323
Cisco CallManager integration using ECS
IP Address Conflict Warning
Date and Time support via NTP
Call Services

IPv6 NETWORK SUPPORT
Dual Stack IPv4 and IPv6 simultaneous support
Net service support on IPv6: Telnet, SSH, HTTP, HTTPS, ftp, SNMP, DNS, NTP, DHCP
Media support on IPv6: H.323,SIP, Streaming

SECURITY FEATURES
Management via HTTPS and SSH
IP Administration Password
Menu Administration Password
Dialing Access code

Technical specifications for Codec 3000 MXP, cont...

Streaming password
H243 MCU Password
VNC password
SNMP security alerts
Disable IP services
MD-5 Challenge
Network Settings protection
SIP Authentication via NTLM
SIP Authentication via Digest
FIPS Mode

NETWORK INTERFACES

4 x ISDN BRI (RJ-45), S-interface
1 x LAN/Ethernet (RJ-45) 10/100 Mbit (LAN/DSL/cable modem)
1 x PC card slot (PCMCIA) for wireless LAN
1 x X.21/V.35/RS-449 with RS-366 dialing, RS-366 Adtran IMUX, Leased Line, Data Triggered, and Manual***
1 x USB for future use

WIRELESS LAN SUPPORT

Compliant with IEEE 802.11b, up to 11 Mbit
Support for 64/128 bit encryption (WEP)
Infrastructure or ad-hoc mode

ETHERNET/INTERNET/INTRANET CONNECTIVITY

TCP/IP, DHCP, ARP, FTP, Telnet, HTTP, HTTPS, SOAP and XML,
MD-5 Challenge
SNMP Enterprise Management
Internal web server
Internal streaming server

OTHER MAJOR STANDARDS SUPPORTED

H.231, H.233, H.234, H.235 v2&v3, H.239, H.241,H.243, H.281, BONDING (ISO 13871), H.320, H.323,H.331, RFC 3261, RFC 2237, RFC 3264, RC 3311. RFC 3550, RFC 2032, RFC 2190, RFC 2429, RFC 3407

PrecisionHD CAMERA

7 x zoom 1/3" CMOS +10°/-20° tilt +/- 90° pan
42° vertical field of view
72° total vertical field of view
70° horizontal field of view
250° total horizontal field of view
Focus distance 0.3m–infinity
1280 x 720 pixels progressive @ 30fps
Automatic or manual focus/brightness/whitebalance
Far-end camera control
15 near and far-end camera presets
Voice-activated camera positioning
Daisy-chain support (Visca protocol camera)

CLOSED CAPTIONING/TEXT CHAT

T.140 text chat available from RS-232, Telnet, Web and User Interface

PRESENTATIONS AND COLLABORATION

Natural Presenter Package including:
PC Presenter (DVI-I, SXGA In)
PC SoftPresenter
Digital Clarity & Native Formats
Advanced Video Layouts
Streaming compatible with Cisco IP/TV,
Apple QuickTime®, RealPlayer® v8, VLC Media Player etc.
DuoVideo
H.239

SYSTEM MANAGEMENT

Support for the Cisco TelePresence Management Suite (TMS)
Total management via embedded web server, SNMP,
Telnet, SSH, FTP and SOAP
Remote software upload: via web server, ftp server or ISDN
1 x RS-232 local control and diagnostics
Remote control and on-screen menu system
External Services from TMS

DIRECTORY SERVICES

Support for Local directory (My Contacts), Corporate Directory and Global Directory
Unlimited entries using Server directory** supporting LDAP and H.350
Unlimited number of entries for Corporate directory (through TMS) within a maximum of 40 directories
400 number global directory
200 number local directory
16 dedicated MultiSite entries
Received Calls with Date and Time
Directories in Local Languages
Placed Calls with Date and Time
Missed Calls with Date and Time

19 SELECTABLE MENU LANGUAGES

Arabic, Chinese, Traditional Chinese, English, French,
German, Italian, Japanese, Korean, Norwegian,
Portuguese, Russian, Spanish, Suomi, Swedish, Thai
Chinese, Korean, Japanese and Russian Input Method Editor

CUSTOMIZED WELCOME SCREEN AND COMPANY LOGO

Picture JPEG (logo.jpg): Recommended maximum size is 704x576 for Welcome Screen and 352x288 for Encryption Required Screen

POWER

100–240VAC, 60/50Hz, 6A

OPERATING TEMPERATURE AND HUMIDITY

0° C to 40° C (32° F to 104° F) ambient temperature
10% to 90% Relative Humidity (RH)

STORAGE AND TRANSPORT TEMPERATURE

-20° C to 60° C (-4° F to 140° F) at RH 10–90% (non-condensing)

APPROVALS

EU/EEC
Directive
1999/5/EC
Contact your Cisco representative for an official signed version of the EC Declaration of Conformity.
Product Safety
Standard EN 60950-1
EMC
Standard EN 55022, Class A
Standard EN 55024
Standard EN 61000-3-2/-3-3
Class A Warning for EU/EEC
This is a Class A product. In a domestic environment this product may cause radio interference, in which case the user may be required to take adequate measures.
Telecom Compliance
TBR3
USA
Product Safety
Approved according to UL 60950-1
EMC
FCC CFR 47 Part 15 Class A
Class A Notice for FCC:
This equipment has been tested and found to comply with the limits for a Class A digital device, pursuant to Part 15 of the FCC Rules. These limits are designed to provide reasonable protection against harmful interference when the equipment is operated in a commercial environment. This equipment generates, uses, and can radiate radio frequency energy and, if not installed and used in accordance with the instruction manual, may cause harmful interference to radio communications.
Operation of this equipment in a residential area is likely to cause harmful interference in which case users will be required to correct the interference at their own expense.
Telecom Compliance
TIA-1096-A
TIA-986-B
Contact your Cisco representative for an official signed version of the Supplier's Declaration of Conformity according to telecom standards.
Canada
Product Safety
CAN/CSA C22.2 No. 60950-1
EMC
ICES-003 / NMB-003 Class A
Class A Notice for Canada:
This Class A digital apparatus complies with Canadian ICES-003.
Cet appareil numérique de la classe A est conforme à la norme NMB-003 du Canada.
Telecom Compliance
CS-03 Part I, VI
Contact your Cisco representative for an official signed version of the Supplier's Declaration of Conformity according to telecom standards.
Other Markets
For relevant compliance information/documentation for markets not mentioned above, contact your Cisco representative.

* According to TIA-968-B FCC Part 68, AGC must not be disabled when this product is used in the U.S and Canada.
** Requires TMS version 9.0 or newer.
*** Optional equipment, must be specified at the time of order, Serial Port replaces ISDN BRI
All specifications subject to change without notice, system specifics may vary.
All images in these materials are for representational purposes only, actual products may d i f f e r.
TANDBERG and Expressway are registered trademarks or trademarks of TANDBERG in the U.S. and other countries. All other trademarks are property of their respective owners.

MTBF PRODUCT RELIABILITY/MTBF

The predicted reliability is expressed in the expected random Mean Time Between Failures (MTBF) for the electronic components based on the Power On Hours:
Power On Hours (POH) > 69 000 hours
Useful Life Cycle > 6 years
ISO 9001 cer tificate is available upon request

August 2011

Technical specifications

1700 MXP

UNIT DELIVERED COMPLETE WITH:
Integrated HD Camera with camera cover, 20" Widescreen LCD, wireless remote control, microphone, and cables

LCD SCREEN
Widescreen LCD (16:9)
Wide view angle screen
WXGA; 1366 x 768
Auto or manual brightness

BANDWIDTH
H.323 up to 2 Mbps
SIP up to 2 Mbps

FIREWALL TRAVERSAL
TANDBERG Expressway TechnologyTM
Auto NAT
H.460.18, H.460.19 Firewall Traversal

VIDEO STANDARDS
H.261, H.263, H.263+, H.263++ (Natural Video), H.264, H.264 RCDO

VIDEO FEATURES
Native 16:9 Widescreen
Advanced Screen Layouts
Picture in Picture (PIP)
Picture outside Picture (POP) & Large POP
Side by Side
PC Zoom
Intelligent Video Management
Simultaneous videoconference & local PC mode
Local Auto Layout

VIDEO INPUTS
1 x DVI-I/SXGA: PC
PC using VNC (SoftPresenter)
1 x DVI-I: PC
Input: 800 x 600 (@ 60, 72, 75, 85 Hz), 1024 x 768 (@ 60, 70, 75 Hz), 1280 x 720 (HD720P) (@ 50, 60 Hz), 1280 x 1024 @ 60/Hz
Extended Display Identification Data (EDID)

VIDEO FORMAT
NTSC, PAL, VGA, SVGA, XGA, W-XGA, SXGA and HD720p

LIVE VIDEO RESOLUTIONS
NATIVE NTSC:
400p (528 x 400 pixels)
4SIF (704 x 480 pixels), Digital Clarity
Interlaced SIF (iSIF 352 x 480 pixels), Natural Video
SIF (352 x 240 pixels)
NATIVE PAL:
448p (576 x 448 pixels)
4CIF (704 x 576 pixels), Digital Clarity
Interlaced CIF (iCIF 352 x 576 pixels), Natural Video
CIF (352 x 288 pixels)
QCIF (176 x 144 pixels)
SQCIF (128 x 96 pixels) decode only
NATIVE PC RESOLUTIONS:
XGA (1024 x 768 pixels)
SVGA (800 x 600 pixels)
VGA (640 x 480 pixels)
WIDE RESOLUTIONS:
w288p (512 x 288 pixels)
w448p (768 x 448 pixels)
w576p (1024 x 576 pixels)
w720p (1280 x 720 pixels)

STILL IMAGE TRANSFER
CIF, SIF, 4CIF (H.261 Annex D), 4SIF, VGA, SVGA, XGA

AUDIO STANDARDS
G.711, G.722, G.722.1, G.728 , 64 bit & 128 bit MPEG4 AAC-LD

AUDIO FEATURES
CD-Quality 20 KHz Mono and Stereo
Telephone add-on via MultiSite
Two separate acoustic echo cancellers
Audio mixer
Automatic Gain Control (AGC)*
Automatic Noise Reduction
Audio level meters
VCR ducking
Packet loss management
Active lip synchronization
GSM interference audio feature

PRIVACY FEATURE
Headset Microphone: 3.5mm Jack
Headset loudspeaker: 3.5mm Stereo jack

AUDIO INPUTS (2 INPUTS)
2 Built-in microphones
PC Audio input: 3.5mm Stereo Jack

FRAME RATES
30 frames per second @ 168 kbps and above
60 fields per second @ 336 kbps and above (Point-to-point)

DUAL STREAM
DuoVideo
H.239 dual stream
Dynamic bandwidth adjustment (H.323)
Available on H.323 & H.320
Available in MultiSite from any site

NETWORK FEATURES
SIP
Downspeeding
Programmable network profiles
Intelligent Call Management
Maximum call length timer
URI Dialing

MULTISITE FEATURES
H.323/SIP/Telephony/VoIP in the same conference
Audio and Video Transcoding
Video rate matching from 56 kbps – maximum conference rate
CP4 and Voice Switched
Best Impression (Automatic CP Layouts)
H.264, Encryption, Digital Clarity
Dual Stream from any site
IP Downspeeding and IPLR
MultiSite (H.243) Cascading on H.323
Unicode H.243 Terminal Names
Dial in/Dial out
Chair control for host system
Snapshot of ongoing conference (JPEG)
Snapshot of ongoing DuoVideo/H.239 presentation (JPEG)
Separate welcome page for encrypted conferences
Conference rates up to 2.3 Mbps
Up to 4 video and 3 audio sites
4 sites @ 768 kbps (+telephone calls)
Mulitway™

EMBEDDED ENCRYPTION
H.323 point-to-point and multipoint calls
Standards-based: H.233, H.234, H.235 v2&v3, DES and AES
NIST-validated AES
NIST-validated DES
Automatic key generation and exchange
Supported in Dual Stream & MultiSite

IP NETWORK FEATURES
IEEE 802.1x/EAP Network Authentication
H.235 Gatekeeper Authentication
DNS lookup for service configuration
Differentiated Services (DiffServ)
Resource Reservation Protocol (RSVP)
IP precedence
IP type of service (ToS)
IP adaptive bandwidth management (including flow control)
Auto Gatekeeper discovery
Dynamic playout and lip-sync buffering
Intelligent Packet Loss Recovery (IPLR)
H.245 DTMF tones in H.323
Cisco CallManager integration using ECS
IP Address Conflict Warning
Date and Time support via NTP
Call Services

IPv6 NETWORK SUPPORT
Dual Stack IPv4 and IPv6 simultaneous support
Net service support on IPv6: Telnet, SSH, HTTP, HTTPS, ftp, SNMP, DNS, NTP, DHCP
Media support on IPv6: H.323, SIP, Streaming

SECURITY FEATURES
Management via HTTPS and SSH
IP Administration Password
Menu Administration Password
Dialing Access code
Streaming password
H.243 MCU Password
VNC password
SNMP security alerts
Disable IP services
MD-5 Challenge
Network Settings protection
SIP Authentication via NTLM
SIP Authentication via Digest
FIPS Mode

NETWORK INTERFACES
Internal 2 port Ethernet switch
1 x LAN/Ethernet (RJ-45) 10/100 Mbit for PC
1 x LAN/Ethernet (RJ-45) 10/100 Mbit (LAN/DSL/cable modem)
1 x USB for future usage

ETHERNET/INTERNET/INTRANET CONNECTIVITY
TCP/IP, DHCP, ARP, FTP, Telnet, HTTP, HTTPS, SOAP and XML,
MD-5 Challenge
SNMP Enterprise Management

Technical specifications for 1700 MXP, cont...

Internal web server
Internal streaming server

OTHER MAJOR STANDARDS SUPPORTED

H.231, H.233, H.234, H.235 v2&v3, H.239, H.241, H.243, H.281, H.323,
RFC 3261, RFC 2237, RFC 3264, RC 3311, RFC 3550, RFC 2032, RFC 2190, RFC 2429, RFC 3407

CAMERA

1/3" CMOS 65° horizontal field of view
38° vertical field of view (monitor and camera tilt)
88° total vertical field of view (with monitor and camera tilt)
Manual focus
Automatic or manual brightness/whitebalance
Focus distance 0.3m–infinity
1280 x 720 pixels progressive @ 30fps

CLOSED CAPTIONING/TEXT CHAT

T.140 text chat available from Telnet, Web and User Interface

PRESENTATIONS AND COLLABORATION

Natural Presenter Package including:
PC Presenter (DVI-I, SXGA In)
PC SoftPresenter
Digital Clarity & Native Formats
Advanced Video Layouts
Streaming compatible with Cisco IP/TV,
Apple QuickTime®, RealPlayer® v8, VLC Media Player etc.

SYSTEM MANAGEMENT

Support for Cisco TelePresence Management Suite (TMS)
Total management via embedded web server, SNMP,
Telnet, SSH, FTP and SOAP
Remote software upload: via web server or ftp server
1 x RS-232 local control and diagnostics
Remote control and on-screen menu system
External Services from TMS

DIRECTORY SERVICES

Support for Local, Global and Dynamic Server Directories
Unlimited entries using Server directory** supporting LDAP and H.350
Unlimited number of entries for Corporate directory (through TMS) within a maximum of 40 directories
400 number global directory
200 number local directory
16 dedicated MultiSite entries
Received Calls with Date and Time
Directories in Local Languages
Placed Calls with Date and Time
Missed Calls with Date and Time

19 SELECTABLE MENU LANGUAGES

Arabic, Simplified Chinese, Traditional Chinese, English, French, German, Italian, Japanese, Korean, Norwegian, Portuguese, Russian, Spanish, Suomi, Swedish and Thai
Chinese, Korean, Japanese and Russian Input Method Editor

CUSTOMIZED WELCOME SCREEN AND COMPANY LOGO

Picture JPEG (logo.jpg): Recommended maximum size is 704x576 for Welcome Screen and 352x288 for Encryption Required Screen

POWER

Auto-sensing power supply 100–250 VAC, 50–60 Hz
120W MAX

OPERATING TEMPERATURE AND HUMIDITY

0°C to 40°C (32°F to 104°F) ambient temperature
Up to 90% Relative Humidity (RH)

STORAGE AND TRANSPORT TEMPERATURE

-20°C to 60° (-4°F to 140°) at RH 10–90% (non-condensing)

APPROVALS

EU/EEC
Directives
2006/95/EC (LVD)
2004/108/EC (EMC)
Contact your Cisco representative for an official signed version of the EC Declaration of Conformity
Product Safety
Standard EN 60950-1
EMC
Standard EN 55022, Class A
Standard EN 55024
Standard EN 61000-3-2/-3-3
Class A Warning for EU/EEC
This is a Class A product. In a domestic environment this product may cause radio interference, in which case the user may be required to take adequate measures.
USA
Product Safety
Approved according to UL 60950-1
EMC
FCC CFR 47 Part 15 Class A
Class A Notice for FCC
This equipment has been tested and found to comply with the limits for a Class A digital device, pursuant to Part 15 of the FCC Rules. These limits are designed to provide reasonable protection against harmful interference when the equipment is operated in a commercial environment. This equipment generates, uses, and can radiate radio frequency energy and, if not installed and used in accordance with the instruction manual, may cause harmful interference to radio communications.
Operation of this equipment in a residential area is likely to cause harmful interference in which case users will be required to correct the interference at their own expense.
Contact your Cisco representative for an official signed version of the Supplier's Declaration of Conformity according to telecom standards.
Canada
Product Safety
CAN/CSA C22.2 No. 60950-1
EMC
ICES-003 / NMB-003 Class A
Class A Notice for Canada
This Class A digital apparatus complies with Canadian ICES-003.
Cet appareil numérique de la classe A est conforme à la norme NMB-003 du Canada.
Other Markets
For relevant compliance information/documentation for markets not mentioned above, contact your Cisco representative.

UNIT DIMENSIONS

Height: 51.0 cm (20.1 inches)
Width: 50.0 cm (19.7 inches)
Depth: 16.0 cm (6.3 inches)Footprint: 35.4 cm
(13.9 inches) wide x 16.0 cm (6.3 inches) deep
Weight: 9,90 kg (21.8 lbs)

* According to TIA-968-B FCC Part 68, AGC must not be disabled when this product is used in the U.S and Canada.
** Requires TMS version 9.0 or newer.
All specifications subject to change without notice, system specifics may vary.
All images in these materials are for representational purposes only, actual products may d i f f e r.
TANDBERG and Expressway are registered trademarks or trademarks of TANDBERG in the U.S. and other countries. All other trademarks are property of their respective owners.

MTBF PRODUCT RELIABILITY/MTBF

The predicted reliability is expressed in the expected random Mean Time Between Failures (MTBF) for the electronic components based on the Power On Hours:
Power On Hours (POH) > 69 000 hours
Useful Life Cycle > 6 years
ISO 9001 cer tificate is available upon request

August 2011

Technical specifications

1000 MXP

UNIT DELIVERED COMPLETE WITH:
Wireless remote control, built-in camera, microphone, speakers, cables, 12.1" LCD screen, table-top stand

LCD SCREEN
Wide view angle screen
XGA resolution
Auto or manual brightness

BANDWIDTH
H.320 up to 384 kbps
H.323 up to 768 kbps
SIP up to 768 kbps

FIREWALL TRAVERSAL
TANDBERG Expressway TechnologyTM
Auto NAT
H.460.18, H.460.19 Firewall Traversal

VIDEO STANDARDS
H.261, H.263, H.263+, H.264, H.264 RCDO

VIDEO FEATURES
Intelligent Video Management
Picture in Picture (PIP)
Dual Monitor Emulation (Side by Side)
PC Zoom
Simultaneous videoconference & local PC mode
Local Auto Layout

VIDEO INPUTS (1 INPUT)
Built-in main camera
1 x DVI-I/SXGA: PC
Input: 800 x 600 (@ 60, 72, 75, 85 Hz), 1024 x 768 (@ 60, 70, 75 Hz), 1280 x 1024 @ 60 Hz
Extended Display Identification Data (EDID)

VIDEO FORMAT
NTSC, PAL, VGA, SVGA, XGA, or SXGA

LIVE VIDEO RESOLUTIONS
NATIVE NTSC:
400p (528 x 400 pixels) receive only
4SIF (704 x 480 pixels), Digital Clarity
Interlaced SIF (iSIF 352 x 480 pixels), Natural Video
SIF (352 x 240 pixels)
NATIVE PAL:
448p (576 x 448 pixels) receive only
4CIF (704 x 576 pixels), Digital Clarity
Interlaced CIF (iCIF 352 x 576 pixels), Natural Video
CIF (352 x 288 pixels)
QCIF (176 x 144 pixels)
SQCIF (128 x 96 pixels) decode only
NATIVE PC RESOLUTIONS:
XGA (1024 x 768)
SVGA (800 x 600 pixels)
VGA (640 x 480 pixels)
WIDE RESOLUTIONS:
w288p (512 x 288 pixels)
w448p (768 x 448 pixels) receive only
w576p (1024 x 576 pixels)
w720p (1280 x 720 pixels)

STILL IMAGE TRANSFER
CIF, SIF, 4CIF (H.261 Annex D), 4SIF, VGA, SVGA, XGA

AUDIO STANDARDS
G.711, G.722, G.722.1, G.728, 64 bit MPEG4 AAC-LD

AUDIO FEATURES
CD-Quality 20KHz Mono
Automatic noise reduction
Acoustic echo canceller
Automatic gain control (AGC)*
Packet loss management
Active lip synchronization
GSM interference audio feature

PRIVACY FEATURE
Headset, 2.5 mm mini jack

FRAME RATES
30 frames per second @ 168 kbps and above

DUAL STREAM
DuoVideo
H.239 dual stream
Dynamic bandwidth adjustment (H.323)
Available on H.323 & H.320

NETWORK FEATURES
Auto H.320/H.323 dialing
SIP
Downspeeding
Programmable network profiles
Intelligent Call Management
Maximum call length timer
Automatic SPID and line number configuration
(National ISDN, GR-2941-CORE)
SoftMux
URI Dialing

MULTISITE FEATURES
Mulitway™

EMBEDDED ENCRYPTION
H.320 and H.323 point-to-point calls
Standards-based: H.233, H.234, H.235 v2&v3, DES and AES
NIST-validated AES
NIST-validated DES
Automatic key generation and exchange
Supported in Dual Stream

IP NETWORK FEATURES
IEEE 802.1x/EAP Network Authentication
H.235 Gatekeeper Authentication
DNS lookup for service configuration
Differentiated Services (DiffServ)
Resource Reservation Protocol (RSVP)
IP precedence
IP type of service (ToS)
IP adaptive bandwidth management (including flow control)
Auto Gatekeeper discovery
Dynamic playout and lip-sync buffering
Intelligent Packet Loss Recovery (IPLR)
H.245 DTMF tones in H.323
Cisco CallManager integration using ECS
IP Address Conflict Warning
Date and Time support via NTP
Call Services

IPv6 NETWORK SUPPORT
Dual Stack IPv4 and IPv6 simultaneous support
Net service support on IPv6: Telnet, SSH, HTTP, HTTPS, ftp, SNMP, DNS, NTP, DHCP
Media support on IPv6: H.323, SIP, Streaming

SECURITY FEATURES
Management via HTTPS and SSH
IP Administration Password
Menu Administration Password
Dialing Access code
Streaming password
H.243 MCU Password
VNC password
SNMP security alerts
Disable IP services
MD-5 Challenge
Network settings protection
SIP Authentication via NTLM
SIP Authentication via Digest
FIPS Mode

NETWORK INTERFACES
3 x ISDN BRI (RJ-45), S-interface
1 x LAN/Ethernet (RJ-45) 10/100 Mbit (LAN/DSL/cable modem)
1 x PC card slot (PCMCIA) for wireless LAN
1 x USB for future usage

WIRELESS LAN SUPPORT
Compliant with IEEE 802.11b, up to 11 Mbit
Support for 64/128 bit encryption (WEP)
Infrastructure or ad-hoc mode

ETHERNET/INTERNET/INTRANET CONNECTIVITY
TCP/IP, DHCP, ARP, FTP, Telnet, HTTP, HTTPS, SOAP and XML, MD-5 Challenge
SNMP Enterprise Management
Internal web server
Internal streaming server

OTHER MAJOR STANDARDS SUPPORTED
H.231, H.233, H.234, H.235 v2&v3, H.239, H.241, H.243, H.281, BONDING (ISO 13871), H.320, H.323, H.331
RFC 3261, RFC 2237, RFC 3264, RC 3311, RFC 3550, RFC 2032, RFC 2190, RFC 2429, RFC 3407

CAMERA
1/4" CCD
752(H) x 582(V) resolution
Lens: f=4mm F1:1.2
64° horizontal field of view
49° vertical field of view
Minimum illumination 5.0 lux (video output 50%, AGC on)
Manual focus

CLOSED CAPTIONING/TEXT CHAT
T.140 text chat available from Telnet, Web and User Interface

PRESENTATIONS AND COLLABORATION
Natural Presenter Package including:
PC Presenter (DVI-I, SXGA In)

Technical specifications for 1000 MXP, cont...

PC SoftPresenter
Digital Clarity & Native Formats
Dual Monitor Emulation (Side by Side)
Streaming compatible with Cisco IP/TV,
Apple QuickTime®, RealPlayer® v8, VLC Media Player etc.

SYSTEM MANAGEMENT

Support for the Cisco TelePresence Management Suite (TMS)
Total management via embedded web server, SNMP,
Telnet, SSH, FTP and SOAP
Remote software upload: via web server, ftp server or ISDN
External Services from TMS

DIRECTORY SERVICES

Support for Local directory (My Contacts), Corporate Directory and Global Directory
Unlimited entries using Server directory** supporting LDAP and H.350
Unlimited number of entries for Corporate directory (through TMS) within a maximum of 40 directories
400 number global directory
200 number local directory
Placed Calls with Date and Time
Received Calls with Date and Time
Directories in Local Languages
Last number dialed
Placed Calls with Date and Time
Missed Calls with Date and Time

19 SELECTABLE MENU LANGUAGES

Arabic, Simplified Chinese, Traditional Chinese, English,
French, German, Italian, Japanese, Korean, Norwegian,
Portuguese, Russian, Spanish, Suomi, Swedish and Thai
Chinese, Korean, Japanese and Russian Input Method Editors

CUSTOMIZED WELCOME SCREEN AND COMPANY LOGO

Picture JPEG (logo.jpg): Recommended maximum size
is 704x576 for Welcome Screen and 352x288 for
Encryption Required Screen.

POWER

Auto-sensing power supply
100–250 VAC, 50–60 Hz
45 watts max.

OPERATING TEMPERATURE AND HUMIDITY

0° C to 35° C (32° F to 95° F) ambient temperature
10% to 90% Relative Humidity (RH)

STORAGE AND TRANSPORT TEMPERATURE

-20° C to 60° C (-4° F to 140° F) at RH 10–90%
(non-condensing)

APPROVALS

EU/EEC
Directive
1999/5/EC
Contact your Cisco representative for an official signed version of the EC Declaration of Conformity.
Product Safety
Standard EN 60950-1
EMC
Standard EN 55022, Class B
Standard EN 55024
Standard EN 61000-3-2/-3-3
Telecom Compliance
TBR3
USA
Product Safety
Approved according to UL 60950-1
EMC
FCC CFR 47 Part 15 Class B
Class B Notice for FCC
Note: This equipment has been tested and found to comply with the limits for a Class B digital device, pursuant to part 15 of the FCC Rules. These limits are designed to provide reasonable protection against harmful interference in a residential installation. This equipment generates, uses and can radiate radio frequency energy and, if not installed and used in accordance with the instructions, may cause harmful interference to radio communications. However, there is no guarantee that interference will not occur in a particular installation. If this equipment does cause harmful interference to radio or television reception, which can be determined by turning the equipment off and on, the user is encouraged to try to correct the interference by one or more of the following measures:
Reorient or relocate the receiving antenna.
Increase the separation between the equipment and receiver.
Connect the equipment into an outlet on a circuit different from that to which the receiver is connected.
Consult the dealer or an experienced radio/TV technician for help.
Telecom Compliance
TIA-1096-A
TIA-986-B
Contact your Cisco representative for an official signed version of the Supplier's Declaration of Conformity according to telecom standards.
Canada
Product Safety
CAN/CSA C22.2 No. 60950-1
EMC
ICES-003 / NMB-003 Class B
This Class B digital apparatus complies with Canadian ICES-003.
Cet appareil numérique de la classe B est conforme à la norme NMB-003 du Canada.
Telecom Compliance
CS-03 Part I, VI
Contact your Cisco representative for an official signed version of the Supplier's Declaration of Conformity according to telecom standards.
Other Markets
For relevant compliance information/documentation for markets not mentioned above, contact your Cisco representative.

UNIT DIMENSIONS

Height: 17.7"/45.0 cm
Width: 11.8"/30.0 cm
Depth: 2.6"/6.6 cm
Weight: 9.0 lbs/4.1 kg

* According to TIA-968-B FCC Part 68, AGC must not be disabled when this product is used in the U.S and Canada.
** Requires TMS version 9.0 or newer.
All specifications subject to change without notice, system specifics may vary.
All images in these materials are for representational purposes only, actual products may d i f f e r.
TANDBERG and Expressway are registered trademarks or trademarks of TANDBERG in the U.S. and other countries. All other trademarks are property of their respective owners.

MTBF PRODUCT RELIABILITY/MTBF

The predicted reliability is expressed in the expected random Mean Time Between Failures (MTBF) for the electronic components based on the Power On Hours:
Power On Hours (POH) > 69 000 hours
Useful Life Cycle > 6 years
ISO 9001 cer tificate is available upon request

August 2011

Technical specifications

Edge 95/75 MXP

UNIT DELIVERED COMPLETE WITH:
Wireless remote control, PrecisionHD Camera, microphone, brackets, and cables

BANDWIDTH
95 MXP:
H.320 up to 512 kbps
H.323 & SIP up to 2 Mbps
85 MXP:
H.320 up to 384 kbps
H.323 & SIP up to 1.1 Mbps
75 MXP:
H.320 up to 128 kbps
H.323 & SIP up to 768 kbps

FIREWALL TRAVERSAL
TANDBERG ExpresswayTM Technology
Auto NAT
H.460.18, H.460.19 Firewall Traversal

VIDEO STANDARDS
H.261, H.263, H.263+, H.263++ (Natural Video), H.264, H.264 RCDO

VIDEO FEATURES
Native 16:9 Widescreen
Advanced Screen Layouts
Picture in Picture (PIP)
Picture outside Picture & Large POP
Side by Side
PC Zoom
Intelligent Video Management
Simultaneous videoconference & local PC mode
Local Auto Layout

VIDEO INPUTS (5 INPUTS)
1 x 9 PinDSUB: HD Main Camera
1 x MiniDin, S-video: auxiliary/document camera
1 x RCA/Phono, composite: document camera/aux
1 x RCA/Phono, composite: VCR
1 x DVI-I: PC
Input: 800 x 600 (@ 60,72,75,85 Hz),1024 x 768 (@ 60,70,75 Hz), 1280 x 720 (HD720P) (@ 50, 60 Hz), 1280 x 1024 @ 60 Hz
Extended Display Identification Data (EDID)

VIDEO OUTPUTS (4 OUTPUTS)
1 x MiniDin, S-video: main monitor
1 x RCA/Phono, composite: main monitor or VCR
1 x RCA/Phono, composite: dual monitor or VCR
1xDVI-1/XGA: main or second monitor
XGA Output
800 x 600 @ 75 Hz, 1024 x 768 @ 60 Hz, 1280 x 768 (WXGA) @ 60 Hz, 1280 x 720 (HD720p) @ 60 Hz
VESA Monitor Power Management

VIDEO FORMAT
NTSC, PAL, VGA, SVGA, XGA, W-XGA, SXGA and HD720p

LIVE VIDEO RESOLUTIONS
NATIVE NTSC:
400p (528 x 400 pixels)
4SIF (704 x 480 pixels), Digital Clarity
Interlaced SIF (iSIF 352 x 480 pixels), Natural Video
SIF (352 x 240 pixels)
NATIVE PAL:
448p (576 x 448 pixels)
4CIF (704 x 576 pixels), Digital Clarity
Interlaced CIF (iCIF 352 x 576 pixels), Natural Video
CIF (352 x 288 pixels)
QCIF (176 x 144 pixels)
SQCIF (128 x 96 pixels) decode only
NATIVE PC RESOLUTIONS:
XGA (1024 x 768)
SVGA (800 x 600 pixels)
VGA (640 x 480 pixels)
WIDE RESOLUTIONS:
w288p (512 x 288 pixels)
w448p (768 x 448 pixels)
w576p (1024 x 576 pixels)
w720p (1280 x 720 pixels)

STILL IMAGE TRANSFER
CIF, SIF, 4CIF (H.261 Annex D), 4SIF, VGA, SVGA, XGA

AUDIO STANDARDS
G.711, G.722, G.722.1, G.728, 64 bit & 128 bit MPEG4AAC-LD

AUDIO FEATURES
CD-Quality 20KHz Mono and Stereo
Telephone add-on via MultiSite
Two separate acoustic echo cancellers
Audio mixer
Automatic Gain Control (AGC)*
Automatic Noise Reduction
Audio level meters
VCR ducking
Optional Stereo Package
Packet loss management
Active lip synchronization
GSM interference audio feature

AUDIO INPUTS (4 INPUTS)
2 x microphone, 24V phantom powered, XLR connector
1 x RCA/Phono, Line Level: auxiliary (or VCR Stereo L)
1 x RCA/Phono, Line Level: VCR/DVD (Stereo R)

AUDIO OUTPUTS (2 OUTPUTS)
1 x RCA/Phono, S/PDIF (mono/stereo) or Analogue
Line Level: main audio or Analogue Stereo L
1 x RCA/Phono, Line Level: VCR or Analogue Stereo R

FRAME RATES
30 frames per second @ 168 kbps and above
60 fields per second @ 336 kbps and above (Point-to-point)

DUAL STREAM
DuoVideo
H.239 dual stream
Dynamic bandwidth adjustment (H.323)
Available on H.323 & H.320
Available in MultiSite from any site (95 & 85 MXP only)

NETWORK FEATURES
Auto H.320/H.323 dialing
SIP
Downspeeding
Programmable network profiles
Intelligent Call Management
Maximum call length timer
Automatic SPID and line number configuration (National ISDN, GR-2941-CORE)
SoftMux
H.331 Broadcast Mode
NATO standard KG194/KIV-7 encryptor support***
URI Dialing

MULTISITE FEATURES (95 & 85 MXP ONLY)
H.323/H.320/SIP/Telephony/VoIP in the same conference
Audio and Video Transcoding
Video rate matching from 56 kbps – maximum conference rate
CP4 and Voice Switched
Best Impression (Automatic CP Layouts)
H.264, Encryption, Digital Clarity
Dual Stream from any site
ISDN & IP Downspeeding and IPLR
MultiSite (H.243) Cascading on H.320 & H.323
Unicode H.243 Terminal Names
Dial in/Dial out
Chair control for host system
Snapshot of ongoing conference (JPEG)
Snapshot of ongoing DuoVideo/H.239 presentation (JPEG)
Separate welcome page for encrypted conferences
Conference rates up to 2.3 Mbps with optional bandwidth upgrade (1.5 Mbps is standard conference rate)
Up to 4 video and 3 audio sites
4 sites @ 768 kbps (+telephone calls)
Mix ISDN-BRI and IP up to maximum conference rate
Mulitway™

EMBEDDED ENCRYPTION
H.320 and H.323 point-to-point and multipoint calls
Standards-based: H.233, H.234, H.235 v2&v3, DES and AES
NIST-validated AES
NIST-validated DES
Automatic key generation and exchange
Supported in Dual Stream & MultiSite

IP NETWORK FEATURES
IEEE 802.1x/EAP Network Authentication
H.235 Gatekeeper Authentication
DNS lookup for service configuration
Differentiated Services (DiffServ)
Resource Reservation Protocol (RSVP)
IP precedence
IP type of service (ToS)
IP adaptive bandwidth management (including flow control)
Auto Gatekeeper discovery
Dynamic playout and lip-sync buffering
Intelligent Packet Loss Recovery (IPLR)
H.245 DTMF tones in H.323
Cisco CallManager integration using ECS
IP Address Conflict Warning
Date and Time support via NTP
Call Services

IPv6 NETWORK SUPPORT
Dual Stack IPv4 and IPv6 simultaneous support
Net service support on IPv6: Telnet, SSH, HTTP, HTTPS, ftp, SNMP, DNS, NTP, DHCP"
Media support on IPv6: H.323, SIP, Streaming

SECURITY FEATURES
Management via HTTPS and SSH
IP Administration Password

Technical specifications for Edge 95/75 MXP, cont...

Menu Administration Password
Dialing Access code
Streaming password
H.243 MCU Password
VNC password
SNMP security alerts
Disable IP services
MD-5 Challenge
Network Settings protection
SIP Authentication via NTLM
SIP Authentication via Digest
FIPS Mode

NETWORK INTERFACES

4 x ISDN BRI (RJ-45), S-interface
1 x LAN/Ethernet (RJ-45) 10/100 Mbit (LAN/DSL/cable modem)
1 x PC card slot (PCMCIA) for wireless LAN
1 x X.21/V.35/RS-449 with RS-366 dialing, RS-366 Adtran IMUX, Leased Line, Data Triggered, and Manual***
1 x USB for future usage

WIRELESS LAN SUPPORT

Compliant with IEEE 802.11b, up to 11 Mbit
Support for 64/128 bit encryption (WEP)
Infrastructure or ad-hoc mode

ETHERNET/INTERNET/INTRANET CONNECTIVITY

TCP/IP, DHCP, ARP, FTP, Telnet, HTTP, HTTPS, SOAP and XML,
MD-5 Challenge
SNMP Enterprise Management
Internal web server
Internal streaming server

OTHER MAJOR STANDARDS SUPPORTED

H.231, H.233, H.234, H.235 v2&v3, H.239, H.241, H.243, H.281, BONDING (ISO 13871), H.320, H.323, H.331
RFC 3261, RFC 2237, RFC 3264, RC 3311, RFC 3550, RFC 2032, RFC 2190, RFC 2429, RFC 3407

PRECISIONHD CAMERA

7 x zoom 1/3" CMOS +10°/-20° tilt +/- 90° pan
42° vertical field of view
72° total vertical field of view
70° horizontal field of view
250° total horizontal field of view
Focus distance 0.3m-infinity
1280 x 720 pixels progressive @ 30fps
Automatic or manual focus/brightness/whitebalance
Far-end camera control
15 near and far-end camera presets
Voice-activated camera positioning
Daisy-chain support (Visca protocol camera)

CLOSED CAPTIONING/TEXT CHAT

T.140 text chat available from Telnet, Web and User Interface

PRESENTATIONS AND COLLABORATION

Natural Presenter Package including:
PC Presenter (DVI-I, SXGA In)
PC SoftPresenter
Digital Clarity & Native Formats
Advanced Video Layouts
Streaming compatible with Cisco IP/TV,
Apple QuickTime®, RealPlayer® v8, VLC Media Player etc.

SYSTEM MANAGEMENT

Support for the Cisco TelePresence Management Suite (TMS)
Total management via embedded web server, SNMP, Telnet, SSH, FTP and SOAP
Remote software upload: via web server, ftp server or ISDN
1 x RS-232 local control and diagnostics
Remote control and on-screen menu system
External Services from TMS

DIRECTORY SERVICES

Support for Local directory (My Contacts), Corporate Directory and Global Directory
Unlimited entries using Server directory** supporting LDAP and H.350
Unlimited number of entries for Corporate directory (through TMS) within a maximum of 40 directories
400 number global directory
200 number local directory
16 dedicated MultiSite entries
Received Calls with Date and Time
Directories in Local Languages
Placed Calls with Date and Time
Missed Calls with Date and Time

19 SELECTABLE MENU LANGUAGES

Arabic, Simplified Chinese, Traditional Chinese, English, French, German, Italian, Japanese, Korean, Norwegian, Portuguese, Russian, Spanish, Suomi, Swedish and Thai
Chinese, Korean, Japanese and Russian Input Method Editor

CUSTOMIZED WELCOME SCREEN AND COMPANY LOGO

Picture JPEG (logo.jpg): Recommended maximum size is 704x576 for Welcome Screen and 352x288 for Encryption Required Screen.

POWER

Auto-sensing power supply
100-250 VAC, 50-60 Hz
40 watts max.

OPERATING TEMPERATURE AND HUMIDITY

0° C to 35° C (32° F to 95° F) ambient temperature
10% to 90% Relative Humidity (RH)

STORAGE AND TRANSPORT TEMPERATURE

-20° C to 60° C (-4° F to 140° F) at RH 10-90% (non-condensing)

APPROVALS

EU/EEC
Directive
1999/5/EC (R&TTE)
Contact your Cisco representative for an official signed version of the EC Declaration of Conformity.
Product Safety
Standard EN 60950-1
EMC
Standard EN 55022, Class A
Standard EN 55024
Standard EN 61000-3-2/-3-3
Class A Warning for EU/EEC:
This is a Class A product. In a domestic environment this product may cause radio interference, in which case the user may be required to take adequate measures.
Telecom Compliance
TBR3
USA
Product Safety
Approved according to UL 60950-1
EMC
FCC CFR 47 Part 15 Class A
Class A Notice for FCC:
This equipment has been tested and found to comply with the limits for a Class A digital device, pursuant to Part 15 of the FCC Rules. These limits are designed to provide reasonable protection against harmful interference when the equipment is operated in a commercial environment. This equipment generates, uses, and can radiate radio frequency energy and, if not installed and used in accordance with the instruction manual, may cause harmful interference to radio communications.
Operation of this equipment in a residential area is likely to cause harmful interference in which case users will be required to correct the interference at their own expense.
Telecom Compliance
TIA-1096-A
TIA-986-B
Contact your Cisco representative for an official signed version of the Supplier's Declaration of Conformity according to telecom standards.
Canada
Product Safety
CAN/CSA C22.2 No. 60950-1
EMC
ICES-003 / NMB-003 Class A
Class A Notice for Canada:
This Class A digital apparatus complies with Canadian ICES-003.
Cet appareil numérique de la classe A est conforme à la norme NMB-003 du Canada.
Telecom Compliance
CS-03 Part I, VI
Contact your Cisco representative for an official signed version of the Supplier's Declaration of Conformity according to telecom standards.
Other Markets
For relevant compliance information/documentation for markets not mentioned above, contact your Cisco representative.

DIMENSIONS

Codec
Height: 16.9"/42.9cm
Width (including footstand): 5.7"/14.5cm
Depth (including footstand): 9.0"/22.8cm
Weight: 7.7 lbs/3.5 kg
Camera
Height: 5.4"/13.7cm
Width: 8.7"/22.2cm
Depth: 5.7"/14.5cm
Weight: 3.53 lbs/1.6 kg

* According to TIA-968-B FCC Part 68, AGC must not be disabled when this product is used in the U.S and Canada.
** Requires TMS version 9.0 or newer.
*** Optional equipment, must be specified at the time of order, Serial Por t replaces ISDN BRI.
All specifications subject to change without notice, system specifics may vary.
All images in these materials are for representational purposes only, actual products may d i f f e r.
TANDBERG and Expressway are registered trademarks or trademarks of TANDBERG in the U.S. and other countries. All other trademarks are property of their respective owners.

MTBF PRODUCT RELIABILITY/MTBF

The predicted reliability is expressed in the expected random Mean Time Between Failures (MTBF) for the electronic components based on the Power On Hours:
Power On Hours (POH) > 69 000 hours
Useful Life Cycle > 6 years
ISO 9001 cer tificate is available upon request

August 2011

Glossary

199 AV1: External input for the TANDBERG/LOEWE monitor.

2nd monitor: The second monitor of your video communication system. The second monitor is normally placed on the right side of the first monitor.

4CIF: 4 times CIF, 704x576 pixels

4SIF: 4 times SIF, 704x480 pixels

A

AACLD: Advanced Audio Coding Low Delay

Access code: Use Access code to password protect outgoing calls.

Accessories box: The cabinet contains the following: W.A.V.E. camera, table microphone, remote control and tracker and documentation.

Accessories drawer: See Accessories box

AES: Strong encryption. (Advanced Encryption Standard)

AGC: Automatic Gain Control. Maintains the audio signal level at a fixed value by attenuating strong signals and amplifying weak signals. Very weak signals, i.e. noise alone, will not be amplified.

Alert speaker: The internal speaker will warn you of an incoming call even though the monitor may not be switched on.

Audio call: Audio call equals a telephone call. You can make a call with the video system with audio only.

Audio input 4: Intended for connection to an external microphone amplifier or an external fixed mixer.

Audio input 5: Intended for connection to external playback devices (or to telephone add-on hybrids).

Audio input 6: Intended for connection to a VCR or DVD player or other external playback devices.

Audio out 1: Intended for connection to TANDBERG Natural Audio, televisions or audio amplifiers.

Audio out 2: Intended for connection to audio recording equipment (or to a telephone add-on hybrid).

Audio out 3: Intended for connection to a VCR or other recording equipment.

Auto-display snapshot: Sent and received snapshot will automatically appear on full screen display.

Auto answer: The system will automatically answer all incoming calls when idle.

Automatic DuoVideo: DuoVideo Mode is put to Auto. When starting a presentation, DuoVideo will start automatically (if possible).

B

Bandwidth: Decides the quality of the video call. High bandwidth gives high quality.

C

Call Control Data Triggered: Uses TxData, RxData and clock signals only. Use Data Triggered when no handshake signal is available.

Call control Leased Line: Is a non-dialing protocol and should be used when two systems are connected in a point-to-point connection. Use Leased Line when the handshaking signals DTR and CD are available.

Call control Manual: Should be used when no handshake signals are available, and the external equipment requires a constantly connected line.

Call control RS366 Dialing: The only dialing protocol and would normally be used together with network clocking RS449/V35 Compatible when the external system uses RS2366 ports.

Call status: Comprehensive information about the call listing transmitted and received audio/video/data information.

Camera tracking: Voice Activated Camera Positioning - the camera will automatically view the current speaker.

Camera tracking mode: Voice Activated Camera Positioning - the camera will automatically view the current speaker.

Chair control: Enables one participant to control the meeting by selecting which of the conference participants that is to be broadcasted to the other participants.

Channel status: Comprehensive information about the call progress listing the numbers called, and if an error occurs a cause code is displayed.

CIF: Common Intermediate Format, 352x288 pixels

Closed Captioning: Text chat.

Codec: The Codec is the heart of the system. The main task for the Codec is the compression of outgoing video, audio and data, the transmission of this information to the far end, and the decompression of the incoming information.

Continuous Presence: See Split Screen

Control Panel: The Control Panel is found in the Menu.

CSU: Channel Service Unit

D

Daisy-chaining: Use of several cameras in a video conference.

Dataport: The system provides two standard RS 232 data ports to allow a computer to be connected for data transfer and control purposes.

Dataport 1: A standard RS 232 data port to allow a computer to be connected for data transfer and control purposes.

Dataport 2: Dedicated to the main camera and will not be available in standard configuration.

DES: Encryption. (Data Encryption Standard)

DHCP: Dynamic Host Configuration Protocol.

Diagnostics: Allows testing of individual system components and displays the current system settings.

Digital ClarityTF: Participants enjoy presentations of exceptionally high quality resolution video.

Disconnect site: As a Chairman, you get the option Disconnect site. Disconnect site allows you to disconnect any participant in the conference.

Do Not Disturb: When Do Not Disturb is active the system will not accept any incoming calls.

Document Camera: A document camera is an additional camera that is used for showing text, diagrams as well as physical objects.

DownspeedingTF: If channels are dropped during a video meeting, the connection is automatically maintained without interruption.

Dual monitor: The second monitor

Dual monitor system: A video conference system with two monitors.

DuoVideoTF: Allows participants at the far end to simultaneously watch a presenter on one screen and a live presentation on the adjoining screen.

E

E.164 Alias: The E.164 address of the system. Equivalent to a telephone number, sometimes combined with access codes. The system will not register with the Gatekeeper if the E164 alias is not set.

E1: Network type, 30 channels. Default for PAL versions.

Echo canceller: Continuously adjusts itself to the audio characteristics of the room and compensates for any changes it detects in the audio environment.

Echo control: When set to On the far end is prevented to hear

Glossary, continued...

their own audio.

Encryption: Use encryption to make secure calls with DES (encryption) or AES (strong encryption).

End view: Stop viewing the site previously chosen with View Site, and return the view to the site that is currently On Air. Can be used by all conference participants.

Ethernet Speed: The speed (Mbps) on the connection from the system to the LAN.

F

Fallback to telephony: Enables fallback from video calls to telephony/speech calls.

Far End: In a video conference, Far End means the remote side of the conference. Far End Camera is your conference partner's camera. Opposite to Near End

FECC: Far End Camera Control. When activated it is possible to control the far end's camera, select video sources, activate presets and request still images.

Floor: In a multipoint call, use Request Floor to broadcast your picture to all other participants. This is handy when you are having presentations, for teachers etc.

G

G.711: Audio algorithm for normal quality audio (telephone quality, 3.1 kHz) The system will always have G.711 enabled.

G.722: Audio algorithm for high quality audio (7 kHz).

G.722.1: Audio algorithm for compressed high quality audio (7 kHz)

G.728: Audio algorithm for compressed normal quality audio (telephone quality, 3.1 kHz)

Gateway: The gateway enables sites on IP and sites on ISDN to participate in meetings with each other.

Global Phone Book: A phone book provided by TMS.

H

H.261: Video algorithm for legacy video compression and decompression. The system will always transmit H.261

H.263: Video algorithm for normal video compression and decompression

H.264: Video algorithm for bandwidth-efficient video compression and decompression

Hardware serial number: A unique number (listed in the System Information menu) to identify your system towards your Cisco representatives.

Humfilter: A high pass filter which reduces very low frequency noise.

I

iCIF: Interlaced CIF, 352x288 pixels, 50 fields per second

Incoming call: Someone calls in to your system

Incoming MCU Calls: If occupied in a call, the system will provide a visual/audio indication of an incoming call and ask to accept or reject the call.

IP address: Defines the network address of the system. This address is only used in static mode.

IP assignment: IP-address, IP-subnet mask and Gateway are assigned by the DHCP server.

IP assignment static: The system's IP-address and IP-subnet mask must be specified in the IP-address field.

IP Precedence: Used to define which priority the system should have in the network. Higher numbers indicate higher priority.

IP subnet mask: Defines the type of network. This address is only used in static mode.

IP ToS: IP Type Of Service. Helps a router select a router path when multiple paths are available.

iSIF: Interlaced SIF, 352x240 pixels, 60 fields per second

L

Layout: Use the Layout key to change picture layout on the screen.

M

Main Camera: Your camera. Video input 1

Max call length: This feature will automatically end both incoming and outgoing calls when the call time exceeds the length specified.

Max channels: Indicates the maximum number of channels the system is allowed to use on the E1/T1 interface.

MCU: Multipoint Conference Unit.

MCU status line: Shows indicators for MultiSite, MCU and DuoVideo

MicOff: Microphone is switched off.

Mix mode: How to adjust the weighting of each microphone to obtain the best possible audio and minimize the background noise.

Modem mode: (Dataport) Supports external control of the system via a PC as in Control Mode. Once a call is established, Dataport 1 will automatically switch to Data mode. When the call disconnects, Dataport 1 switches back to Control Mode.

MSN: Multiple Subscriber Number. Possible to attach different ISDN terminals, with different numbers, to the same physical ISDN telephone line. The service can be ordered from the telephone company.

Multipoint call: A call with more than two participants including yourself

MultiSite: The Cisco systems internal MCU. Built-in system which makes it possible to establish meetings with up to 6 video calls and 5 telephone calls. The MultiSite option is not available on all systems.

MultiSite cascading: By connecting up to 4 or 6 (depending on the system capacity) MultiSite systems together to achieve a higher number of participants in a multipoint call.

N

NAT: Network Address Translation. NAT support in the video communication system enables proper exchange of audio/video data when connected to an external video system when the IP traffic goes through a NAT router. Used in small LANs, often home offices, when a PC and a video communication system is connected to a router with NAT support.

NAT Address: The external/global IP-address to the router with NAT support. Packets sent to the router will then be routed to the system's IP address.

Natural Audio ModuleTM: Designed to improve audio quality during a video conference. It is mounted in the cabinet above the Codec and consists of an audio system optimized for speech.

Natural Presenter Package: Consists of DuoVideo, Digital Clarity and PC Presenter.

Near End: In a video conference, Near End means your own side of the conference. Near Camera is your own camera. Opposite to Far End

Network clocking: Specifies the number of physical external clock signals.

Network Interface: Indicates if the network is of type E1 or T1.

Network profiles: It is possible to define up to 6 network profiles, each consisting of name and call prefix, and three of them also include network selection.

Non Standard Facility: The network provider may require

Glossary, continued...

service selection in your ISDN configuration. Valid NSF codes are from 1 to 31. 0 will disable NSF service codes.

NR: Noise Reduction. Reduces constant background noise (e.g. noise from air-conditioning systems, cooling fans, etc.).

NSF: Non Standard Facility.

NTSC: National Television System Committee. Video standard corresponding to 4SIF. Primary used in USA, Japan and other countries.

O

Option Key: Required by the system to activate optional features such as MultiSite and Presenter.

P

PAL: Phase Alternation by Line. Video standard corresponding to 4CIF. Primary used in Europe, Middle East and Asia

Parallel dial: Channels will be dialed and connected in parallel when setting up a bonding call.

PC PresenterTF: An easily accessible PC connection plug. When connected the PC image is displayed on the monitor.

PC SoftPresenterTF: Shows PC images via the LAN connection.

PIP: Picture-In-Picture

Point-to-point call: A call with two participants including your self

POP: Picture Outside Picture. POP is a picture layout mode that is optimized for wide screens: Full screen, 1+3 layout and emulated dual monitor layout.

PrecisionHD Camera: High Definition camera – delivers high resolution quality video

Presentation: Use the Presentation key to show another video source from a predefined presentation source. Select Presentation from the menu to choose among all available video sources.

Presentation source: The video source that is on display when you press the Presentation Key on the remote control

Presets: Predefined camera positions (and video sources)

Q

QCIF: Quarter CIF, 176x144 pixels

QSIF: Quarter SIF, 176x120 pixels

R

Release Floor: To end the request floor function.

Release floor to site: Allows the chairman to release the floor.

Remote: Short for Remote Control

Request Floor: The MCU will broadcast the video in full screen to all other participants in the conference. If the MCU conference has a chairman, a request will be sent to the chairman.

Restart: Restarts the system.

Restore defaults: Restores system settings to the factory defaults.

Restricted call: A call to a 56 kbps network. By default the system will dial an unrestricted call (a call to a 64 kbps network) and downspeed to 56 kbps if necessary.

S

S-VHS: S-video

S-video: The standard camera uses one of the S-video inputs in the codec.

Selfview: Outgoing video. In most cases, the image of your self.

Serial number: A unique number (the hardware serial number, listed in the System Information menu) to identify your system towards your Cisco representatives.

Side-by-Side: Side-by-side view means that two pictures are displayed side by side each other on the screen. You will se two equally sized pictures.

SIF: Standard Input Format, 352x240 pixels

SNMP: Simple Network Management Protocol.

SNMP Community: SNMP Community names are used to authenticate SNMP requests. SNMP requests must have a password in order to receive a response from the SNMP agent in the system. The SNMP Community name is case sensitive.

SNMP Trap Host: Identifies the IP-address of the SNMP manager.

SNMP traps: Generated by the agent to inform the manager about important events.

SoftMux: Ensures high reliability and includes the unique Downspeeding feature. It also makes it possible to dial to another video communication equipment, phones and mobile phones in a uniform way, and provides an on-screen, real-time feedback on the progress of a call.

Split Screen: All the participants in a MultiSite conference are displayed on the screen. (Former Continuous Presence)

Start Channel: Indicates the firstE1/T1 channel the system is allowed to use. The setting might be used when if the E1/T1 line is shared with other equipment.

Start up video source: The video source that is on display when the system wakes up from standby mode.

Status Format: Provides call quality feedback on the status line.

Streaming: Allows broadcasting of audio/video via an IP network.

Streaming Address: Defined as the IP-address of a streaming client, streaming server or a multicast address.

Streaming Address Port: If several codecs are streaming to the same IP-address, different ports have to be used in order for the client to know which stream to receive.

Streaming Allow remote Start: Streaming can be started from the Video communication system using the remote control, by using the Data port, or from external user interfaces like the Web-browser or Telnet session.

Streaming Announcements: The system will announce to the network that it is streaming. This enables a streaming client (e.g. a PC) to connect to the system's streaming session. Used by Cisco IP/TV.

Streaming Password: Prevents unauthorized access to the streaming functionality.

Streaming Source: Select between local video and/or far end video to be streamed. Local and far end audio is always streamed.

Streaming TTL/Router Hops: Used for streaming data to limit how many routers the data should pass before it is rejected.

Streaming Video Rate: Defines the Video streaming rate from the system.

SVGA: Super VGA. (800x600)

SXGA: Super extended Graphics Array (1280x1024)

System information: Lists system numbers, line status, software version and other useful information.

System name: Identifies a video communication system

T

T1: Network type, 24 channels. Default for NTSC versions.

T1 Line Coding: Indicates how the signals on the line should be coded. If parts of the systems use restricted coding, this should be selected.

Take chair: Request chairmanship of the conference. If no one else is chairman, the request is granted.

TCS-4: Used to address different systems on a LAN when dialing in via a gateway.

Glossary, continued...

Terminal Names: Lists the site numbers or name (if supported) of other sites connected in the conference.

Terminate meeting: The chairman can terminate the conference, i.e. all participants are disconnected.

TMS: Cisco TelePresence Management Suite

Touch Tones: To dial extension numbers etc. during a call, use touch tones in order to get tones instead of preset on the number keys.

Tracker: The tracker is a small infrared remote control device made to steer the camera to any desired location within the room.

TSC-1: TCS-1 is used for H243 password on H320 MCU's

V

VCR: Video Cassette Recorder

VGA: Video Graphics Array. (640 x 480)

VGA Out Quality: Changes the resolution of the VGA signal available in the VGA Out connector at the rear of the codec.

View Settings: Displays all the system settings in a read only format.

View site: View any participant in the conference other than the participant currently On Air. Can be used by all conference participants.

VNC: Virtual Network Computing.

Voice Switched: The active site will be displayed in full screen during a MultiSite conference.

W

WAVE II Camera: Wide Angle View Camera - delivers the widest angle of view in the industry.

Welcome menu: The welcome menu displays the Menu when you are outside a call.

X

XGA: Extended Graphics Array (1024 x 768)

On our web site you will find an overview of the worldwide Cisco contacts.
Go to: http://www.cisco.com/web/siteassets/contacts

Corporate Headquarters
Cisco Systems, Inc.
170 West Tasman Dr.
San Jose, CA 95134 USA