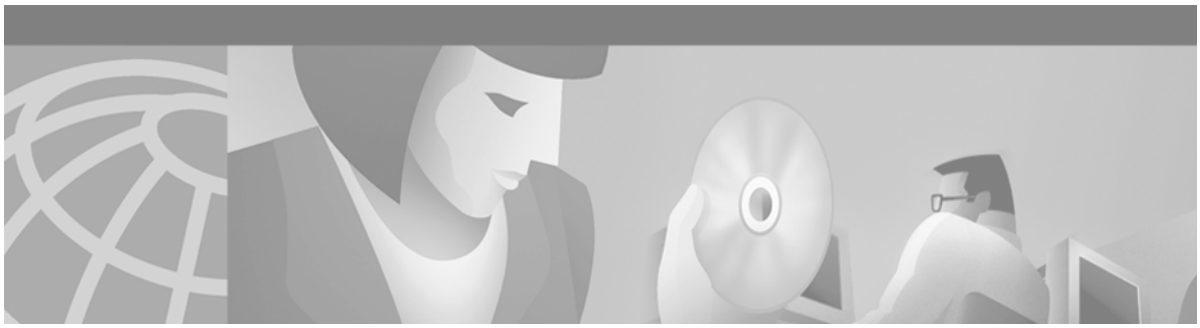

Cisco 11500 Series Content Services Switch Gigabit Ethernet Module Reference

The CSS 11500 series Gigabit Ethernet module (GEM) contains two 1000-Mbps Ethernet ports. These ports are small-form factor pluggable gigabit interface converters (SFP GBICs) with LC-type connectors, long- or short-wave. Each connector has a Link LED to indicate its network status. The Status LED indicates the state of the module itself. Figure 1 shows a GEM (CSS5-IOM-2GE=).

Figure 1 2-Port Gigabit Ethernet Module

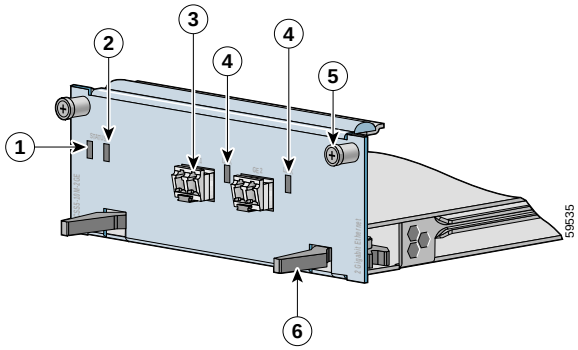

1	Bicolor status LED (green and red)	**4**	Link and activity LEDs (next to its corresponding SFP GBIC)
2	Amber status LED	**5**	Spring-loaded screws (one of two)
3	LC-type SFP GBIC (one of two)	**6**	Ejectors (one of two)

Note Before you remove or install a module, make sure you properly ground yourself prior to handling the module. For example, wear an antistatic wrist strap (included in the kit with the module) and stick the copper-tape end of the strap to an unpainted metal surface on the chassis. Make sure that the wrist strap makes good contact with your skin.

Corporate Headquarters:
Cisco Systems, Inc., 170 West Tasman Drive, San Jose, CA 95134-1706 USA

Removing the GEM

Caution You must power down the CSS to remove or install a GEM. If you remove a powered-on GEM from an operational CSS, the CSS terminates all communications and reboots.

To remove a GEM (refer to Figure 1):

1. Locate the failed module (its Status LEDs will be off). Use the **show chassis** command to verify that the module is powered off.
2. If necessary, power down the CSS.
3. Remove all cables from the module.
4. Using a Phillips screwdriver, loosen the spring-loaded screws on the front of the module faceplate.
5. Extend both ejectors simultaneously to unseat the module connector from the backplane and slide the module out of the slot.
6. Remove the SFP GBICs from the GEM and set them aside.

Note The replacement GEM contains a 144 MB Small Outline RamBus Inline Memory Module (SO-RIMM). If your failed module has a 288 MB SO-RIMM, you must remove its SO-RIMM, and place it in the replacement GEM. See "Removing and Replacing the Memory Module" later in this document.

Installing the GEM

To install an additional or replacement GEM (refer to Figure 1):

1. Properly ground yourself prior to handling the module, as noted on the previous page.
2. Install the SFP GBICs in the connectors on the GEM.
3. If you are upgrading the CSS by adding a GEM, locate an open slot in the chassis. GEMs are restricted to slots 2 and 3 in a CSS 11503, and slots 2 through 6 in a CSS 11506. If necessary, remove a blank panel from the chassis to expose a slot for the module.
4. Insert the module into the board guides at the left and right sides of the slot, and then slide the module into the chassis by pressing firmly at the left and right of the faceplate.
5. Close both ejectors simultaneously to seat the module connector into the backplane.
6. Using a Phillips screwdriver, tighten the spring-loaded screws on the front of the module faceplate.
7. Reboot the CSS. Install the LC-type connector fiber cables.

Table 1 describes the LEDs on the GEM and their possible states.

Table 1 Gigabit Ethernet Module LED Descriptions

LED Name	Color	State	Indicates
Status (left)	Green	Solid	The module is ready.
	Red	Solid	The module failed the power-up self test during the boot process.
		Slow blink	The module failed.
	No color	Off	The module failed and has no power.
Status (right)	Amber	Slow blink	The module is offline and active.
		Solid	The module is online and not active.
Link	Green	Off	There is no link.
		On	The link exists and synchronization is achieved.
		Blinking	The link is established with transmit and receive activity.

Related CLI Commands

To view the current state of the GEM and verify it is powered on, use the **show chassis** command.

Removing and Replacing the Memory Module

To remove and replace a memory module:

1. Place the GEM face up on a flat antistatic surface.
2. Locate the SO-RIMM connector on the rear of the module. See Figure 2.

Figure 2 Memory Module Location

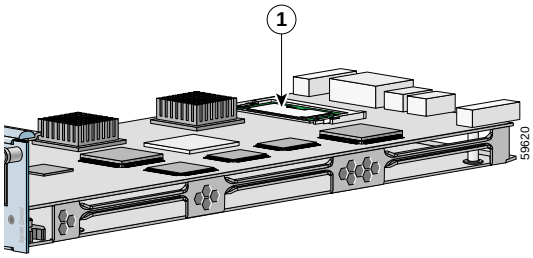

1	Memory module

3. Slightly extend the locking tabs on both sides of the memory module to release it. Gently pull the memory module out of the connector. See Figure 3.

Figure 3 Memory Replacement

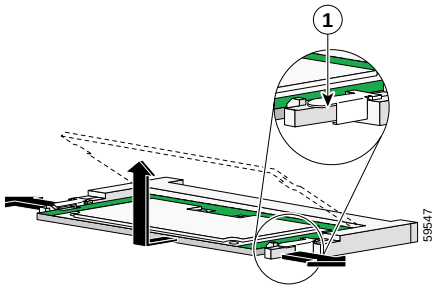

1	SO-RIMM connector tab

4. Align the replacement memory module so that the row of gold contacts on the memory module are facing the row of gold pins inside the connector.
5. Insert the memory module into the connector at approximately a 30 degree angle (see Figure 3) and, with gentle pressure, push the memory module into the connector until the module fits snugly against the back of the connector. At this point, the memory module is still at an angle *above* the locking tabs.
6. Gently push straight down on the edges of the memory module until the tabs lock it into place.