Gigabit Interface Converters (GBICs) Reference

Product Number: CSS8-GBIC-SX

Gigabit Interface Converters (GBICs) provide 1000 Mbps Ethernet connections for:

- The Gigabit Ethernet Module (GEM) in a CSS 11800. The GEM supports up to four GBICs.
- The Gigabit Ethernet Network Interface Card (GENIC) installed in a CSS 11050 and a CSS 11150. The CSS 11050 GENIC supports one GBIC. The CSS 11150 GENIC supports two GBICs.

CSS 11050 Front Panel

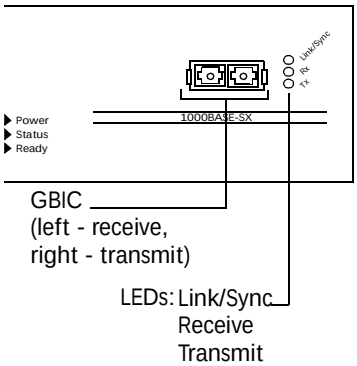

CSS 11150 Front Panel

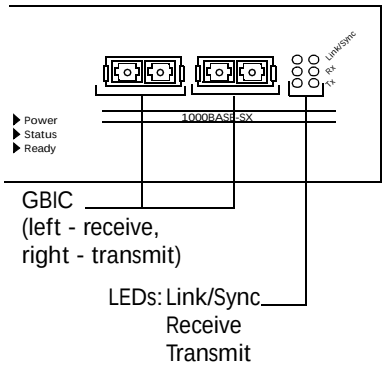

CSS 11800 GEM

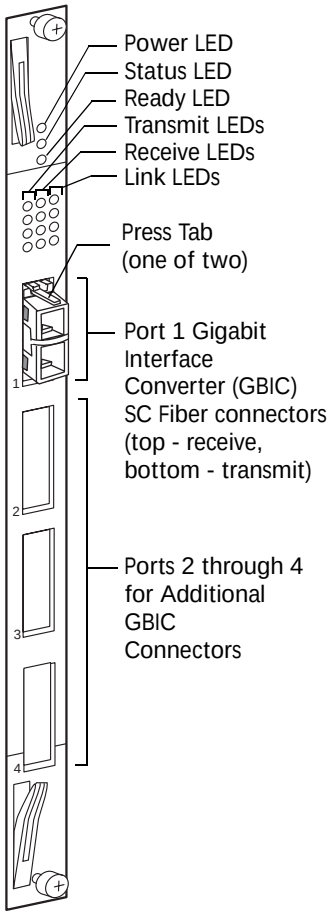

The GBIC interfaces comply with Revision 5.1 of the GBIC specification for Class 4 GBICs. The GBIC network interfaces comply with the IEEE 1000BASE-SX specification for short wavelength lasers. Each GBIC network interface laser wavelength is 850 nm and uses SC-type fiber connectors.

Installing and Removing a GBIC

Note: You can install or remove a GBIC while the CSS is running.

To install an GBIC:

1. Insert the receive and transmit cables in the connectors of the new GBIC. With the GBIC label positioned on top, insert the receive cable connector in the left port and the transmit cable connector in the right port.
2. Insert the GBIC:
   - In a CSS 11800 GEM port with the GBIC label positioned to the right.
   - In a CSS 11050 or CSS 11150 GENIC port with the GBIC label positioned on top.

   Note that the GBIC is keyed so that it can only be installed one way.

To remove the GBIC from a GEM or GENIC port:

1. Squeeze the GBIC press tabs, one on either side of the receive and transmit connectors, and slide the GBIC out of the port.
2. Remove the receive and transmit cable connectors from the GBIC.

Using the GEM or GENIC LEDs

Each GEM contains Power, Status, and Ready LEDs for module status and transmit (TX), receive (RX), and Link/Sync LEDs for each of the four ports. The GENIC has transmit (TX), receive (RX), and Link/Sync LEDs for each port. Refer to these LEDs for the current status of the the GBIC.

Table 1. Gigabit Ethernet Module LED Descriptions

LED Name	Color	Status	Indicates
Power (GEM only)	Green	Off	Module does not have power
		On	Module has power
Status (GEM only)	Yellow	Off	Module is operational
		On	Module is experiencing an error
Ready (GEM only)	Green	Off	Module not initialized
		On	Module initialized and ready
Tx (Transmit)	Green	Off	No transmit packet activity
		Blinking	Transmit activity detected
Rx (Receive)	Green	Off	No receive packet activity
		Blinking	Receive activity detected
Link/Sync	Green	Off	No link
		On	Link exists and synchronization achieved
		Blinking	Link exists but not synchronized

Related CLI Commands

To view the current state of the GENIC and verify it is online, use the **show chassis** command.

To view the current state of the GEM and verify it is online, use the **show chassis** *slot_number* command.

If the Gigabit link does not come up in auto-negotiation mode, you need to force the module and its link partner into a specific mode by using the interface mode **phy** command. This command sets the duplex and the pause flow control method for a Gigabit Ethernet interface (port). The pause method determines how link partners send pause frames. The link partners send pause frames when they become overwhelmed with data. The CSS module and its link partner must be configured with the same duplex and flow control method.

The syntax and options for the **phy** command are:

- **phy 1Gbits-FD-asym** to set the GEM port to full duplex mode with asymmetric pause toward the link partner
- **phy 1Gbits-FD-no pause** to set the GEM port to full duplex mode with no pause
- **phy 1Gbits-FD-sym** to set the GEM port to full duplex mode with symmetric pause
- **phy 1Gbits-FD-sym-asym** to set the GEM port to full duplex mode with asymmetric and symmetric pause toward the local device