Scientific Atlanta

GainMaker®
High Gain Dual System Amplifier
1 GHz with 65/86 MHz Split

Description

The GainMaker® Broadband Amplifier Platform includes a variety of RF amplifiers that address the divergent needs of today's broadband networks. All GainMaker amplifiers provide superior 2-way performance and reliability combined with a user-friendly layout. All share common plug-in accessories and now perform to 1 GHz in the forward path. The System Amplifiers in this family provide multiple forward RF output ports while the Line Extenders provide a single forward RF output port.

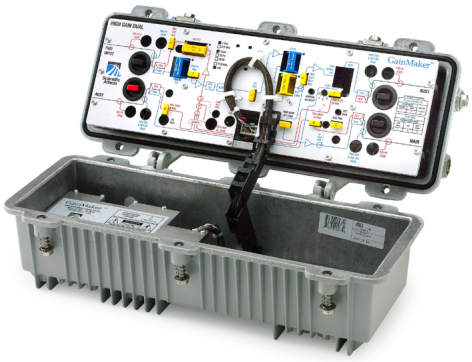

GainMaker System Amplifiers utilize GaAsFET technology in the interstage and output gain stages for improved distortion performance.

The GainMaker System Amplifier modules have increased gain and are mechanically compatible with previous System Amplifier II, II+, and III housing bases, often enabling upgrade to higher bandwidth with no re-spacing or re-splicing. The DC power supply is modular and located in an updated housing lid for easy access. All GainMaker System Amplifier modules are factory configured with reverse amplifier, diplex filters, thermal compensation circuit, forward interstage pads, and equalizer to ensure optimal performance. Optional single-pilot Automatic Gain Control (AGC) configurations are also available.

The GainMaker High Gain Dual (HGD) System Amplifier is ideally suited for providing high (bridger) level RF to the feeder network. It provides two forward RF outputs (Main and Auxiliary), with the option to create a third RF output via use of an optional plug-in Auxiliary path signal director.

Features

- Common RF test points for forward output and reverse injection simplify reverse balancing
- Increased forward gain to facilitate drop-in bandwidth extensions without re-spacing
- High-performance GaAsFET gain stage technology
- Fixed-value, plug-in accessories are common to all GainMaker products
- 60 and 90 volt AC powering capability
- 15 ampere current capacity (steady state) and 25 ampere surge survivability
- Optional 3-state reverse switch (on/off/-6 dB) allows each reverse input to be isolated for noise and ingress troubleshooting (status monitoring required)
- AGC has Thermal backup, which eliminates disruptive RF output variation in the event of pilot loss
- Improved hum modulation
- Plug-in, self-contained diplex filters
- Modular high-efficiency power supply allows simplified maintenance
- Reverse input pad and RF test point for each reverse input port allow optimum reverse path design and alignment
- Directional Coupler RF test points provide best accuracy
- Surge resistant circuitry ensures gain stage protection without fuses or other nuisance failure causing devices

ROSA™ SUPPORTED

Manage your network with ROSA and TNCS open standards element management. Get faster mean-time-to-repair, increased uptime, and management that evolves as you provision your networks. US toll-free 1-800-722-2009. EMEA +32 56 445 445. www.scientificatlanta.com/ROSA

GainMaker® - High Gain Dual - 5-65/86-1002 MHz

Block Diagram

GainMaker
HGD

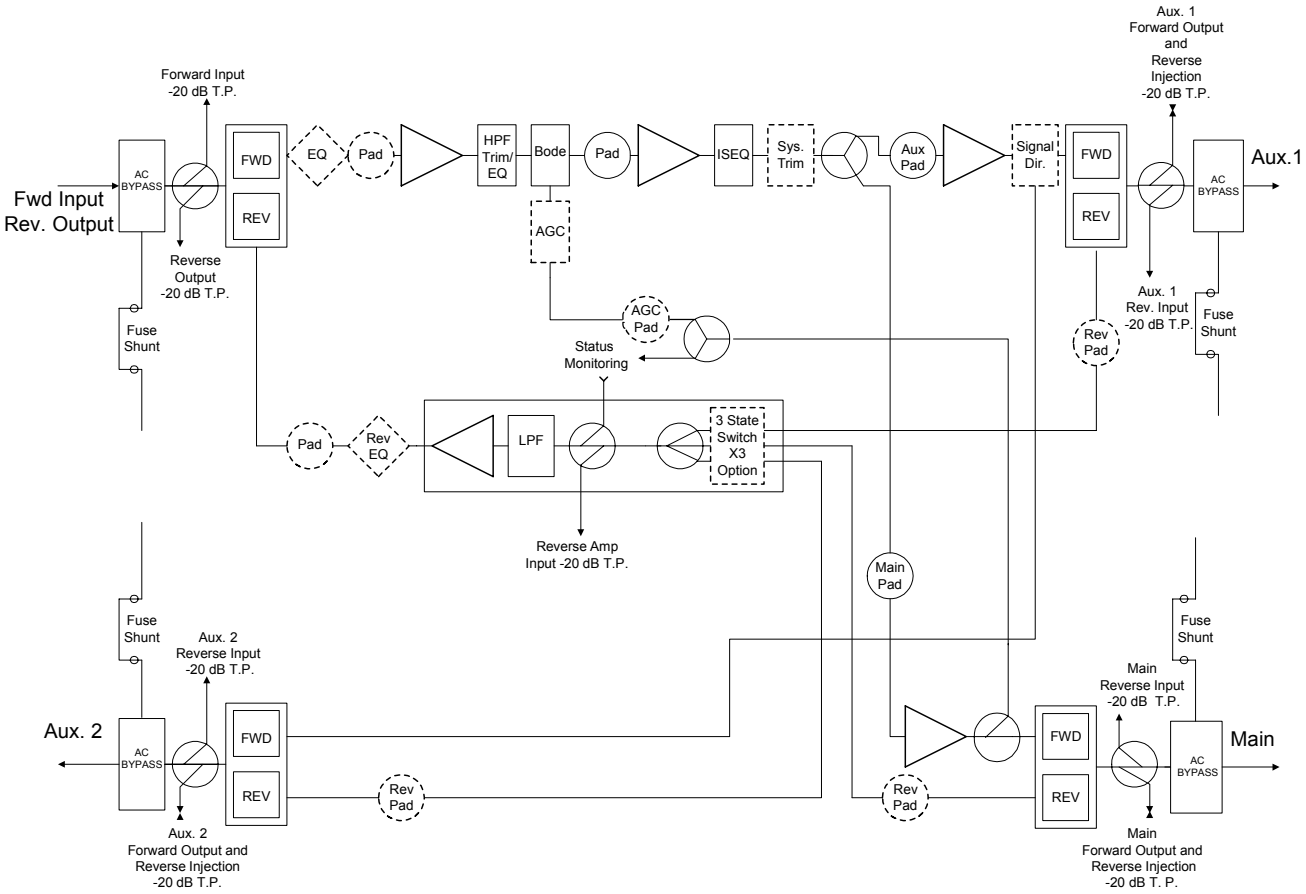

GainMaker® - High Gain Dual - 5-65/86-1002 MHz

Specifications

General Station Performance	Units	Forward	Reverse	Notes
Pass Band	MHz	86-1002	5-65	
Amplifier Type	---	GaAs FET	PP	
Frequency Response	dB	±0.5	±0.4	
Auto Slope and Gain Range	dB	±5.5	n/a	
Return Loss	dB	16	16	7
Max AC Through Current (continuous)	Amps	15	-	
Max AC Through Current (surge)	Amps	25	-	
Hum Modulation @ 12 A (over specified frequency range)	dB	70 (86-870 MHz) 60 (870-1002 MHz)	60 (5-10 MHz) 70 (11-65 MHz)	
Hum Modulation @ 15 A (over specified frequency range)	dB	65 (86-870 MHz) 60 (870-1002 MHz)	60 (5-10 MHz) 65 (11-65 MHz)	
Test Points (± 0.5 dB)	dB	-20	-20	
Reference Output Level @… 1002 MHz	dBmV	49.5	35 (@ 55 MHz)	
870 MHz		47.5		
750 MHz		45.7		
650 MHz		44.0		
550 MHz		42.5		
86 MHz		35.5	35 (@ 5 MHz)	
Reference Output Tilt (86-1002 MHz)	dB	14.0	-	1

Forward Station Performance	Units	Auto/Thermal with 10.5 dB I/S EQ	Notes
Operational Gain (minimum)	dB	43	2
Internal Tilt (± 0.5 dB)	dB	14.3	3
Noise Figure @ 86 MHz	dB	8.5	2
Noise Figure @ 1002 MHz	dB	8.0	2
64 PAL B/G Channels (CW) with digital			4
Composite Triple Beat	dB	81	
Cross Modulation	dB	73	5
Composite Second Order (high side)	dB	70	
64 PAL I Channels (CW) with digital			10
Composite Beat	dB	74	8
Cross Modulation	dB	72	5
42 CENELEC Channels (CW)			9
Composite Triple Beat	dBuV	113.5	
Cross Modulation	dBuV	112.5	5
Composite Second Order	dBuV	115	
78 NTSC Channels (CW) with digital			11
Composite Triple Beat	dB	80	
Cross Modulation	dB	72	5
Composite Second Order (high side)	dB	70	

Reverse Station Performance	Units		Notes
Operational Gain (minimum)	dB	19.5	6,7
Internal Tilt (± 0.5 dB)	dB	0	3
Noise Figure	dB	12	6,7
6 NTSC Channels (CW)			
Composite Triple Beat	dB	92	9
Cross Modulation	dB	80	5,9
Composite Second Order (high side)	dB	82	9

Unless otherwise noted, specifications reflect typical performance and are referenced to 68°F (20°C). Specifications are based upon measurements made in accordance with SCTE/ANSI standards (where applicable), using standard frequency assignments.

GainMaker® - High Gain Dual - 5-65/86-1002 MHz

Specifications, continued

Station Delay Characteristics			
Forward (Chrominance to Luminance Delay)		**Reverse** (Group Delay in 1.5 MHz bandwidth)	
Frequency (MHz)	**Delay (ns)**	**Frequency (MHz)**	**Delay (ns)**
112.25 - 116.68	4	5.0 - 6.5	60
119.25 - 123.68	3	6.5 - 8.0	22
126.25 - 130.68	3	8.0 - 9.5	12
		60.5 - 62.0	10
		62.0 - 63.5	13
		63.5 - 65.0	19

Station Powering Data														
GainMaker High Gain Dual	**I_{DC} (Amps)**		**AC Voltage**											
			90	**85**	**80**	**75**	**70**	**65**	**60**	**55**	**50**	**45**	**40**	**35**
Thermal	1.51	AC Current (A)	0.69	0.69	0.66	0.67	0.66	0.68	0.77	0.83	0.89	0.99	1.11	1.31
		Power (W)	41.2	41.1	41.0	40.8	40.7	40.7	40.6	40.6	40.6	40.5	40.6	40.8
AGC	1.56	AC Current (A)	0.70	0.70	0.68	0.69	0.68	0.70	0.79	0.85	0.92	1.02	1.16	1.35
		Power (W)	42.5	42.4	42.3	42.2	42.0	42.0	41.9	41.9	41.9	41.9	42.0	42.2
AGC with Status Mon. & Reverse Switch	1.70	AC Current (A)	0.73	0.73	0.72	0.73	0.73	0.77	0.86	0.92	1.01	1.12	1.27	1.46
		Power (W)	46.2	46.1	46.0	45.9	45.8	45.7	45.6	45.6	45.6	45.6	45.8	46.0

Data is based on stations configured for 2-way operation. AC currents specified are based on measurements made with typical CATV type ferro-resonant AC power supply (quasi-square wave), and standard GainMaker System Amplifier power supply (2.2 amp, 24 V DC, pn 734771).

DC supply has a user configurable 30 V, 40 V, or 50 V AC under voltage lockout circuit. Default setting is 30 V. 40 V or 50 V AC under voltage lockout may be selected by changing the position of the lockout jumper.

Notes:

1. Reference output tilt is specified as “LINEAR” tilt (as opposed to “cable” tilt).
2. Forward Gain and Noise Figure measured with 0 dB input EQ and 1 dB input pad.
3. Down tilt, the effect of cable, is represented by a (-). Up tilt, the effect of cable equalization, is represented by a (+). Forward internal tilt specified is primarily due to an on board equalizer and a factory configured 10.5 dB plug-in interstage equalizer.
4. Loaded with 64 PAL B/G CW carriers from 112-600 MHz. Digital refers to 600-1002 MHz loading with QAM carriers at -6 dB relative to analog CW carrier levels.
5. X-mod (@ 15.75 kHz) specified using 100% synchronous modulation and frequency selective measurement device.
6. Reverse Gain and Noise Figure for station with 0 dB reverse input pad, 0 dB reverse output EQ, and 1 dB output pad.
7. Reverse Operational Gain, Noise Figure, and Return Loss are specified without reverse switch option. If switch is installed, reduce Gain by 0.5 dB, increase Noise Figure by 0.5 dB, and decrease Return Loss by 1 dB.
8. Measured and specified as Composite Beat.
9. Tested per CENELEC Standard EN50083-3, with reference output tilt. RF output level specified is at 1002 MHz (forward).
10. Loaded with 64 PAL I CW carriers from 88-600 MHz. Digital refers to 600-1002 MHz loading with QAM carriers at -6 dB relative to analog CW carrier levels.
11. Loaded with 78 NTSC CW carriers from 91-550 MHz. Digital refers to 550-1002 MHz loading with QAM carriers at -6 dB relative to analog CW carrier levels.

Environmental	
Operating Temperature Range	-40 to +140°F (-40 to +60°C)
Mechanical	
Housing Dimensions	17.3 in. L x 7.2 in. H x 7.8 in. D 439.4 mm L x 182.9 mm H x 198.1 mm D
Weight • Housing with power supply • Module	 12 lbs, 5 oz. (5.6 kg) 5 lbs, 5 oz. (2.4 kg)

Unless otherwise noted, specifications reflect typical performance and are referenced to 68°F (20°C). Specifications are based upon measurements made in accordance with SCTE/ANSI standards (where applicable), using standard frequency assignments.

GainMaker® - High Gain Dual - 5-65/86-1002 MHz

Ordering Information

The ***GainMaker Ordering Matrix*** provides ordering information for configured amplifier modules or stations. This page contains ordering information for required and optional accessories that are not included as part of a configured amplifier module or station. Consult your account representative or customer service representative for ordering assistance.

*The following **Required Accessories** must be ordered separately (not included via GainMaker Ordering Matrix):*

Required Accessories	Part Number
Plug-in Pads (attenuators) - Available in 0.5 dB steps from 0 to 20.5 dB • 1 required for forward input • 1 required for AGC, if applicable* • 4 required for reverse (3 input, 1 output) *To determine AGC pad value, subtract 34 dB from the design value main port RF output level at the AGC pilot frequency (applies to HGD, LGD, HGBT only)	589693 (0 dB) sequentially thru 589734 (20.5 dB)
Plug-in Forward Equalizer - Available in 1.5 dB steps from 0 to 30 dB at 1002 MHz • 1 required for forward input	4007228 (0 dB) sequentially thru 4007248 (30 dB)
Plug-in Reverse Equalizer – Available in 1 dB steps from 0 to 12 dB at 65 MHz • 1 required for reverse output - unless design value is 0 dB (0 dB EQ is provided)	712719 (0 dB) and 589736 (1 dB) sequentially thru 589747 (12 dB)
Plug-In Signal Director for Auxiliary output – 1 required, chose from below: • Jumper • 2-way Splitter • DC-8 Directional Coupler • DC-12 Directional Coupler	 4008208 4008364 4008365 4008366

*The following **Optional Accessories** may be ordered separately:*

Optional Accessories	Part Number
230 V AC Crowbar Surge Protector (plug-in, one per station)	715973
Plug-in Inverse Equalizer. Simulates cable equivalent tilts (creates tilt opposite that of equalizers). Use in place of forward input EQ as needed to maintain proper output tilt in short spaced locations. Available in approx. 1.6 dB "cable equivalent" steps from 1.6 to 16.2 dB.	4007486 (1.6 dB) sequentially thru 4007495 (16.2 dB)
Long Reach Test Point Adapter	562580
Status Monitoring Transponder – * see GainMaker Status Monitoring Transponder Data Sheet	*

*The following **Housing Options** may be included with the product if ordered using the GainMaker Ordering Matrix. They may also be ordered separately.*

GainMaker System Amplifier Housing – 1 required Housing includes housing base, lid, wiring harness, and 24 V power supply # 734771. All Housings have 15 amp capacity.	Part Number
• Uncoated 4 port housing *without* external test point access	714027
• Chromate Plated 4 port housing *without* external test point access	714026
• Uncoated 4 port housing *with* external test point access	714025
• Chromate Plated 4 port housing *with* external test point access	714024
GainMaker System Amplifier Housing Upgrade Kit - 1 required if upgrading an existing SA II, II+, or III housing to allow use of GainMaker System Amplifier modules. Includes a GainMaker System Amplifier housing lid, wiring harness, and 24 V power supply # 734771.	
• Uncoated 4 port housing lid *without* external test point access	714023
• Painted 4 port housing lid *without* external test point access	714022
• Uncoated 4 port housing lid *with* external test point access	714021
• Painted 4 port housing lid *with* external test point access	714020
Seizure Upgrade Kit – 1 required if upgrading an existing SAII or SAII+ housing base to allow use of GainMaker System Amplifier Modules. Includes high current (15 amp) rated seizure screws and anvils.	548775

Scientific-Atlanta, the Scientific-Atlanta logo, and GainMaker are registered trademarks of Scientific-Atlanta, Inc.
ROSA is a trademark of Scientific-Atlanta Europe NV.
Specifications and product availability are subject to change without notice.
© 2006 Scientific-Atlanta, Inc. All rights reserved.

Scientific-Atlanta, Inc.
1-800-722-2009 or 770-236-6900
www.scientificatlanta.com

Part Number 7006948 Rev A
February 2006